AUTHENTICATED
U.S. GOVERNMENT
INFORMATION
GPO

code of federal regulations

PARTS 72 TO 80

40

PARTS 72 TO 80

Revised as of July 1, 1997

CONTAINING
A CODIFICATION OF DOCUMENTS
OF GENERAL APPLICABILITY
AND FUTURE EFFECT

AS OF JULY 1, 1997

With Ancillaries

Published by
the Office of the Federal Register
National Archives and Records
Administration

as a Special Edition of
the Federal Register

U.S. GOVERNMENT PRINTING OFFICE
WASHINGTON : 1997

For sale by U.S. Government Printing Office
Superintendent of Documents, Mail Stop: SSOP, Washington, DC 20402–9328

Table of Contents

	Page
Explanation	v
Title 40:	
Chapter I—Environmental Protection Agency	3
Finding Aids:	
Material Approved for Incorporation by Reference	715
Table of CFR Titles and Chapters	721
Alphabetical List of Agencies Appearing in the CFR	737
Table of OMB Control Numbers	747
List of CFR Sections Affected	767

Cite this Code: CFR

To cite the regulations in this volume use title, part and section number. Thus, 40 CFR 72.1 *refers to title 40, part 72, section 1.*

Explanation

The Code of Federal Regulations is a codification of the general and permanent rules published in the Federal Register by the Executive departments and agencies of the Federal Government. The Code is divided into 50 titles which represent broad areas subject to Federal regulation. Each title is divided into chapters which usually bear the name of the issuing agency. Each chapter is further subdivided into parts covering specific regulatory areas.

Each volume of the Code is revised at least once each calendar year and issued on a quarterly basis approximately as follows:

Title 1 through Title 16.....as of January 1
Title 17 through Title 27.....as of April 1
Title 28 through Title 41.....as of July 1
Title 42 through Title 50.....as of October 1

The appropriate revision date is printed on the cover of each volume.

LEGAL STATUS

The contents of the Federal Register are required to be judicially noticed (44 U.S.C. 1507). The Code of Federal Regulations is prima facie evidence of the text of the original documents (44 U.S.C. 1510).

HOW TO USE THE CODE OF FEDERAL REGULATIONS

The Code of Federal Regulations is kept up to date by the individual issues of the Federal Register. These two publications must be used together to determine the latest version of any given rule.

To determine whether a Code volume has been amended since its revision date (in this case, July 1, 1997), consult the ''List of CFR Sections Affected (LSA),'' which is issued monthly, and the ''Cumulative List of Parts Affected,'' which appears in the Reader Aids section of the daily Federal Register. These two lists will identify the Federal Register page number of the latest amendment of any given rule.

EFFECTIVE AND EXPIRATION DATES

Each volume of the Code contains amendments published in the Federal Register since the last revision of that volume of the Code. Source citations for the regulations are referred to by volume number and page number of the Federal Register and date of publication. Publication dates and effective dates are usually not the same and care must be exercised by the user in determining the actual effective date. In instances where the effective date is beyond the cutoff date for the Code a note has been inserted to reflect the future effective date. In those instances where a regulation published in the Federal Register states a date certain for expiration, an appropriate note will be inserted following the text.

OMB CONTROL NUMBERS

The Paperwork Reduction Act of 1980 (Pub. L. 96–511) requires Federal agencies to display an OMB control number with their information collection request.

Many agencies have begun publishing numerous OMB control numbers as amendments to existing regulations in the CFR. These OMB numbers are placed as close as possible to the applicable recordkeeping or reporting requirements.

OBSOLETE PROVISIONS

Provisions that become obsolete before the revision date stated on the cover of each volume are not carried. Code users may find the text of provisions in effect on a given date in the past by using the appropriate numerical list of sections affected. For the period before January 1, 1986, consult either the List of CFR Sections Affected, 1949–1963, 1964–1972, or 1973–1985, published in seven separate volumes. For the period beginning January 1, 1986, a ''List of CFR Sections Affected'' is published at the end of each CFR volume.

INCORPORATION BY REFERENCE

What is incorporation by reference? Incorporation by reference was established by statute and allows Federal agencies to meet the requirement to publish regulations in the Federal Register by referring to materials already published elsewhere. For an incorporation to be valid, the Director of the Federal Register must approve it. The legal effect of incorporation by reference is that the material is treated as if it were published in full in the Federal Register (5 U.S.C. 552(a)). This material, like any other properly issued regulation, has the force of law.

What is a proper incorporation by reference? The Director of the Federal Register will approve an incorporation by reference only when the requirements of 1 CFR part 51 are met. Some of the elements on which approval is based are:

(a) The incorporation will substantially reduce the volume of material published in the Federal Register.

(b) The matter incorporated is in fact available to the extent necessary to afford fairness and uniformity in the administrative process.

(c) The incorporating document is drafted and submitted for publication in accordance with 1 CFR part 51.

Properly approved incorporations by reference in this volume are listed in the Finding Aids at the end of this volume.

What if the material incorporated by reference cannot be found? If you have any problem locating or obtaining a copy of material listed in the Finding Aids of this volume as an approved incorporation by reference, please contact the agency that issued the regulation containing that incorporation. If, after contacting the agency, you find the material is not available, please notify the Director of the Federal Register, National Archives and Records Administration, Washington DC 20408, or call (202) 523–4534.

CFR INDEXES AND TABULAR GUIDES

A subject index to the Code of Federal Regulations is contained in a separate volume, revised annually as of January 1, entitled CFR INDEX AND FINDING AIDS. This volume contains the Parallel Table of Statutory Authorities and Agency Rules (Table I), and Acts Requiring Publication in the Federal Register (Table II). A list of CFR titles, chapters, and parts and an alphabetical list of agencies publishing in the CFR are also included in this volume.

An index to the text of ''Title 3—The President'' is carried within that volume.

The Federal Register Index is issued monthly in cumulative form. This index is based on a consolidation of the ''Contents'' entries in the daily Federal Register.

A List of CFR Sections Affected (LSA) is published monthly, keyed to the revision dates of the 50 CFR titles.

REPUBLICATION OF MATERIAL

There are no restrictions on the republication of material appearing in the Code of Federal Regulations.

INQUIRIES

For a legal interpretation or explanation of any regulation in this volume, contact the issuing agency. The issuing agency's name appears at the top of odd–numbered pages.

For inquiries concerning CFR reference assistance, call 202–523–5227 or write to the Director, Office of the Federal Register, National Archives and Records Administration, Washington, DC 20408.

SALES

The Government Printing Office (GPO) processes all sales and distribution of the CFR. For payment by credit card, call 202–512–1800, M–F, 8 a.m. to 4 p.m. e.s.t. or fax your order to 202–512–2233, 24 hours a day. For payment by check, write to the Superintendent of Documents, Attn: New Orders, P.O. Box 371954, Pittsburgh, PA 15250–7954. For GPO Customer Service call 202–512–1803.

RAYMOND A. MOSLEY,
Director,
Office of the Federal Register.

July 1, 1997.

THIS TITLE

Title 40—PROTECTION OF ENVIRONMENT is composed of twenty-two volumes. The parts in these volumes are arranged in the following order: parts 1–49, parts 50–51; parts 52.01–52.1018, parts 52.1019–end, parts 53–59, part 60, parts 61–62, parts 63–71, parts 72–80, parts 81–85, part 86, parts 87–135, parts 136–149, parts 150–189, parts 190–259, parts 260–265, parts 266–299, parts 300–399, parts 400–424, parts 425–699, parts 700–789 and part 790 to end. The contents of these volumes represent all current regulations codified under this title of the CFR as of July 1, 1997.

Chapter I—Environmental Protection Agency appears in all twenty-two volumes. A Pesticide Tolerance Commodity/Chemical Index appears in parts 150–189. A Toxic Substances Chemical—CAS Number Index appears in parts 700–789 and part 790 to end. Redesignation Tables appear in the volumes containing parts 1–51, parts 150–189, and parts 700–789. Regulations issued by the Council on Environmental Quality appear in the volume containing part 790 to end.

The OMB control numbers for title 40 appear in §9.1 of this chapter. For the convenience of the user, §9.1 appears in the Finding Aids section of the volumes containing parts 52 to the end.

For this volume, Ruth Reedy Green was Chief Editor. The Code of Federal Regulations publication program is under the direction of Frances D. McDonald, assisted by Alomha S. Morris.

Would you like to know. . .

if any changes have been made to the *Code of Federal Regulations* or what documents have been published in the *Federal Register* without reading the *Federal Register* every day? If so, you may wish to subscribe to the *LSA* (List of CFR Sections Affected), the *Federal Register Index,* or both.

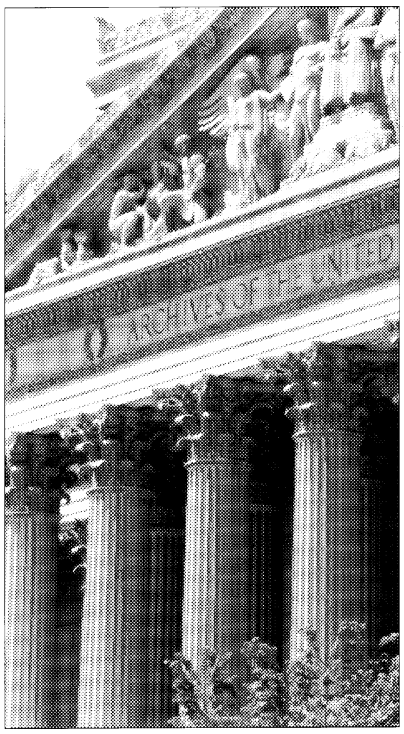

LSA

The *LSA* (List of CFR Sections Affected) is designed to lead users of the *Code of Federal Regulations* to amendatory actions published in the *Federal Register*. The *LSA* is issued monthly in cumulative form. Entries indicate the nature of the changes—such as revised, removed, or corrected.
$27 per year.

Federal Register Index

The index, covering the contents of the daily *Federal Register,* is issued monthly in cumulative form. Entries are carried primarily under the names of the issuing agencies. Significant subjects are carried as cross-references.
$25 per year.

A finding aid is included in each publication which lists *Federal Register* page numbers with the date of publication in the *Federal Register.*

Superintendent of Documents Subscription Order Form

Order Processing Code:
***5421**

❑ **YES,** send me the following indicated subscriptions for one year:

____ **LSA (List of CFR Sections Affected),** (LCS) for $27 per year.

____ **Federal Register Index** (FRSU) $25 per year.

The total cost of my order is $ _____
Price is subject to change. International customers please add 25%.

(Includes regular shipping and handling.)

For privacy check box below:

❑ Do not make my name available to other mailers

Check method of payment:

❑ Check payable to Superintendent of Documents

❑ GPO Deposit Account ☐☐☐☐☐☐☐ — ☐

❑ VISA ❑ MasterCard ☐☐☐☐ (expiration date)

Company or personal name

Street address

City, State, ZIP code

Daytime phone with area code

Purchase order No. (optional)

Credit card No. (must be 20 digits)

Thank you for your order!

Authorizing signature 1/97

Fax your orders (202) 512–2250
Phone your orders (202) 512–1800

Mail To: Superintendent of Documents
PO Box 371954
Pittsburgh PA 15250–7954

Title 40—Protection of Environment

(This book contains parts 72–80)

Part

CHAPTER I—Environmental Protection Agency (Continued) 72

CHAPTER I—ENVIRONMENTAL PROTECTION AGENCY (CONTINUED)

SUBCHAPTER C—AIR PROGRAMS (CONTINUED)

EDITORIAL NOTE: Subchapter C—Air Programs is continued in the volume containing 40 CFR parts 81-85.

Part		*Page*
72	Permits regulation	5
73	Sulphur dioxide allowance system	83
74	Sulfur dioxide opt-ins	180
75	Continuous emission monitoring	206
76	Acid rain nitrogen oxides emission reduction program	336
77	Excess emissions	362
78	Appeal procedures for Acid Rain Program	368
79	Registration of fuels and fuel additives	378
80	Regulation of fuels and fuel additives	474

SUBCHAPTER C—AIR PROGRAMS—(Continued)

PART 72—PERMITS REGULATION

Subpart A—Acid Rain Program General Provisions

Sec.
72.1 Purpose and scope.
72.2 Definitions.
72.3 Measurements, abbreviations, and acronyms.
72.4 Federal authority.
72.5 State authority.
72.6 Applicability.
72.7 New units exemption.
72.8 Retired units exemption.
72.9 Standard requirements.
72.10 Availability of information.
72.11 Computation of time.
72.12 Administrative appeals.
72.13 Incorporation by reference.

Subpart B—Designated Representative

72.20 Authorization and responsibilities of the designated representative.
72.21 Submissions.
72.22 Alternate designated representative.
72.23 Changing the designated representative, alternate designated representative; changes in the owners and operators.
72.24 Certificate of representation.
72.25 Objections.

Subpart C—Acid Rain Permit Applications

72.30 Requirement to apply.
72.31 Information requirements for Acid Rain permit applications.
72.32 Permit application shield and binding effect of permit application.
72.33 Identification of dispatch system.

Subpart D—Acid Rain Compliance Plan and Compliance Options

72.40 General.
72.41 Phase I substitution plans.
72.42 Phase I extension plans.
72.43 Phase I reduced utilization plans.
72.44 Phase II repowering extensions.

Subpart E—Acid Rain Permit Contents

72.50 General.
72.51 Permit shield.

Subpart F—Federal Acid Rain Permit Issuance Procedures

72.60 General.
72.61 Completeness.
72.62 Draft permit.
72.63 Administrative record.
72.64 Statement of basis.
72.65 Public notice of opportunities for public comment.
72.66 Public comments.
72.67 Opportunity for public hearing.
72.68 Response to comments.
72.69 Issuance and effective date of acid rain permits.

Subpart G—Acid Rain Phase II Implementation

72.70 Relationship to title V operating permit program.
72.71 Approval of state programs—general.
72.72 State permit program approval criteria.
72.73 State issuance of Phase II permits.
72.74 Federal issuance of Phase II permits.

Subpart H—Permit Revisions

72.80 General.
72.81 Permit modifications.
72.82 Fast-track modifications.
72.83 Administrative permit amendment.
72.84 Automatic permit amendment.
72.85 Permit reopenings.

Subpart I—Compliance Certification

72.90 Annual compliance certification report.
72.91 Phase I unit adjusted utilization.
72.92 Phase I unit allowance surrender.
72.93 Units with Phase I extension plans.
72.94 Units with repowering extension plans.
72.95 Allowance deduction formula.
72.96 Administrator's action on compliance certifications.
APPENDIX A TO PART 72—METHODOLOGY FOR ANNUALIZATION OF EMISSIONS LIMITS
APPENDIX B TO PART 72—METHODOLOGY FOR CONVERSION OF EMISSIONS LIMITS
APPENDIX C TO PART 72—ACTUAL 1985 YEARLY SO_2 EMISSIONS CALCULATION
APPENDIX D TO PART 72—CALCULATION OF POTENTIAL ELECTRIC OUTPUT CAPACITY

AUTHORITY: 42 U.S.C. 7601, 7651, et seq.

SOURCE: 58 FR 3650, Jan. 11, 1993, unless otherwise noted.

Subpart A—Acid Rain Program General Provisions

§ 72.1 Purpose and scope.

(a) *Purpose.* The purpose of this part is to establish certain general provisions and the operating permit program requirements for affected sources and affected units under the Acid Rain

Program, pursuant to title IV of the Clean Air Act, 42 U.S.C. 7401, *et seq.*, as amended by Public Law 101–549 (November 15, 1990).

(b) *Scope.* The regulations under this part set forth certain generally applicable provisions under the Acid Rain Program. The regulations also set forth requirements for obtaining three types of Acid Rain permits, during Phases I and II, for which an affected source may apply: Acid Rain permits issued by the United States Environmental Protection Agency during Phase I; the Acid Rain portion of an operating permit issued by a State permitting authority during Phase II; and the Acid Rain portion of an operating permit issued by EPA when it is the permitting authority during Phase II. The requirements under this part supplement, and in some cases modify, the requirements under part 70 of this chapter and other regulations implementing title V for approving and implementing State operating permit programs and for federal issuance of operating permits under title V, as such requirements apply to affected sources under the Acid Rain Program.

§ 72.2 Definitions.

The terms used in this part, in parts 73, 74, 75, 76, 77 and 78 of this chapter shall have the meanings set forth in the Act, including sections 302 and 402 of the Act, and in this section as follows:

Account number means the identification number given by the Administrator to each Allowance Tracking System account pursuant to § 73.31(d) of this chapter.

Acid Rain compliance option means one of the methods of compliance used by an affected unit under the Acid Rain Program as described in a compliance plan submitted and approved in accordance with subpart D of this part, part 74 of this chapter or part 76 of this chapter.

Acid Rain emissions limitation means:

(1) For the purposes of sulfur dioxide emissions:

(i) The tonnage equivalent of the allowances authorized to be allocated to an affected unit for use in a calendar year under section 404(a)(1) and (a)(3) of the Act, the basic Phase II allowance allocations authorized to be allocated to an affected unit for use in a calendar year, or the allowances authorized to be allocated to an opt-in source under section 410 of the Act for use in a calendar year;

(ii) As adjusted:

(A) By allowances allocated by the Administrator pursuant to section 403, section 405 (a)(2), (a)(3), (b)(2), (c)(4), (d)(3), and (h)(2), and section 406 of the Act;

(B) By allowances allocated by the Administrator pursuant to subpart D of this part; and thereafter

(C) By allowance transfers to or from the compliance subaccount for that unit that were recorded or properly submitted for recordation by the allowance transfer deadline as provided in § 73.35 of this chapter, after deductions and other adjustments are made pursuant to § 73.34(c) of this chapter; and

(2) For purposes of nitrogen oxides emissions, the applicable limitation established by regulations promulgated by the Administrator pursuant to section 407 of the Act, as modified by an Acid Rain permit application submitted to the permitting authority, and an Acid Rain permit issued by the permitting authority, in accordance with regulations implementing section 407 of the Act.

Acid Rain emissions reduction requirement means a requirement under the Acid Rain Program to reduce the emissions of sulfur dioxide or nitrogen oxides from a unit to a specified level or by a specified percentage.

Acid Rain permit or permit means the legally binding written document, or portion of such document, issued by a permitting authority under this part (following an opportunity for appeal pursuant to part 78 of this chapter or any State administrative appeals procedure), including any permit revisions, specifying the Acid Rain Program requirements applicable to an affected source, to each affected unit at an affected source, and to the owners and operators and the designated representative of the affected source or the affected unit.

Acid Rain Program means the national sulfur dioxide and nitrogen oxides air pollution control and emissions

reduction program established in accordance with title IV of the Act, this part, and parts 73, 74, 75, 76, 77, and 78 of this chapter.

Act means the Clean Air Act, 42 U.S.C. 7401, *et seq.* as amended by Public Law No. 101–549 (November 15, 1990).

Actual SO_2 emissions rate means the annual average sulfur dioxide emissions rate for the unit (expressed in lb/mmBtu), for the specified calendar year; *provided* that, if the unit is listed in the NADB, the ''1985 actual SO_2 emissions rate'' for the unit shall be the rate specified by the Administrator in the NADB under the data field ''SO2RTE.''

Add-on control means a pollution reduction control technology that operates independent of the combustion process.

Additional advance auction means the auction of advance allowances that were offered the previous year for sale in an advance sale.

Administrator means the Administrator of the United States Environmental Protection Agency or the Administrator's duly authorized representative.

Advance allowance means an allowance that may be used for purposes of compliance with a unit's Acid Rain sulfur dioxide emissions limitation requirements beginning no earlier than seven years following the year in which the allowance is first offered for sale.

Advance auction means an auction of advance allowances.

Advance sale means a sale of advance allowances.

Affected source means a source that includes one or more affected units.

Affected unit means a unit that is subject to any Acid Rain emissions reduction requirement or Acid Rain emissions limitation under § 72.6 or part 74 of this chapter.

Affiliate shall have the meaning set forth in section 2(a)(11) of the Public Utility Holding Company Act of 1935, 15 U.S.C. 79b(a)(11), as of November 15, 1990.

Allocate or allocation means the initial crediting of an allowance by the Administrator to an Allowance Tracking System unit account or general account.

Allowable SO_2 emissions rate means the most stringent federally enforceable emissions limitation for sulfur dioxide (in lb/mmBtu) applicable to the unit or combustion source for the specified calendar year, or for such subsequent year as determined by the Administrator where such a limitation does not exist for the specified year; provided that, if a Phase I or Phase II unit is listed in the NADB, the ''1985 allowable SO_2 emissions rate'' for the Phase I or Phase II unit shall be the rate specified by the Administrator in the NADB under the data field ''1985 annualized boiler SO_2 emission limit.''

Allowance means an authorization by the Administrator under the Acid Rain Program to emit up to one ton of sulfur dioxide during or after a specified calendar year.

Allowance deduction, or deduct when referring to allowances, means the permanent withdrawal of allowances by the Administrator from an Allowance Tracking System compliance subaccount, or future year subaccount, to account for the number of tons of SO_2 emissions from an affected unit for the calendar year, for tonnage emissions estimates calculated for periods of missing data as provided in part 75 of this chapter, or for any other allowance surrender obligations of the Acid Rain Program.

Allowances held or hold allowances means the allowances recorded by the Administrator, or submitted to the Administrator for recordation in accordance with § 73.50 of this chapter, in an Allowance Tracking System account.

Allowance reserve means any bank of allowances established by the Administrator in the Allowance Tracking System pursuant to sections 404(a)(2) (Phase I extension reserve), 404(g) (energy conservation and renewable energy reserve), or 416(b) (special allowance reserve) of the Act, and implemented in accordance with part 73, subpart B of this chapter.

Allowance Tracking System or ATS means the Acid Rain Program system by which the Administrator allocates, records, deducts, and tracks allowances.

Allowance Tracking System account means an account in the Allowance Tracking System established by the

Administrator for purposes of allocating, holding, transferring, and using allowances.

Allowance transfer deadline means midnight of January 30 or, if January 30 is not a business day, midnight of the first business day thereafter and is the deadline by which allowances may be submitted for recordation in an affected unit's compliance subaccount for the purposes of meeting the unit's Acid Rain emissions limitation requirements for sulfur dioxide for the previous calendar year.

Alternative monitoring system means a system or a component of a system designed to provide direct or indirect data of mass emissions per time period, pollutant concentrations, or volumetric flow, that is demonstrated to the Administrator as having the same precision, reliability, accessibility, and timeliness as the data provided by a certified CEMS or certified CEMS component in accordance with part 75 of this chapter.

As-fired means the taking of a fuel sample just prior to its introduction into the unit for combustion.

Auction subaccount means a subaccount in the Special Allowance Reserve, as specified in section 416(b) of the Act, which contains allowances to be sold at auction in the amount of 150,000 per year from calendar year 1995 through 1999, inclusive, and 200,000 per year for each year begnning in calendar year 2000, subject to the adjustments noted in the regulations in part 73, subpart E of this chapter.

Authorized account representative means a responsible natural person who is authorized, in accordance with part 73 of this chapter, to transfer and otherwise dispose of allowances held in an Allowance Tracking System general account; or, in the case of a unit account, the designated representative of the owners and operators of the affected unit.

Automated data acquisition and handling system means that component of the CEMS, COMS, or other emissions monitoring system approved by the Administrator for use in the Acid Rain Program, designed to interpret and convert individual output signals from pollutant concentration monitors, flow monitors, diluent gas monitors, opacity monitors, and other component parts of the monitoring system to produce a continuous record of the measured parameters in the measurement units required by part 75 of this chapter.

Award means the conditional set-aside by the Administrator, based on the submission of an early ranking application pursuant to subpart D of this part, of an allowance from the Phase I extension reserve, for possible future allocation to a Phase I extension applicant's Allowance Tracking System unit account.

Backup fuel means a fuel for a unit where: (1) For purposes of the requirements of the monitoring exception of appendix E of part 75 of this chapter, the fuel provides less than 10.0 percent of the heat input to a unit during the three calendar years prior to certification testing for the primary fuel and the fuel provides less than 15.0 percent of the heat input to a unit in each of those three calendar years; or the Administrator approves the fuel as a backup fuel; and (2) For all other purposes under the Acid Rain Program, a fuel that is not the primary fuel (expressed in mmBtu) consumed by an affected unit for the applicable calendar year.

Baseline means the annual average quantity of fossil fuel consumed by a unit, measured in millions of British Thermal Units (expressed in mmBtu) for calendar years 1985 through 1987; *provided* that in the event that a unit is listed in the NADB, the baseline will be calculated for each unit-generator pair that includes the unit, and the unit's baseline will be the sum of such unit-generator baselines. The unit-generator baseline will be as provided in the NADB under the data field ''BASE8587'', as adjusted by the outage hours listed in the NADB under the data field ''OUTAGEHR'' in accordance with the following equation:

$$\text{Baseline}=\text{BASE8587}\times\{26280/(26280-\text{OUTAGEHR})\}\times\{36/(36-\text{months not on line})\}\times 10^{6}$$

''Months not on line'' is the number of months during January 1985 through December 1987 prior to the commencement of firing for units that commenced firing in that period, i.e., the number of months, in that period, prior

to the on-line month listed under the data field ''BLRMNONL'' and the on-line year listed in the data field ''BLRYRONL'' in the NADB.

Basic Phase II allowance allocations means:

(1) For calendar years 2000 through 2009 inclusive, allocations of allowances made by the Administrator pursuant to section 403 and section 405 (b)(1), (3), and (4); (c)(1), (2), (3), and (5); (d)(1), (2), (4), and (5); (e); (f); (g)(1), (2), (3), (4), and (5); (h)(1); (i); and (j).

(2) For each calendar year beginning in 2010, allocations of allowances made by the Administrator pursuant to section 403 and section 405 (b)(1), (3), and (4); (c)(1), (2), (3), and (5); (d)(1), (2), (4), and (5); (e); (f); (g)(1), (2), (3), (4), and (5); (h)(1) and (3); (i); and (j).

Bias means systematic error, resulting in measurements that will be either consistently low or high relative to the reference value.

Boiler means an enclosed fossil or other fuel-fired combustion device used to produce heat and to transfer heat to recirculating water, steam, or any other medium.

Bypass operating quarter means a calendar quarter during which emissions pass through a stack, duct or flue that bypasses add-on emission controls.

By-pass stack means any duct, stack, or conduit through which emissions from an affected unit may or do pass to the atmosphere, which either augments or substitutes for the principal stack exhaust system or ductwork during any portion of the unit's operation.

Calibration error means the difference between:

(1) The response of gaseous monitor to a calibration gas and the known concentration of the calibration gas;

(2) The response of a flow monitor to a reference signal and the known value of the reference signal; or

(3) The response of a continuous opacity monitoring system to an attenuation filter and the known value of the filter after a stated period of operation during which no unscheduled maintenance, repair, or adjustment took place.

Calibration gas means: (1) a standard reference material; (2) a NIST traceable reference material; (3) a Protocol 1 gas; (4) a research gas material; or (5) zero air material.

Capacity factor means either: (1) the ratio of a unit's actual annual electric output (expressed in MWe-hr) to the unit's nameplate capacity times 8760 hours, or (2) the ratio of a unit's annual heat input (in million British thermal units or equivalent units of measure) to the unit's maximum design heat input (in million British thermal units per hour or equivalent units of measure) times 8,760 hours.

CEMS precision or precision as applied to the monitoring requirements of part 75 of this chapter, means the closeness of a measurement to the actual measured value expressed as the uncertainty associated with repeated measurements of the same sample or of different samples from the same process (e.g., the random error associated with simultaneous measurements of a process made by more than one instrument). A measurement technique is determined to have increasing ''precision'' as the variation among the repeated measurements decreases.

Centroidal area means a representational concentric area that is geometrically similar to the stack or duct cross section, and is not greater than 1 percent of the stack or duct cross-sectional area.

Certificate of representation means the completed and signed submission required by § 72.20, for certifying the appointment of a designated representative for an affected source or a group of identified affected sources authorized to represent the owners and operators of such source(s) and of the affected units at such source(s) with regard to matters under the Acid Rain Program.

Certifying official, for purposes of part 73 of this chapter, means:

(1) For a corporation, a president, secretary, treasurer, or vice-president of the corporation in charge of a principal business function, or any other person who performs similar policy or decision-making functions for the corporation;

(2) For partnership or sole proprietorship, a general partner or the proprietor, respectively; and

(3) For a local government entity or State, federal, or other public agency,

either a principal executive officer or ranking elected official.

Coal means all solid fuels classified as anthracite, bituminous, subbituminous, or lignite by the American Society for Testing and Materials Designation ASTM D388–92 ''Standard Classification of Coals by Rank'' (as incorporated by reference in § 72.13).

Coal-derived fuel means any fuel, whether in a solid, liquid, or gaseous state, produced by the mechanical, thermal, or chemical processing of coal (e.g., pulverized coal, coal refuse, liquified or gasified coal, washed coal, chemically cleaned coal, coal-oil mixtures, and coke).

Coal-fired means the combustion of fuel consisting of coal or any coal-derived fuel (except a coal-derived gaseous fuel with a sulfur content no greater than natural gas), alone or in combination with any other fuel, where:

(1) For purposes of the requirements of part 75 of this chapter, a unit is ''coal-fired'' independent of the percentage of coal or coal-derived fuel consumed in any calendar year (expressed in mmBtu); and

(2) For all other purposes under the Acid Rain Program (including for calculating allowance allocations pursuant to part 73 of this chapter and applicability of the requirements of section 407 of the Act), a unit is ''coal-fired'' if it uses coal or coal-derived fuel as its primary fuel (expressed in mmBtu); *provided* that, if the unit is listed in the NADB, the primary fuel is the fuel listed in the NADB under the data field ''PRIMFUEL''.

Cogeneration unit means a unit that has equipment used to produce electric energy and forms of useful thermal energy (such as heat or steam) for industrial, commercial, heating or cooling purposes, through the sequential use of energy.

Combustion source means a stationary fossil fuel fired boiler, turbine, or internal combustion engine that has submitted or intends to submit an opt-in permit application under § 74.14 of this chapter to enter the Opt-in Program.

Commence commercial operation means to have begun to generate electricity for sale, including the sale of test generation.

Commence construction means that an owner or operator has either undertaken a continuous program of construction or has entered into a contractual obligation to undertake and complete, within a reasonable time, a continuous program of construction.

Commence operation means to have begun any mechanical, chemical, or electronic process, including start-up of an emissions control technology or emissions monitor or of a unit's combustion chamber.

Common stack means the exhaust of emissions from two or more units through a single flue.

Compensating unit means an affected unit that is not otherwise subject to Acid Rain emissions limitation or Acid Rain emissions reduction requirements during Phase I and that is designated as a Phase I unit in a reduced utilization plan under § 72.43; provided that an opt-in source shall not be a compensating unit.

Compliance certification means a submission to the Administrator or permitting authority, as appropriate, that is required by this part, by part 73, 74, 75, 76, 77, or 78 of this chapter, to report an affected source or an affected unit's compliance or non-compliance with a provision of the Acid Rain Program and that is signed and verified by the designated representative in accordance with subparts B and I of this part and the Acid Rain Program regulations generally.

Compliance plan, for the purposes of the Acid Rain Program, means the document submitted for an affected source in accordance with subpart C of this part or subpart E of part 74 of this chapter, or part 76 of this chapter, specifying the method(s) (including one or more Acid Rain compliance options as provided under subpart D of this part or subpart E of part 74 of this chapter, or part 76 of this chapter by which each affected unit at the source will meet the applicable Acid Rain emissions limitation and Acid Rain emissions reduction requirements.

Compliance subaccount means the subaccount in an affected unit's Allowance Tracking System account, established pursuant to § 73.31 (a) or (b) of this chapter, in which are held, from the date that allowances for the current

calendar year are recorded under § 73.34(a) until December 31, allowances available for use by the unit in the current calendar year and, after December 31 until the date that deductions are made under § 73.35(b), allowances available for use by the unit in the preceding calendar year, for the purpose of meeting the unit's Acid Rain emissions limitation for sulfur dioxide.

Compliance use date means the first calendar year for which an allowance may be used for purposes of meeting a unit's Acid Rain emissions limitation for sulfur dioxide.

Conservation Verification Protocol means a methodology developed by the Administrator for calculating the kilowatt hour savings from energy conservation measures and improved unit efficiency measures for the purposes of title IV of the Act.

Construction means fabrication, erection, or installation of a unit or any portion of a unit.

Consumer Price Index or CPI means, for purposes of the Acid Rain Program, the U.S. Department of Labor, Bureau of Labor Statistics unadjusted Consumer Price Index for All Urban Consumers for the U.S. city average, for All Items on the latest reference base, or if such index is no longer published, such other index as the Administrator in his or her discretion determines meets the requirements of the Clean Air Act Amendments of 1990.

(1) *CPI (1990)* means the CPI for all urban consumers for the month of August 1989. The ''CPI (1990)'' is 124.6 (with 1982–1984=100). Beginning in the month for which a new reference base is established, ''CPI (1990)'' will be the CPI value for August 1989 on the new reference base.

(2) *CPI (year)* means the CPI for all urban consumers for the month of August of the previous year.

Continuous emission monitoring system or CEMS means the equipment required by part 75 of this chapter used to sample, analyze, measure, and provide, by readings taken at least once every 15 minutes, a permanent record of emissions, expressed in pounds per hour (lb/hr) for sulfur dioxide and in pounds per million British thermal units (lb/mmBtu) for nitrogen oxides. The following systems are component parts included in a continuous emission monitoring system:

(1) Sulfur dioxide pollutant concentration monitor;

(2) Flow monitor;

(3) Nitrogen oxides pollutant concentration monitors;

(4) Diluent gas monitor (oxygen or carbon dioxide);

(5) A continuous moisture monitor when such monitoring is required by part 75 of this chapter; and

(6) A data acquisition and handling system.

Continuous opacity monitoring system or COMS means the equipment required by part 75 of this chapter to sample, measure, analyze, and provide, with readings taken at least once every 6 minutes, a permanent record of opacity or transmittance. The following systems are component parts included in a continuous opacity monitoring system:

(1) Opacity monitor; and

(2) A data acquisition and handling system.

Control unit means a unit employing a qualifying Phase I technology in accordance with a Phase I extension plan under § 72.42.

Current year subaccount means the subaccount in an Allowance Tracking System general account, established pursuant to § 73.31(c) of this chapter, in which are held allowances that may be transferred to a unit's compliance subaccount for use by the unit for the purpose of meeting its Acid Rain sulfur dioxide emissions limitation.

Customer means a purchaser of electricity not for purposes of transmission or resale.

Decisional body means any EPA employee who is or may reasonably be expected to act in a decision-making role in a proceeding under part 78 of this chapter, including the Administrator, a member of the Environmental Appeals Board, and a Presiding Officer, and any staff of any such person who are participating in the decisional process.

Demand-side measure means a measure:

(1) To improve the efficiency of consumption of electricity from a utility by customers of the utility; or

(2) To reduce the amount of consumption of electricity from a utility by

customers of the utility without increasing the use by the customer of fuel other than: Biomass (i.e., combustible energy-producing materials from biological sources, which include wood, plant residues, biological wastes, landfill gas, energy crops, and eligible components of municipal solid waste), solar, geothermal, or wind resources; or industrial waste gases where the party making the submission involved certifies that there is no net increase in sulfur dioxide emissions from the use of such gases. ''Demand-side measure'' includes the measures listed in part 73, appendix A, section 1 of this chapter.

Designated representative means a responsible natural person authorized by the owners and operators of an affected source and of all affected units at the source or by the owners and operators of a combustion source or process source, as evidenced by a certificate of representation submitted in accordance with subpart B of this part, to represent and legally bind each owner and operator, as a matter of federal law, in matters pertaining to the Acid Rain Program. Whenever the term ''responsible official'' is used in part 70 of this chapter, in any other regulations implementing title V of the Act, or in a State operating permit program, it shall be deemed to refer to the ''designated representative'' with regard to all matters under the Acid Rain Program.

Desulfurization refers to various procedures whereby sulfur is removed from petroleum during or apart from the refining process. ''Desulfurization'' does not include such processes as dilution or blending of low sulfur content diesel fuel with high sulfur content diesel fuel from a diesel refinery not eligible under 40 CFR part 73, subpart G.

Diesel-fired unit means, for the purposes of part 75 of this chapter, an oil-fired unit that combusts diesel fuel as its fuel oil, where the supplementary fuel, if any, shall be limited to natural gas or gaseous fuels containing no more sulfur than natural gas.

Diesel fuel means a low sulfur fuel oil of grades 1–D or 2–D, as defined by the American Society for Testing and Materials standard ASTM D975–91, ''Standard Specification for Diesel Fuel Oils,'' grades 1–GT or 2–GT, as defined by ASTM D2880–90a, ''Standard Specification for Gas Turbine Fuel Oils,'' or grades 1 or 2, as defined by ASTM D396–90, ''Standard Specification for Fuel Oils'' (incorporated by reference in § 72.13).

Diesel reciprocating engine unit means an internal combustion engine that combusts only diesel fuel and that thereby generates electricity through the operation of pistons, rather than by heating steam or water.

Diluent gas means a major gaseous constituent in a gaseous pollutant mixture, which in the case of emissions from fossil fuel-fired units are carbon dioxide and oxygen.

Diluent gas monitor means that component of the continuous emission monitoring system that measures the diluent gas concentration in a unit's flue gas.

Direct public utility ownership means direct ownership of equipment and facilities by one or more corporations, the principal business of which is sale of electricity to the public at retail. Percentage ownership of such equipment and facilities shall be measured on the basis of book value.

Direct Sale Subaccount means a subaccount in the Special Allowance Reserve, as specified in section 416(b) of the Act, which contains Phase II allowances to be sold in the amount of 25,000 per year, from calendar year 1993 to 1999, inclusive, and of 50,000 per year for each year beginning in calendar year 2000, subject to the adjustments noted in the regulations at part 73, subpart E of this chapter.

Dispatch means the assignment within a dispatch system of generating levels to specific units and generators to effect the reliable and economical supply of electricity, as customer demand rises or falls, and includes:

(1) The operation of high-voltage lines, substations, and related equipment; and

(2) The scheduling of generation for the purpose of supplying electricity to other utilities over interconnecting transmission lines.

Dispatch system means either:

(1) A specified unit and generator or specified group of units, and portions of

units, and generators that are interconnected and centrally dispatched, *provided* that the requirements of § 72.33 are met; or

(2) In the event the requirements specified in paragraph (1) of this definition are not met, the unit and generator or group of units and generators that make up one utility system.

Draft Acid Rain permit or draft permit means the version of the Acid Rain permit, or the Acid Rain portion of an operating permit, that a permitting authority offers for public comment.

Dual-fuel reciprocating engine unit means an internal combustion engine that combusts any combination of natural gas and diesel fuel and that thereby generates electricity through the operation of pistons, rather than by heating steam or water.

Emergency fuel means either:

(1) For purposes of the requirements for a fuel flowmeter used in an excepted monitoring system under appendix D or E of part 75 of this chapter, the fuel identified by the designated representative in the unit's monitoring plan as the fuel which is combusted only during emergencies where the primary fuel is not available; or

(2) For purposes of the requirement for stack testing for an excepted monitoring system under appendix E of part 75 of this chapter, the fuel identified in the State, local, or Federal permit for a plant and is identified by the designated representative in the unit's monitoring plan as the fuel which is combusted only during emergencies where the primary fuel is not available, as established in a petition under § 75.66 of this chapter.

Emissions means air pollutants exhausted from a unit or source into the atmosphere, as measured, recorded, and reported to the Administrator by the designated representative and as determined by the Administrator, in accordance with the emissions monitoring requirements of part 75 of this chapter.

Environmental Appeals Board means the three-member board established pursuant to § 1.25(e) of this chapter and authorized to hear appeals pursuant to part 78 of this chapter.

EPA means the United States Environmental Protection Agency.

EPA trial staff means an employee of EPA, whether temporary or permanent, who has been designated by the Administrator to investigate, litigate, and present evidence, arguments, and positions of EPA in any evidentiary hearing under part 78 of this chapter. Any EPA or permitting authority employee, consultant, or contractor who is called as a witness in the evidentiary hearing by EPA trial staff shall be deemed to be ''EPA trial staff''.

Equivalent diameter means a value, calculated using the equation in paragraph 2.1 of Method 1 in part 60, Appendix A of this chapter, and used to determine the upstream and downstream distances for locating CEMS or CEMS components in flues or stacks with rectangular cross sections.

Ex parte communication means any communication, written or oral, relating to the merits of an adjudicatory proceeding under part 78 of this chapter, that was not originally included or stated in the administrative record, in a pleading, or in an evidentiary hearing or oral argument under part 78 of this chapter, between the decisional body and any interested person outside EPA or any EPA trial staff. Ex parte communication shall not include:

(1) Communication between EPA employees other than between EPA trial staff and a member of the decisional body; or

(2) Communication between the decisional body and interested persons outside the Agency, or EPA trial staff, where all parties to the proceeding have received prior written notice of the proposed communication and are given an opportunity to be present and to participate therein.

Excepted monitoring system means a monitoring system that follows the procedures and requirements of appendix D or E of part 75 of this chapter for approved exceptions to the use of continuous emission monitoring systems.

Excess emissions means:

(1) Any tonnage of sulfur dioxide emitted by an affected unit during a calendar year that exceeds the Acid Rain emissions limitation for sulfur dioxide for the unit; and

(2) Any tonnage of nitrogen oxide emitted by an affected unit during a calendar year that exceeds the annual

tonnage equivalent of the Acid Rain emissions limitation for nitrogen oxides applicable to the affected unit taking into account the unit's heat input for the year.

Existing unit means a unit (including a unit subject to section 111 of the Act) that commenced commercial operation before November 15, 1990 and that on or after November 15, 1990 served a generator with nameplate capacity of greater than 25 MWe. ''Existing unit'' does not include simple combustion turbines or any unit that on or after November 15, 1990 served only generators with a nameplate capacity of 25 MWe or less. Any ''existing unit'' that is modified, reconstructed, or repowered after November 15, 1990 shall continue to be an ''existing unit.''

Facility means any institutional, commercial, or industrial structure, installation, plant, source, or building.

File means to send or transmit a document, information, or correspondence to the official custody of the person specified to take possession in accordance with the applicable regulation. Compliance with any ''filing'' deadline shall be determined by the date that person receives the document, information, or correspondence.

Flow meter accuracy means the closeness of the measurement made by a flow meter to the reference value of the fuel flow being measured, expressed as the difference between the measurement and the reference value.

Flow monitor means a component of the continuous emission monitoring system that measures the volumetric flow of exhaust gas.

Flue means a conduit or duct through which gases or other matter are exhausted to the atmosphere.

Flue gas desulfurization system means a type of add-on emission control used to remove sulfur dioxide from flue gas, commonly referred to as a ''scrubber.''

Forced outage means the removal of a unit from service due to an unplanned component failure or other unplanned condition that requires such removal immediately or within 7 days from the onset of the unplanned component failure or condition. For purposes of §§ 72.43, 72.91, and 72.92, ''forced outage'' also includes a partial reduction in the heat input or electrical output due to an unplanned component failure or other unplanned condition that requires such reduction immediately or within 7 days from the onset of the unplanned component failure or condition.

Fossil fuel means natural gas, petroleum, coal, or any form of solid, liquid, or gaseous fuel derived from such material.

Fossil fuel-fired means the combustion of fossil fuel or any derivative of fossil fuel, alone or in combination with any other fuel, independent of the percentage of fossil fuel consumed in any calendar year (expressed in mmBtu).

Fuel oil means any petroleum-based fuel (including diesel fuel or petroleum derivatives such as oil tar) as defined by the American Society for Testing and Materials in ASTM D396–90a, ''Standard Specification for Fuel Oils'' (incorporated by reference in § 72.13), and any recycled or blended petroleum products or petroleum by-products used as a fuel whether in a liquid, solid or gaseous state; *provided* that for purposes of the monitoring requirements of part 75 of this chapter, ''fuel oil'' shall be limited to the petroleum-based fuels for which applicable ASTM methods are specified in Appendices D, E, or F of part 75 of this chapter.

Fuel supply agreement means a legally binding agreement between a new IPP or a firm associated with a new IPP and a fuel supplier that establishes the terms and conditions under which the fuel supplier commits to provide fuel to be delivered to the new IPP.

Future year subaccount means a subaccount in an Allowance Tracking System account, established by the Administrator pursuant to § 73.31 of this chapter, in which allowances are held for one of the 30 years following the later of 1995 or a current calendar year following 1995.

Gas-fired means:

(1) The combustion of:

(i) Natural gas or other gaseous fuel (including coal-derived gaseous fuel), for at least 90.0 percent of the unit's average annual heat input during the previous three calendar years and for at least 85.0 percent of the annual heat input in each of those calendar years; and

(ii) Any fuel other than coal or coal-derived fuel (other than coal-derived gaseous fuel) for the remaining heat input, if any; *provided* that for purposes of part 75 of this chapter, any fuel used other than natural gas, shall be limited to:

(A) Gaseous fuels containing no more sulfur than natural gas; or

(B) Fuel oil.

(2) For purposes of part 75 of this chapter, a unit may initially qualify as gas-fired under the following circumstances:

(i) If the designated representative provides fuel usage data for the unit for the three calendar years immediately prior to submission of the monitoring plan, and if the unit's fuel usage is projected to change on or before January 1, 1995, the designated representative submits a demonstration satisfactory to the Administrator that the unit will qualify as gas-fired under the first sentence of this definition using the years 1995 through 1997 as the three calendar year period; or

(ii) If a unit does not have fuel usage data for one or more of the three calendar years immediately prior to submission of the monitoring plan, the designated representative submits:

(A) The unit's designed fuel usage;

(B) Any fuel usage data, beginning with the unit's first calendar year of commercial operation following 1992;

(C) The unit's projected fuel usage for any remaining future period needed to provide fuel usage data for three consecutive calendar years; and

(D) Demonstration satisfactory to the Administrator that the unit will qualify as gas-fired under the first sentence of this definition using those three consecutive calendar years as the three calendar year period.

Gaseous fuel means a material that is in the gaseous state at standard atmospheric temperature and pressure conditions and that is combusted to produce heat.

General account means an Allowance Tracking System account that is not a unit account.

Generator means a device that produces electricity and was or would have been required to be reported as a generating unit pursuant to the United States Department of Energy Form 860 (1990 edition).

Generator Output capacity means the full-load continuous rating of a generator under specific conditions as designed by the manufacturer.

Hearing clerk means an EPA employee designated by the Administrator to establish a repository for all books, records, documents, and other materials relating to proceedings under part 78 of this chapter.

Heat input means the product (expressed in mmBtu/time) of the gross calorific value of the fuel (expressed in Btu/lb) and the fuel feed rate into the combustion device (expressed in mass of fuel/time) and does not include the heat derived from preheated combustion air, recirculated flue gases, or exhaust from other sources.

Hour before and after means, for purposes of the missing data substitution procedures of part 75 of this chapter, the quality-assured hourly SO_2 or CO_2 concentration, hourly flow rate, or hourly NO_X emission rate recorded by a certified monitor during the unit operating hour immediately before and the unit operating hour immediately after a missing data period.

Hybrid generation facility means a plant that generates electrical energy derived from a combination of qualified renewable energy (wind, solar, biomass, or geothermal) and one or more other energy resources.

Independent auditor means a professional engineer who is not an employee or agent of the source being audited.

Independent Power Production Facility (IPP) means a source that:

(1) Is nonrecourse project financed, as defined by the Secretary of Energy at 10 CFR part 715;

(2) Is used for the generation of electricity, eighty percent or more of which is sold at wholesale; and

(3) Is a new unit required to hold allowances under Title IV of the Clean Air Act; but only if direct public utility ownership of the equipment comprising the facility does not exceed 50 percent.

Interested person means any person who submitted written comments or testified at a public hearing on the draft permit or other matter subject to notice and comment under the Acid

Rain Program or any person who submitted his or her name to the Administrator or the permitting authority, as appropriate, to be placed on a list of persons interested in such matter. The Administrator or the permitting authority may update the list of interested persons from time to time by requesting additional written indication of continued interest from the persons listed and may delete from the list the name of any person failing to respond as requested.

Investor-owned utility means a utility that is organized as a tax-paying for-profit business.

Kilowatthour saved or *savings* means the net savings in electricity use (expressed in Kwh) that result directly from a utility's energy conservation measures or programs.

Least-cost plan or *least-cost planning process* means an energy conservation and electric power planning methodology meeting the requirements of § 73.82(a)(4) of this chapter.

Life-of-the-unit, firm power contractual arrangement means a unit participation power sales agreement under which a utility or industrial customer reserves, or is entitled to receive, a specified amount or percentage of nameplate capacity and associated energy generated by any specified generating unit and pays its proportional amount of such unit's total costs, pursuant to a contract:

(1) For the life of the unit;

(2) For a cumulative term of no less than 30 years, including contracts that permit an election for early termination; or

(3) For a period equal to or greater than 25 years or 70 percent of the economic useful life of the unit determined as of the time the unit was built, with option rights to purchase or release some portion of the nameplate capacity and associated energy generated by the unit at the end of the period.

Mail or serve by mail means to submit or serve by means other than personal service.

Maximum potential NO_X emission rate means the emission rate of nitrogen oxides (in lb/mmBtu) calculated in accordance with section 3 of appendix F of part 75 of this chapter, using the maximum potential nitrogen oxides concentration as defined in section 2 of appendix A of part 75 of this chapter, and either the maximum oxygen concentration (in percent O_2) or the minimum carbon dioxide concentration (in percent CO_2) under all operating conditions of the unit except for unit start-up, shutdown, and upsets.

Missing data period means the total number of consecutive hours during which any component part of a certified CEMS or approved alternative monitoring system is not providing quality-assured data, regardless of the reason.

Monitor accuracy means the closeness of the measurement made by a CEMS or by one of its component parts to the reference value of the emissions or volumetric flow being measured, expressed as the difference between the measurement and the reference value.

Monitor operating hour means any unit operating hour or portion thereof over which a CEMS, or other monitoring system approved by the Administrator under part 75 of this chapter is operating, regardless of the number of measurements (i.e., data points) collected during the hour or portion of an hour.

Most stringent federally enforceable emissions limitation means the most stringent emissions limitation for a given pollutant applicable to the unit, which has been approved by the Administrator under the Act, whether in a State implementation plan approved pursuant to title I of the Act, a new source performance standard, or otherwise. To determine the most stringent emissions limitation for sulfur dioxide, each limitation shall be converted to lbs/mmBtu, using the appropriate conversion factors in appendix B of this part; *provided* that for determining the most stringent emissions limitation for sulfur dioxide for 1985, each limitation shall also be annualized, using the appropriate annualization factors in appendix A of this part.

Multi-header generator means a generator served by ductwork from more than one unit.

Multi-header unit means a unit with ductwork serving more than one generator.

Nameplate capacity means the maximum electrical generating output (expressed in MWe) that a generator can sustain over a specified period of time when not restricted by seasonal or other deratings, as listed in the NADB under the data field ''NAMECAP'' if the generator is listed in the NADB or as measured in accordance with the United States Department of Energy standards if the generator is not listed in the NADB.

National Allowance Data Base or *NADB* means the data base established by the Administrator under section 402(4)(C) of the Act.

Natural gas means a naturally occurring fluid mixture of hydrocarbons (e.g., methane, ethane, or propane) containing 1 grain or less hydrogen sulfide per 100 standard cubic feet, and 20 grains or less total sulfur per 100 standard cubic feet), produced in geological formations beneath the Earth's surface, and maintaining a gaseous state at standard atmospheric temperature and pressure under ordinary conditions.

NERC region means the North American Electric Reliability Council region or, if any, subregion.

Net income neutrality means, in the case of energy conservation measures undertaken by an investor-owned utility whose rates are regulated by a State utility regulatory authority, rates and charges established by the State utility regulatory authority that ensure that the net income earned by the utility on its State-jurisdictional equity investment will be *no lower* as a consequence of its expenditures on cost-effective qualified energy conservation measures and any associated lost sales than it would have been had the utility not made such expenditures, or that the State utility regulatory authority has implemented a ratemaking approach designed to meet this objective.

New independent power production facility or *new IPP* means a unit that:

(1) Commences commercial operation on or after November 15, 1990;

(2) Is nonrecourse project-financed, as defined in 10 CFR part 715;

(3) Sells 80% of electricity generated at wholesale; and

(4) Does not sell electricity to any affiliate or, if it does, demonstrates it cannot obtain the required allowances from such an affiliate.

New unit means a unit that commences commercial operation on or after November 15, 1990, including any such unit that serves a generator with a nameplate capacity of 25 MWe or less or that is a simple combustion turbine.

Ninetieth (90th) percentile means a value that would divide an ordered set of increasing values so that at least 90 percent are less than or equal to the value and at least 10 percent are greater than or equal to the value.

Ninety-fifth (95th) percentile means a value that would divide an ordered set of increasing values so that at least 95 percent of the set are less than or equal to the value and at least 5 percent are greater than or equal to the value.

NIST/EPA-approved certified reference material or NIST/EPA-approved CRM means a calibration gas mixture that has been approved by EPA and the National Institutes of Standards and Technologies (NIST) as having specific known chemical or physical property values certified by a technically valid procedure as evidenced by a certificate or other documentation issued by a certifying standard-setting body.

NIST traceable reference material (NTRM) means a calibration gas mixture tested by and certified by the National Institutes of Standards and Technologies (NIST) to have a certain specified concentration of gases. NTRMs may have different concentrations from those of standard reference materials.

Offset plan means a plan pursuant to part 77 of this chapter for offsetting excess emissions of sulfur dioxide that have occurred at an affected unit in any calendar year.

Oil-fired means:

(1) The combustion of:

(i) Fuel oil for more than 10.0 percent of the average annual heat input during the previous three calendar years or for more than 15.0 percent of the annual heat input during any one of those calendar years; and

(ii) Any solid, liquid, or gaseous fuel (including coal-derived gaseous fuel), other than coal or any other coal derived fuel, for the remaining heat

input, if any; provided that for purposes of part 75 of this chapter, any fuel used other than fuel oil shall be limited to gaseous fuels containing no more sulfur than natural gas.

(2) For purposes of part 75 of this chapter, a unit that does not have fuel usage data for one or more of the three calendar years immediately prior to submission of the monitoring plan may initially qualify as oil-fired under the following circumstances: the designated representative submits:

(i) Unit design fuel usage,

(ii) The unit's designed fuel usage,

(iii) Any fuel usage data, beginning with the unit's first calendar year of commercial operation following 1992,

(iv) The unit's projected fuel usage for any remaining future period needed to provide fuel usage data for three consecutive calendar years, and

(v) A demonstration satisfactory to the Administrator that the unit will qualify as oil-fired under the first sentence of this definition using those three consecutive calendar years as the three calendar year period.

Opacity means the degree to which emissions reduce the transmission of light and obscure the view of an object in the background.

Operating when referring to a combustion or process source seeking entry into the Opt-in Program, means that the source had documented consumption of fuel input for more than 876 hours in the 6 months immediately preceding the submission of a combustion source's opt-in application under § 74.16(a) of this chapter.

Operating permit means a permit issued under part 70 of this chapter and any other regulations implementing title V of the Act.

Opt in or opt into means to elect to become an affected unit under the Acid Rain Program through the issuance of the final effective opt-in permit under § 74.14 of this chapter.

Opt-in permit means the legally binding written document that is contained within the Acid Rain permit and sets forth the requirements under part 74 of this chapter for a combustion source or a process source that opts into the Acid Rain Program.

Opt-in source means a combustion source or process source that has elected to become an affected unit under the Acid Rain Program and whose opt-in permit has been issued and is in effect.

Out-of-control period means any period:

(1) Beginning with the hour corresponding to the completion of a daily calibration error, linearity check, or quality assurance audit that indicates that the instrument is not measuring and recording within the applicable performance specifications; and

(2) Ending with the hour corresponding to the completion of an additional calibration error, linearity check, or quality assurance audit following corrective action that demonstrates that the instrument is measuring and recording within the applicable performance specifications.

Oversubscription payment deadline means 30 calendar days prior to the allowance transfer deadline.

Owner means any of the following persons:

(1) Any holder of any portion of the legal or equitable title in an affected unit or in a combustion source or process source; or

(2) Any holder of a leasehold interest in an affected unit or in a combustion source or process source; or

(3) Any purchaser of power from an affected unit or from a combustion source or process source under a life-of-the-unit, firm power contractual arrangement as the term is defined herein and used in section 408(i) of the Act. However, unless expressly provided for in a leasehold agreement, owner shall not include a passive lessor, or a person who has an equitable interest through such lessor, whose rental payments are not based, either directly or indirectly, upon the revenues or income from the affected unit; or

(4) With respect to any Allowance Tracking System general account, any person identified in the submission required by § 73.31(c) of this chapter that is subject to the binding agreement for the authorized account representative to represent that person's ownership interest with respect to allowances.

Owner or operator means any person who is an owner or who operates, controls, or supervises an affected unit, affected source, combustion source, or process source and shall include, but

not be limited to, any holding company, utility system, or plant manager of an affected unit, affected source, combustion source, or process source.

Ozone nonattainment area means an area designated as a nonattainment area for ozone under subpart C of part 81 of this chapter.

Ozone transport region means the ozone transport region designated under Section 184 of the Act.

Peaking unit means:

(1) A unit that has:

(i) An average capacity factor of no more than 10.0 percent during the previous three calendar years and

(ii) A capacity factor of no more than 20.0 percent in each of those calendar years.

(2) For purposes of part 75 of this chapter, a unit may initially qualify as a peaking unit under the following circumstances:

(i) If the designated representative provides capacity factor data for the unit for the three calendar years immediately prior to submission of the monitoring plan and if the unit's capacity factor is projected to change on or before the certification deadline for NO_X monitoring in § 75.4 of this chapter, the designated representative submits a demonstration satisfactory to the Administrator that the unit will qualify as a peaking unit under the first sentence of this definition using the three calendar years beginning with the year of the certification deadline for NO_X monitoring in § 75.4 of this chapter (either 1995 or 1996) as the three year period; or

(ii) If the unit does not have capacity factor data for any one or more of the three calendar years immediately prior to submission of the monitoring plan, the designated representative submits:

(A) Any capacity factor data, beginning with the unit's first calendar year of commercial operation following the first year of the three calendar years immediately prior to the certification deadline for NO_X monitoring in § 75.4 of this chapter (either 1992 or 1993),

(B) Capacity factor information for the unit for any remaining future period needed to provide capacity factor data for three consecutive calendar years, and

(C) A demonstration satisfactory to the Administrator that the unit will qualify as a peaking unit under the first sentence of this definition using the three consecutive calendar years specified in (2) (ii) (A) and (B) as the three calendar year period.

Permit revision means a permit modification, fast track modification, administrative permit amendment, or automatic permit amendment, as provided in subpart H of this part.

Permitting authority means either:

(1) The Administrator in the case of issuance and administration of Acid Rain permits; or

(2) The State air pollution control agency, local agency, other State agency, or other agency authorized by the Administrator to issue proposed Acid Rain permits under subpart G of this part and the other regulations promulgated pursuant to titles IV and V of the Act.

Person includes an individual, corporation, partnership, association, State, municipality, political subdivision of a State, any agency, department, or instrumentality of the United States, and any officer, agent, or employee thereof.

Phase I means the Acid Rain Program period beginning January 1, 1995 and ending December 31, 1999.

Phase I unit means any affected unit, except an affected unit under part 74 of this chapter, that is subject to an Acid Rain emissions reduction requirement or Acid Rain emissions limitations beginning in Phase I.

Phase II means the Acid Rain Program period beginning January 1, 2000, and continuing into the future thereafter.

Phase II unit means any affected unit, except an affected unit under part 74 of this chapter, that is subject to an Acid Rain emissions reduction requirement or Acid Rain emissions limitation during Phase II only.

Pipeline natural gas means natural gas that is provided by a supplier through a pipeline.

Pollutant concentration monitor means that component of the continuous emission monitoring system that measures the concentration of a pollutant in a unit's flue gas.

Potential electrical output capacity means the MWe capacity rating for the units which shall be equal to 33 percent of the maximum design heat input capacity of the steam generating unit, as calculated according to appendix D of part 72.

Power distribution system means the portion of an electricity grid owned or operated by a utility that is dedicated to delivering electric energy to customers.

Power purchase commitment means a commitment or obligation of a utility to purchase electric power from a facility pursuant to:

(1) A power sales agreement;

(2) A state regulatory authority order requiring a utility to:

(i) Enter into a power sales agreement with the facility;

(ii) Purchase from the facility; or

(iii) Enter into arbitration concerning the facility for the purpose of establishing terms and conditions of the utility's purchase of power;

(3) A letter of intent or similar instrument committing to purchase power (actual electrical output or generator output capacity) from the source at a previously offered or lower price and a power sales agreement applicable to the source is executed within the time frame established by the terms of the letter of intent but no later than November 15, 1992 or, where the letter of intent does not specify a timeframe, a power sales agreement applicable to the source is executed on or before November 15, 1992; or

(4) A utility competitive bid solicitation that has resulted in the selection of the qualifying facility or independent power production facility as the winning bidder.

Power sales agreement is a legally binding agreement between a QF, IPP, new IPP, or firm associated with such facility and a regulated electric utility that establishes the terms and conditions for the sale of power from the facility to the utility.

Presiding Officer means an Administrative Law Judge appointed under 5 U.S.C. 3105 and designated to preside at a hearing in an appeal under part 78 of this chapter or an EPA lawyer designated to preside at any such hearing under § 78.6(b)(3)(ii) of this chapter.

Primary fuel or primary fuel supply means the main fuel type (expressed in mmBtu) consumed by an affected unit for the applicable calendar year.

Proposed Acid Rain permit or proposed permit means, in the case of a State operating permit program, the version of an Acid Rain permit that the permitting authority submits to the Administrator after the public comment period, but prior to completion of the EPA permit review period, as provided for in part 70 of this chapter.

Protocol 1 gas means a calibration gas mixture prepared and analyzed according to the ''Procedure for NBS-Traceable Certification of Compressed Gas Working Standards Used for Calibration and Audit of Continuous Emission Monitors (''Revised Traceability Protocol No. 1''),'' Quality Assurance Handbook for Air Pollution Measurement Systems, Volume III, Stationary Source Specific Methods, Section 3.04, EPA–600/4–77–027b, June 1987 (set forth in Appendix H of part 75 of this chapter) or such revised procedure as approved by the Administrator.

Qualifying facility (QF) means a ''qualifying small power production facility'' within the meaning of section 3(17)(C) of the Federal Power Act or a ''qualifying cogeneration facility'' within the meaning of section 3(18)(B) of the Federal Power Act.

Qualifying Phase I technology means a technological system of continuous emission reduction that is demonstrated to achieve a ninety (90) percent (or greater) reduction in emissions of sulfur dioxide from the emissions that would have resulted from the use of fossil fuels that were not subject to treatment prior to combustion, as provided in § 72.42.

Qualifying power purchase commitment means a power purchase commitment in effect as of November 15, 1990 without regard to changes to that commitment so long as:

(1) The identity of the electric output purchaser; or

(2) The identity of the steam purchaser and the location of the facility, remain unchanged as of the date the facility commences commercial operation; and

(3) The terms and conditions of the power purchase commitment are not

changed in such a way as to allow the costs of compliance with the Acid Rain Program to be shifted to the purchaser.

Qualifying repowering technology means:

(1) Replacement of an existing coal-fired boiler with one of the following clean coal technologies: Atmospheric or pressurized fluidized bed combustion, integrated gasification combined cycle, magnetohydrodynamics, direct and indirect coal-fired turbines, integrated gasification fuel cells, or as determined by the Administrator, in consultation with the Secretary of Energy, a derivative of one or more of these technologies, and any other technology capable of controlling multiple combustion emissions simultaneously with improved boiler or generation efficiency and with significantly greater waste reduction relative to the performance of technology in widespread commercial use as of the date of enactment of the Clean Air Act Amendments of 1990; or

(2) Any oil- or gas-fired unit that has been awarded clean coal technology demonstration funding as of January 1, 1991, by the Department of Energy.

Quality-assured monitor operating hour means any unit operating hour or portion thereof over which a certified CEMS, or other monitoring system approved by the Administrator under part 75 of this chapter, is operating:

(1) Within the performance specifications set forth in part 75, appendix A of this chapter and the quality assurance/quality control procedures set forth in part 75, appendix B of this chapter, without unscheduled maintenance, repair, or adjustment; and

(2) In accordance with § 75.10(d), (e), and (f) of this chapter.

Receive or receipt of means the date the Administrator or a permitting authority comes into possession of information or correspondence (whether sent in writing or by authorized electronic transmission), as indicated in an official correspondence log, or by a notation made on the information or correspondence, by the Administrator or the permitting authority in the regular course of business.

Recordation, record, or recorded means, with regard to allowances, the transfer of allowances by the Administrator from one Allowance Tracking System account or subaccount to another.

Reduced utilization means a reduction, during any calendar year in Phase I, in the heat input (expressed in mmBtu for the calendar year) at a Phase I unit below the unit's baseline, where such reduction subjects the unit to the requirement to submit a reduced utilization plan under § 72.43; or, in the case of an opt-in source, means a reduction in the average utilization, as specified in § 74.44 of this chapter, of an opt-in source below the opt-in source's baseline.

Reference method means any direct test method of sampling and analyzing for an air pollutant as specified in part 60, appendix A of this chapter.

Reference value or reference signal means the known concentration of a calibration gas, the known value of an electronic calibration signal, or the known value of any other measurement standard approved by the Administrator, assumed to be the true value for the pollutant or diluent concentration or volumetric flow being measured.

Relative accuracy means a statistic designed to provide a measure of the systematic and random errors associated with data from continuous emission monitoring systems, and is expressed as the absolute mean difference between the pollutant concentration or volumetric flow measured by the pollutant concentration or flow monitor and the value determined by the applicable reference method(s) plus the 2.5 percent error confidence coefficient of a series of tests divided by the mean of the reference method tests in accordance with part 75 of this chapter.

Replacement unit means an affected unit replacing the thermal energy provided by an opt-in source, where both the affected unit and the opt-in source are governed by a thermal energy plan.

Research gas material (RGM) means a calibration gas mixture developed by agreement of a requestor and the National Institutes for Standards and Technologies (NIST) that NIST analyzes and certifies as ''NIST traceable.'' RGMs may have concentrations different from those of standard reference materials.

Schedule of compliance means an enforceable sequence of actions, measures, or operations designed to achieve or maintain compliance, or correct non-compliance, with an applicable requirement of the Acid Rain Program, including any applicable Acid Rain permit requirement.

Secretary of Energy means the Secretary of the United States Department of Energy or the Secretary's duly authorized representative.

Serial number means, when referring to allowances, the unique identification number assigned to each allowance by the Administrator, pursuant to § 73.34(d) of this chapter.

Simple combustion turbine means a unit that is a rotary engine driven by a gas under pressure that is created by the combustion of any fuel. This term includes combined cycle units without auxiliary firing. This term excludes combined cycle units with auxiliary firing, unless the unit did not use the auxiliary firing from 1985 through 1987 and does not use auxiliary firing at any time after November 15, 1990.

Site lease, as used in part 73, subpart E of this chapter, means a legally-binding agreement signed between a new IPP or a firm associated with a new IPP and a site owner that establishes the terms and conditions under which the new IPP or the firm associated with the new IPP has the binding right to utilize a specific site for the purposes of operating or constructing the new IPP.

Small diesel refinery means a domestic motor diesel fuel refinery or portion of a refinery that, as an annual average of calendar years 1988 through 1990 and as reported to the Department of Energy on Form 810, had bona fide crude oil throughput less than 18,250,000 barrels per year, and the refinery or portion of a refinery is owned or controlled by a refiner with a total combined bona fide crude oil throughput of less than 50,187,500 barrels per year.

Solid waste incinerator means a source as defined in section 129(g)(1) of the Act.

Source means any governmental, institutional, commercial, or industrial structure, installation, plant, building, or facility that emits or has the potential to emit any regulated air pollutant under the Act. For purposes of section 502(c) of the Act, a ''source'', including a ''source'' with multiple units, shall be considered a single ''facility.''

Span means the range of values that a monitor component is required to be capable of measuring under part 75 of this chapter.

Spot allowance means an allowance that may be used for purposes of compliance with a unit's Acid Rain sulfur dioxide emissions limitation requirements beginning in the year in which the allowance is offered for sale.

Spot auction means an auction of a spot allowance.

Spot sale means a sale of a spot allowance.

Stack means a structure that includes one or more flues and the housing for the flues.

Standard conditions means 68 °F at 1 atm (29.92 in. of mercury).

Standard reference material or *SRM* means a calibration gas mixture issued and certified by NIST as having specific known chemical or physical property values.

State means one of the 48 contiguous States and the District of Columbia and includes any non-federal authorities, including local agencies, interstate associations, and State-wide agencies with approved State operating permit programs. The term ''State'' shall have its conventional meaning where such meaning is clear from the context.

State operating permit program means an operating permit program that the Administrator has approved as meeting the requirements of titles IV and V of the Act, part 70 of this chapter, and this part, including subpart G of this part.

Stationary gas turbine means a turbine that is not self-propelled and that combusts natural gas, other gaseous fuel with a sulfur content no greater than natural gas, or fuel oil in order to heat inlet combustion air and thereby turn a turbine, in addition to or instead of producing steam or heating water.

Steam sales agreement is a legally binding agreement between a QF, IPP, new IPP, or firm associated with such facility and an industrial or commercial establishment requiring steam

that establishes the terms and conditions under which the facility will supply steam to the establishment.

Submit or serve means to send or transmit a document, information, or correspondence to the person specified in accordance with the applicable regulation:

(1) In person;

(2) By United States Postal Service certified mail with the official postmark or, if service is by the Administrator or the permitting authority, by any other mail service by the United States Postal Service; or

(3) By other means with an equivalent time and date mark used in the regular course of business to indicate the date of dispatch or transmission and a record of prompt delivery. Compliance with any ''submission'', ''service'', or ''mailing'' deadline shall be determined by the date of dispatch, transmission, or mailing and not the date of receipt.

Substitute data means emissions or volumetric flow data provided to assure 100 percent recording and reporting of emissions when all or part of the continuous emission monitoring system is not functional or is operating outside applicable performance specifications.

Substitution unit means an affected unit, other than a unit under section 410 of the Act, that is designated as a Phase I unit in a substitution plan under § 72.41.

Sulfur-free generation means the generation of electricity by a process that does not have any emissions of sulfur dioxide, including hydroelectric, nuclear, solar, or wind generation. A ''sulfur-free generator'' is a generator that is located in one of the 48 contiguous States or the District of Columbia and produces ''sulfur-free generation.''

Supply-side measure means a measure to improve the efficiency of the generation, transmission, or distribution of electricity, implemented by a utility in connection with its operations or facilities to provide electricity to its customers, and includes the measures set forth in part 73, appendix A, section 2 of this chapter.

Thermal energy means the thermal output produced by a combustion source used directly as part of a manufacturing process but not used to produce electricity.

Ton or tonnage means any ''short ton'' (i.e., 2,000 pounds). For the purpose of determining compliance with the Acid Rain emissions limitations and reduction requirements, total tons for a year shall be calculated as the sum of all recorded hourly emissions (or the tonnage equivalent of the recorded hourly emissions rates) in accordance with part 75 of this chapter, with any remaining fraction of a ton equal to or greater than 0.50 ton deemed to equal one ton and any fraction of a ton less than 0.50 ton deemed not to equal any ton.

Total planned net output capacity means the planned generator output capacity, excluding that portion of the electrical power which is designed to be used at the power production facility, as specified under one or more qualifying power purchase commitments or contemporaneous documents as of November 15, 1990; ''Total installed net output capacity'' shall be the generator output capacity, excluding that portion of the electrical power actually used at the power production facility, as installed.

Transfer unit means a Phase I unit that transfers all or part of its Phase I emission reduction obligations to a control unit designated pursuant to a Phase I extension plan under § 72.42.

Underutilization means a reduction, during any calendar year in Phase I, of the heat input (expressed in mmBtu for the calendar year) at a Phase I unit below the unit's baseline.

Unit means a fossil fuel-fired combustion device.

Unit account means an Allowance Tracking System account, established by the Administrator for an affected unit pursuant to § 73.31 (a) or (b) of this chapter.

Unit load means the total (i.e., gross) output of a unit or source in any calendar year (or other specified time period) produced by combusting a given heat input of fuel, expressed in terms of:

(1) The total electrical generation (MWe) for use within the plant and for sale; or

(2) In the case of a unit or source that uses part of its heat input for purposes other than electrical generation, the total steam pressure (psia) produced by the unit or source.

Unit operating day means a calendar day in which a unit combusts any fuel.

Unit operating hour means any hour (or fraction of an hour) during which a unit combusts any fuel.

Unit operating quarter means a calendar quarter in which a unit combusts any fuel.

Utility means any person that sells electricity.

Utility competitive bid solicitation is a public request from a regulated utility for offers to the utility for meeting future generating needs. A qualifying facility, independent power production facility, or new IPP may be regarded as having been ''selected'' in such solicitation if the utility has named the facility as a project with which the utility intends to negotiate a power sales agreement.

Utility regulatory authority means an authority, board, commission, or other entity (limited to the local-, State-, or federal-level, whenever so specified) responsible for overseeing the business operations of utilities located within its jurisdiction, including, but not limited to, utility rates and charges to customers.

Utility system means all interconnected units and generators operated by the same utility operating company.

Utility unit means a unit owned or operated by a utility:

(1) That serves a generator in any State that produces electricity for sale, or

(2) That during 1985, served a generator in any State that produced electricity for sale.

(3) Notwithstanding paragraphs (1) and (2) of this definition, a unit that was in operation during 1985, but did not serve a generator that produced electricity for sale during 1985, and did not commence commercial operation on or after November 15, 1990 is not a utility unit for purposes of the Acid Rain Program.

(4) Notwithstanding paragraphs (1) and (2) of this definition, a unit that cogenerates steam and electricity is not a utility unit for purposes of the Acid Rain Program, unless the unit is constructed for the purpose of supplying, or commences construction after November 15, 1990 and supplies, more than one-third of its potential electrical output capacity and more than 25 MWe output to any power distribution system for sale.

Utilization means the heat input (expressed in mmBtu/time) for a unit.

Volumetric flow means the rate of movement of a specified volume of gas past a cross-sectional area (e.g., cubic feet per hour).

Zero air material means either: (1) a calibration gas certified by the gas vendor not to contain concentrations of either SO_2, NO_X, or total hydrocarbons above 0.1 parts per million (ppm); a concentration of CO above 1 ppm; and a concentration of CO_2 above 400 ppm, or (2) ambient air conditioned and purified by a continuous emission monitoring system for which the continuous emission monitoring system manufacturer or vendor certifies that the particular continuous emission monitoring system model produces conditioned gas that does not contain concentrations of either SO_2 or NO_X above 0.1 ppm or CO_2 above 400 ppm; and that does not contain concentrations of other gases that interfere with instrument readings or cause the instrument to read concentrations of SO_2, NO_X, or CO_2 for a particular continuous emission monitoring system model.

[58 FR 3650, Jan. 11, 1993, as amended at 58 FR 15647, Mar. 23, 1993; 58 FR 33770, June 21, 1993; 58 FR 40747, July 30, 1993; 60 FR 17111, Apr. 4, 1995; 60 FR 18468, Apr. 11, 1995; 60 FR 26514, May 17, 1995]

§ 72.3 Measurements, abbreviations, and acronyms.

Measurements, abbreviations, and acronyms used in this part are defined as follows:

acfh—actual cubic feet per hour.
atm—atmosphere.
bbl—barrel.
Btu—British thermal unit.
°C—degree Celsius (centigrade).
cfm—cubic feet per minute.
cm—centimeter.
dcf—dry cubic feet.
DOE—Department of Energy.

dscf—dry cubic feet at standard conditions.
dscfh—dry cubic feet per hour at standard conditions.
EIA—Energy Information Administration.
eq—equivalent.
°F—degree Fahrenheit.
fps—feet per second.
gal—gallon.
hr—hour.
in—inch.
°K—degree Kelvin.
Kwh—kilowatt hour.
lb—pounds.
m—meter.
mmBtu—million Btu.
min—minute.
mol. wt.—molecular weight.
MWe—megawatt electrical.
MWge—gross megawatt electrical.
ppm—parts per million.
psi—pounds per square inch.
°R—degree Rankine.
scf—cubic feet at standard conditions.
scfh—cubic feet per hour at standard conditions.
sec—second.
std—at standard conditions.
CO_2—carbon dioxide.
NO_x—nitrogen oxides.
O_2—oxygen.
THC—total hydrocarbon content.
SO_2—sulfur dioxide.

§ 72.4 Federal authority.

(a) The Administrator reserves all authority under sections 112(r)(9), 113, 114, 120, 301, 303, 304, 306, and 307(a) of the Act, including, but not limited to, the authority to:

(1) Secure information needed for the purpose of developing, revising, or implementing, or of determining whether any person is in violation of, any standard, method, requirement, or prohibition of the Act, this part, parts 73, 74, 75, 76, 77, and 78 of this chapter;

(2) Make inspections, conduct tests, examine records, and require an owner or operator of an affected unit to submit information reasonably required for the purpose of developing, revising, or implementing, or of determining whether any person is in violation of, any standard, method, requirement, or prohibition of the Act, this part, parts 73, 74, 75, 76, 77, and 78 of this chapter.

(3) Issue orders, call witnesses, and compel the production of documents.

(b) The Administrator reserves the right under title IV of the Act to take any action necessary to protect the orderly and competitive functioning of the allowance system, including actions to prevent fraud and misrepresentation.

[58 FR 3650, Jan. 11, 1993, as amended at 60 FR 17113, Apr. 4, 1995]

§ 72.5 State authority.

Consistent with section 116 of the Act, the provisions of the Acid Rain Program shall not be construed in any manner to preclude any State from adopting and enforcing any other air quality requirement (including any continuous emissions monitoring) that is not less stringent than, and does not alter, any requirement applicable to an affected unit or affected source under the Acid Rain Program; *provided* that such State requirement, if articulated in an operating permit, is in a portion of the operating permit separate from the portion containing the Acid Rain Program requirements.

§ 72.6 Applicability.

(a) Each of the following units shall be an affected unit, and any source that includes such a unit shall be an affected source, subject to the requirements of the Acid Rain Program:

(1) A unit listed in Table 1 of § 73.10(a) of this chapter.

(2) A unit that is listed in Table 2 or 3 of § 73.10 of this chapter and any other existing utility unit, except a unit under paragraph (b) of this section.

(3) A utility unit, except a unit under paragraph (b) of this section, that:

(i) Is a new unit; or

(ii) Did not serve a generator with a nameplate capacity greater than 25 MWe on November 15, 1990 but serves such a generator after November 15, 1990.

(iii) Was a simple combustion turbine on November 15, 1990 but adds or uses auxiliary firing after November 15, 1990;

(iv) Was an exempt cogeneration facility under paragraph (b)(4) of this section but during any three calendar year period after November 15, 1990 sold, to a utility power distribution

system, an annual average of more than one-third of its potential electrical output capacity and more than 219,000 MWe-hrs electric output, on a gross basis;

(v) Was an exempt qualifying facility under paragraph (b)(5) of this section but, at any time after the later of November 15, 1990 or the date the facility commences commercial operation, fails to meet the definition of qualifying facility;

(vi) Was an exempt IPP under paragraph (b)(6) of this section but, at any time after the later of November 15, 1990 or the date the facility commences commercial operation, fails to meet the definition of independent power production facility; or

(vii) Was an exempt solid waste incinerator under paragraph (b)(7) of this section but during any three calendar year period after November 15, 1990 consumes 20 percent or more (on a Btu basis) fossil fuel.

(b) The following types of units are not affected units subject to the requirements of the Acid Rain Program:

(1) A simple combustion turbine that commenced operation before November 15, 1990.

(2) Any unit that commenced commercial operation before November 15, 1990 and that did not, as of November 15, 1990, and does not currently, serve a generator with a nameplate capacity of greater than 25 MWe.

(3) Any unit that, during 1985, did not serve a generator that produced electricity for sale and that did not, as of November 15, 1990, and does not currently, serve a generator that produces electricity for sale.

(4) A cogeneration facility which:

(i) For a unit that commenced construction on or prior to November 15, 1990, was constructed for the purpose of supplying equal to or less than one-third its potential electrical output capacity or equal to or less than 219,000 MWe-hrs actual electric output on an annual basis to any utility power distribution system for sale (on a gross basis). If the purpose of construction is not known, the Administrator will presume that actual operation from 1985 through 1987 is consistent with such purpose. However, if in any three calendar year period after November 15, 1990, such unit sells to a utility power distribution system an annual average of more than one-third of its potential electrical output capacity and more than 219,000 MWe-hrs actual electric output (on a gross basis), that unit shall be an affected unit, subject to the requirements of the Acid Rain Program; or

(ii) For units which commenced construction after November 15, 1990, supplies equal to or less than one-third its potential electrical output capacity or equal to or less than 219,000 MWe-hrs actual electric output on an annual basis to any utility power distribution system for sale (on a gross basis). However, if in any three calendar year period after November 15, 1990, such unit sells to a utility power distribution system an annual average of more than one-third of its potential electrical output capacity and more than 219,000 MWe-hrs actual electric output (on a gross basis), that unit shall be an affected unit, subject to the requirements of the Acid Rain Program.

(5) A qualifying facility that:

(i) Has, as of November 15, 1990, one or more qualifying power purchase commitments to sell at least 15 percent of its total planned net output capacity; and

(ii) Consists of one or more units designated by the owner or operator with total installed net output capacity not exceeding 130 percent of the total planned net output capacity. If the emissions rates of the units are not the same, the Administrator may exercise discretion to designate which units are exempt.

(6) An independent power production facility that:

(i) Has, as of November 15, 1990, one or more qualifying power purchase commitments to sell at least 15 percent of its total planned net output capacity; and

(ii) Consists of one or more units designated by the owner or operator with total installed net output capacity not exceeding 130 percent of its total planned net output capacity. If the emissions rates of the units are not the same, the Administrator may exercise discretion to designate which units are exempt.

(7) A solid waste incinerator, if more than 80 percent (on a Btu basis) of the annual fuel consumed at such incinerator is other than fossil fuels. For solid waste incinerators which began operation before January 1, 1985, the average annual fuel consumption of non-fossil fuels for calendar years 1985 through 1987 must be greater than 80 percent for such an incinerator to be exempt. For solid waste incinerators which began operation after January 1, 1985, the average annual fuel consumption of non-fossil fuels for the first three years of operation must be greater than 80 percent for such an incinerator to be exempt. If, during any three calendar year period after November 15, 1990, such incinerator consumes 20 percent or more (on a Btu basis) fossil fuel, such incinerator will be an affected source under the Acid Rain Program.

(8) A non-utility unit.

(c) A certifying official of any unit may petition the Administrator for a determination of applicability under this section.

(1) *Petition content.* The petition shall be in writing and include identification of the unit and relevant and appropriate facts about the unit. The petition shall meet the requirements of § 72.21. In accordance with § 72.21(d), the certifying official shall provide each owner or operator of the unit, facility, or source with a copy of the petition and a copy of the Administrator's response.

(2) *Timing.* The petition shall be submitted to the Administrator prior to the issuance (including renewal) of a Phase II Acid Rain permit for the unit as a final agency action.

(3) *Submission.* All submittals under this section shall be made by the certifying official to the Director, Acid Rain Division, (6204J), 401 M Street, SW., Washington, DC, 20460.

(4) *Response.* The Administrator will issue a written response based upon the factual submittal meeting the requirements of paragraph (c)(1) of this section.

(5) *Administrative appeals.* The Administrator's determination of applicability is a decision appealable under 40 CFR part 78 of this chapter.

(6) *Effect of determination.* The Administrator's determination of applicability shall be binding upon the permitting authority, unless the petition is found to have contained significant errors or omissions.

[58 FR 3650, Jan. 11, 1993, as amended at 58 FR 15648, Mar. 23, 1993]

§ 72.7 New units exemption.

(a) *Applicability.* This section applies to any new utility unit that serves one or more generators with total nameplate capacity of 25 MWe or less and burns only fuels with a sulfur content of 0.05 percent or less by weight, as determined in accordance with paragraph (d)(2) of this section.

(b) *Petition for written exemption.* The designated representative, authorized in accordance with subpart B of this part, of a source that includes a unit under paragraph (a) of this section may petition the permitting authority for a written exemption, or to renew a written exemption, for the unit from certain requirements of the Acid Rain Program. The petition shall include the following elements in a format prescribed by the Administrator:

(1) Identification of the unit.

(2) The nameplate capacity of each generator served by the unit.

(3) A list of all fuels currently burned by the unit and their percentage sulfur content by weight, determined in accordance with paragraph (a) of this section.

(4) A list of all fuels that are expected to be burned by the unit and their sulfur content by weight.

(5) The special provisions in paragraph (d) of this section.

(c) *Permitting authority's action.*

(1)(i) The permitting authority shall issue, for any unit meeting the requirements of paragraphs (a) and (b) of this section, a written exemption from the requirements of the Acid Rain Program except for the requirements specified in this section and §§ 72.1 through 72.6 and §§ 72.10 through 72.13; *provided* that no unit shall be exempted unless allowances, equal in number to, and with the same or earlier compliance use date as, all of those allocated under subpart B of part 73 of this chapter for any year for which the unit will be exempted,

are deducted from the unit's Allowance Tracking System account.

(ii) The exemption shall take effect on January 1 of the year immediately following the earlier of the date on which the written exemption is issued subject to administrative appeal under part 78 of this chapter or is issued as a final agency action subject to judicial review, in accordance with paragraph (c)(2) of this section; *provided* that the owners and operators, and, to the extent applicable, the designated representative, shall comply with the requirements of the Acid Rain Program concerning all years for which the unit was not exempted, even if such requirements arise, or must be complied with, after the exemption takes effect. The exemption shall not be a defense against any violation of such requirements of the Acid Rain Program whether the violation occurs before or after the exemption takes effect.

(2) In considering and issuing or denying a written exemption under paragraph (c)(1) of this section, the permitting authority shall apply the procedures in subparts F and G of this part and part 70 of this chapter, as applicable, by:

(i) Treating the petition as an Acid Rain permit application under such provisions;

(ii) Issuing or denying a draft written exemption that is treated as the issuance or denial of a draft permit under such provisions; and

(iii) Where the Administrator is the permitting authority, issuing or denying a written exemption that is treated as the issuance or denial of a permit under subpart F of this part or, where a State is the permitting authority, issuing or denying a proposed written exemption that is treated as the issuance or denial of a proposed permit under subpart G of this part and part 70 of this chapter; *provided* that no provision under subparts F and G of this part and part 70 of this chapter concerning the content, effective date, or term of an Acid Rain permit shall apply to the written exemption or proposed written exemption under this section.

(3) A written exemption issued under this section shall have a term of 5 years from its effective date, except as provided in paragraph (d)(4) of this section.

(d) *Special provisions.* (1) The owners and operators of each unit exempted under this section shall surrender allowances equal in number to, and with the same or an earlier compliance use date as, all of those allocated to the unit under subpart B of part 73 of this chapter for any year for which the unit is exempted and shall waive the right to receive any allowances to be allocated under subpart B of part 73 of this chapter for any year for which the unit is exempted.

(2) The owners and operators of each unit exempted under this section shall determine the sulfur content by weight of its fuel as follows:

(i) For petroleum or petroleum products that the unit burns starting on the first day on which the exemption takes effect until the exemption terminates, a sample of each delivery of such fuel shall be tested using ASTM methods ASTM D4057–88 and ASTM D129–91, ASTM D2622–92, or ASTM D4294–90 (all methods incorporated by reference under § 72.13 of this part.)

(ii) For natural gas that the unit burns starting on the first day on which the exemption takes effect until the exemption terminates, the sulfur content shall be assumed to be 0.05 per cent or less by weight.

(iii) For gaseous fuel (other than natural gas) that the unit burns starting on the first day on which the exemption takes effect until the exemption terminates, a sample of each delivery of such fuel shall be tested using ASTM methods ASTM D1072–90 and ASTM D1265–92 (incorporated by reference under § 72.13 of this part); *provided* that if the gaseous fuel is delivered by pipeline to the unit, a sample of the fuel shall be tested, at least once every quarter in which the unit operates during any year for which the exemption is in effect, using ASTM method ASTM D1072–90 (incorporated by reference under § 72.13 of this part).

(3) The owners and operators of each unit exempted under this section shall retain at the source that includes the unit, the records of the results of the tests performed under paragraph (d)(2)(i) and (iii) of this section and a copy of the purchase agreements for the fuel

under paragraph (d)(2) of this section, stating the sulfur content of such fuel. Such records and documents shall be retained for 5 years from the date they are created.

(4) On the earlier of the date the written exemption expires, the date a unit exempted under this section burns any fuel with a sulfur content in excess of 0.05 percent by weight (as determined in accordance with paragraph (d)(2) of this section), or 24 months prior to the date the unit first serves one or more generators with total nameplate capacity in excess of 25 MWe, the unit shall no longer be exempted under this section and shall be subject to all requirements of the Acid Rain Program, except that:

(i) Notwithstanding § 72.30 (b) and (c), the designated representative of the source that includes the unit shall submit a complete Acid Rain permit application on the later of January 1, 1998 or the date the unit is no longer exempted under this section.

(ii) For purposes of applying monitoring requirements under part 75 of this chapter, the unit shall be treated as a new unit that commenced commercial operation on the date the unit no longer meets the requirements of paragraph (a) of this section.

§ 72.8 Retired units exemption.

(a) *Applicability*. This section applies to any affected unit that is retired prior to the issuance (including renewal) of a Phase II Acid Rain permit for the unit as a final agency action.

(b) *Petition for Written Exemption*. (1) The designated representative, authorized in accordance with subpart B of this part, of a source that includes a unit under paragraph (a) of this section may petition the permitting authority for a written exemption, or to renew a written exemption, for the unit from certain requirements of this part.

(2) A petition under this section shall be submitted on or before:

(i) The deadline for submitting an Acid Rain permit application for Phase II; or

(ii) If the unit has a Phase II Acid Rain permit, the deadline for reapplying for such permit.

(3) The petition under this section shall include the following elements in a format prescribed by the Administrator:

(i) Identification of the unit.

(ii) The applicable deadline under paragraph (b)(2) of this section.

(iii) The actual or expected date of retirement of the unit.

(iv) The following statement: ''I certify that this unit ['is' or 'will be', as applicable] permanently retired on the date specified in this petition and will not emit any sulfur dioxide or nitrogen oxides after such date.''

(v) A description of any actions that have been or will be taken and provide the basis for the certification in paragraph (b)(3)(iv) of this section.

(vi) The special provisions in paragraph (d) of this section.

(c) *Permitting Authority's Action*. (1)(i) The permitting authority shall issue, for any unit meeting the requirements of paragraphs (a) and (b) of this section, a written exemption from the requirements of this part except for the requirements specified in this section and §§ 72.1 through 72.6 and §§ 72.10 through 72.13.

(ii) The exemption shall take effect on January 1 of the year following the earlier of the date on which the written exemption is issued subject to administrative appeal under part 78 of this chapter or is issued as a final agency action subject to judicial review, in accordance with paragraph (c)(2) of this section; *provided* that the owners and operators, and, to the extent applicable, the designated representative, shall comply with the requirements of this part concerning all years for which the unit was not exempted, even if such requirements arise or must be complied with after the exemption takes effect. The exemption shall not be a defense against any violation of such requirements of the Acid Rain Program whether the violation occurs before or after the exemption takes effect.

(2) In considering and issuing or denying a written exemption under paragraph (c)(1) of this section, the permitting authority shall apply the procedures in subparts F and G of this part and part 70 of this chapter, as applicable, by:

(i) Treating the petition as an Acid Rain permit application under such provisions;

(ii) Issuing or denying a draft written exemption that is treated as the issuance or denial of a draft permit under such provisions; and

(iii) Where the Administrator is the permitting authority, issuing or denying a written exemption that is treated as a permit under subpart F of this part or, where a State is the permitting authority, issuing or denying a proposed written exemption that is treated as a proposed permit under subpart G of this part and part 70 of this chapter; *provided* that no provision under subparts F and G of this part and part 70 of this chapter concerning, the content, effective date, or term of an Acid Rain permit shall apply to the written exemption or proposed written exemption under this section.

(3) A written exemption issued under this section shall have a term of 5 years, except as provided in paragraph (d)(3) of this section.

(d) *Special Provisions.* (1) A unit exempted under this section shall not emit any sulfur dioxide and nitrogen dioxide starting on the date it is exempted.

(2) The owners and operators of a unit exempted under this section shall comply with monitoring requirements in accordance with part 75 of this chapter and will be allocated allowances in accordance with part 73 of this chapter.

(3) A unit exempted under this section shall not resume operation unless the designated representative of the source that includes the unit submits an Acid Rain permit application for the unit not less than 24 months prior to the later of January 1, 2000 or the date the unit is to resume operation. On the earlier of the date the written exemption expires or the date an Acid Rain permit application is submitted or is required to be submitted under this paragraph, the unit shall no longer be exempted under this section and shall be subject to all requirements of this part.

[58 FR 3650, Jan. 11, 1993; 58 FR 40747, July 30, 1993]

§ 72.9 Standard requirements.

(a) *Permit Requirements.* (1) The designated representative of each affected source and each affected unit at the source shall:

(i) Submit a complete Acid Rain permit application (including a compliance plan) under this part in accordance with the deadlines specified in § 72.30;

(ii) Submit in a timely manner a complete reduced utilization plan if required under § 72.43; and

(iii) Submit in a timely manner any supplemental information that the permitting authority determines is necessary in order to review an Acid Rain permit application and issue or deny an Acid Rain permit.

(2) The owners and operators of each affected source and each affected unit at the source shall:

(i) Operate the unit in compliance with a complete Acid Rain permit application or a superseding Acid Rain permit issued by the permitting authority; and

(ii) Have an Acid Rain Permit.

(b) *Monitoring Requirements.* (1) The owners and operators and, to the extent applicable, designated representative of each affected source and each affected unit at the source shall comply with the monitoring requirements as provided in part 75 of this chapter and section 407 of the Act and regulations implementing section 407 of the Act.

(2) The emissions measurements recorded and reported in accordance with part 75 of this chapter and section 407 of the Act and regulations implementing section 407 of the Act shall be used to determine compliance by the unit with the Acid Rain emissions limitations and emissions reduction requirements for sulfur dioxide and nitrogen oxides under the Acid Rain Program.

(3) The requirements of part 75 of this chapter and regulations implementing section 407 of the Act shall not affect the responsibility of the owners and operators to monitor emissions of other pollutants or other emissions characteristics at the unit under other applicable requirements of the Act and other provisions of the operating permit for the source.

(c) *Sulfur Dioxide Requirements.* (1) The owners and operators of each source and each affected unit at the source shall:

(i) Hold allowances, as of the allowance transfer deadline, in the unit's

compliance subaccount (after deductions under § 73.34(c) of this chapter) not less than the total annual emissions of sulfur dioxide for the previous calendar year from the unit; and

(ii) Comply with the applicable Acid Rain emissions limitation for sulfur dioxide.

(2) Each ton of sulfur dioxide emitted in excess of the Acid Rain emissions limitations for sulfur dioxide shall constitute a separate violation of the Act.

(3) An affected unit shall be subject to the requirements under paragraph (c)(1) of this section as follows:

(i) Starting January 1, 1995, an affected unit under § 72.6(a)(1);

(ii) Starting on or after January 1, 1995 in accordance with §§ 72.41 and 72.43, an affected unit under § 72.6(a) (2) or (3) that is a substitution or compensating unit;

(iii) Starting January 1, 2000, an affected unit under § 72.6(a)(2) that is not a substitution or compensating unit; or

(iv) Starting on the later of January 1, 2000 or the deadline for monitor certification under part 75 of this chapter, an affected unit under § 72.6(a)(3) that is not a substitution or compensating unit.

(4) Allowances shall be held in, deducted from, or transferred among Allowance Tracking System accounts in accordance with the Acid Rain Program.

(5) An allowance shall not be deducted, in order to comply with the requirements under paragraph (c)(1)(i) of this section, prior to the calendar year for which the allowance was allocated.

(6) An allowance allocated by the Administrator under the Acid Rain Program is a limited authorization to emit sulfur dioxide in accordance with the Acid Rain Program. No provision of the Acid Rain Program, the Acid Rain permit application, the Acid Rain permit, or the written exemption under §§ 72.7 and 72.8 and no provision of law shall be construed to limit the authority of the United States to terminate or limit such authorization.

(7) An allowance allocated by the Administrator under the Acid Rain Program does not constitute a property right.

(d) *Nitrogen Oxides Requirements.* The owners and operators of the source and each affected unit at the source shall comply with the applicable Acid Rain emissions limitation for nitrogen oxides.

(e) *Excess Emissions Requirements.* (1) The designated representative of an affected unit that has excess emissions in any calendar year shall submit a proposed offset plan, as required under part 77 of this chapter.

(2) The owners and operators of an affected unit that has excess emissions in any calendar year shall:

(i) Pay without demand the penalty required, and pay upon demand the interest on that penalty, as required by part 77 of this chapter; and

(ii) Comply with the terms of an approved offset plan, as required by part 77 of this chapter.

(f) *Recordkeeping and Reporting Requirements.* (1) Unless otherwise provided, the owners and operators of the source and each affected unit at the source shall keep on site at the source each of the following documents for a period of 5 years from the date the document is created. This period may be extended for cause, at any time prior to the end of 5 years, in writing by the Administrator or permitting authority.

(i) The certificate of representation for the designated representative for the source and each affected unit at the source and all documents that demonstrate the truth of the statements in the certificate of representation, in accordance with § 72.24; *provided* that the certificate and documents shall be retained on site at the source beyond such 5-year period until such documents are superseded because of the submission of a new certificate of representation changing the designated representative.

(ii) All emissions monitoring information, in accordance with part 75 of this chapter.

(iii) Copies of all reports, compliance certifications, and other submissions and all records made or required under the Acid Rain Program.

(iv) Copies of all documents used to complete an Acid Rain permit application and any other submission under the Acid Rain Program or to demonstrate compliance with the requirements of the Acid Rain Program.

(2) The designated representative of an affected source and each affected unit at the source shall submit the reports and compliance certifications required under the Acid Rain Program, including those under subpart I of this part and part 75 of this chapter.

(g) *Liability*. (1) Any person who knowingly violates any requirement or prohibition of the Acid Rain Program, a complete Acid Rain permit application, an Acid Rain permit, or a written exemption under § 72.7 or § 72.8, including any requirement for the payment of any penalty owed to the United States, shall be subject to enforcement pursuant to section 113(c) of the Act.

(2) Any person who knowingly makes a false, material statement in any record, submission, or report under the Acid Rain Program shall be subject to criminal enforcement pursuant to section 113(c) of the Act and 18 U.S.C. 1001.

(3) No permit revision shall excuse any violation of the requirements of the Acid Rain Program that occurs prior to the date that the revision takes effect.

(4) Each affected source and each affected unit shall meet the requirements of the Acid Rain Program.

(5) Any provision of the Acid Rain Program that applies to an affected source (including a provision applicable to the designated representative of an affected source) shall also apply to the owners and operators of such source and of the affected units at the source.

(6) Any provision of the Acid Rain Program that applies to an affected unit (including a provision applicable to the designated representative of an affected unit) shall also apply to the owners and operators of such unit. Except as provided under § 72.41 (substitution plans), § 72.42 (Phase I extension plans), § 72.43 (reduced utilization plans), § 72.44 (Phase II repowering extension plans), § 74.47 of this chapter (thermal energy plans), and part 76 of this chapter (NO_X averaging plans), and except with regard to the requirements applicable to units with a common stack under part 75 of this chapter (including §§ 75.16, 75.17 and 75.18 of this chapter), the owners and operators and the designated representative of one affected unit shall not be liable for any violation by any other affected unit of which they are not owners or operators or the designated representative and that is located at a source of which they are not owners or operators or the designated representative.

(7) Each violation of a provision of this part, parts 73, 74, 75, 76, 77, and 78 of this chapter, by an affected source or affected unit, or by an owner or operator or designated representative of such source or unit, shall be a separate violation of the Act.

(h) *Effect on Other Authorities.* No provision of the Acid Rain Program, an Acid Rain permit application, an Acid Rain permit, or a written exemption under §§ 72.7 or 72.8 shall be construed as:

(1) Except as expressly provided in title IV of the Act, exempting or excluding the owners and operators and, to the extent applicable, the designated representative of an affected source or affected unit from compliance with any other provision of the Act, including the provisions of title I of the Act relating to applicable National Ambient Air Quality Standards or State Implementation Plans.

(2) Limiting the number of allowances a unit can hold; *provided*, that the number of allowances held by the unit shall not affect the source's obligation to comply with any other provisions of the Act.

(3) Requiring a change of any kind in any State law regulating electric utility rates and charges, affecting any State law regarding such State regulation, or limiting such State regulation, including any prudence review requirements under such State law.

(4) Modifying the Federal Power Act or affecting the authority of the Federal Energy Regulatory Commission under the Federal Power Act.

(5) Interfering with or impairing any program for competitive bidding for power supply in a State in which such program is established.

[58 FR 3650, Jan. 11, 1993, as amended at 60 FR 17113, Apr. 4, 1995]

§ 72.10 Availability of information.

The availability to the public of information provided to, or otherwise obtained by, the Administrator under the

Acid Rain Program shall be governed by part 2 of this chapter.

§72.11 Computation of time.

(a) Unless otherwise stated, any time period scheduled, under the Acid Rain Program, to begin on the occurrence of an act or event shall begin on the day the act or event occurs.

(b) Unless otherwise stated, any time period scheduled, under the Acid Rain Program, to begin before the occurrence of an act or event shall be computed so that the period ends on the day before the act or event occurs.

(c) Unless otherwise stated, if the final day of any time period, under the Acid Rain Program, falls on a weekend or a federal holiday, the time period shall be extended to the next business day.

(d) Whenever a party or interested person has the right, or is required, to act under the Acid Rain Program within a prescribed time period after service of notice or other document upon him or her by mail, 3 days shall be added to the prescribed time.

§72.12 Administrative appeals.

The procedures for appeals of decisions of the Administrator under this part are contained in part 78 of this chapter.

§72.13 Incorporation by reference.

The materials listed in this section are incorporated by reference in the corresponding sections noted. These incorporations by reference were approved by the Director of the Federal Register in accordance with 5 U.S.C. 552(a) and 1 CFR part 51. These materials are incorporated as they existed on the date of approval, and a notice of any change in these materials will be published in the FEDERAL REGISTER. The materials are available for purchase at the corresponding address noted below and are available for inspection at the Office of the Federal Register, 800 North Capitol Street, NW., Suite 700, Washington, DC, at the Public Information Reference Unit of the U.S. EPA, 401 M Street SW, Washington, DC and at the Library (MD–35), U.S. EPA, Research Triangle Park, North Carolina.

(a) The following materials are available for purchase from the following addresses: American Society for Testing and Material (ASTM), 1916 Race Street, Philadelphia, Pennsylvania 19103; and the University Microfilms International 300 North Zeeb Road, Ann Arbor, Michigan 48106.

(1) ASTM D129–91, Standard Test Method for Sulfur in Petroleum Products (General Bomb Method), for §72.7 of this chapter.

(2) ASTM D388–92, Standard Classification of Coals by Rank for §72.2 of this chapter.

(3) ASTM D396–90a, Standard Specification for Fuel Oils, for §72.2 of this chapter.

(4) ASTM D975–91, Standard Specification for Diesel Fuel Oils, for §72.2 of this chapter.

(5) ASTMD1072–90, Standard Test Method for Total Sulfur in Fuel Gases, for §72.7 of this chapter.

(6) ASTMD1265–92, Standard Practice for Sampling Liquified Petroleum (LP) Gases (Manual Method), for §72.7 of this chapter.

(7) ASTM D2622–92, Standard Test Method for Sulfur in Petroleum Products by X-Ray Spectrometry, for §72.7 of this chapter.

(8) ASTM D2880–90a, Standard Specification for Gas Turbine Fuel Oils, for §72.2 of this part.

(9) ASTM D4057–88, Standard Practice for Manual Sampling of Petroleum and Petroleum Products, for §72.7 of this part.

(10) ASTM D4294–90, Standard Test Method for Sulfur in Petroleum Products by Energy-Dispersive X-Ray Fluorescence Spectroscopy, for §72.7 of this part.

(b) [Reserved]

[58 FR 3650, Jan. 11, 1993, as amended at 60 FR 26526, May 17, 1995]

Subpart B—Designated Representative

§72.20 Authorization and responsibilities of the designated representative.

(a) Except as provided under §72.22, each affected source, including all affected units at the source, shall have one and only one designated representative, with regard to all matters under

the Acid Rain Program concerning the source or any affected unit at the source.

(b) Upon receipt by the Administrator of a complete certificate of representation, the designated representative of the source shall represent and, by his or her actions, inactions, or submissions, legally bind each owner and operator of the affected source represented and each affected unit at the source in all matters pertaining to the Acid Rain Program, not withstanding any agreement between the designated representative and such owners and operators. The owners and operators shall be bound by any order issued to the designated representative by the Administrator, the permitting authority, or a court.

(c) The designated representative shall be selected and act in accordance with the certifications set forth in § 72.24(a) (4), (5), (7), and (9).

(d) No Acid Rain permit shall be issued to an affected source, nor shall any allowance transfer be recorded for an Allowance Tracking System account of an affected unit at a source, until the Administrator has received a complete certificate of representation for the designated representative of the source and the affected units at the source.

§ 72.21 Submissions.

(a) Each submission under the Acid Rain Program shall be submitted, signed, and certified by the designated representative for all sources on behalf of which the submission is made.

(b) In each submission under the Acid Rain Program, the designated representative shall certify, by his or her signature:

(1) The following statement, which shall be included verbatim in such submission: ''I am authorized to make this submission on behalf of the owners and operators of the affected source or affected units for which the submission is made.''

(2) The following statement, which shall be included verbatim in such submission: ''I certify under penalty of law that I have personally examined, and am familiar with, the statements and information submitted in this document and all its attachments. Based on my inquiry of those individuals with primary responsibility for obtaining the information, I certify that the statements and information are to the best of my knowledge and belief true, accurate, and complete. I am aware that there are significant penalties for submitting false statements and information or omitting required statements and information, including the possibility of fine or imprisonment.''

(c) The Administrator and the permitting authority shall accept or act on a submission made on behalf of owners or operators of an affected source and an affected unit only if the submission has been made, signed, and certified in accordance with paragraphs (a) and (b) of this section.

(d)(1) The designated representative of a source shall serve notice on each owner and operator of the source and of an affected unit at the source:

(i) By the date of submission, of any Acid Rain Program submissions by the designated representative and

(ii) Within 10 business days of receipt of a determination, of any written determination by the Administrator or the permitting authority,

(iii) Provided that the submission or determination covers the source or the unit.

(2) The designated representative of a source shall provide each owner and operator of an affected unit at the source a copy of any submission or determination under paragraph (d)(1) of this section, unless the owner or operator expressly waives the right to receive such a copy.

(e) The provisions of this section shall apply to a submission made under parts 73, 74, 75, 76, 77, and 78 of this chapter only if it is made or signed or required to be made or signed, in accordance with parts 73, 74, 75, 76, 77, and 78 of this chapter, by:

(1) The designated representative; or

(2) The authorized account representative or alternate authorized account representative of a unit account.

[58 FR 3650, Jan. 11, 1993, as amended at 60 FR 17113, Apr. 4, 1995]

§72.22 Alternate designated representative.

(a) The certificate of representation may designate one and only one alternate designated representative, who may act on behalf of the designated representative. The agreement by which the alternate designated representative is selected shall include a procedure for the owners and operators of the source and affected units at the source to authorize the alternate designated representative to act in lieu of the designated representative.

(b) Upon receipt by the Administrator of a complete certificate of representation that meets the requirements of §72.24 (including those applicable to the alternate designated representative), any action, representation, or failure to act by the alternate designated representative shall be deemed to be an action, representation, or failure to act by the designated representative.

(c) In the event of a conflict, any action taken by the designated representative shall take precedence over any action taken by the alternate designated representative if, in the Administrator's judgement, the actions are concurrent and conflicting.

(d) Except in this section, §72.23, and §72.24, whenever the term ''designated representative'' is used under the Acid Rain Program, the term shall be construed to include the alternate designated representative.

§72.23 Changing the designated representative, alternate designated representative; changes in the owners and operators.

(a) *Changing the designated representative.* The designated representative may be changed at any time upon receipt by the Administrator of a superseding complete certificate of representation. Notwithstanding any such change, all submissions, actions, and inactions by the previous designated representative prior to the time and date when the Administrator receives the superseding certificate of representation shall be binding on the new designated representative and on the owners and operators of the source represented and the affected units at the source.

(b) *Changing the alternate designated representative.* The alternate designated representative may be changed at any time upon receipt by the Administrator of a superseding complete certificate of representation. Notwithstanding any such change, all submissions, actions, and inactions by the previous alternate designated representative prior to the time and date when the Administrator receives the superseding certificate of representation shall be binding on the new alternate designated representative and on the owners and operators of the source represented and the affected units at the source.

(c) *Changes in the owners and operators.* (1) In the event a new owner or operator of an affected source or an affected unit is not included in the list of owners and operators submitted in the certificate of representation, such new owner or operator shall be deemed to be subject to and bound by the certificate of representation, the submissions, actions, and inactions of the designated representative and any alternative designated representative of the source or unit, and the decisions, actions, and inactions of the Administrator and permitting authority, as if the new owner or operator were included in such list.

(2) Within 30 days following any change in the owners and operators of an affected unit, including the addition of a new owner or operator, the designated representative or any alternative designated representative shall submit a revision to the certificate of representation amending the list of owners and operators to include the change.

§72.24 Certificate of representation.

(a) A complete certificate of representation for a designated representative or an alternate designated representative shall include the following elements in a format prescribed by the Administrator:

(1) Identification of the affected source and each affected unit at the source for which the certificate of representation is submitted.

(2) The name, address, and telephone and facsimile numbers of the designated representative and any alternate designated representative.

(3) A list of the owners and operators of the affected source and of each affected unit at the source and all State or local utility regulatory authorities with jurisdiction over each owner.

(4) The following statement: ''I certify that I was selected as the 'designated representative' or 'alternate designated representative,' as applicable, by an agreement binding on the owners and operators of the affected source and each affected unit at the source.''

(5) The following statement: ''I certify that I have given notice of the agreement, selecting me as the 'designated representative' or 'alternate designated representative,' as applicable for the affected source and each affected unit at the source identified in this certificate of representation, daily for a period of one week in a newspaper of general circulation in the area where the source is located or in a State publication designed to give general public notice.''

(6) The following statement: ''I certify that I have all necessary authority to carry out my duties and responsibilities under the Acid Rain Program on behalf of the owners and operators of the affected source and of each affected unit at the source and that each such owner and operator shall be fully bound by my actions, inactions, or submissions.''

(7) The following statement: ''I certify that I shall abide by any fiduciary responsibilities imposed by the agreement by which I was selected as 'designated representative' or 'alternate designated representative', as applicable.''

(8) The following statement: ''I certify that the owners and operators of the affected source and of each affected unit at the source shall be bound by any order issued to me by the Administrator, the permitting authority, or a court regarding the source or unit.''

(9) The following statement: ''Where there are multiple holders of a legal or equitable title to, or a leasehold interest in, an affected unit, or where a utility or industrial customer purchases power from an affected unit under life-of-the-unit, firm power contractual arrangements, I certify that:

(i) ''I have given a written notice of my selection as the 'designated representative' or 'alternate designated representative', as applicable, and of the agreement by which I was selected to each owner and operator of the affected source and of each affected unit at the source; and

(ii) ''Allowances and proceeds of transactions involving allowances will be deemed to be held or distributed in proportion to each holder's legal, equitable, leasehold, or contractual reservation or entitlement or, if such multiple holders have expressly provided for a different distribution of allowances by contract, that allowances and the proceeds of transactions involving allowances will be deemed to be held or distributed in accordance with the contract.''

(10) If there is an alternate designated representative, the following statement: ''The agreement by which I was selected as the alternate designated representative includes a procedure for the owners and operators of the source and affected units at the source to authorize the alternate designated representative to act in lieu of the designated representative.''

(11) The signature of the designated representative and any alternate designated representative and the date signed.

(b) Unless otherwise required by the Administrator or the permitting authority, documents of agreement or notice referred to in the certificate of representation shall not be submitted to the Administrator or the permitting authority. Neither the Administrator nor the permitting authority shall be under any obligation to review or evaluate the sufficiency of such documents, if submitted.

§ 72.25 Objections.

(a) Once a complete certificate of representation has been submitted in accordance with § 72.24, the Administrator will rely on the certificate of representation unless and until a superseding complete certificate is submitted to the Administrator.

(b) Except as provided in §72.23, no objection or other communication submitted to the Administrator or the permitting authority concerning the authorization, or any submission, action or inaction, of the designated representative shall affect any submission, action, or inaction of the designated representative, or the finality of any decision by the Administrator or permitting authority, under the Acid Rain Program. In the event of such communication, the Administrator and the permitting authority are not required to stay any allowance transfer, any submission, or the effect of any action or inaction under the Acid Rain Program.

(c) Neither the Administrator nor any permitting authority will adjudicate any private legal dispute concerning the authorization or any submission, action, or inaction of any designated representative, including private legal disputes concerning the proceeds of allowance transfers.

Subpart C—Acid Rain Permit Applications

§72.30 Requirement to apply.

(a) *Duty to apply*. The designated representative of any source with an affected unit shall submit a complete Acid Rain permit application by the applicable deadline in paragraphs (b) and (c) of this section, and the owners and operators of such source and any affected unit at the source shall not operate the source or unit without a permit that states its Acid Rain program requirements.

(b) *Deadlines.* (1) *Phase 1.* (i) The designated representative shall submit a complete Acid Rain permit application governing an affected unit during Phase I to the Administrator on or before February 15, 1993 for:

(A) Any source with such a unit under §72.6(a)(1); and

(B) Any source with such a unit under §72.6(a) (2) or (3) that is designated a substitution or compensating unit in a substitution plan or reduced utilization plan submitted to the Administrator for approval or conditional approval.

(ii) Notwithstanding paragraph (b)(1)(i) of this section, if a unit at a source not previously permitted is designated a substitution or compensating unit in a submission requesting revision of an existing Acid Rain permit, the designated representative of the unit shall submit a complete Acid Rain permit application on the date that the submission requesting the revision is made.

(2) *Phase II.* (i) For any source with an existing unit under §72.6(a)(2), the designated representative shall submit a complete Acid Rain permit application governing such unit during Phase II to the permitting authority on or before January 1, 1996.

(ii) For any source with a new unit under §72.6(a)(3)(i), the designated representative shall submit a complete Acid Rain permit application governing such unit to the permitting authority at least 24 months before the later of January 1, 2000 or the date on which the unit commences operation.

(iii) For any source with a unit under §72.6(a)(3)(ii), the designated representative shall submit a complete Acid Rain permit application governing such unit to the permitting authority at least 24 months before the later of January 1, 2000 or the date on which the unit begins to serve a generator with a nameplate capacity greater than 25 MWe.

(iv) For any source with a unit under §72.6(a)(3)(iii), the designated representative shall submit a complete Acid Rain permit application governing such unit to the permitting authority at least 24 months before the later of January 1, 2000 or the date on which the auxiliary firing commences operation.

(v) For any source with a unit under §72.6(a)(3)(iv), the designated representative shall submit a complete Acid Rain permit application governing such unit to the permitting authority before the later of January 1, 1998 or March 1 of the year following the three calendar year period in which the unit sold to a utility power distribution system an annual average of more than one-third of its potential electrical output capacity and more than 219,000 MWe-hrs actual electric output (on a gross basis).

(vi) For any source with a unit under § 72.6(a)(3)(v), the designated representative shall submit a complete Acid Rain permit application governing such unit to the permitting authority before the later of January 1, 1998 or March 1 of the year following the calendar year in which the facility fails to meet the definition of qualifying facility.

(vii) For any source with a unit under § 72.6(a)(3)(vi), the designated representative shall submit a complete Acid Rain permit application governing such unit to the permitting authority before the later of January 1, 1998 or March 1 of the year following the calendar year in which the facility fails to meet the definition of an independent power production facility.

(viii) For any source with a unit under § 72.6(a)(3)(vii), the designated representative shall submit a complete Acid Rain permit application governing such unit to the permitting authority before the later of January 1, 1998 or March 1 of the year following the three calendar year period in which the incinerator consumed 20 percent or more fossil fuel (on a Btu basis).

(3) *Acid Rain Compliance Option Deadlines.* The deadlines for applying for approval of any Acid Rain compliance options shall be the deadlines specified in the relevant section of subpart D of this part and in section 407 of the Act and regulations implementing section 407 of the Act.

(c) *Duty to reapply.* The designated representative shall submit a complete Acid Rain permit application for each source with an affected unit at least 6 months prior to the expiration of an existing Acid Rain permit governing the unit during Phase II or an opt-in permit governing an opt-in source or such longer time as may be approved under part 70 of this chapter that ensures that the term of the existing permit will not expire before the effective date of the permit for which the application is submitted.

(d) The original and three copies of all permit applications for Phase I and where the Administrator is the permitting authority, for Phase II, shall be submitted to the EPA Regional Office for the Region where the affected source is located. The original and three copies of all permit applications for Phase II, where the Administrator is not the permitting authority, shall be submitted to the State permitting authority for the State where the affected source is located.

[58 FR 3650, Jan. 11, 1993, as amended at 58 FR 15649, Mar. 23, 1993; 60 FR 17113, Apr. 4, 1995]

§ 72.31 Information requirements for Acid Rain permit applications.

A complete Acid Rain permit application shall include the following elements in a format prescribed by the Administrator:

(a) Identification of the affected source for which the permit application is submitted;

(b) Identification of each Phase I unit at the source for which the permit application is submitted for Phase I or each Phase II unit at the source for which the permit application is submitted for Phase II;

(c) A complete compliance plan for each unit, in accordance with subpart D of this part;

(d) The standard requirements under § 72.9; and

(e) If the Acid Rain permit application is for Phase II and the unit is a new unit, the date that the unit has commenced or will commence operation and the deadline for monitor certification.

§ 72.32 Permit application shield and binding effect of permit application.

(a) Once a designated representative submits a timely and complete Acid Rain permit application, the owners and operators of the affected source and the affected units covered by the permit application shall be deemed in compliance with the requirement to have an Acid Rain permit under § 72.9(a)(2) and § 72.30(a); *provided* that any delay in issuing an Acid Rain permit is not caused by the failure of the designated representative to submit in a complete and timely fashion supplemental information, as required by the permitting authority, necessary to issue a permit.

(b) Prior to the earlier of the date on which an Acid Rain permit is issued subject to administrative appeal under part 78 of this chapter or is issued as a

final agency action subject to judicial review, an affected unit governed by and operated in accordance with the terms and requirements of a timely and complete Acid Rain permit application shall be deemed to be operating in compliance with the Acid Rain Program.

(c) A complete Acid Rain permit application shall be binding on the owners and operators and the designated representative of the affected source and the affected units covered by the permit application and shall be enforceable as an Acid Rain permit from the date of submission of the permit application until the issuance or denial of an Acid Rain permit covering the units and subject to administrative appeal, where the Administrator is the permitting authority, or the issuance or denial of such permit as a final agency action subject to judicial review, where the State is the permitting authority.

§72.33 Identification of dispatch system.

(a) Every Phase I unit shall be treated as part of a dispatch system for purposes of §§72.91 and 72.92 in accordance with this section.

(b)(1) The designated representatives of all affected units in a group of all units and generators that are interconnected and centrally dispatched and that are included in the same utility system, holding company, or power pool, may jointly submit to the Administrator a complete identification of dispatch system.

(2) Except as provided in paragraph (f) of this section, each unit or generator may be included in only one dispatch system.

(3) Any identification of dispatch system must be submitted by January 30 of the first year for which the identification is to be in effect.

(c) A complete identification of dispatch system shall include the following elements in a format prescribed by the Administrator:

(1) The name of the dispatch system.

(2) The list of all units and generators (including sulfur-free generators) in the dispatch system.

(3) The first calendar year for which the identification is to be in effect.

(4) The following statement: ''I certify that, except as otherwise required under a petition as approved under 40 CFR 72.33(f), the units and generators listed herein are and will continue to be interconnected and centrally dispatched, and will be treated as a dispatch system under 40 CFR 72.91 and 72.92, during the period that this identification of dispatch system is in effect. During such period, all information concerning these units and generators and contained in any submissions under 40 CFR 72.91 and 72.92 by me and the other designated representatives of these units shall be consistent and shall conform with the data in the dispatch system data reports under 40 CFR 72.92(b). I am aware of, and will comply with, the requirements imposed under 40 CFR 72.33(e)(2).''

(5) The signatures of the designated representative for each affected unit in the dispatch system.

(d) In order to change a unit's current dispatch system, complete identifications of dispatch system shall be submitted for the unit's current dispatch system and the unit's new dispatch system, reflecting the change.

(e)(1) Any unit or generator not listed in a complete identification of dispatch system that is in effect shall treat its utility system as its dispatch system and, if such unit or generator is listed in the NADB, shall treat the utility system reported under the data field ''UTILNAME'' of the NADB as its utility system.

(2) During the period that the identification of dispatch system is in effect all information that concerns the units and generators in a given dispatch system and that is contained in any submissions under §§72.91 and 72.92 by designated representative of these units shall be consistent and shall conform with the data in the dispatch system data reports under §72.92(b). If this requirement is not met, the Administrator may reject all such submissions and require the designated representatives to make the submissions under §§72.91 and 72.92 (including the dispatch system data report) treating the utility system of each unit or generator as its respective dispatch system and treating the identification of dispatch system as no longer in effect.

(f)(1) Notwithstanding paragraph (e)(1) of this section or any submission of an identification of dispatch system under paragraphs (b) or (d) of this section, the designated representative of a Phase I unit with two or more owners may petition the Administrator to treat, as the dispatch system for an owner's portion of the unit, the dispatch system of another unit.

(i) The owner's portion of the unit shall be based on one of the following apportionment methods:

(A) *Owner's share of the unit's capacity in 1985–1987.* Under this method, the baseline of the owner's portion of the unit shall equal the baseline of the unit multiplied by the average of the owner's percentage ownership of the capacity of the unit for each year during 1985–1987. The actual utilization of the owner's portion of the unit for a year in Phase I shall equal the actual utilization of the unit for the year that is attributed to the owner.

(B) *Owner's share of the unit's baseline.* Under this method, the baseline of the owner's portion of the unit shall equal the average of the unit's annual utilization in 1985–1987 that is attributed to the owner. The actual utilization of the owner's portion of the unit for a year in Phase I shall equal the actual utilization of the unit for the year that is attributed to the owner.

(ii) The annual or actual utilization of a unit shall be attributed, under paragraph (f)(1)(i) of this section, to an owner of the unit using accounting procedures consistent with those used to determine the owner's share of the fuel costs in the operation of the unit during the period for which the annual or actual utilization is being attributed.

(iii) Upon submission of the petition, the designated representative may not change the election of the apportionment method or the baseline of the owner's portion of the unit.

The same apportionment method must be used for all portions of the unit for all years in Phase I for which any petition under paragraph (f)(1) of this section is approved and in effect.

(2) The petition under paragraph (f)(1) of this section shall be submitted by January 30 of the first year for which the dispatch system proposed in the petition will take effect, if approved. A complete petition shall include the following elements in a format prescribed by the Administrator:

(i) The election of the apportionment method under paragraph (f)(1)(i) of this section.

(ii) The baseline of the owner's portion of the unit and the baseline of any other owner's portion of the unit for which a petition under paragraph (f)(1) of this section has been approved or has been submitted (and not disapproved) and a demonstration that the sum of such baselines and the baseline of any remaining portion of the unit equals 100 percent of the baseline of the unit. The designated representative shall also submit, upon request, either:

(A) Where the unit is to be apportioned under paragraph (f)(1)(i)(A) of this section, documentation of the average of the owner's percentage ownership of the capacity of the unit for each year during 1985–1987; or

(B) Where the unit is to be apportioned under paragraph (f)(1)(i)(B) of this section, documentation showing the attribution of the unit's utilization in 1985, 1986, and 1987 among the portions of the unit and the calculation of the annual average utilization for 1985–1987 for the portions of the unit.

(iii) The name of the proposed dispatch system and a list of all units (including portions of units) and generators in that proposed dispatch system and, upon request, documentation demonstrating that the owner's portion of the unit, along with the other units in the proposed dispatch system, are a group of all units and generators that are interconnected and centrally dispatched by a single utility company, the service company of a single holding company, or a single power pool.

(iv) The following statement, signed by the designated representatives of all units in the proposed dispatch system: ''I certify that the units and generators in the dispatch system proposed in this petition are and will continue to be interconnected and centrally dispatched, and will be treated as a dispatch system under 40 CFR 72.91 and 72.92, during the period that this petition, as approved, is in effect.''

(v) The following statement, signed by the designated representatives of all

units in all dispatch systems that will include any portion of the unit if the petition is approved: ''During the period that this petition, if approved, is in effect, all information that concerns the units and generators in any dispatch system including any portion of the unit apportioned under the petition and that is contained in any submissions under 40 CFR 72.91 and 72.92 by me and the other designated representatives of these units shall be consistent and shall conform to the data in the dispatch system data reports under 40 CFR 72.92(b). I am aware of, and will comply with, the requirements imposed under 40 CFR 72.33(f) (4) and (5).''

(3)(i) The Administrator will approve in whole, in part, or with changes or conditions, or deny the petition under paragraph (f)(1) of this section within 90 days of receipt of the petition. The Administrator will treat the petition, as changed or conditioned upon approval, as amending any identification of dispatch system that is submitted prior to the approval and includes any portion of the unit for which the petition is approved. Where any portion of a unit is not covered by an approved petition, that remaining portion of the unit shall continue to be part of the unit's dispatch system.

(ii) In approving the petition, the Administrator will determine, on a case-by-case basis, the proper calculation and treatment, for purposes of the reports required under §§ 72.91 and 72.92, of plan reductions and compensating generation provided to other units.

(4) The designated representative for the unit for which a petition is approved under paragraph (f)(3) of this section and the designated representatives of all other units included in all dispatch systems that include any portion of the unit shall submit all annual compliance certification reports, dispatch system data reports, and other reports required under §§ 72.91 and 72.92 treating, as a separate Phase I unit, each portion of the unit for which a petition is approved under paragraph (f)(3) of this section and the remaining portion of the unit. The reports shall include all required calculations and demonstrations, treating each such portion of the unit as a separate Phase I unit. Upon request, the designated representatives shall demonstrate that the data in all the reports under §§ 72.91 and 72.92 has been properly attributed or apportioned among the portions of the unit and the dispatch systems and that there is no undercounting or double-counting with regard to such data.

(i) The baseline of each portion of the unit for which a petition is approved shall be determined under paragraphs (f)(1) (i) and (ii) of this section. The baseline of the remaining portion of such unit shall equal the baseline of the unit less the sum of the baselines of any portions of the unit for which a petition is approved.

(ii) The actual utilization of each portion of the unit for which a petition is approved shall be determined under paragraphs (f)(l) (i) and (ii) of this section. The actual utilization of the remaining portion of such unit shall equal the actual utilization of the unit less the sum of the actual utilizations of any portions of the unit for which a petition is approved. Upon request, the designated representative of the unit shall demonstrate in the annual compliance certification report that the requirements concerning calculation of actual utilization under paragraph (f)(1)(ii) and any requirements established under paragraph (f)(3) of this section are met.

(iii) Except as provided in paragraph (f)(5) of this section, the designated representative shall surrender for deduction the number of allowances calculated using the formula in § 72.92(c) and treating, as a separate Phase I unit, each portion of unit for which a petition is approved under paragraph (f)(3) of this section and the remaining portion of the unit.

(5) In the event that the designated representatives fail to make all the proper attributions, apportionments, calculations, and demonstrations under paragraph (f)(4) of this section and §§ 72.91 and 72.92, the Administrator may require that:

(i) All portions of the unit be treated as part of the dispatch system of the unit in accordance with paragraph (e)(1) of this paragraph and any identification of dispatch system submitted under paragraph (b) or (d) of this section;

(ii) The designated representatives make all submissions under §§ 72.91 and 72.92 (including the dispatch system data report), treating the entire unit as a single Phase I unit, in accordance with paragraph (e)(1) of this paragraph and any identification of dispatch system submitted under paragraph (b) or (d) of this section; and

(iii) The designated representative surrender for deduction the number of allowances calculated, consistent with the reports under paragraph (f)(5)(ii) of this section and §§ 72.91 and 72.92, using the formula in § 72.92(c) and treating the entire unit as a single Phase I unit.

(6) The designated representative may submit a notification to terminate an approved petition by January 30 of the first year for which the termination is to take effect. The notification must be signed and certified by the designated representatives of all units included in all dispatch systems that include any portion of the unit apportioned under the petition. Upon receipt of the notification meeting the requirements of the prior two sentences by the Administrator, the approved petition is no longer in effect for that year and the remaining years in Phase I and the designated representatives shall make all submissions under §§ 72.91 and 72.92 treating the petition as no longer in effect for all such years.

(7) Except as expressly provided in paragraphs (f)(1) through (6) of this section or the Administrator's approval of the petition, all provisions of the Acid Rain Program applicable to an affected source or an affected unit shall apply to the entire unit regardless of whether a petition has been submitted or approved, or reports have been submitted, under such paragraphs. Approval of a petition under such paragraphs shall not constitute a determination of the percentage ownership in a unit under any other provision of the Acid Rain Program and shall not change the liability of the owners and operators of an affected unit that has excess emissions under § 72.9(e).

[58 FR 3650, Jan. 11, 1993, as amended at 60 FR 18468, Apr. 11, 1995]

Subpart D—Acid Rain Compliance Plan and Compliance Options

§ 72.40 General.

(a) For each affected unit included in an Acid Rain permit application, a complete compliance plan shall:

(1) For sulfur dioxide emissions, certify that, as of the allowance transfer deadline, the designated representative will hold allowances in the unit's compliance subaccount (after deductions under § 73.34(c) of this chapter) not less than the total annual emissions of sulfur dioxide from the unit. The compliance plan may also specify, in accordance with this subpart, one or more of the Acid Rain compliance options.

(2) For nitrogen oxides emissions, certify that the unit will comply with the applicable limitation established by regulations implementing section 407 of the Act or shall specify one or more Acid Rain compliance options, in accordance with section 407 of the Act and regulations implementing section 407.

(b) *Multi-unit compliance options.* (1) A plan for a compliance option, under § 72.41, 72.42, 72.43, or 72.44 of this part, under § 74.47 of this chapter, or an NO_X averaging plan contained in part 76 of this chapter, that includes units at more than one affected source shall be complete only if:

(i) Such plan is signed and certified by the designated representative for each source with an affected unit governed by such plan; and

(ii) A complete permit application is submitted covering each unit governed by such plan.

(2) A permitting authority's approval of a plan under paragraph (b)(1) of this section that includes units in more than one State shall be final only after every permitting authority with jurisdiction over any such unit has approved the plan with the same modifications or conditions, if any.

(c) *Conditional Approval.* In the compliance plan, the designated representative of an affected unit may propose, in accordance with this subpart, any Acid Rain compliance option for conditional approval, except a Phase I extension plan; *provided* that an Acid Rain compliance option under section 407 of

the Act may be conditionally proposed only to the extent provided in regulations implementing section 407 of the Act.

(1) To activate a conditionally-approved Acid Rain compliance option, the designated representative shall notify the permitting authority in writing that the conditionally-approved compliance option will actually be pursued beginning January 1 of a specified year. If the conditionally approved compliance option includes a plan described in paragraph (b)(1) of this section, the designated representative of each source governed by the plan shall sign and certify the notification. Such notification shall be subject to the limitations on activation under subpart D of this part and regulations implementing section 407 of the Act.

(2) The notification under paragraph (c)(1) of this section shall specify the first calendar year and the last calendar year for which the conditionally approved Acid Rain compliance option is to be activated. A conditionally approved compliance option shall be activated, if at all, before the date of any enforceable milestone applicable to the compliance option. The date of activation of the compliance option shall not be a defense against failure to meet the requirements applicable to that compliance option during each calendar year for which the compliance option is activated.

(3) Upon submission of a notification meeting the requirements of paragraphs (c) (1) and (2) of this section, the conditionally-approved Acid Rain compliance option becomes binding on the owners and operators and the designated representative of any unit governed by the conditionally-approved compliance option.

(4) A notification meeting the requirements of paragraphs (c) (1) and (2) of this section will revise the unit's permit in accordance with §72.83 (administrative permit amendment).

(d) *Termination of compliance option.* (1) The designated representative for a unit may terminate an Acid Rain compliance option by notifying the permitting authority in writing that an approved compliance option will be terminated beginning January 1 of a specified year. If the compliance option includes a plan described in paragraph (b)(1) of this section, the designated representative for each source governed by the plan shall sign and certify the notification. Such notification shall be subject to the limitations on termination under subpart D of this part and regulations implementing section 407 of the Act.

(2) The notification under paragraph (d)(1) of this section shall specify the calendar year for which the termination will take effect.

(3) Upon submission of a notification meeting the requirements of paragraphs (d) (1) and (2) of this section, the termination becomes binding on the owners and operators and the designated representative of any unit governed by the Acid Rain compliance option to be terminated.

(4) A notification meeting the requirements of paragraphs (d) (1) and (2) of this section will revise the unit's permit in accordance with §72.83 (administrative permit amendment).

[58 FR 3650, Jan. 11, 1993, as amended at 60 FR 17113, Apr. 4, 1995]

§72.41 Phase I substitution plans.

(a) *Applicability.* This section shall apply during Phase I to the designated representative of:

(1) Any unit listed in Table 1 of §73.10(a) of this chapter; and

(2) Any other existing utility unit that is an affected unit under this part, provided that this section shall not apply to a unit under section 410 of the Act.

(b)(1) The designated representative may include, in the Acid Rain permit application for a unit under paragraph (a)(1) of this section, a substitution plan under which one or more units under paragraph (a)(2) of this section are designated as substitution units, provided that:

(i) Each unit under paragraph (a)(2) of this section is under the control of the owner or operator of each unit under paragraph (a)(1) of this section that designates the unit under paragraph (a)(2) of this section as a substitution unit; and

(ii) In accordance with paragraph (c)(3) of this section, the emissions reductions achieved under the plan shall be the same or greater than would have

been achieved by all units governed by the plan without such plan.

(2) The designated representative of each source with a unit designated as a substitution unit in any plan submitted under paragraph (b)(1) of this section shall incorporate in the permit application each such plan.

(3) The designated representative may submit a substitution plan not later than 90 days, or a notification to activate a conditionally approved plan in accordance with § 72.40(c) not later than 60 days, before the allowance transfer deadline applicable to the first year for which the plan is to take effect.

(c) *Contents of a substitution plan.* A complete substitution plan shall include the following elements in a format prescribed by the Administrator:

(1) Identification of each unit under paragraph (a)(1) of this section and each substitution unit to be governed by the substitution plan. A unit shall not be a substitution unit in more than one substitution plan.

(2) Except where the designated representative requests conditional approval of the plan, the first calendar year and, if known, the last calendar year in which the substitution plan is to be in effect. Unless the designated representative specifies an earlier calendar year, the last calendar year will be deemed to be 1999.

(3) Demonstration that the total emissions reductions achieved under the substitution plan will be equal to or greater than the total emissions reductions that would have been achieved without the plan, as follows:

(i) For each substitution unit:

(A) The unit's baseline.

(B) Each of the following: the unit's 1985 actual SO_2 emissions rate; the unit's 1985 allowable SO_2 emissions rate; the unit's 1989 actual SO_2 emissions rate; the unit's 1990 actual SO_2 emissions rate; and, as of November 15, 1990, the most stringent unit-specific federally enforceable or State enforceable SO_2 emissions limitation covering the unit for 1995–1999. For purposes of determining the most stringent emissions limitation, applicable emissions limitations shall be converted to lbs/mmBtu in accordance with appendix B of this part. Where the most stringent emissions limitation is not the same for every year in 1995–1999, the most stringent emissions limitation shall be stated separately for each year.

(C) The lesser of: the unit's 1985 actual SO_2 emissions rate; the unit's 1985 allowable SO_2 emissions rate; the greater of the unit's 1989 or 1990 actual SO_2 emissions rate; or, as of November 15, 1990, the most stringent unit-specific federally enforceable or State enforceable SO_2 emissions limitation covering the unit for 1995–99. Where the most stringent emissions limitation is not the same for every year during 1995–1999, the lesser of the emissions rates shall be determined separately for each year using the most stringent emissions limitation for that year.

(D) The product of the baseline in paragraph (c)(3)(i)(A) of this section and the emissions rate in paragraph (c)(3)(i)(C) of this section, divided by 2000 lbs/ton. Where the most stringent emissions limitation is not the same for every year during 1995–1999, the product in the prior sentence shall be calculated separately for each year using the emissions rate determined for that year in paragraph (c)(3)(i)(C) of this section.

(ii)(A) The sum of the amounts in paragraph (c)(3)(i)(D) of this section for all substitution units to be governed by the plan. Except as provided in paragraph (c)(3)(ii)(B) of this section, this sum is the total number of allowances available each year under the substitution plan.

(B) Where the most stringent unit-specific federally enforceable or State enforceable SO_2 emissions limitation is not the same for every year during 1995–1999, the sum in paragraph (c)(3)(ii)(A) of this section shall be calculated separately for each year using the amounts calculated for that year in paragraph (c)(3)(i)(D) of this section. Each separate sum is the total number of allowances available for the respective year under the substitution plan.

(iii) Where, as of November 15, 1990, a non-unit-specific federally enforceable or State enforceable SO_2 emissions limitation covers the unit for any year

during 1995–1999, the designated representative shall state each such limitation and propose a method for applying the unit-specific and non-unit-specific emissions limitations under paragraph (d) of this section.

(4) Distribution of substitution allowances. (i) A statement that the allowances in paragraph (c)(3)(ii) of this section are not to be distributed to any units under paragraph (a)(1) of this section that are to be governed by the plan; or

(ii) A list showing any annual distribution of the allowances in paragraph (c)(3)(ii) of this section from a substitution unit to a unit under paragraph (a)(1) of this section that, under the plan, designates the substitution unit.

(5) A demonstration that the substitution plan meets the requirement that each unit under paragraph (a)(2) of this section is under the control of the owner or operator of each unit under paragraph (a)(1) of this section that designates the unit under paragraph (a)(2) of this section as a substitution unit. The demonstration shall be one of the following:

(i) If the unit under paragraph (a)(1) of this section has one or more owners or operators that have an aggregate percentage ownership interest of 50 percent or more in the capacity of the unit under paragraph (a)(2) of this section or the units have a common operator, a statement identifying such owners or operators and their aggregate percentage ownership interest in the capacity of the unit under paragraph (a)(2) of this section or identifying the units' common operator. The designated representative shall submit supporting documentation upon request by the Administrator.

(ii) If the unit under paragraph (a)(1) of this section has one or more owners or operators that have an aggregate percentage ownership interest of at least 10 percent and less than 50 percent in the capacity of the unit under paragraph (a)(2) of this section and the units do not have a common operator, a statement identifying such owners or operators and their aggregate percentage ownership interest in the capacity of the unit under paragraph (a)(2) of this seciton and stating that each such owner or operator has the contractual right to direct the dispatch of the electricity that, because of its ownership interest, it has the right to receive from the unit under paragraph (a)(2) of this section. The fact that the electricity that such owner or operator has the right to receive is centrally dispatched through a power pool will not be the basis for determining that the owner or operator does not have the contractual right to direct the dispatch of such electricity. The designated representative shall submit supporting documentation upon request by the Administrator.

(iii) A copy of an agreement that is binding on the owners and operators of the unit under paragraph (a)(2) of this section and the owners and operators of the unit under paragraph (a)(1) of this section, provides each of the following elements, and is supported by documentation meeting the requirements of paragraph (c)(6) of this section:

(A) The owners and operators of the unit under paragraph (a)(2) of this section must not allow the unit to emit sulfur dioxide in excess of a maximum annual average SO_2 emissions rate (in lbs/mmBtu), specified in the agreement, for each year during the period that the substitution plan is in effect.

(B) The maximum annual average SO_2 emissions rate for the unit under paragraph (a)(2) of this section shall not exceed 70 percent of the lesser of: the unit's 1985 actual SO_2 emissions rate; the unit's 1985 allowable SO_2 emissions rate; the greater of the unit's 1989 or 1990 actual SO_2 emissions rate; the most stringent federally enforceable or State enforceable SO_2 emissions limitation, as of November 15, 1990, applicable to the unit in Phase I; or the lesser of the average actual SO_2 emissions rate or the most stringent federally enforceable or State enforceable SO_2 emissions limitation for the unit for four consecutive quarters that immediately precede the 30-day period ending on the date the substitution plan is submitted to the Administrator. If the unit is covered by a non-unit-specific federally enforceable or State enforceable SO_2 emissions limitation in the four consecutive quarters or, as of November 15, 1990, in Phase I,

the Administrator will determine, on a case-by-case basis, how to apply the non-unit-specific emissions limitation for purposes of determining whether the maximum annual average SO_2 emissions rate meets the requirement of the prior sentence. If a non-unit-specific federally enforceable SO_2 emissions limitation is not different from a non-unit-specific federally enforceable SO_2 emissions limitation that was effective and applicable to the unit in 1985, the Administrator will apply the non-unit-specific SO_2 emissions limitation by using the 1985 allowable SO_2 emissions rate.

(C) For each year that the actual SO_2 emissions rate of the unit under paragraph (a)(2) of this section exceeds the maximum annual average SO_2 emissions rate, the designated representative of the unit under paragraph (a)(1) of this section must surrender allowances for deduction from the Allowance Tracking System account of the unit under paragraph (a)(1) of this section. The designated representative shall surrender allowances authorizing emissions equal to the baseline of the unit under paragraph (a)(2) of this section multiplied by the difference between the actual SO_2 emissions rate of the unit under paragraph (a)(2) of this section and the maximum annual average SO_2 emissions rate and divided by 2000 lbs/ton. The surrender shall be made by the allowance transfer deadline of the year of the exceedance, and the surrendered allowances shall have the same or an earlier compliance use date as the allowances allocated to the unit under paragraph (a)(2) of this section for that year. The designated representative may identify the serial numbers of the allowances to be deducted. In the absence of such identification, allowances will be deducted on a first-in, first-out basis under § 73.35(c)(2) of this chapter.

(D) The unit under paragraph (a)(2) of this section and the unit under paragraph (a)(1) of this section shall designate a common designated representative during the period that the substitution plan is in effect. Having a common alternate designated representative shall not satisfy the requirement in the prior sentence.

(E) Except as provided in paragraph (c)(6)(i) of this section, the actual SO_2 emissions rate for any year and the average actual SO_2 emissions rate for any period shall be determined in accordance with part 75 of this chapter.

(6) A demonstration under paragraph (c)(5)(iii) of this section shall include the following supporting documentation:

(i) The calculation of the average actual SO_2 emissions rate and the most stringent federally enforceable or State enforceable SO_2 emissions limitation for the unit for the four consecutive quarters that immediately preceded the 30-day period ending on the date the substitution plan is submitted to the Administrator. To the extent that the four consecutive quarters include a quarter prior to January 1, 1995, the SO_2 emissions rate for the quarter shall be determined applying the methodology for calculating SO_2 emissions set forth in appendix C of this part. This methodology shall be applied using data submitted for the quarter to the Secretary of Energy on United States Department of Energy Form 767 or, if such data has not been submitted for the quarter, using the data prepared for such submission for the quarter.

(ii) A description of the actions that will be taken in order for the unit under paragraph (a)(2) of this section to comply with the maximum annual average SO_2 emissions rate under paragraph (c)(5)(iii) of this section.

(iii) A description of any contract for implementing the actions described in paragraph (c)(6)(ii) of this section that was executed before the date on which the agreement under paragraph (c)(5)(iii) of this section is executed. The designated representative shall state the execution date of each such contract and state whether the contract is expressly contingent on the agreement under paragraph (c)(5)(iii) of this section.

(iv) A showing that the actions described under paragraph (c)(6)(ii) of this section will not be implemented during Phase I unless the unit is approved as a substitution unit.

(7) The special provisions in paragraph (e) of this section.

(d) *Administrator's action.* (1) If the Administrator approves a substitution plan, he or she will allocate allowances to the Allowance Tracking System accounts of the units under paragraph (a)(1) of this section and substitution units, as provided in the approved plan, upon issuance of an Acid Rain permit containing the plan, except that if the substitution plan is conditionally approved, the allowances will be allocated upon revision of the permit to activate the plan.

(2) In no event shall allowances be allocated to a substitution unit, under an approved substitution plan, for any year in excess of the sum calculated and applicable to that year under paragraph (c)(3)(ii) of this section, as adjusted by the Administrator in approving the plan.

(3) Where, as of November 15, 1990, a non-unit-specific federally enforceable or State enforceable SO_2 emissions limitation covers the unit for any year during 1995–1999, the Administrator will specify on a case-by-case basis a method for using unit-specific and non-unit-specific emissions limitations in allocating allowances to the substitution unit. The specified method will not treat a non-unit-specific emissions limitation as a unit-specific emissions limitation and will not result in substitution units retaining allowances allocated under paragraph (d)(1) of this section for emissions reductions necessary to meet a non-unit- specific emissions limitation. Such method may require an end-of-year review and the adjustment of the allowances allocated to the substitution unit and may require the designated representative of the substitution unit to surrender allowances by the allowance transfer deadline of the year that is subject to the review. Any surrendered allowances shall have the same or an earlier compliance use date as the allowances originally allocated for the year, and the designated representative may identify the serial numbers of the allowances to be deducted. In the absence of such identification, such allowances will be deducted on a first-in, first-out basis under § 73.35(c)(2) of this chapter.

(e) *Special provisions*—(1) *Emissions Limitations.* (i) Each substitution unit governed by an approved substitution plan shall become a Phase I unit from January 1 of the year for which the plan takes effect until January 1 of the year for which the plan is no longer in effect or is terminated. The designated representative of a substitution unit shall surrender allowances, and the Administrator will deduct allowances, in accordance with paragraph (d)(3) of this section.

(ii) Each unit under paragraph (a)(1) of this section, and each substitution unit, governed by an approved substitution plan shall be subject to the Acid Rain emissions limitations for nitrogen oxides in accordance with section 407 of the Act and regulations implementing section 407 of the Act.

(iii) Where an approved substitution plan includes a demonstration under paragraphs (c)(5)(iii) and (c)(6) of this section.

(A) The owners and operators of the substitution unit covered by the demonstration shall implement the actions described under paragraph (c)(6)(ii) of this section, as adjusted by the Administrator in approving the plan or in revising the permit. The designated representative may submit proposed permit revisions changing the description of the actions to be taken in order for the substitution unit to achieve the maximum annual average SO_2 emissions rate under the approved plan and shall include in any such submission a showing that the actions in the changed description will not be implemented during Phase I unless the unit remains a substitution unit. The permit revision will be treated as an administrative amendment, except where the Administrator determines that the change in the description alters the fundamental nature of the actions to be taken and that public notice and comment will contribute to the decision-making process, in which case the permit revision will be treated as a permit modification or, at the option of the designated representative, a fast-track modification.

(B) The designated representative of the unit under paragraph (a)(1) of this section shall surrender allowances, and theAdministrator will deduct allowances, in accordance with paragraph

(c)(5)(iii)(C) of this section. The surrender and deduction of allowances as required under the prior sentence shall be the only remedy under the Act for a failure to meet the maximum annual average SO_2 emissions rate, provided that, if such deduction of allowance results in excess emissions, the remedies for excess emissions shall be fully applicable.

(2) *Liability*. The owners and operators of a unit governed by an approved substitution plan shall be liable for any violation of the plan or this section at that unit or any other unit that is the first unit's substitution unit or for which the first unit is a substitution unit under the plan, including liability for fulfilling the obligations specified in part 77 of this chapter and section 411 of the Act.

(3) *Termination*. (i) A substitution plan shall be in effect only in Phase I for the calendar years specified in the plan or until the calendar year for which a termination of the plan takes effect, provided that no substitution plan shall be terminated, and no unit shall be de-designated as a substitution unit, before the end of Phase I if the substitution unit serves as a control unit under a Phase I extension plan.

(ii) To terminate a substitution plan for a given calendar year prior to the last year for which the plan was approved:

(A) A notification to terminate in accordance with § 72.40(d) shall be submitted no later than 60 days before the allowance transfer deadline applicable to the given year; and

(B) In the notification to terminate, the designated representative of each unit governed by the plan shall state that he or she surrenders for deduction from the unit's Allowance Tracking System account allowances equal in number to, and with the same or an earlier compliance use date as, those allocated under paragraph (d)(1) of this section for all calendar years for which the plan is to be terminated. The designated representative may identify the serial numbers of the allowances to be deducted. In the absence of such identification, allowances will be deducted on a first-in, first-out basis under § 73.35(c)(2) of this chapter.

(iii) If the requirements of paragraph (e)(3)(ii) of this section are met and upon revision of the permit to terminate the substitution plan, the Administrator will deduct the allowances specified in paragraph (e)(3)(ii)(B) of this section. No substitution plan shall be terminated, and no unit shall be de-designated as a Phase I unit, unless such deduction is made.

(iv)(A) If there is a change in the ownership interest of the owners or operators of any unit under a substitution plan approved as meeting the requirements of paragraph (c)(5)(i) or (ii) of this section or a change in such owners' or operators' right to direct dispatch of electricity from a substitution unit under such a plan and the demonstration under paragraph (c)(5)(i) or (ii) of this section cannot be made, then the designated representatives of the units governed by this plan shall submit a notification to terminate the plan so that the plan will terminate as of January 1 of the calendar year during which the change is made.

(B) Where a substitution plan is approved as meeting the requirements of paragraph (c)(5)(iii) of this section, if there is a change in the agreement under paragraph (c)(5)(iii) of this section and a demonstration that the agreement, as changed, meets the requirements of paragraph (c)(5)(iii) cannot be made, then the designated representative of the units governed by the plan shall submit a notification to terminate the plan so that the plan will terminate as of January 1 of the calendar year during which the change is made. Where a substitution plan is approved as meeting the requirements of paragraph (c)(5)(iii) of this section, if the requirements of the first sentence of paragraph (e)(1)(iii)(A) of this section are not met during a calendar year, then the designated representative of the units governed by the plan shall submit a notification to terminate the plan so that the plan will terminate as of January 1 of such calendar year.

(C) If the plan is not terminated in accordance with paragraphs (e)(3)(iv)(A) or (B) of this section, the

Administrator, on his or her own motion, will terminate the plan and deduct the allowances required to be surrendered under paragraph (e)(3)(ii) of this section.

(D) Where a substitution unit and the Phase I unit designating the substitution unit in an approved substitution plan have a common owner, operator, or designated representative during a year, the plan shall not be terminated under paragraphs (e)(3)(iv)(A), (B), or (C) of this section with regard to the substitution unit if the year is as specified in paragraph (e)(3)(iv)(D)(*1*) or (*2*) of this section and the unit received from the Administrator for the year, under the Partial Settlement in *Environmental Defense Fund* v. *Carol M. Browner*, No. 93–1203 (D.C. Cir. 1993) (signed May 4, 1993), a total number of allowances equal to the unit's baseline multiplied by the lesser of the unit's 1985 actual SO_2 emissions rate or 1985 allowable SO_2 emissions rate.

(*1*) Except as provided in paragraph (e)(3)(iv)(D)(*2*) of this section, paragraph (e)(3)(iv)(D) of this section shall apply to the first year in Phase I for which the unit is and remains an active substitution unit.

(*2*) If the unit has a Group 1 boiler under part 76 of this chapter and is and remains an active substitution unit during 1995, paragraph (e)(3)(iv)(D) of this section shall apply to 1995 and to the second year in Phase I for which the unit is and remains an active substitution unit.

(*3*) If there is a change in the owners, operators, or designated representative of the substitution unit or the Phase I unit during a year under paragraph (e)(3)(iv)(D)(*1*) or (*2*) of this section and, with the change, the units do not have a common owner, operator, or designated representative, then the designated representatives for such units shall submit a notification to terminate the plan so that the plan will terminate as of January 1 of the calendar year during which the change is made. If the plan is not terminated in accordance with the prior sentence, the Administrator, on his or her own motion, will terminate the plan and deduct the allowances required to be surrendered under paragraph (e)(3)(ii) of this section.

[58 FR 3650, Jan. 11, 1993, as amended at 58 FR 40747, July 30, 1993; 59 FR 60230, 60238, Nov. 22, 1994]

§72.42 Phase I extension plans.

(a) *Applicability*. (1) This section shall apply to any designated representative seeking a 2-year extension of the deadline for meeting Phase I sulfur dioxide emissions reduction requirements at any of the following types of units by applying for allowances from the Phase I extension reserve:

(i) A unit listed in Table 1 of §73.10(a) of this chapter;

(ii) A unit designated as a substitution unit in accordance with §72.41; or

(iii) A unit designated as a compensating unit in accordance with §72.43, except a compensating unit that is a new unit.

(2) A unit for which a Phase I extension is sought shall be either:

(i) A control unit, which shall be a unit under paragraph (a)(1) of this section and at which qualifying Phase I technology shall commence operation on or after November 15, 1990 but not later than December 31, 1996; or

(ii) A transfer unit, which shall be a unit under paragraph (a)(1)(i) of this section and whose Phase I emissions reduction obligation shall be transferred in whole or in part to one or more control units.

(3) A Phase I extension does not exempt the owner or operator for any unit governed by the Phase I extension plan from the requirement to comply with such unit's Acid Rain emissions limitations for sulfur dioxide.

(b) To apply for a Phase I extension:

(1) The designated representative for each source with a control unit may submit an early ranking application for a Phase I extension plan in person, beginning on the 40th day after publication of this subpart in the FEDERAL REGISTER, between the hours of 9 a.m. and 5 p.m. Eastern Standard Time at Acid Rain Division, Attn: Early Ranking, U.S. Environmental Protection Agency, 501 3rd Street NW., 4th floor, Washington, DC; or send the application by regular mail, certified mail, or overnight delivery service to Acid Rain

Division, Attn: Early Ranking, U.S. Environmental Protection Agency, 6204 J, 401 M Street, SW., Washington, DC 20460.

(2) By February 15, 1993:

(i) The designated representative for each source with a control unit shall submit a Phase I extension plan as a part of the Acid Rain permit application for the source, and

(ii) The designated representative for each source with a unit designated as a transfer unit in any plan submitted under paragraph (b)(2)(i) of this section shall incorporate in the Acid Rain permit application each such plan.

(c) *Contents of early ranking application.* A complete early ranking application shall include the following elements in a format prescribed by the Administrator:

(1) Identification of each control unit. All control units in an application must be located at the same source. If the control unit is not a unit under paragraph (a)(1)(i) of this section, a substitution plan or a reduced utilization plan governing the unit shall be submitted by the deadline for submitting a Phase I permit application.

(2) Identification of each transfer unit. A unit shall not be a transfer unit in more than one early ranking application.

(3) For each control and transfer unit, the total tonnage of sulfur dioxide emitted in 1988 plus the total tonnage of sulfur dioxide emitted in 1989, divided by 2. The 1988 and 1989 tonnage figures shall be consistent with the data filed on EIA form 767 for those years and the conversion methodology specified in Appendix B of this part.

(4) For each control and transfer unit:

(i) The projected annual utilization (in mmBtu) for 1995 multiplied by the projected uncontrolled emissions rate (i.e., the emissions rate in the absence of title IV of the Act) for 1995 (in lbs/mmBtu), divided by 2000 lbs/ton.

(ii) The projected annual utilization (in mmBtu) for 1996 multiplied by the projected uncontrolled emissions rate (i.e., the emissions rate in the absence of title IV of the Act) for 1996 (in lbs/mmBtu), divided by 2000 lbs/ton.

(5) For each control and transfer unit, the number of Phase I extension reserve allowances requested for 1995 and for 1996, not to exceed the difference between:

(i) The lesser of the value for the unit under paragraph (c)(3) of this section and the value for the unit for that year under paragraph (c)(4) of this section, and

(ii) Each unit's baseline multiplied by 2.5 lb/mmBtu, divided by 2000 lbs/ton.

(6) Documentation that the annual emissions reduction obligations transferred from all transfer units to all control units do not exceed those authorized under this section, as follows:

(i) For each control unit, the difference, calculated separately for 1995 and 1996, between:

(A) The control unit's allowance allocation in Table 1 of § 73.10(2) of this chapter, the allocation under § 72.41 if the control unit is a substitution unit, or the allocation under § 72.43 if the control unit is a compensating unit; and

(B) The projected emissions resulting from 90% control after installing the qualifying Phase I technology, i.e., 10% of the projected uncontrolled emissions for the control unit for the year in accordance with paragraph (c)(4) of this section.

(ii) The sum, by year, of the results under paragraph (c)(6)(i) of this section for all control units.

(iii) The sum, by year, of Phase I extension reserve allowances requested for all transfer units.

(iv) A showing that, for each year, the sum under paragraph (c)(6)(ii) of this section is greater than or equal to the sum under paragraph (c)(6)(iii) of this section.

(7) For each control and transfer unit, the projected controlled emissions for 1997, for 1998, and for 1999 calculated as follows:

Projected annual utilization (in mmBtu) multiplied by the projected controlled emission rate (in lbs/mmBtu), divided by 2000 lbs/ton.[1]

[1] In the case of a transfer unit that shares a common stack with a unit not listed in Table 1 of § 73.10(a) of this chapter and whose

(8) For each control unit, the number of Phase I extension reserve allowances requested for 1997, for 1998, and for 1999, calculated as follows:

The unit's baseline multiplied by 1.2 lbs/mmBtu and divided by 2000 lbs/ton, minus the projected controlled emissions (in tons/yr) under paragraph (c)(7) of this section for the given year.

(9) The total of Phase I extension reserve allowances requested for all units in the plan for 1995 through 1999.

(10) With regard to each executed contract for the design engineering and construction of qualifying Phase I technology at each control unit governed by the early ranking application, either a copy of the contract or a certification that the contract is on site at the source and will be submitted to the Administrator upon written request. The contract or contracts may be contingent on the Administrator approving the Phase I extension plan.

(11) For each contract for which a certification is submitted under paragraph (c)(10) of this section, a binding letter agreement, signed and dated by each party and specifying:

(i) The type of qualifying Phase I technology to which the contract applies;

(ii) The parties to the contract;

(iii) The date each party executed the contracts;

(iv) The unit to which the contract applies;

(v) A brief list identifying each provision of the contract;

(vi) Any dates to which the parties agree, including construction completion date; and

(vii) The total dollar amount of the contract.

(12) A vendor certification of the sulfur dioxide removal efficiency guaranteed to be achievable by the qualifying Phase I technology for the type and range of fossil fuels (before any treatment prior to combustion) that will be used at the control unit; *provided* that a vendor certification shall not be a defense against a control unit's failure to achieve 90% control of sulfur dioxide.

(13) The date (not later than December 31, 1996) on which the owners and operators plan to commence operation of the qualifying Phase I technology.

(14) The special provisions of paragraph (f) of this section.

(d) *Contents of Phase I extension plan.* A complete Phase I extension plan shall include the following elements in a format prescribed by the Administrator:

(1) Identification of each unit in the plan.

(2)(i) A statement that the elements in the Phase I extension plan are identical to those in the previously submitted early ranking application for the plan and that such early ranking application is incorporated by reference; or

(ii) All elements that are different from those in the previously submitted early ranking application for the plan and a statement that the early ranking application is incorporated by reference as modified by the newly submitted elements; *provided* that the Phase I extension plan shall not add any new control units or increase the total Phase I extension allowances requested; or

(iii) All elements required for an early ranking application and a statement that no early ranking application for the plan was submitted.

(e) *Administrator's action.* (1) *Early ranking applications.* (i) The Administrator may approve in whole or in part or with changes or conditions, as appropriate, or disapprove an early ranking application.

(ii) The Administrator will act on each early ranking application in the order of receipt.

(iii) The Administrator will determine the order of receipt by the following procedures:

(A) Hand-delivered submissions and mailed submissions will be deemed to have been received on the date they are received by the Administrator; *provided* that all submissions received by the Administrator prior to the 40th day after publication of this subpart in the FEDERAL REGISTER will be deemed received on the 40th day.

(B) All submissions received by the Administrator on the same day will be

---

emissions of sulfur dioxide are not monitored separately or apportioned in accordance with part 75 of this chapter, the projected figures for the transfer unit under paragraph (c)(7) of this section must be for the units combined.

deemed to have been received simultaneously.

(C) The order of receipt of all submissions received simultaneously will be determined by a public lottery if allocation of Phase I extension reserve allowances to each of the simultaneous submissions would result in oversubscription of the Phase I extension reserve.

(iv) Based on the allowances requested under paragraph (c)(9) of this section, as adjusted by the Administrator in approving the early ranking application, the Administrator will award Phase I extension reserve allowances for each complete early ranking application to the extent that allowances that have not been awarded remain in the Phase I extension reserve at the time the Administrator acts on the application. The allowances will be awarded in accordance with the procedures set forth the allocation of reserve allowances in paragraph (e)(3) of this section.

(v) The Administrator's action on an early ranking application shall be conditional on the Administrator's action on a timely and complete Acid Rain permit application that includes a complete Phase I extension plan and, where the plan includes a unit under paragraph (a)(1) (ii) and (iii) of this section, a complete substitution plan or reduced utilization plan, as appropriate.

(vi) Not later than 15 days after receipt of each early ranking application, the Administrator will notify, in writing, the designated representative of each application of the date that the early ranking application was received and one of the following:

(A) The award of allowances if the application was complete and the Phase I extension reserve as not oversubscribed;

(B) A determination that the application was incomplete and is disapproved; or

(C) If the Phase I extension reserve was oversubscribed, a list of the applications received on that date, the number of Phase I extension allowances requested in each application, and the date, time, and location of a lottery to determine the order of receipt for all applications received on that date.

(vii) The date of a lottery for all applications received on a given day will not be earlier than 15 days after the Administrator notifies each designated representative whose applications were received on that date.

(viii) Any early ranking application may be withdrawn from the lottery if a letter signed by the designated representative of each unit governed by the application and requesting withdrawal is received by the Administrator before the lottery takes place.

(2) *Phase I extension plans.* (i) The Administrator will act on each Phase I extension plan in the order that the early ranking application for that plan was received or, if no early ranking application was received, in the order that the Phase I extension plan was received, as determined under paragraph (e)(1)(iii) of this section.

(ii) Based on the allowances requested under paragraph (c)(9) of this section, as adjusted under paragraph (d) of this section and by the Administrator in approving the Phase I extension plan, the Administrator will allocate Phase I extension reserve allowances to the Allowance Tracking System account of each control and transfer unit upon issuance of an Acid Rain permit containing the approved Phase I extension plan. The allowances will be allocated using the procedures set forth in paragraph (e)(3) of this section.

(iii) The Administrator will not approve a Phase I extension plan, even if it meets the requirements of this section, unless unallocated allowances remain in the Phase I extension reserve at the time the Administrator acts on the plan.

(3) *Allowance allocations.* In addition to any allowances allocated in accordance with Table 1 of § 73.10(a) of this chapter and other approved compliance options, the Administrator will allocate Phase I extension reserve allowances to each eligible unit in a Phase I extension plan in the following order.

(i) For 1995, to each control unit in the order in which it is listed in the plan and then to each transfer unit in the order in which it is listed.

(ii) For 1996, to each control unit in the order in which it is listed in the plan and then to each transfer unit in the order in which it is listed.

(iii) For 1997, to each control unit in the order in which it is listed in the plan, then likewise for 1998, and then likewise for 1999.

(iv) The Administrator will allocate any Phase I extension reserve allowances returned to the Administrator to the next Phase I extension plan, in the rank order established under paragraph (e)(1)(iii) of this section, that continues to meet the requirements of this section and this part.

(f) *Special provisions*—(1) *Emissions Limitations*—(i) *Sulfur Dioxide.*

(A) If a control or transfer unit governed by an approved Phase I extension plan emits in 1997, 1998, or 1999 sulfur dioxide in excess of the projected controlled emissions for the unit specified for the year under paragraph (c)(7) of this section as adjusted under paragraph (d) of this section and by the Administrator in approving the Phase I extension plan, the Administrator will deduct allowances equal to such exceedence from the unit's annual allowance allocation in the following calendar year.[2]

(B) Failure to demonstrate at least a 90% reduction of sulfur dioxide in 1997, 1998, or 1999 in accordance with part 75 of this chapter at a control unit governed by an approved Phase I extension plan shall be a violation of this section. In the event of any such violation, in addition to any other liability under the Act, the Administrator will deduct allowances from the control unit's compliance subaccount for the year of the violation. The deduction will be calculated as follows:

Allowances deducted=(1−(percent reduction achieved•90%))×Phase I extension reserve allowances received

where:

''Percent reduction achieved'' is the percent reduction determined in accordance with part 75 of this chapter.

''Phase I extension reserve allowances received'' is the number of Phase I extension reserve allowances allocated for the year under paragraph (e)(2)(ii) of this section.

(ii) *Nitrogen Oxides.*

(A) Beginning on January 1, 1997, each control and transfer unit shall be subject to the Acid Rain emissions limitations for nitrogen oxides.

(B) Notwithstanding paragraph (f)(1)(ii)(A) of this section, a transfer unit shall be subject to the Acid Rain emissions limitations for nitrogen oxides, under section 407 of the Act and regulations implementing section 407 of the Act, beginning on January 1 of any year for which a transfer unit is allocated fewer Phase I extension reserve allowances than the maximum amount that the designated representative could have requested in accordance with paragraph (c)(5) of this section (as adjusted under paragraph (d) of this section and by the Administrator in approving the Phase I extension plan) unless the transfer unit is the last unit allocated Phase I extension reserve allowances under the plan.

(2) *Monitoring requirements.* Each control unit shall comply with the special monitoring requirements for Phase I extension plans in accordance with part 75 of this chapter.

(3) *Reporting requirements.* Each control and transfer unit shall comply with the special reporting requirements for Phase I extension plans in accordance with § 72.93.

(4) *Liability.* The owners and operators of a control or transfer unit governed by an approved Phase I extension plan shall be liable for any violation of the plan or this section at that or any other unit governed by the plan, including liability for fulfilling the obligations specified in part 77 of this chapter and section 411 of the Act.

(5) *Termination.* A Phase I extension plan shall be in effect only in Phase I, and no Phase I extension plan shall be terminated before the end of Phase I. The designated representative may, however, withdraw a Phase I extension plan at any time prior to issuance of the Phase I Acid Rain permit that includes the Phase I extension plan, as adjusted.

[2] In the case of a transfer unit that shares a common stack with a unit not listed in Table 1 of § 73.10(a) of this chapter where the units are not monitored separately or apportioned in accordance with part 75 of this chapter, the combined emissions of both units will be deemed to be the transfer unit's emissions for purposes of applying paragraph (f)(1)(i) of this section.

§ 72.43 Phase I reduced utilization plans.

(a) *Applicability*. This section shall apply to the designated representative of:

(1) Any Phase I unit, including:

(i) Any unit listed in Table 1 of § 73.10(a) of this chapter; and

(ii) Any other unit that becomes a Phase I unit (including any unit designated as a compensating unit under this section or a substitution unit under § 72.41).

(2) Any affected unit that:

(i) Is not otherwise subject to any Acid Rain emissions limitation or emissions reduction requirements during Phase I; and

(ii) Meets the requirement, as set forth in paragraphs (c)(4)(ii) and (d) of this section, that for each year for which the unit is to be covered by the reduced utilization plan, the unit's baseline divided by 2,000 lbs/ton and multiplied by the lesser of the unit's 1985 actual SO_2 emissions rate or 1985 allowable SO_2 emissions rate does not exceed the sum of

(A) The lesser of 10 percent of the amount under paragraph (a)(2)(ii) of this section or 200 tons, plus

(B) The unit's baseline divided by 2,000 lbs/ton and multiplied by the lesser of: The greater of the unit's 1989 or 1990 actual SO_2 emissions rate; or, as of November 15, 1990, the most stringent federally enforceable or State enforceable SO_2 emissions limitation covering the unit for 1995–1999.

(b)(1) The designated representative of any unit under paragraph (a)(1) of this section shall include in the Acid Rain permit application for the unit a reduced utilization plan, meeting the requirements of this section, when the owners and operators of the unit plan to:

(i) Reduce utilization of the unit below the unit's baseline to achieve compliance, in whole or in part, with the unit's Phase I Acid Rain emissions limitations for sulfur dioxide; and

(ii) Accomplish such reduced utilization through one or more of the following:

(A) Shifting generation of the unit to a unit under paragraph (a)(2) of this section or to a sulfur-free generator; or

(B) Using one or more energy conservation measures or improved unit efficiency measures.

(2)(i) Energy conservation measures shall be either demand-side measures implemented after December 31, 1987 in the residence or facility of a customer to whom the unit's utility system sells electricity or supply-side measures implemented after December 31, 1987 in facilities of the unit's utility system.

(ii) The utility system shall pay in whole or in part for the energy conservation measures either directly or, in the case of demand-side measures, through payment to another person who purchases the measure.

(iii) Energy conservation measures shall not include:

(A) Conservation programs that are exclusively informational or educational in nature;

(B) Load management measures that lead to reduction of electric energy demands during a utility's peak generating period, unless kilowatt hour savings can be verified under § 72.92;

or

(C) Utilization of industrial waste gases, unless the designated representative certifies that there is no net increase in sulfur dioxide emissions from such utilization.

(iv) For calendar years when the unit's utility system is a subsidiary of a holding company and the unit's dispatch system is or includes all units that are interconnected and centrally dispatched and included in that holding company, then:

(A) Energy conservation measures shall be either demand-side measures implemented in the residence or facility of a customer to whom any utility system in the holding company sells electricity or supply-side measures implemented in facilities of any utility system in the holding company. Such utility system shall pay in whole or in part for the measures either directly or, in the case of demand-side measures, through payment to another person who purchases the measures.

(B) The limitations in paragraph (b)(2)(iii) of this section shall apply.

(3)(i) Improved unit efficiency measures shall be implemented in the unit after December 31, 1987. Such measures include supply-side measures listed in

appendix A, section 2.1 of part 73 of this chapter.

(ii) The utility system shall pay in whole or in part for the improved unit efficiency measures.

(4) The requirement to submit a reduced utilization plan shall apply in the event that the owners and operators of a Phase I unit decide, at any time during any Phase I calendar year, to rely on the method of compliance in paragraph (b)(1) of this section. In that case, the designated representative shall submit a reduced utilization plan not later than 90 days, or a notification to activate a conditionally approved plan in accordance with § 72.40(c) not later than 60 days, before the allowance transfer deadline applicable to the first year for which the plan is to take effect.

(5) The designated representative of each source with a unit designated as a compensating unit in any plan submitted under paragraphs (b) (1) or (4) of this section shall incorporate by reference in the permit application each such plan.

(c) *Contents of reduced utilization plan.* A complete reduced utilization plan shall include the following elements in a format prescribed by the Administrator:

(1) Identification of each Phase I unit for which the owners and operators plan reduced utilization.

(2) Except where the designated representative requests conditional approval of the plan, the first calendar year and, if known, the last calendar year in which the reduced utilization plan is to be in effect. Unless the designated representative specifies an earlier calendar year, the last calendar year shall be deemed to be 1999.

(3) A statement whether the plan designates a compensating unit or relies on sulfur-free generation, any energy conservation measure, or any improved unit efficiency measure to account for any amount of reduced utilization.

(4) If the plan designates a compensating unit, or relies on sulfur-free generation, to account for any amount of reduced utilization:

(i) Identification of each compensating unit or sulfur-free generator.

(ii) For each compensating unit. (A) Each of the following: The unit's 1985 actual SO_2 emissions rate; the unit's 1985 allowable emissions rate; the unit's 1989 actual SO_2 emissions rate; the unit's 1990 actual SO_2 emissions rate; and, as of November 15, 1990, the most stringent unit-specific federally enforceable or State enforceable SO_2 emissions limitation covering the unit for 1995–1999. For purposes of determining the most stringent emissions limitation, applicable emissions limitations shall be converted to lbs/mmBtu in accordance with appendix B of this part. Where the most stringent emissions limitation is not the same for every year in 1995–1999, the most stringent emissions limitation shall be stated separately for each year.

(B) The unit's baseline divided by 2,000 lbs/ton and multiplied by the lesser of the unit's 1985 actual SO_2 emissions rate or 1985 allowable SO_2 emissions rate.

(C) The unit's baseline divided by 2000 lbs/ton and multiplied by the lesser of: The greater of the unit's 1989 or 1990 actual SO_2 emissions rate; or, as of November 15, 1990, the most stringent unit-specific federally enforceable or State enforceable SO_2 emissions limitation covering the unit for 1995–1999. Where the most stringent emissions limitation is not the same for every year in 1995–1999, the calculation in the prior sentence shall be made separately for each year.

(D) The difference between the amount under paragraph (c)(4)(ii)(B) of this section and the amount under paragraph (c)(4)(ii)(C) of this section. If the difference calculated in the prior sentence for any year exceeds the lesser of 10 percent of the amount under paragraph (c)(4)(ii)(B) of this section or 200 tons, the unit shall not be designated as a compensating unit for the year. Where the most stringent unit-specific federally enforceable or State enforceable SO_2 emissions limitation is not the same for every year in 1995–1999, the difference shall be calculated separately for each year.

(E) The allowance allocation calculated as the amount under paragraph (c)(4)(ii)(B) of this section. If the compensating unit is a new unit, it shall be deemed to have a baseline of zero and shall be allocated no allowances.

(F) Where, as of November 15, 1990, a non-unit-specific federally enforceable or State enforceable SO_2 emissions limitation covers the unit for any year in 1995–1999, the designated representative shall state each such limitation and propose a method for applying unit-specific and non-unit-specific emissions limitations under paragraph (d) of this section.

(iii) For each sulfur-free generator, identification of any other Phase I units that designate the same sulfur-free generator in another plan submitted under paragraph (b) (1) or (4) of this section.

(iv) For each compensating unit or sulfur-free generator not in the dispatch system of the unit reducing utilization under the plan, the system directives or power purchase agreements or other contractual agreements governing the acquisition, by the dispatch system, of the electrical energy that is generated by the compensating unit or sulfur-free generator and on which the plan relies to accomplish reduced utilization. Such contractual agreements shall identify the specific compensating unit or sulfur-free generator from which the dispatch system acquires such electrical energy.

(5) The special provisions in paragraph (f) of this section.

(d) *Administrator's action.* (1) If the Administrator approves the reduced utilization plan, he or she will allocate allowances, as provided in the approved plan, to the Allowance Tracking System account for any designated compensating unit upon issuance of an Acid Rain permit containing the plan, except that, if the plan is conditionally approved, the allowances will be allocated upon revision of the permit to activate the plan.

(2) Where, as of November 15, 1990, a non-unit-specific federally enforceable or State enforceable emissions limitation covers the unit for any year during 1995–1999, the Administrator will specify on a case-by-case basis a method for using unit-specific and non-unit specific emissions limitations in approving or disapproving the compensating unit. The specified method will not treat a non-unit-specific emissions limitation as a unit-specific emissions limitation and will not result in compensating units retaining allowances allocated under paragraph (d)(1) of this section for emissions reductions necessary to meet a non-unit-specific emissions limitation. Such method may require an end-of-year review and the disapproval and de-designation, and adjustment of the allowances allocated to, the compensating unit and may require the designated representative of the compensating unit to surrender allowances by the allowance transfer deadline of the year that is subject to the review. Any surrendered allowances shall have the same or an earlier compliance use date as the allowances originally allocated for the year, and the designated representative may identify the serial numbers of the allowances to be deducted. In the absence of such identification, such allowances will be deducted on a first-in, first-out basis under § 73.35(c)(2) of this chapter.

(e) *Failure to submit a plan.* The designated representative of a Phase I unit will be deemed not to violate, during a Phase I calendar year, the requirement to submit a reduced utilization plan under paragraph (b)(1) or (4) of this section if the designated representative complies with the allowance surrender and other requirements of §§ 72.33, 72.91, and 72.92 of this chapter.

(f) *Special provisions*—(1) *Emissions limitations.* (i) Any compensating unit designated under an approved reduced utilization plan shall become a Phase I unit from January 1 of the calendar year in which the plan takes effect until January 1 of the year for which the plan is no longer in effect or is terminated, except that such unit shall not become subject to the Acid Rain emissions limitations for nitrogen oxides in Phase I under section 407 of the Act and regulations implementing section 407 of the Act.

(ii) The designated representative of any Phase I unit (including a unit governed by a reduced utilization plan relying on energy conservation, improved unit efficiency, sulfur-free generation, or a compensating unit) shall surrender allowances, and the Administrator will deduct or return allowances, in accordance with paragraph (d)(2) of this section and subpart I of this part.

(2) *Reporting requirements.* The designated representative of any Phase I unit (including a unit governed by a reduced utilization plan relying on energy conservation, improved unit efficiency, sulfur-free generation, or a compensating unit) shall comply with the special reporting requirements under §§72.91 and 72.92.

(3) *Liability.* The owners and operators of a unit governed by an approved reduced utilization plan shall be liable for any violation of the plan or this section at that or any other unit governed by the plan, including liability for fulfilling the obligations specified in part 77 of this chapter and section 411 of the Act.

(4) *Termination.* (i) A reduced utilization plan shall be in effect only in Phase I for the calendar years specified in the plan or until the calendar year for which a termination of the plan takes effect; *provided* that no reduced utilization plan that designates a compensating unit that serves as a control unit under a Phase I extension plan shall be terminated, and no such unit shall be de-designated as a compensating unit, before the end of Phase I.

(ii) To terminate a reduced utilization plan for a given calendar year prior to its last year for which the plan was approved:

(A) A notification to terminate in accordance with §72.40(d) shall be submitted no later than 60 days before the allowance transfer deadline applicable to the given year; and

(B) In the notification to terminate, the designated representative of any compensating unit governed by the plan shall state that he or she surrenders for deduction from the unit's Allowance Tracking System account allowances equal in number to, and with the same or an earlier compliance use date as, those allocated under paragraph (d) of this section to each compensating unit for the calendar years for which the plan is to be terminated. The designated representative may identify the serial numbers of the allowances to be deducted. In the absence of such identification, allowances will be deducted on a first-in, first-out basis under §73.35(c)(2) of this chapter.

(iii) If the requirements of paragraph (f)(3)(ii) are met and upon revision of the permit to terminate the reduced utilization plan, the Administrator will deduct the allowances specified in paragraph (f)(3)(ii)(B) of this section. No reduced utilization plan shall be terminated, and no unit shall be de-designated as a Phase I unit, unless such deduction is made.

[58 FR 3650, Jan. 11, 1993, as amended at 59 FR 60230, Nov. 22, 1994; 60 FR 18470, Apr. 11, 1995]

§72.44 Phase II repowering extensions.

(a) *Applicability.* (1) This section shall apply to the designated representative of:

(i) Any existing affected unit that is a coal-fired unit and has a 1985 actual SO_2 emissions rate equal to or greater than 1.2 lbs/mmBtu.

(ii) Any new unit that will be a replacement unit, as provided in paragraph (b)(2) of this section, for a unit meeting the requirements of paragraph (a)(1)(i) of this section.

(iii) Any oil and/or gas-fired unit that has been awarded clean coal technology demonstration funding as of January 1, 1991 by the Secretary of Energy.

(2) A repowering extension does not exempt the owner or operator for any unit governed by the repowering plan from the requirement to comply with such unit's Acid Rain emissions limitations for sulfur dioxide.

(b) The designated representative of any unit meeting the requirements of paragraph (a)(1)(i) of this section may include in the unit's Phase II Acid Rain permit application a repowering extension plan that includes a demonstration that:

(1) The unit will be repowered with a qualifying repowering technology in order to comply with the Phase II emissions limitations for sulfur dioxide; or

(2) The unit will be replaced by a new utility unit that has the same designated representative and that is located at a different site using a qualified repowering technology and the existing unit will be permanently retired from service on or before the date on which the new utility unit commences commercial operation.

(c) In order to apply for a repowering extension, the designated representative of a unit under paragraph (a) of this section shall:

(1) Submit to the permitting authority, by January 1, 1996, a complete repowering extension plan;

(2) Submit to the Administrator, before June 1, 1997, a complete petition for approval of repowering technology; and

(3) If the repowering extension plan is submitted for conditional approval, submit by December 31, 1997, a notification to activate the plan in accordance with § 72.40(c).

(d) *Contents and Review of Petition for Approval of Repowering Technology.* (1) A complete petition for approval of repowering technology shall include the following elements, in a format prescribed by the Administrator, concerning the technology to be used in a plan under paragraph (b) of this section and may follow the repowering technology demonstration protocol issued by the Administrator:

(i) Identification and description of the technology.

(ii) Vendor certification of the guaranteed performance characteristics of the technology, including:

(A) Percent removal and emission rate of each pollutant being controlled;

(B) Overall generation efficiency; and

(C) Information on the state, chemical constituents, and quantities of solid waste generated (including information on land-use requirements for disposal) and on the availability of a market to which any by-products may be sold.

(iii) If the repowering technology is not listed in the definition of a qualified repowering technology in § 72.2, a vendor certification of the guaranteed performance characteristics that demonstrate that the technology meets the criteria specified for non-listed technologies in § 72.2; *provided* that the existence of such guarantee shall not be a defense against the failure to meet the criteria for non-listed technologies.

(2) The Administrator may request any supplemental information that is deemed necessary to review the petition for approval of repowering technology.

(3) The Administrator shall review the petition for approval of repowering technology and, in consultation with the Secretary of Energy, shall make a conditional determination of whether the technology described in the petition is a qualifying repowering technology.

(4) Based on the petition for approval of repowering technology and the information provided under paragraph (d)(2) of this section and § 72.94(a), the Administrator will make a final determination of whether the technology described in the petition is a qualifying repowering technology.

(e) *Contents of repowering extension plan.* A complete repowering extension plan shall include the following elements in a format prescribed by the Administrator:

(1) Identification of the existing unit governed by the plan.

(2) The unit's federally-approved State Implementation Plan sulfur dioxide emissions limitation.

(3) The unit's 1995 actual SO_2 emissions rate.

(4) A schedule for construction, installation, and commencement of operation of the repowering technology approved or submitted for approval under paragraph (d) of this section, with dates for the following milestones:

(i) Completion of design engineering;

(ii) For a plan under paragraph (b)(1) of this section, removal of the existing unit from operation to install the qualified repowering technology;

(iii) Commencement of construction;

(iv) Completion of construction;

(v) Start-up testing;

(vi) For a plan under paragraph (b)(2) of this section, shutdown of the existing unit; and

(vii) Commencement of commercial operation of the repowering technology.

(5) For a plan under paragraph (b)(2) of this section:

(i) Identification of the new unit. A new unit shall not be included in more than one repowering extension plan.

(ii) Certification that the new unit will replace the existing unit.

(iii) Certification that the new unit has the same designated representative as the existing unit.

(iv) Certification that the existing unit will be permanently retired from service on or before the date the new unit commences commercial operation.

(6) The special provisions of paragraph (h) of this section.

(f) *Permitting authority's action on repowering extension plan.* (1) The permitting authority shall not approve a repowering extension plan until the Administrator makes a conditional determination that the technology is a qualified repowering technology, unless the permitting authority conditionally approves such plan subject to the conditional determination of the Administrator.

(2) *Permit issuance.* (i) Upon a conditional determination by the Administrator that the technology to be used in the repowering extension plan is a qualified repowering technology and a determination by the permitting authority that such plan meets the requirements of this section, the permitting authority shall issue the Acid Rain portion of the operating permit including:

(A) The approved repowering extension plan; and

(B) A schedule of compliance with enforceable milestones for construction, installation, and commencement of operation of the repowering technology and other requirements necessary to ensure that Phase II emission reduction requirements under this section will be met.

(ii) Except as otherwise provided in paragraph (g) of this section, the repowering extension shall be in effect starting January 1, 2000 and ending on the day before the date (specified in the Acid Rain permit) on which the existing unit will be removed from operation to install the qualifying repowering technology or will be permanently removed from service for replacement by a new unit with such technology; *provided* that the repowering extension shall end no later than December 31, 2003.

(iii) The portion of the operating permit specifying the repowering extension and other requirements under paragraph (f)(2)(i) of this section shall be subject to the Administrator's final determination, under paragraph (d)(4) of this section, that the technology to be used in the repowering extension plan is a qualifying repowering technology.

(3) *Allowance allocation.* The Administrator will allocate allowances after issuance of an operating permit containing the repowering extension plan (or, if the plan is conditionally approved, after the revision of the Acid Rain permit under § 72.40(c)) and of the Administrator's final determination, under paragraph (d)(4) of this section, that the technology to be used in such plan is a qualifying repowering technology. Allowances will be allocated (including a pro rata allocation for any fraction of a year), as follows:

(i) To the existing unit under the approved plan, in accordance with § 73.21 of this chapter during the repowering extension under paragraph (f)(2)(ii) of this section; and

(ii) To the existing unit under the approved plan under paragraph (b)(1) of this section or, in lieu of any further allocations to the existing unit, to the new unit under the approved plan under paragraph (b)(2) of this section, in accordance with § 73.21 of this chapter, after the repowering extension under paragraph (f)(2)(ii) of this section ends.

(g) *Failed repowering projects.* (1)(i) If, at any time before the end of the repowering extension under paragraph (f)(2)(ii) of this section, the designated representative of a unit governed by an approved repowering extension plan notifies the Administrator in writing that the owners and operators have decided to terminate efforts to properly design, construct, and test the repowering technology specified in the plan before completion of construction or start-up testing and demonstrates, in a proposed permit revision, to the Administrator's satisfaction that such efforts were in good faith, the unit shall not be deemed in violation of the Act because of such a termination. Where the preceding requirements of this paragraph are met, the permitting authority shall revise the operating permit in accordance with this paragraph and paragraph (g)(1)(ii) of this section and § 72.81 (permit modification).

(ii) Regardless of whether notification under paragraph (g)(1)(i) of this

section is given, the repowering extension will end beginning on the earlier of the date of such notification or the date by which the designated representative was required to give such notification under § 72.94(d). The Administrator will deduct allowances (including a pro rata deduction for any fraction of a year) from the Allowance Tracking System account of the existing unit to the extent necessary to ensure that, beginning the day after the extension ends, allowances are allocated in accordance with § 73.21(c)(1) of this chapter.

(2) If the designated representative of a unit governed by an approved repowering extension plan demonstrates to the satisfaction of the Administrator, in a proposed permit revision, that the repowering technology specified in the plan was properly constructed and tested on such unit but was unable to achieve the emissions reduction limitations specified in the plan and that it is economically or technologically infeasible to modify the technology to achieve such limits, the unit shall not be deemed in violation of the Act because of such failure to achieve the emissions reduction limitations. In order to be properly constructed and tested, the repowering technology shall be constructed at least to the extent necessary for direct testing of the multiple combustion emissions (including sulfur dioxide and nitrogen oxides) from such unit while operating the technology at nameplate capacity. Where the preceding requirements of this paragraph are met:

(i) The permitting authority shall revise the Acid Rain portion of the operating permit in accordance with paragraphs (g)(2) (ii) and (iii) and § 72.81 (permit modification).

(ii) The existing unit may be retrofitted or repowered with another clean coal or other available control technology.

(iii) The repowering extension will continue in effect until the earlier of the date the existing unit commences commercial operation with such control technology or December 21, 2003. The Administrator will allocate or deduct allowances as necessary to ensure that allowances are allocated in accordance with paragraph (f)(3) of this section applying the repowering extension under this paragraph.

(h) *Special provisions.* (1) *Emissions Limitations.* (i) *Sulfur Dioxide.* Allowances allocated during the repowering extension under paragraphs (f)(3) and (g)(2)(iii) of this section to a unit governed by an approved repowering extension plan shall not be transferred to any Allowance Tracking System account other than the unit accounts of other units at the same source as that unit.

(ii) *Nitrogen oxides.* Any existing unit governed by an approved repowering extension plan shall be subject to the Acid Rain emissions limitations for nitrogen oxides in accordance with section 407 of the Act and regulations implementing section 407 of the Act beginning on the date that the unit is removed from operation to install the repowering technology or is permanently removed from service.

(iii) No existing unit governed by an approved repowering extension plan shall be eligible for a waiver under section 111(j) of the Act.

(iv) No new unit governed by an approved repowering extension plan shall receive an exemption from the requirements imposed under section 111 of the Act.

(2) *Reporting requirements.* Each unit governed by an approved repowering extension plan shall comply with the special reporting requirements of § 72.94.

(3) *Liability.* (i) The owners and operators of a unit governed by an approved repowering plan shall be liable for any violation of the plan or this section at that or any other unit governed by the plan, including liability for fulfilling the obligations specified in part 77 of this chapter and section 411 of the Act.

(ii) The units governed by the plan under paragraph (b)(2) of this section shall continue to have a common designated representative until the existing unit is permanently retired under the plan.

(4) *Terminations.* Except as provided in paragraph (g) of this section, a repowering extension plan shall not be terminated after December 31, 1999.

[58 FR 3650, Jan. 11, 1993, as amended at 58 FR 15649, Mar. 23, 1993]

Subpart E—Acid Rain Permit Contents

§72.50 General.

(a) Each Acid Rain permit (including any draft or proposed Acid Rain permit) will contain the following elements in a format prescribed by the Administrator:

(1) All elements required for a complete Acid Rain permit application under §72.31 of this part, as approved or adjusted by the permitting authority;

(2) The applicable Acid Rain emissions limitation for sulfur dioxide; and

(3) The applicable Acid Rain emissions limitation for nitrogen oxides.

(b) Each Acid Rain permit is deemed to incorporate the definitions of terms under §72.2 of this part.

§72.51 Permit shield.

Each affected unit operated in accordance with the Acid Rain permit that governs the unit and that was issued in compliance with title IV of the Act, as provided in this part and parts 73, 75, 77, and 78 of this chapter, and the regulations implementing section 407 of the Act, shall be deemed to be operating in compliance with the Acid Rain Program, except as provided in §72.9(g)(6) of this part.

Subpart F—Federal Acid Rain Permit Issuance Procedures

§72.60 General.

(a) *Scope.* This subpart contains the procedures for federal issuance of Acid Rain permits for Phase I of the Acid Rain Program and Phase II for sources in States or geographic areas where the Administrator is the permitting authority as provided under regulations implementing title V of the Act. The procedures in this subpart do not apply to the issuance of Acid Rain permits by State permitting authorities with operating permit programs approved under part 70 of this chapter, except as expressly provided in subpart G of this part.

(b) *Permit Decision Deadlines.* The Administrator will issue or deny an Acid Rain permit under §72.69(a) within 6 months of receipt of a complete Acid Rain permit application submitted for a unit, in accordance with §72.21, at the U.S. EPA Regional Office for the Region in which the source is located.

§72.61 Completeness.

(a) *Determination of Completeness.* The Administrator will determine whether the Acid Rain permit application is complete within 30 days of receipt by the U.S. EPA Regional Office for the Region in which the source is located. The permit application shall be deemed to be complete if the Administrator fails to notify the designated representative to the contrary within 30 days of receipt.

(b) *Supplemental Information.* (1) Regardless of whether the Acid Rain permit application is complete under paragraph (a) of this section, the Administrator may require submission of any additional information that the Administrator determines to be necessary in order to review the Acid Rain permit application and issue an Acid Rain permit.

(2)(i) The designated representative shall submit the information required under paragraph (b)(1) of this section within 30 days after he or she is notified of the requirement for supplemental information unless the Administrator allows for additional time to collect and submit the information.

(ii) If the designated representative fails to submit the supplemental information within the required time period, the Administrator may disapprove that portion of the Acid Rain permit application for the review of which the information was necessary and may deny the source an Acid Rain permit.

§72.62 Draft permit.

(a) After the Administrator receives a complete Acid Rain permit application and any supplemental information, the Administrator will issue a draft permit that incorporates in whole, in part, or with changes or conditions as appropriate, the permit application or deny the source a draft permit.

(b) The draft permit will be based on the information submitted by the designated representative of the affected source and other relevant information.

(c) The Administrator will serve a copy of the draft permit and the statement of basis on the designated representative of the affected source.

(d) The Administrator will provide a 30-day period for public comment, and opportunity to request a public hearing, on the draft permit or denial of a draft permit, in accordance with the public notice required under § 72.65(a)(1)(i) of this part.

§ 72.63 Administrative record.

(a) *Contents of the Administrative Record.* The Administrator will prepare an administrative record for an Acid Rain permit or denial of an Acid Rain permit. The administrative record will contain:

(1) The permit application and any supporting or supplemental data submitted by the designated representative;

(2) The draft permit;

(3) The statement of basis;

(4) Copies of any documents cited in the statement of basis and any other documents relied on by the Administrator in issuing or denying the draft permit (including any records of discussions or conferences with owners, operators, or the designated representative of affected units at the source or interested persons regarding the draft permit), or, for any such documents that are readily available, a statement of their location;

(5) Copies of all written public comments submitted on the draft permit or denial of a draft permit;

(6) The record of any public hearing on the draft permit or denial of a draft permit;

(7) The Acid Rain permit; and

(8) Any response to public comments submitted on the draft permit or denial of a draft permit and copies of any documents cited in the response and any other documents relied on by the Administrator to issue or deny the Acid Rain permit, or, for any such documents that are readily available, a statement of their location.

(b) [Reserved]

§ 72.64 Statement of basis.

(a) The statement of basis will briefly set forth significant factual, legal, and policy considerations on which the Administrator relied in issuing or denying the draft permit.

(b) The statement of basis will include:

(1) The reasons, and supporting authority, for approval or disapproval of any compliance options requested in the permit application, including references to applicable statutory or regulatory provisions and to the administrative record; and

(2) The name, address, and telephone, and facsimile numbers of the EPA office processing the issuance or denial of the draft permit.

§ 72.65 Public notice of opportunities for public comment.

(a)(1) The Administrator will give public notice of the following:

(i) The draft permit or denial of a draft permit and the opportunity for public review and comment and to request a public hearing; and

(ii) Date, time, location, and procedures for any scheduled hearing on the draft permit or denial of a draft permit.

(2) Any public notice given under this section may be for the issuance or denial of one or more draft permits.

(b) *Methods.* The Administrator will give the public notice required by this section by:

(1) Serving written notice on the following persons (except where such person has waived his or her right to receive such notice):

(i) The designated representative;

(ii) The State or local air pollution agency and any State or local utility regulatory authority with jurisdiction over the owners of any source or any unit covered by the Acid Rain permit application;

(iii) The State or local air pollution agency for any contiguous State whose air quality may be affected by, or for any State located within a 50-mile radius of, any source covered by the Acid Rain permit application; and

(iv) Any interested person.

(2) Giving notice by publication in the FEDERAL REGISTER and in a newspaper of general circulation in the area where the source covered by the Acid Rain permit application is located or in a State publication designed to give general public notice.

(c) *Contents.* All public notices issued under this section will contain the following information:

(1) Identification of the EPA office processing the issuance or denial of the draft permit for which the notice is being given.

(2) Identification of the designated representative for the affected source.

(3) Identification of each unit covered by the Acid Rain permit application and the draft permit.

(4) Any compliance options proposed for approval in the draft permit or for disapproval and the total allowances (including any under the compliance options) allocated to each unit if the Acid Rain permit application is approved.

(5) The address and office hours of a public location where the administrative record is available for public inspection and a statement that all information submitted by the designated representative and not protected as confidential under section 114(c) of the Act is available for public inspection as part of the administrative record.

(6) For public notice under paragraph (a)(1)(i) of this section, a brief description of the public comment procedures, including:

(i) A 30-day period for public comment beginning the date of publication of the notice or, in the case of an extension or reopening of the public comment period, such period as the Administrator deems appropriate;

(ii) The address where public comments should be sent;

(iii) Required formats and contents for public comment;

(iv) An opportunity to request a public hearing to occur not earlier than 15 days after public notice is given and the location, date, time, and procedures of any scheduled public hearing; and

(v) Any other means by which the public may participate.

(d) *Extensions and Reopenings of the Public Comment Period.* On the Administrator's own motion or on the request of any person, the Administrator may, at his or her discretion, extend or reopen the public comment period where he or she finds that doing so will contribute to the decision-making process by clarifying one or more significant issues affecting the draft permit or denial of a draft permit. Notice of any such extension or reopening shall be given under paragraph (a)(1)(i) of this section.

§72.66 Public comments.

(a) *General.* During the public comment period, any person may submit written comments on the draft permit or the denial of a draft permit.

(b) *Form.* (1) Comments shall be submitted in duplicate.

(2) The submission shall clearly indicate the draft permit issuance or denial to which the comments apply.

(3) The submission shall clearly indicate the name of the person commenting, his or her interest in the matter, and his or her affiliation, if any, to owners and operators of any unit covered by the Acid Rain permit application.

(c) *Contents.* Timely comments on any aspect of the draft permit or denial or a draft permit will be considered unless they concern:

(1) Any standard requirement under §72.9;

(2) Issues that are not relevant, such as:

(i) The environmental effects of acid rain, acid deposition, sulfur dioxide, or nitrogen oxides generally; and

(ii) Permit issuance procedures, or actions on other permit applications, that are not relevant to the draft permit issuance or denial in question.

(d) Persons who do not wish to raise issues concerning the issuance or denial of the draft permit, but who wish to be notified of any subsequent actions concerning such matter may so indicate in writing during the public comment period or at any other time. The Administrator will place their names on a list of interested persons.

§72.67 Opportunity for public hearing.

(a) During the public comment period, any person may request a public hearing. A request for a public hearing shall be made in writing and shall state the issues proposed to be raised in the hearing.

(b) On the Administrator's own motion or on the request of any person, the Administrator may, at his or her

discretion, hold a pubic hearing whenever the Administrator finds that such a hearing will contribute to the decision-making process by clarifying one or more significant issues affecting the draft permit or denial of a draft permit. Public hearings will not be held on issues under § 72.66(c) (1) and (2).

(c) During a public hearing under this section, any person may submit oral or written comments concerning the draft permit or denial of a draft permit. The Administrator may set reasonable limits on the time allowed for oral statements and will require the submission of a written summary of each oral statement.

(d) The Administrator will assure that a record is made of the hearing.

§ 72.68 Response to comments.

(a) The Administrator will consider comments on the draft permit or denial of a draft permit that are received during the public comment period and any public hearing. The Administrator is not required to consider comments otherwise received.

(b) In issuing or denying an Acid Rain permit, the Administrator will:

(1) Identify any permit provision or portion of the statement of basis that has been changed and the reasons for the change; and

(2) Briefly describe and respond to relevant comments under paragraph (a) of this section.

§ 72.69 Issuance and effective date of acid rain permits.

(a) After the close of the public comment period, the Administrator will issue or deny an Acid Rain permit. The Administrator will serve a copy of any Acid Rain permit and the response to comments on the designated representative for the source covered by the issuance or denial and serve written notice of the issuance or denial on any persons who are entitled to written notice under § 72.65(b)(1) (ii), (iii), and (iv) of this part. The Administrator will also give notice in the FEDERAL REGISTER.

(b)(1) The term of every Acid Rain permit shall be 5 years commencing on its effective date.

(2) Every Acid Rain permit for Phase I shall take effect on January 1, 1995.

Subpart G—Acid Rain Phase II Implementation

§ 72.70 Relationship to title V operating permit program.

(a) *Scope.* This subpart sets forth criteria for approval of State operating permit programs and the requirements with which State permitting authorities with approved programs shall comply, and with which the Administrator will comply in the absence of an approved State program, to issue Phase II Acid Rain permits.

(b) *Relationship to Operating Permit Program.* Each State permitting authority with an affected source shall act in accordance with this part and part 70, and part 78 of this chapter for the purpose of incorporating Acid Rain Program requirements into each affected source's operating permit or for issuing written exemptions under §§ 72.7 and 72.8. To the extent that any requirements of this part and part 78 of this chapter are inconsistent with the requirements of part 70 of this chapter, this part and part 78 of this chapter shall take precedence and shall govern the issuance, denial, revision, reopening, renewal, and appeal of the Acid Rain portion of an operating permit. For purposes of applying this subpart, the provisions of this subpart and of part 70 applicable to Acid Rain permit applications and draft, proposed, and final Acid Rain permits shall also apply to petitions for exemption and draft, proposed, and final written exemptions respectively for new or retired units to the extent consistent with §§ 72.7 and 72.8 of this chapter.

§ 72.71 Approval of state programs—general.

(a) Each State shall submit, to the Administrator for approval, a proposed operating permit program meeting the requirements of this subpart and part 70 of this chapter.

(b) The Administrator will act on State submissions of an operating permit program in accordance with the schedule and procedures set forth in § 70.4(e) of this chapter. The Administrator will approve State programs that conform to the applicable requirements of this subpart and § 70.4(b) of this chapter.

(c)(1) After approval of a State operating permit program, the Administrator will suspend, in accordance with this part and part 70 of this chapter, federal issuance of Acid Rain permits for Phase II for sources and units subject to the State program.

(2) The Administrator will issue all Acid Rain permits for Phase I. However, the Administrator reserves the right to delegate the remaining administration of Acid Rain permits for Phase I to approved State operating permit programs.

§72.72 State permit program approval criteria.

A State operating permit program shall meet the following criteria concerning the Acid Rain Program. Any aspect of the State program or any implementation of the State program that is inconsistent with these criteria shall be grounds for disapproval or withdrawal of approval of the State program by the Administrator:

(a) *Non-Interference with Acid Rain Program.* The State operating permit program shall not include or implement any measures that would interfere with the Acid Rain Program. In particular, the State program shall not restrict or interfere with allowance trading and shall not interfere with the Administrator's decision on an offset plan. Aspects and implementation of the State program that would constitute interference with the Acid Rain Program, and are thus prohibited, include but are not limited to:

(1) Prohibitions, inconsistent with the Acid Rain Program, on the acquisition or transfer of allowances by an affected unit under the jurisdiction of the State permitting authority;

(2) Restrictions, inconsistent with the Acid Rain Program, on an affected unit's ability to sell or otherwise obligate its allowances;

(3) Requirements that an affected unit maintain a balance of allowances in excess of the level determined to be prudent by any utility regulatory authority with jurisdiction over the owners of the affected unit;

(4) Failing to notify the Administrator of any State administrative or judicial appeals of, or decisions covering, Acid Rain permit provisions that might affect Acid Rain Program requirements;

(5) Issuing an order, inconsistent with the Acid Rain Program, interpreting Acid Rain Program requirements as not applicable to an affected source or an affected unit in whole or in part or otherwise adjusting the requirements;

(6) Withholding approval of any compliance option that meets the requirements of the Acid Rain Program; or

(7) Any other aspect of implementation that the Administrator determines would hinder the operation of the Acid Rain Program.

(b) The State operating permit program shall require the following:

(1) *Acid Rain Permit Issuance.* Issuance or denial of Acid Rain permits shall follow the procedures under this part, part 70 of this chapter, and, for combustion or process sources, part 74, including:

(i) *Permit application*—(A) *Requirement to comply. (1)* The owners and operators and the designated representative for each affected source, except for combustion or process sources, under jurisdiction of the State permitting authority shall be required to comply with subparts B, C, and D of this part.

(2) The owners and operators and the designated representative for each combustion or process source under jurisdiction of the State permitting authority shall be required to comply with subpart B of this part and subparts B, C, D, and E of part 74 of this chapter.

(B) *Effect of an Acid Rain permit application.* A complete Acid Rain permit application, except for a permit application for a combustion or process source, shall be binding on the owners and operators and the designated representative of the affected source, all affected units at the source, and any other unit governed by the permit application and shall be enforceable as an Acid Rain permit, from the date of submission of the permit application until the issuance or denial of the Acid Rain permit under paragraph (b)(1)(vii) of this section.

(C) *Submission to the Administrator.* The State permitting authority shall submit a written notice of application completeness to the Administrator

within 10 working days following a determination by the State permitting authority that the Acid Rain permit application is complete.

(ii) *Draft permit.* (A) The State permitting authority shall prepare the draft Acid Rain permit in accordance with subpart E of this part or, for a combustion or process source, subpart B of part 74 of this chapter, or deny a draft Acid Rain permit.

(B) The State permitting authority shall prepare a statement of basis in accordance with the requirements for a statement of basis under § 72.64 of this part.

(C) Prior to issuance of a draft permit for a combustion or process source, the State permitting authority shall provide the designated representative of a combustion or process source an opportunity to confirm its intention to opt-in, in accordance with § 74.14 of this chapter.

(iii) *Notice to Administrator.* The State permitting authority shall submit a copy of the draft Acid Rain permit and the statement of basis to the Administrator and all other relevant portions of the operating permit that may affect the draft Acid Rain permit. This submission requirement will not be waived.

(iv) *Public Notice and Comment Period.* Public notice of the issuance or denial of the draft Acid Rain permit and the opportunity to comment and request a public hearing shall be given by publication in a newspaper of general circulation in the area where the source is located or in a State publication designed to give general public notice. A notice shall be served on those persons required to receive notice under §§ 70.7(h) and 70.8(b) of this chapter.

(v) *Proposed Permit.* Following the public notice and comment period on a draft Acid Rain permit, the permitting authority shall incorporate all changes necessary and issue a proposed Acid Rain permit in accordance with subpart E of this part or, for combustion or process sources, in accordance with subpart B of part 74 of this chapter or deny a proposed Acid Rain permit.

(vi) *Submittal to Administrator.* (A) The State permitting authority shall submit the proposed Acid Rain permit or denial of a proposed Acid Rain permit to the Administrator in accordance with § 70.8(a) of this chapter, the provisions of which shall be treated as applying to the issuance or denial of a proposed Acid Rain permit.

(B) The Administrator will review the proposed Acid Rain permit or denial of a proposed Acid Rain permit in accordance with § 70.8(c) of this chapter, the provisions of which shall be treated as applying to the issuance or denial of a proposed Acid Rain permit.

(vii) *Acid Rain Permit Issuance.* Following the Administrator's review of the proposed Acid Rain permit or denial of a proposed Acid Rain permit, the State permitting authority shall or, under § 70.8(c) of this chapter (treated as applying to the issuance or denial of an Acid Rain permit), the Administrator will, incorporate any required changes and issue or deny the Acid Rain permit in accordance with subpart E of this part.

(viii) *Effective Date of Acid Rain Permit.* Each source's Acid Rain permit issued by a State permitting authority under this section shall be effective for a period of 5 years.

(ix) *New Owners.* An Acid Rain permit shall be binding on any new owner or operator or designated representative of any source or unit governed by the permit.

(x) Each Acid Rain permit (including a draft or proposed permit) shall contain all applicable Acid Rain requirements, shall be a complete and segregable portion of the operating permit, and shall not incorporate information contained in any other documents, other than documents that are readily available.

(xi) Invalidation of the Acid Rain portion of an operating permit shall not affect the continuing validity of the rest of the operating permit, nor shall invalidation of any other portion of the operating permit affect the continuing validity of the Acid Rain portion of the permit.

(xii) No Acid Rain permit (including a draft or proposed permit) shall be issued unless the Administrator has received a certificate of representation for the designated representative of the source in accordance with subpart B of this part.

(xiii) Notwithstanding any State law providing that a permit must be issued by default after a specified time, no Acid Rain permit shall be issued until the Administrator and other States have had an opportunity to review a proposed Acid Rain permit as provided in this section and § 70.8(b) of this chapter.

(xiv) Except as provided in § 72.73(b) and, with regard to combustion or process sources, in § 74.14(c)(6) of this chapter, the State permitting authority shall issue or deny an Acid Rain permit within 18 months of receiving a complete Acid Rain permit application submitted in accordance with § 72.21 or such lesser time approved under part 70 of this chapter.

(2) *Permit Revisions.* In acting on any Acid Rain permit revision, the State permitting authority shall follow the provisions and procedures set forth at subpart H of this part.

(3) *Permit Renewal.* The renewal of an Acid Rain permit for an affected source shall be subject to all the requirements of this subpart pertaining to the issuance of permits.

(4) *Acid Rain Program Forms.* In developing the Acid Rain portion of the operating permit, the permitting authority shall use the applicable forms or other formats prescribed by the Administrator under the Acid Rain Program; *provided* that the Administrator may waive this requirement in whole or in part.

(5) *Acid Rain Appeal Procedures.* (i) Appeals of the Acid Rain portion of an operating permit issued by the State permitting authority that do not challenge or involve decisions or actions of the Administrator under this part, parts 73, 74, 75, 76, 77 and 78 of this chapter, shall be conducted according to procedures established by the State under § 70.4(b)(3)(x) of this chapter. Appeals of the Acid Rain portion of such a permit that challenge or involve such decisions or actions of the Administrator shall follow the procedures under part 78 of this chapter and section 307 of the Act. Such decisions or actions include, but are not limited to, allowance allocations, determinations concerning alternative monitoring systems, and determinations of whether a technology is a qualifying repowering technology.

(ii) Under no circumstances shall a State administrative appeal or judicial appeal of the Acid Rain portion of an operating permit be allowed more than 90 days (or such shorter period as provided by the applicable State appeals procedures) following respectively issuance of the Acid Rain portion that is subject to administrative appeal or issuance of the final agency action subject to judicial appeal.

(iii) The State permitting authority shall serve written notice on the Administrator of any State administrative or judicial appeal concerning as Acid Rain provision of any operating permit or denial of an Acid Rain portion of any operating permit within 30 days of the filing of the appeal.

(iv) Any State administrative permit appeals procedures shall ensure that the Administrator may intervene as a matter of right in any permit appeal involving an Acid Rain permit provision or denial of an Acid Rain permit.

(v) The State permitting authority shall serve written notice on the Administrator of any determination or order in a State administrative or judicial proceeding that interprets, modifies, voids, or otherwise relates to any portion of an Acid Rain permit. Following any such determination or order, the Administrator will have an opportunity to review and veto the Acid Rain permit or revoke the permit for cause in accordance with § 70.8 of this chapter.

(vi) A failure of the State permitting authority to issue an Acid Rain permit in accordance with § 72.73(b)(1)(i) or, with regard to combustion or process sources, § 74.14(c)(6) of this chapter shall be ground for filing an appeal.

(vii) No appeal concerning an Acid Rain requirement shall result in a stay of any provision of the Acid Rain permit for which a stay is barred under part 78 of this chapter.

(6) *Cooperation with Utility Regulatory Authority.* In considering any Acid Rain permit application, the State permitting authority shall ensure coordination with any utility regulatory authority with jurisdiction over the owners of the affected unit.

(7) *New Units and Retired Units Exemptions.* The State permitting authority shall act in accordance with §§ 72.7 and 72.8 on any petition for exemption of a new unit or retired unit from requirements of the Acid Rain Program.

(8) *State Permit Evaluation.* The State permitting authority shall periodically evaluate the extent to which its operating permit program meets the Acid Rain Program requirements and supports a cost-effective implementation of the program. The permit fee rates set by the State permitting authority shall be adequate to cover such evaluation.

[58 FR 3650, Jan. 11, 1993, as amended at 60 FR 17113, Apr. 4, 1995]

§ 72.73 State issuance of Phase II permits.

(a) *State Permit Issuance.* (1) A State with an operating permit program that has been approved by the Administrator under this part and part 70 of this chapter on or before July 1, 1996, shall be responsible for issuing Acid Rain permits for Phase II to all affected sources in that State.

(2) A State that has obtained interim operating permit program approval (as defined in § 70.4(d) of this chapter) on or before July 1, 1996 shall be responsible for issuing Acid Rain permits for Phase II to all affected sources in that State.

(3) A State that has obtained partial operating permit program approval (as defined in § 70.4(c) of this chapter) on or before July 1, 1996 shall be responsible for issuing Acid Rain permits for Phase II to all affected sources in the geographic area to which the partial approval applies.

(4) The State permitting authority shall comply with the procedures for issuance, revision, renewal, and appeal of Acid Rain permits under this subpart.

(b) *Permit Issuance Deadline.* (1)(i) On or before December 31, 1997, a State with an approved operating permit program shall issue an Acid Rain permit for Phase II to each affected source in the geographic area for which the program is approved as set forth in paragraph (a) of this section; *provided* that the designated representative of the source submitted a timely and complete Acid Rain permit application in accordance with § 72.21 of this part and meets the requirements of this subpart and part 70 of this chapter.

(ii) Each Acid Rain permit issued in accordance with this section shall have a term of 5 years commencing on its effective date. Each Acid Rain permit issued in accordance with paragraph (b)(1)(i) of this section shall take effect by the later of January 1, 2000, or, where the permit governs a unit under § 72.6(a)(3) of this part, the deadline for monitor certification under part 75 of this chapter.

(2) *Nitrogen Oxides.* Not later than January 1, 1999, the State permitting authority shall reopen the Acid Rain permit to add the Acid Rain Program nitrogen oxides requirements; *provided* that the designated representative of the affected source submitted a timely and complete Acid Rain permit application for nitrogen oxides in accordance with § 72.21. Such reopening shall not affect the term of the Acid Rain portion of an operating permit.

§ 72.74 Federal issuance of Phase II permits.

(a) The Administrator will be responsible for issuing Acid Rain permits for Phase II for any affected sources in a geographic area (including a State) that does not have an operating permit program with full, partial, or interim approval by the Administrator on or before July 1, 1996, under part 70 of this chapter. After approval of a State program, the Administrator will suspend, in accordance with this part and part 70 of this chapter, federal issuance of such permits for sources in the geographic area covered by the State program and the State shall be responsible for issuing such permits in accordance with § 72.73 of this part.

(b) *Permit Issuance Deadline.* (1)(i) On or before January 1, 1998, the Administrator will issue an Acid Rain permit for Phase II governing Acid Rain Program sulfur dioxide requirements to each affected source in a geographic area that, on July 1, 1996, did not have an approved operating permit program under part 70 of this chapter; *provided* that the designated representative for the source submitted a timely and complete Acid Rain permit application in accordance with § 72.21 of this part.

The failure by the Administrator to issue a permit in accordance with this paragraph shall be grounds for the filing of an appeal under part 78 of this chapter.

(ii) Notwithstanding paragraph (b)(1)(i) of this section, the Administrator may delegate to any State that obtains operating permit program approval after July 1, 1996, responsibility for permit review and implementation.

(iii) Each Acid Rain permit issued in accordance with this section shall have a term of 5 years commencing on its effective date. Each Acid Rain permit issued in accordance with paragraph (b)(1) shall take effect by the later of January 1, 2000 or, where a permit governs a unit under §72.6(a)(3) of this part, the deadline for monitor certification under part 75 of this chapter.

(2) *Nitrogen Oxides.* Not later than 6 months following submission by the designated representative of a timely and complete Acid Rain permit application for nitrogen oxides, the Administrator shall reopen the Acid Rain permit for Phase II to add the Acid Rain Program nitrogen oxides requirements. Such reopening shall not affect the term of the Acid Rain permit.

(c) *Permit Issuance.* The Administrator will issue Acid Rain permits for Phase II in accordance with subparts E and F of this part and the regulations implementing title V of the Act.

[58 FR 3650, Jan. 11, 1993; 58 FR 40747, July 30, 1993]

Subpart H—Permit Revisions

§72.80 General.

(a) This subpart shall govern revisions to any Acid Rain permit issued by the Administrator and to the Acid Rain portion of any operating permit issued by a State with an approved operating permit program under part 70 of this chapter.

(b) The provisions of this subpart shall supersede the operating permit revision procedures specified in part 70 of this chapter with regard to revision of any Acid Rain Program permit provision.

(c) A permit revision may be submitted for approval at any time. No permit revision shall affect the term of the Acid Rain permit to be revised. No permit revision shall excuse any violation of an Acid Rain Program requirement that occurred prior to the effective date of the revision.

(d) The terms of the Acid Rain permit shall apply while the permit revision is pending.

(e) Any determination or interpretation by a State (including a State court) modifying or voiding any Acid Rain permit provision shall be subject to review by the Administrator in accordance with §70.8(c) of this chapter as applied to permit modifications, unless the determination or interpretation is an administrative amendment approved in accordance with §72.83 of this part.

(f) The standard requirements of §72.9 of this part shall not be modified or voided by a permit revision.

(g) Any permit revision involving incorporation of a compliance option that was not submitted for approval and comment during the permit issuance process, or involving a change in a compliance option that was previously submitted, shall meet the requirements for applying for such compliance option under subpart D and section 407 of the Act and regulations implementing section 407 of the Act.

(h) For permit revisions not described in §§72.81 and 72.82 of this part, the permitting authority may, in its discretion, determine which of these sections is applicable.

§72.81 Permit modifications.

(a) Permit revisions that shall follow the permit modification procedures are:

(1) Relaxation of an excess emission offset requirement after approval of the offset plan by the Administrator;

(2) Incorporation of a final nitrogen oxides alternative emission limitation following a demonstration period;

(3) Determinations concerning failed repowering projects under §72.44(g)(1)(i) and (2) of this part.

(b) The following permit revisions shall follow, at the option of the designated representative submitting the permit revision, either the permit modification procedures or the fast-track modification procedures under §72.82 of this part:

(1) Consistent with paragraph (a) of this section, incorporation of a compliance option that the designated representative did not submit for approval and comment during the permit issuance process; except that incorporation of a reduced utilization plan that was not submitted during the permit issuance process, that does not designate a compensating unit, and that meets the requirements of § 72.43 of this part, may use the administrative permit amendment procedures under § 72.83 of this part;

(2) Changes in a substitution plan or reduced utilization plan that result in the addition of a new substitution unit or a new compensating unit under the plan;

(3) Addition of a nitrogen oxides averaging plan to a permit;

(4) Changes in a Phase I extension plan, repowering plan, nitrogen oxides averaging plan, or nitrogen oxides compliance deadline extension; and

(5) Changes in a thermal energy plan that result in any addition or subtraction of a replacement unit or any change affecting the number of allowances transferred for the replacement of thermal energy.

(c)(1) Permit modifications shall follow the permit issuance requirements of:

(i) Subparts E, F, and G of this part, where the Administrator is the permitting authority; or

(ii) Subpart G of this part and § 70.7(e)(4)(ii) of this chapter, where the State is the permitting authority.

(2) For purposes of applying paragraph (c)(1) of this section, a permit modification shall be treated as an Acid Rain permit application, to the extent consistent with this subpart.

[58 FR 3650, Jan. 11, 1993, as amended at 60 FR 17114, Apr. 4, 1995]

§ 72.82 Fast-track modifications.

The following procedures shall apply to all fast-track modifications.

(a) The designated representative shall serve a copy of the fast-track modification on the Administrator, the permitting authority, and any person entitled to a written notice under § 72.65(b)(1) (ii), (iii) and (iv) of this part. Within 5 business days of serving such copies, the designated representative shall also give public notice by publication in a newspaper of general circulation in the area where the source is located or in a State publication designed to give general public notice.

(b) The public shall have a period of 30 days, commencing on the date of publication of the notice, to comment on the fast-track modification. Comments shall be submitted in writing to the permitting authority and to the designated representative.

(c) The designated representative shall submit the fast-track modification to the permitting authority on or before commencement of the public comment period.

(d) Within 30 days of the close of the public comment period, the permitting authority shall consider the fast-track modification and the comments received and approve, in whole or in part or with changes or conditions as appropriate, or disapprove the modification. A fast-track modification shall be effective immediately upon issuance, in accordance with § 70.7(a)(1)(v) of this chapter as applied to significant permit modifications.

§ 72.83 Administrative permit amendment.

(a) Acid Rain permit revisions that shall follow the administrative permit amendment procedures are:

(1) Activation of a compliance option conditionally approved by the permitting authority; *provided* that all requirements for activation under subpart D of this part are met;

(2) Changes in the designated representative or alternative designated representative; *provided* that a new certificate of representation is submitted;

(3) Correction of typographical errors;

(4) Changes in names, addresses, or telephone or facsimile numbers;

(5) Changes in the owners or operators; *provided* that a new certificate of representation is submitted within 30 days;

(6)(i) Termination of a compliance option in the permit; provided that all requirements for termination under subpart D of this part are met and this

procedure shall not be used to terminate a repowering plan after December 31, 1999 or a Phase I extension plan;

(ii) For opt-in sources, termination of a compliance option in the permit; provided that all requirements for termination under §74.47 of this chapter are met.

(7) Changes in a substitution or reduced utilization plan that do not result in the addition of a new substitution unit or a new compensating unit under the plan;

(8) Changes in the date, specified in a unit's Acid Rain permit, of commencement of operation of qualifying Phase I technology, *provided* that they are in accordance with §72.42 of this part;

(9) Changes in the date, specified in a new unit's Acid Rain permit, of commencement of operation or the deadline for monitor certification, *provided* that they are in accordance with §72.9 of this part;

(10) The addition of or change in a nitrogen oxides alternative emissions limitation demonstration period, *provided* that the requirements of regulations implementing section 407 of the Act are met; and

(11) Changes in a thermal energy plan that do not result in the addition or subtraction of a replacement unit or any change affecting the number of allowances transferred for the replacement of thermal energy.

(12) Incorporation of changes that the Administrator has determined to be similar to those in paragraphs (a)(1) through (11) of this section.

(b) Administrative amendments shall follow the procedures set forth at §70.7(d)(3) of this chapter. Where the State is the permitting authority, the permitting authority shall submit the revised portion of the permit to the Administrator within 10 working days after the date of final action on the request for an administrative amendment.

[58 FR 3650, Jan. 11, 1993, as amended at 60 FR 17114, Apr. 4, 1995]

§72.84 Automatic permit amendment.

The following permit revisions shall be deemed to amend automatically, and become a part of the affected unit's Acid Rain permit by operation of law without any further review:

(a) Upon recordation by the Administrator under part 73 of this chapter, all allowance allocations to, transfers to, and deductions from an affected unit's Allowance Tracking System account; and

(b) Incorporation of an offset plan that has been approved by the Administrator under part 77 of this chapter.

§72.85 Permit reopenings.

(a) As provided in §70.7(f) of this chapter, the permitting authority shall reopen an Acid Rain permit for cause, including whenever additional requirements become applicable to any affected unit governed by the permit.

(b) In reopening an Acid Rain permit for cause, the permitting authority shall issue a draft permit changing the provisions, or adding the requirements, for which the reopening was necessary. The draft permit shall be subject to the requirements of subparts E, F, and G of this part.

(c) As provided in §§72.73(b)(2) and 72.74(b)(2) of this part, the permitting authority shall reopen an Acid Rain permit to incorporate nitrogen oxides requirements, consistent with section 407 of the Act and regulations implementing section 407 of the Act.

(d) Any reopening of an Acid Rain permit shall not affect the term of the permit.

Subpart I—Compliance Certification

§72.90 Annual compliance certification report.

(a) *Applicability and deadline.* For each calendar year in which a unit is subject to the Acid Rain emissions limitations, the designated representative of the source at which the unit is located shall submit to the Administrator, within 60 days after the end of the calendar year, an annual compliance certification report for the unit.

(b) *Contents of report.* The designated representative shall include in the annual compliance certification report under paragraph (a) of this section the following elements, in a format prescribed by the Administrator, concerning the unit and the calendar year covered by the report:

(1) Identification of the unit;

(2) For all Phase I units, the information in accordance with §§72.91(a) and 72.92(a) of this part;

(3) If the unit is governed by an approved Phase I extension plan, then the information in accordance with §72.93 of this part;

(4) At the designated representative's option, the total number of allowances to be deducted for the year, using the formula in §72.95 of this part, and the serial numbers of the allowances that are to be deducted;

(5) At the designated representative's option, for units that share a common stack and whose emissions of sulfur dioxide are not monitored separately or apportioned in accordance with part 75 of this chapter, the percentage of the total number of allowances under paragraph (b)(4) of this section for all such units that is to be deducted from each unit's compliance subaccount; and

(6) The compliance certification under paragraph (c) of this section.

(c) *Annual compliance certification.* In the annual compliance certification report under paragraph (a) of this section, the designated representative shall certify, based on reasonable inquiry of those persons with primary responsibility for operating the source and the affected units at the source in compliance with the Acid Rain Program, whether each affected unit for which the compliance certification is submitted was operated during the calendar year covered by the report in compliance with the requirements of the Acid Rain Program applicable to the unit, including:

(1) Whether the unit was operated in compliance with the applicable Acid Rain emissions limitations, including whether the unit held allowances, as of the allowance transfer deadline, in its compliance subaccount (after accounting for any allowance deductions under §73.34(c) of this chapter) not less than the unit's total sulfur dioxide emissions during the calendar year covered by the annual report;

(2) Whether the monitoring plan that governs the unit has been maintained to reflect the actual operation and monitoring of the unit and contains all information necessary to attribute monitored emissions to the unit;

(3) Whether all the emissions from the unit, or a group of units (including the unit) using a common stack, were monitored or accounted for through the missing data procedures and reported in the quarterly monitoring reports;

(4) Whether the facts that form the basis for certification of each monitor at the unit or a group of units (including the unit) using a common stack or for using an Acid Rain Program excepted monitoring method or approved alternative monitoring method, if any, has changed; and

(5) If a change is required to be reported under paragraph (c)(4) of this section, specify the nature of the change, the reason for the change, when the change occurred, and how the unit's compliance status was determined subsequent to the change, including what method was used to determine emissions when a change mandated the need for monitor recertification.

§ 72.91 Phase I unit adjusted utilization.

(a) *Annual compliance certification report.* The designated representative for each Phase I unit shall include in the annual compliance certification report the unit's adjusted utilization for the calendar year in Phase I covered by the report, calculated as follows:

Adjusted utilization=baseline−actual utilization−plan reductions+ compensating generation provided to other units

where:

(1) ''Baseline'' is as defined in §72.2 of this part.

(2) ''Actual utilization'' is the actual annual heat input (in mmBtu) of the unit for the calendar year determined in accordance with part 75 of this chapter.

(3) ''Plan reductions'' are the reductions in actual utilization, for the calendar year, below the baseline that are accounted for by an approved reduced utilization plan. The designated representative for the unit shall calculate the ''plan reductions'' (in mmBtu) using the following formula and converting all values in Kwh to mmBtu using the actual annual average heat rate (Btu/Kwh) of the unit (determined

in accordance with part 75 of this chapter) before the employment of any improved unit efficiency measures under an approved plan:

Plan reductions=reduction from energy conservation+reduction from improved unit efficiency improvements+shifts to designated sulfur-free generators+shifts to designated compensating units

where:

(i) ''Reduction from energy conservation'' is a good faith estimate of the expected kilowatt hour savings during the calendar year from all conservation measures under the reduced utilization plan and the corresponding reduction in heat input (in mmBtu) resulting from those savings. The verified amount of such reduction shall be submitted in accordance with paragraph (b) of this section.

(ii) ''Reduction from improved unit efficiency'' is a good faith estimate of the expected improvement in heat rate during the calendar year and the corresponding reduction in heat input (in mmBtu) at the Phase I unit as a result of all improved unit efficiency measures under the reduced utilization plan. The verified amount of such reduction shall be submitted in accordance with paragraph (b) of this section.

(iii) ''Shifts to designated sulfur-free generators'' is the reduction in utilization (in mmBtu), for the calendar year, that is accounted for by all sulfur-free generators designated under the reduced utilization plan in effect for the calendar year. This term equals the sum, for all such generators, of the ''shift to sulfur-free generator.'' ''Shift to sulfur-free generator'' shall equal the amount, to the extent documented under paragraph (a)(6) of this section, calculated for each generator using the following formula:

Shift to sulfur-free generator=actual sulfur-free utilization−[(average 1985–87 sulfur-free annual utilization) (1+percentage change in dispatch system sales)]

where:

(A) ''Actual sulfur-free utilization'' is the actual annual generation (in Kwh) of the designated sulfur-free generator for the calendar year converted to mmBtus.

(B) ''Average 1985–87 sulfur-free utilization'' is the sum of annual generation (in Kwh) for 1985, 1986, and 1987 for the designated sulfur-free generator, divided by three and converted to mmBtus.

(C) ''Percentage change in dispatch system sales'' is calculated as follows:

$$\text{Percentage change in dispatch system sales} = [S_c - (\sum_{y=1985}^{1987} S_y \div 3)] \div [\sum_{y=1985}^{1987} S_y \div 3]$$

where:

S=dispatch system sales (in Kwh)
c=calendar year
y=1985, 1986, or 1987

If the result of the formula for percentage change in dispatch system sales is less than or equal to zero, then percentage change in dispatch system sales shall be treated as zero only for purposes of paragraph (a)(3)(iii) of this section.

(D) If the result of the formula for ''shift to sulfur-free generator'' is less than or equal to zero, then ''shift to sulfur-free generator'' is zero.

(iv) ''Shifts to designated compensating units'' is the reduction in utilization (in mmBtu) for the calendar year that is accounted for by increased generation at compensating units designated under the reduced utilization plan in effect for the calendar year. This term equals the heat rate, under paragraph (a)(3) of this section, of the unit reducing utilization multiplied by the sum, for all such compensating units, of the ''shift to compensating unit'' for each compensating unit. ''Shift to compensating unit'' shall equal the amount of compensating generation (in Kwh), to the extent documented under paragraph (a)(6) of this section, that the designated representatives of the unit reducing utilization and the compensating unit have certified (in their respective annual compliance certification reports) as the

amount that will be converted to mmBtus and used, in accordance with paragraph (a)(4) of this section, in calculating the adjusted utilization for the compensating unit.

(4) ''Compensating generation provided to other units'' is the total amount of utilization (in mmBtu) necessary to provide the generation (if any) that was shifted to the unit as a designated compensating unit under any other reduced utilization plans that were in effect for the unit and for the calendar year. This term equals the heat rate, under paragraph (a)(3) of this section, of such unit multiplied by the sum of each ''shift to compensating unit'' that is attributed to the unit in the annual compliance certification reports submitted by the Phase I units under such other plans and that is certified under paragraph (a)(3)(iv) of this section.

(5) Notwithstanding paragraphs (a)(3)(i), (ii), and (iii) of this section, where two or more Phase I units include in ''plan reductions'', in their annual compliance certification reports for the calendar year, expected kilowatt hour savings or reduction in heat rate from the same specific conservation or improved unit efficiency measures or increased utilization of the same sulfur-free generator:

(i) The designated representatives of all such units shall submit with their annual reports a certification signed by all such designated representatives. The certification shall apportion the total kilowatt hour savings, reduction in heat rate, or increased utilization among such units.

(ii) Each designated representative shall include in the annual report only the respective unit's share of the total kilowatt hour savings, reduction in heat rate, or increased utilization, in accordance with the certification under paragraph (a)(5)(i) of this section.

(6)(i) Where a unit includes in ''plan reductions'' under paragraph (a)(3) of this section the increase in utilization of any sulfur-free generator, the designated representative of the unit shall submit, with the annual compliance certification report, documentation demonstrating that an amount of electrical energy at least equal to the ''shift to sulfur-free generator'' attributed to the sulfur-free generator in the annual report was actually acquired by the unit's dispatch system from the sulfur-free generator.

(ii) Where a unit includes in ''plan reductions'' under paragraph (a)(3) of this section utilization of any compensating unit, the designated representative of the unit shall submit with the annual compliance certification report, documentation demonstrating that an amount of electrical energy at least equal to the ''shift to compensating unit'' attributed to the compensating unit in the annual report was actually acquired by the unit's dispatch system from the compensating unit.

(7) Notwithstanding paragraphs (a)(3)(i), (ii), (iii), and (iv), (a)(4), and (a)(5) of this section, ''plan reductions'' minus ''compensating generation provided to other units'' shall not exceed ''baseline'' minus ''actual utilization.''

(b) *Confirmation report.* (1) If a unit's annual compliance certification report estimates any expected kilowatt hour savings or improvement in heat rate from energy conservation or improved unit efficiency measures under a reduced utilization plan, the designated representative shall submit, by July 1 of the year in which the annual report was submitted, a confirmation report. The Administrator may grant, for good cause shown, an extension of the time to file the confirmation report. The confirmation report shall include the following elements in a format prescribed by the Administrator:

(i) The verified kilowatt hour savings from each such energy conservation measure and the verified corresponding reduction in the unit's heat input resulting from each measure during the calendar year covered by the annual report. For purposes of this paragraph (b), all values in Kwh shall be converted to mmBtu using the actual annual heat rate (Btu/Kwh) of the unit (determined in accordance with part 75 of this chapter) before the employment of any improved unit measures under an approved reduced utilization plan.

(ii) The verified reduction in the heat rate achieved by each improved unit efficiency measure and the verified corresponding reduction in the unit's heat input resulting from such measure.

(iii) For all figures under paragraphs (b)(1) (i) and (ii) of this section:

(A) Documentation (which may follow the EPA Conservation Verification Protocol) verifying specified figures to the satisfaction of the Administrator; or

(B) Certification, by a State utility regulatory authority that has ratemaking jurisdiction over the utility system that paid for the measures in accordance with § 72.43(b)(2) of this part and over rates reflecting any of the amount paid for such measures and that meets the criteria in § 73.82(c)(1) (i) and (ii) of this chapter, that such authority verified specified figures related to demand-side measures; and

(C) Certification, by a utility regulatory authority that has ratemaking jurisdiction over the utility system that paid for the measures in accordance with § 72.43(b)(2) of this part and over rates reflecting any of the amount paid for such measures, that such authority verified specified figures related to supply-side measures.

(2) Notwithstanding paragraph (b)(1)(i) of this section, where two or more Phase I units include in the confirmation report the verified kilowatt hour savings or reduction in heat rate from the same specific conservation or improved unit efficiency measures:

(i) The designated representatives of all such units shall submit with their confirmation reports a certification signed by all such designated representatives. The certification shall apportion the total kilowatt hour savings or reduction in heat rate among such units.

(ii) Each designated representative shall include in the confirmation report only the respective unit's share of the total savings or reduction in heat rate in accordance with the certification under paragraph (b)(2)(i) of this section.

(3) If the total, included in the confirmation report, of the amounts of verified reduction in the unit's heat input from energy conservation and unit efficiency measures equals the total estimated in the unit's annual compliance certification report from such measures for the calendar year, then the designated representatives shall include in the confirmation report a statement indicating that is true.

(4) If the total, included in the confirmation report, of the amounts of verified reduction in the units's heat input from energy conservation and improved unit efficiency measures is greater than the total estimated in the unit's annual compliance certification report from such measures for the calendar year, then the designated representative shall include in the confirmation report the number of allowances to be credited to the unit's compliance subaccount calculated using the following formula:

Allowances credited&equal;(verified heat input reduction-estimated hear input reduction) × emissions rate • 2000 lbs/ton

where:

(i) ''Verified heat input reduction'' is the total of the amounts of verified reduction in the units' heat input (in mmBtu) from energy conservation and improved unit efficiency measures included in the confirmation report.

(ii) ''Estimated heat input reduction'' is the total of the amounts of reduction in the unit's heat input (in mmBtu) accounted for by energy conservation and improved efficiency measures as estimated in the unit's annual compliance certification report for the calendar year.

(iii) ''Emissions rate'' is the ''emissions rate'' under § 72.92(c)(2)(v) of this part.

(5) If the total, included in the confirmation report, of the amounts of verified reduction in the unit's heat input from energy conservation and improved unit efficiency measures is less than the total estimated in the unit's annual compliance certification report for such measures for the calendar year, then the designated representative shall include in the confirmation report the number of allowances to be deducted from the unit's compliance subaccount, which equals the absolute value of the result of the formula for allowances credited under paragraph (b)(4) of this section.

(6) Unless paragraph (b)(3) of this section applies, the designated representative shall include in the confirmation report the adjusted amount of allowances that would have held in the

unit's compliance subaccount if the deductions made under § 73.35(b) of this chapter had been based on the verified, rather than the estimated, reduction in the unit's heat input from energy conservation and improved efficiency measures, calculated as follows:

Adjusted amount of allowances=allowances held after deduction−excess emissions + allowances credited−allowances deducted

where:

(i) ''*Allowances held after deductions*'' is the amount of allowances held in the unit's compliance subaccount after deductions were made under § 73.35(b) of this chapter based on the annual compliance certification report.

(ii) ''*Excess emission*'' is the amount (if any) of excess emissions determined under § 73.35(b) for the calendar year based on the annual compliance certification report.

(iii) ''*Allowances credited*'' is the amount of allowances calculated under paragraph (b)(4) of this section.

(iv) ''*Allowances deducted*'' is the amount of allowances calculated under paragraph (b)(5) of this section.

(v) If the result of the formula for ''adjusted amount of allowances'' is negative, the absolute value of the result constitutes excess emissions of sulfur dioxide. If the result is positive, there are no excess emissions of sulfur dioxide.

(7) If the amount of excess emissions of sulfur dioxide calculated under paragraph (b)(6) of this section differs from the amount of excess emissions of sulfur dioxide determined under § 73.35(b) of this chapter based on the annual compliance certification report, then the designated representative shall include in the confirmation report a demonstration of: The number of allowances that should be deducted to offset any increase in excess emissions or returned to account for any decrease in excess emissions; and the amount of the excess emissions penalty (excluding interest) that should be paid or returned to account for the change in excess emissions. The Administrator will deduct immediately from the unit's compliance subaccount the amount of allowances that he or she determines is necessary to offset any increase in excess emissions or will return immediately to the unit's compliance subaccount the amount of allowances that he or she determines is necessary to account for any decrease in excess emissions. The designated representative may identify the serial numbers of the allowances to be deducted or returned. In the absence of such identification, the deduction will be on a first-in, first-out basis under § 73.35(c)(2) of this chapter and the return will be at the Administrator's discretion.

(8) If the designated representative of a unit fails to submit on a timely basis a confirmation report (in accordance with paragraph (b) of this section) with regard to the estimate of expected kilowatt hour savings or improvement in heat rate from any energy conservation or improved unit efficiency measure under the reduced utilization plan, then the Administrator will reject such estimate and correct it to equal zero in the unit's annual compliance certification report that includes that estimate. The Administrator will deduct immediately, on a first-in, first-out basis under § 73.35(c)(2) of this chapter, the amount of allowances that he or she determines is necessary to offset any increase in excess emissions of sulfur dioxide that results from the correction and require the owners and operators to pay an excess emission penalty in accordance with part 77 of this chapter.

[58 FR 3650, Jan. 11, 1993, as amended at 58 FR 40747, July 30, 1993; 59 FR 60231, Nov. 22, 1994; 60 FR 18470, Apr. 11, 1995]

§ 72.92 Phase I unit allowance surrender.

(a) *Annual compliance certification report.* If a Phase I unit's adjusted utilization for the calendar year in Phase I under § 72.91(a) is greater than zero, then the designated representative shall include in the annual compliance certification report the number of allowances that shall be surrendered for adjusted utilization using the formula in paragraph (c) of this section and the calculations that were performed to obtain that number.

(b) *Other submissions.*

(1) [Reserved]

(2)(i) If any Phase I unit in a dispatch system is governed during the calendar

year by an approved reduced utilization plan relying on sulfur-free generation, then the designated representatives of all affected units in such dispatch system shall jointly submit, within 60 days of the end of the calendar year, a dispatch system data report that includes the following elements in a format prescribed by the Administrator:

(A) The name of the dispatch system as reported under § 72.33;

(B) The calculation of ''percentage change in dispatch system sales'' under § 72.91(a)(3)(iii)(C);

(C) A certification that each designated representative will use this figure, as appropriate, in its annual compliance certification report and will submit upon request the data supporting the calculation; and

(D) The signatures of all the designated representatives.

(ii) If any Phase I unit in a dispatch system has adjusted utilization greater than zero for the calendar year, then the designated representatives of all Phase I units in such dispatch system shall jointly submit, within 60 days of the end of the calendar year, a dispatch system data report that includes the following elements in a format prescribed by the Administrator:

(A) The name of the dispatch system as reported under § 72.33;

(B) The calculation of ''percentage change in dispatch system sales'' under § 72.91(a)(3)(iii)(C);

(C) The calculation of ''dispatch system adjusted utilization'' under paragraph (c)(2)(i) of this section;

(D) The calculation of ''dispatch system aggregate baseline'' under paragraph (c)(2)(ii) of this section;

(E) The calculation of ''fraction of generation within dispatch system'' under paragraph (c)(2)(v)(A) of this section;

(F) The calculation of ''dispatch system emissions rate'' under paragraph (c)(2)(v)(B) of this section;

(G) The calculation of ''fraction of generation from non-utility generators'' under paragraph (c)(2)(v)(C) of this section;

(H) The calculation of ''non-utility generator average emissions rate '' under paragraph (c)(2)(v)(F) of this section;

(I) A certification that each designated representative will use these figures, as appropriate, in its annual compliance certification report and will submit upon request the data supporting these calculations; and

(J) The signatures of all the designated representatives.

(c) *Allowance surrender formula.* (1) As provided under the allowance surrender formula in paragraph (c)(2) of this section:

(i) Allowances are not surrendered for deduction for the portion of adjusted utilization accounted for by:

(A) Shifts in generation from the unit to other Phase I units;

(B) A dispatch-system-wide sales decline;

(C) Plan reductions under a reduced utilization plan as calculated under § 72.91; and

(D) Foreign generation.

(ii) Allowances are surrendered for deduction for the portion of adjusted utilization that is not accounted for under paragraph (c)(1)(i) of this section.

(2) The designated representative shall surrender for deduction the number of allowances calculated using the following formula:

Allowances surrendered = [dispatch system adjusted utilization + (dispatch system aggregate baseline × percentage change in dispatch system sales)] × unit's share × emissions rate • 2000 lbs/ton.

If the result of the formula for ''allowances surrendered'' is less than or equal to zero, then no allowances are surrendered.

(i) *Calculating dispatch system adjusted utilization.* ''Dispatch system adjusted utilization'' (in mmBtu) is the sum of the adjusted utilization under § 72.91(a) for all Phase I units in the dispatch system. If ''dispatch system adjusted utilization'' is less than or equal to zero, then no allowances are surrendered by any unit in that dispatch system.

(ii) *Calculating dispatch system aggregate baseline.* ''Dispatch system aggregate baseline'' is the sum of the baselines (as defined in § 72.2 of this chapter) for all Phase I units in the dispatch system.

(iii) *Calculating percentage change in dispatch system sales.* ''Percentage

change in dispatch system sales'' is the ''percentage change in dispatch system sales'' under § 72.91 (a)(3)(iii)(C); *provided* that if result of the formula in § 72.91(a)(3)(iii)(C) is greater than or equal to zero, the value shall be treated as zero only for purposes of paragraph (c)(2) of this section.

(iv) *Calculating unit's share.* ''Unit's share'' is the unit's adjusted utilization divided by the sum of the adjusted utilization for all Phase I units within the dispatch system that have adjusted utilization of greater than zero and is calculated as follows:

$$\textit{Unit's share} = \frac{U_{unit}}{\sum_{i=1}^{m} U_i}$$

where:

(A) U_{unit} = the unit's adjusted utilization for the calendar year;

(B) U_i = the adjusted utilization of a Phase I unit in the dispatch system for the calendar year; and

(C) m = all Phase I units in the dispatch system having an adjusted utilization greater than 0 for the calendar year.

(v) *Calculating emissions rate.* ''Emissions rate'' (in lbs/mmBtu) is the weighted average emissions rate for sulfur dioxide of all units and generators, within and outside the dispatch system, that contributed to the dispatch system's electrical output for the year, calculated as follows:

Emissions rate = [fraction of generation within dispatch system × dispatch system emissions rate] + [fraction of generation from non-utility generators × non-utility generator average emissions rate] + [fraction of generation outside dispatch system × fraction of non-Phase 1 and non-foreign generation in NERC region × NERC region emissions rate]

Where:

(A) ''Fraction of generation within dispatch system'' is the fraction of the dispatch system's total sales accounted for by generation from units and generators within the dispatch system, other than generation from non-utility generators. This term equals the total generation (in Kwh) by all units and generators within the dispatch system for the calendar year minus the total non-utility generation from non-utility generators within the dispatch system for the calendar year and divided by the total sales (in Kwh) by the dispatch system for the calendar year.

(B) Dispatch system emissions rate'' is the weighted average rate (in lbs/mmBtu) for the dispatch system calculated as follows:

Dispatch system emissions rate =

$$\sum_{i=1}^{k} g_i \, r_i \div \sum_{i=1}^{k} g_i$$

Where:

g_i = the difference between a Phase II unit's actual utilization for the calendar year and that Phase II unit's baseline. If that difference is less than or equal to zero, then the difference shall be treated as zero only for purposes of paragraph (c)(2)(v) of this section and that unit will be excluded from the calculation of dispatch system emissions rate. Notwithstanding the prior sentence, if the actual utilization of each Phase II unit for the year is equal to or less than the baseline, then g_i shall equal a Phase II unit's actual utilization for the year. Notwithstanding any provision in this paragraph (c)(2)(v)(B) to the contrary, if the actual utilization of each Phase II unit in the dispatch system is zero or there are no Phase II units in the dispatch system, then the dispatch system emissions rate shall equal the fraction of non-Phase I and non-foreign generation in the NERC region multiplied by the NERC region emissions rate.

r_i = a Phase II unit's emissions rate (in lbs/mmBtu), determined in accordance with part 75 of this chapter, for the calendar year.

k = number of Phase II units in the dispatch system.

(C) ''Fraction of generation from non-utility generators'' is the fraction of the dispatch system's total sales accounted for by generation acquired from non-utility generators within or outside the dispatch system. This term equals the total non-utility generation from non-utility generators (within or outside the dispatch system) for the calendar year divided by the total sales (in Kwh) by the dispatch system for the calendar year.

(D) ''Non-utility generator'' is a power production facility (within or outside the dispatch system) that is not an affected unit or a sulfur-free generator and that has a ''non-utility generator emissions rate'' for the calendar year under paragraph (c)(2)(v)(F) of this section.

(E) ''Non-utility generation'' is the generation (in Kwh) that the dispatch system acquired from a non-utility generator during the calendar year as required by federal or State law or an order of a utility regulatory authority or under a contract awarded as the result of a power purchase solicitation required by federal or State law or an order of a utility regulatory authority.

(F) ''Non-utility generator average emissions rate'' is the weighted average rate (in lbs/mmBtu) for the non-utility generators calculated as follows:

Non-utility generator average emissions rate =

$$\sum_{i=1}^{n} N_i R_i \div \sum_{i=1}^{n} N_i$$

Where:

N_i = non-utility generation from a non-utility generator;

R_i = non-utility generator emissions rate for the calendar year for a non-utility generator, which shall equal the most stringent federally enforceable or State enforceable SO_2 emissions limitation applicable for the calendar year to such power production facility, as determined in accordance with paragraphs (c)(2)(v)(F) (*1*), (*2*), and (*3*) of this section; and

n = number of non-utility generators from which the dispatch system acquired non-utility generation. If n equals zero, then the non-utility generator average emissions rate shall be treated as zero only for purposes of paragraph (c)(2)(v) of this section.

(*1*) For purposes of determining the most stringent emissions limitation, applicable emissions limitations shall be converted to lbs/mmBtu in accordance with appendix B of this part. If an applicable emissions limitation cannot be converted to a unit-specific limitation in lbs/mmBtu under appendix B of this part, then the limitation shall not be used in determining the most stringent emissions limitation. Where the power production facility is subject to different emissions limitations depending on the type of fuel it uses during the calendar year, the most stringent emissions limitation shall be determined separately with regard to each type of fuel and the resulting limitation with the highest amount of lbs/mmBtu shall be treated as the facility's most stringent federally enforceable or State enforceable emissions limitation.

(*2*) If there is no applicable emissions limitation that can be used in determining the most stringent emissions limitation under paragraph (c)(2)(v)(F)(*1*) of this section, then the power production facility has no non-utility generator emissions rate for

purposes of paragraphs (c)(2)(v) (D) and (F) of this section and the generation from the facility shall be treated, for purposes of this paragraph (c)(2)(v) as generation from units and generators within the dispatch system if the facility is within the dispatch system or as generation from units and generators outside the dispatch system if the facility is outside the dispatch system.

(*3*) Notwithstanding paragraphs (c)(2)(v)(F) (*1*) and (*2*) of this section, if the power production facility is authorized under federal or State law to use only natural gas as fuel, then the most stringent emissions limitation for the facility for the calendar year shall be deemed to be 0.0006 lbs/mmBtu.

(G) ''Fraction of generation outside dispatch system'' = 1−fraction of generation within dispatch system−fraction of generation from non-utility generators.

(H) ''Fraction of non-Phase I and non-foreign generation in NERC region'' is the portion of the NERC region's total sales generated by units and generators other than Phase I units or foreign sources in the unit's NERC region in 1985, as set forth in Table 1 of this section.

(I) ''NERC region emissions rate'' is the weighted average emission rate (in lbs/mmBtu) for the unit's NERC region in 1985, as set forth in Table 1 of this section.

TABLE 1—NERC REGION GENERATION AND EMISSIONS RATE IN 1985

NERC region	Fraction of non-phase I and non-foreign generation in NERC region	NERC weighted average emissions rate (lbs/mmBtu)
WSCC	0.847	0.466
SPP	0.948	0.647
SERC	0.749	1.315
NPCC	0.423	1.058
MAPP	0.725	1.171
MAIN	0.682	1.495
MAAC	0.750	1.599
ERCOT	1.000	0.491
ECAR	0.549	1.564

[58 FR 3650, Jan. 11, 1993, as amended at 58 FR 40747, July 30, 1993; 60 FR 18470, Apr. 11, 1995]

§ 72.93 Units with Phase I extension plans.

Annual compliance certification report. The designated representative for a control unit governed by a Phase I extension plan shall include in the unit's annual compliance certification report for calendar year 1997, the start-up test results upon which the vendor is released from liability under the vendor certification of guaranteed sulfur dioxide removal efficiency under § 72.42(c)(12).

§ 72.94 Units with repowering extension plans.

(a) *Design and engineering and contract requirements.* No later than January 1, 2000, the designated representative of a unit governed by an approved repowering plan shall submit to the Administrator and the permitting authority:

(1) Satisfactory documentation of a preliminary design and engineering effort.

(2) A binding letter agreement for the executed and binding contract (or for each in a series of executed and binding contracts) for the majority of the equipment to repower the unit using the technology conditionally approved by the Administrator under § 72.44(d)(3).

(3) The letter agreement under paragraph (a)(2) of this section shall be signed and dated by each party and specify:

(i) The parties to the contract;

(ii) The date each party executed the contract;

(iii) The unit to which the contract applies;

(iv) A brief list identifying each provision of the contract;

(v) Any dates to which the parties agree, including construction completion date;

(vi) The total dollar amount of the contract; and

(vii) A statement that a copy of the contract is on site at the source and will be submitted upon written request of the Administrator or the permitting authority.

(b) *Removal from operation to repower.* The designated representative of a unit governed by an approved repowering plan shall notify the Administrator in writing at least 60 days in advance of

the date on which the existing unit is to be removed from operation so that the qualified repowering technology can be installed, or is to be replaced by another unit with the qualified repowering technology, in accordance with the plan.

(c) *Commencement of operation.* Not later than 60 days after the unit repowered under an approved repowering plan commences operation at full load, the designated representative of the unit shall submit a report comparing the actual hourly emissions and percent removal of each pollutant controlled at the unit to the actual hourly emissions and percent removal at the existing unit under the plan prior to repowering, determined in accordance with part 75 of this chapter.

(d) *Decision to terminate.* If at any time before the end of the repowering extension the owners and operators decide to terminate good faith efforts to design, construct, and test the qualified repowering technology on the unit to be repowered under an approved repowering plan, then the designated representative shall submit a notice to the Administrator by the earlier of the end of the repowering extension or a date within 30 days of such decision, stating the date on which the decision was made.

§72.95 Allowance deduction formula.

The following formula shall be used to determine the total number of allowances to be deducted for the calendar year from the allowances held in an affected unit's compliance subaccount as of the allowance transfer deadline applicable to that year:

Total allowances deducted=Tons emitted + Allowances surrendered for underutilization+Allowances deducted for Phase I extensions

where:

(a) ''Tons emitted'' is the total tons of sulfur dioxide emitted by the unit during the calendar year, as reported in accordance with part 75 of this chapter.

(b) ''Allowances surrendered for underutilization'' is the total number of allowances calculated in accordance with §72.92 (a) and (c).

(c) ''Allowances deducted for Phase I extensions'' is the total number of allowances calculated in accordance with §72.42(f)(1)(i).

§72.96 Administrator's action on compliance certifications.

(a) The Administrator may review, and conduct independent audits concerning, any compliance certification and any other submission under the Acid Rain Program and make appropriate adjustments of the information in the compliance certifications and other submissions.

(b) The Administrator may deduct allowances from or return allowances to a unit's Allowance Tracking System account in accordance with part 73 of this chapter based on the information in the compliance certifications and other submissions, as adjusted.

APPENDIX A TO PART 72—METHODOLOGY FOR ANNUALIZATION OF EMISSIONS LIMITS

For the purposes of the Acid Rain Program, 1985 emissions limits must be expressed in pounds of SO_2 per million British Thermal Unit of heat input (lb/mmBtu) and expressed on an annual basis.

Annualization factors are used to develop annual equivalent SO_2 limits as required by section 402(18) of the CAA. Many emission limits are enforced on a shorter term basis (or averaging period) than annually. Because of the variability of sulfur in coal and, in some cases, scrubber performance, meeting a particular limit with an averaging period of less than a year and at a specified statutory emissions level would require a lower annual average SO_2 emission rate (or annual equivalent SO_2 limit) than would the shorter term statutory limit. EPA has selected a compliance level of one exceedance per 10 years. For example, an SO_2 emission limit of 1.2 lbs/MMBtu, enforced for a scrubbed unit over a 7-day averaging period, would result in an annualized SO_2 emission limit of 1.16 lbs/MMBtu. In general, the shorter the averaging period, the lower the annual equivalent would be. Thus, the annualization of limits is established by multiplying each federally enforceable limit by an annualization factor that is determined by the averaging period and whether or not it's a scrubbed unit.

TABLE A–1.—SO_2 EMISSION AVERAGING PERIODS AND ANNUALIZATION FACTORS

Definition	Annualization factor	
	Scrubbed Unscrubbed	
	Unit	Unit
Oil/gas unit	1.00	1.00
<=1 day	0.93	0.89
1 week	0.97	0.92
30 days	1.00	0.96
90 days	1.00	1.00
1 year	1.00	1.00
Not specified	0.93	0.89
At all times	0.93	0.89
Coal unit: No Federal limit or limit unknown	1.00	1.00

APPENDIX B TO PART 72—METHODOLOGY FOR CONVERSION OF EMISSIONS LIMITS

For the purposes of the Acid Rain Program, all emissions limits must be expressed in pounds of SO_2 per million British Thermal Unit of heat input (lb/mmBtu).

The factor for converting pounds of sulfur to pounds of SO_2 is based on the molecular weights of sulfur (32) and SO_2 (64). Limits expressed as percentage of sulfur or parts per million (ppm) depend on the energy content of the fuel and thus may vary, depending on several factors such as fuel heat content and atmospheric conditions. Generic conversions for these limits are based on the assumed average energy contents listed in Table A–2. In addition, limits in ppm vary with boiler operation (e.g., load and excess air); generic conversions for these limits assume, conservatively, very low excess air. The remaining factors are based on site-specific heat rates and capacities to develop conversions for Btu per hour. Standard conversion factors for residual oil are 42 gal/bbl and 7.88 lbs/gal.

TABLE B–1.—CONVERSION FACTORS

[Emission limits converted to lbs SO_2/MMBtu by multiplying as below]

Unit measurement	Plant fuel type			
	Bituminous coal	Subbituminous coal	Lignite coal	Oil
Lbs sulfur/ MMBtu	2.0	2.0	2.0	2.0
% sulfur in fuel	1.66	2.22	2.86	1.07
Ppm SO_2	0.00287	0.00384	.....	0.00167
Ppm sulfur in fuel	.....	.....	.....	0.00334
Tons SO_2/hour				
.				
Lbs SO_2/hour				

[1] In these cases, if the limit was specified as the ''site'' limit, the summer net dependable capability for the entire plant is used; otherwise, the summer net dependable capability for the unit is used. For units listed in the NADB, ''HEATRATE'' shall be that listed in the NADB under that field and ''SUMNDCAP'' shall be that listed in the NADB under that field. For units not listed in the NADB, ''HEATRATE'' is the generator net full load heat rate reported on Form EIA–860 and ''SUMNDCAP'' is the summer net dependable capability of the generator (in MWe) as reported on Form EIA–860.

TABLE B–2.—ASSUMED AVERAGE ENERGY CONTENTS

Fuel type	Average heat content
Bituminous Coal	24 MMBtu/ton.
Subbituminous Coal	18 MMBtu/ton.
Lignite Coal	14 MMBtu/ton.
Residual Oil	6.2 MMBtu/bbl.

APPENDIX C TO PART 72—ACTUAL 1985 YEARLY SO_2 EMISSIONS CALCULATION

The equation used to calculate the yearly SO_2 emissions (SO2) is as follows:

SO2 = (coal SO_2 emissions) + (oil SO_2 emissions) (in tons)

If gas is the only fuel, gas emissions are defaulted to 0.

Each fuel type SO_2 emissions is calculated on a yearly basis, using the equation:

fuel SO_2 emissions (in tons) = (yrly wtd. av. fuel sulfur %) × (AP–42 fact.) × (1−scrb. effic. %/100) × (units conver. fact.) × (yearly fuel burned)

For coal, the yearly fuel burned is in tons/yr and the AP–42 factor (which accounts for the ash retention of sulfur in coal), in lbs SO_2 ton coal, is by coal type:

Coal type	AP–42 factor
Bituminous, anthracite	39 lbs/ton
Subbituminous	35
Lignite	30

For oil, the yearly fuel burned is in gal/yr. If it is in bbl/yr, convert using 42 gal/bbl oil. The AP–42 factor (which accounts for the oil density), in lbs SO_2/thousand gal oil, is by oil type:

Oil type	AP–42 factor
Distillate (light)	142 lbs/1,000 gal
Residual (heavy)	157

For all fuel, the units conversion factor is 1 ton/2000 lbs.

APPENDIX D TO PART 72—CALCULATION OF POTENTIAL ELECTRIC OUTPUT CAPACITY

The potential electrical output capacity is calculated from the maximum design heat input from the boiler by the following equation:

$$\frac{\text{max. design heat input}}{3} \times \frac{\times 1\ \text{kw-hr}}{3413\ \text{Btu}} \times \frac{\times 1\ \text{MWe}}{1000\ \text{Kw}}$$

For example:

(1) Assume a boiler with a maximum design heat input capacity of 340 million Btu/hr.

(2) One-third of the maximum design heat input capacity is 113.3 mmBtu/hr. The one-third factor relates to the thermodynamic efficiency of the boiler.

(3) To express this in MWe, the standards conversion of 3413 Btu to 1 kw-hr is used: 113.3×10^6 Btu/hr×1 kw-hr / 3413 Btu×1 MWe / 1000 kw=33.2 MWe

[58 FR 15649, Mar. 23, 1993]

PART 73—SULFUR DIOXIDE ALLOWANCE SYSTEM

Subpart A—Background and Summary

Sec.
73.1 Purpose and scope.
73.2 Applicability.
73.3 General.

Subpart B—Allowance Allocations

73.10 Initial allocations for phase I and II.
73.11 Revision of allocations.
73.12 Rounding procedures.
73.13 Procedures for submittals.
73.14—73.15 [Reserved]
73.16 Phase I early reduction credits.
73.17 [Reserved]
73.18 Submittal procedures for units commencing commercial operation during the period from January 1, 1993, through December 31, 1995.
73.19 Certain units with declining SO_2 rates.
73.20 Phase II early reduction credits.
73.21 Phase II repowering allowances.
73.22—73.24 [Reserved]
73.25 Phase I extension reserve.
73.26 Conservation and renewable energy reserve.
73.27 Special allowance reserve.

Subpart C—Allowance Tracking System

73.30 Allowance tracking system accounts.
73.31 Establishment of accounts.
73.32 Allowance account contents.
73.33 Authorized account representative.
73.34 Recordation in accounts.
73.35 Compliance.
73.36 Banking.
73.37 Account error and dispute resolution.

73.38 Closing of accounts.

Subpart D—Allowance Transfers

73.50 Scope and submission of transfers.
73.51 Prohibition.
73.52 EPA recordation.
73.53 Notification.

Subpart E—Auctions, Direct Sales, and Independent Power Producers Written Guarantee

73.70 Auctions.
73.71 Bidding.
73.72 Direct sales.
73.73 Delegation of auctions and sales and termination of auctions and sales.

Subpart F—Energy Conservation and Renewable Energy Reserve

73.80 Operation of allowance reserve program for conservation and renewable energy.
73.81 Qualified conservation measures and renewable energy generation.
73.82 Application for allowances from reserve program.
73.83 Secretary of Energy's action on net income neutrality applications.
73.84 Administrator's action on applications.
73.85 Administrator review of the reserve program.
73.86 State regulatory autonomy.

APPENDIX A TO SUBPART F—LIST OF QUALIFIED ENERGY CONSERVATION MEASURES, QUALIFIED RENEWABLE GENERATION, AND MEASURES APPLICABLE FOR REDUCED UTILIZATION

Subpart G—Small Diesel Refineries

73.90 Allowance allocations for small diesel refineries.

AUTHORITY: 42 U.S.C. 7601 and 7651 *et seq.*

Subpart A—Background and Summary

SOURCE: 58 FR 3687, Jan. 11, 1993, unless otherwise noted.

§ 73.1 Purpose and scope.

The purpose of this Part is to establish the requirements and procedures for the following:

(a) The allocation of sulfur dioxide emissions allowances;

(b) The tracking, holding, and transfer of allowances;

(c) The deduction of allowances for purposes of compliance and for purposes of offsetting excess emissions pursuant to parts 72 and 77 of this chapter;

(d) The sale of allowances through EPA-sponsored auctions and a direct sale, including the independent power producers written guarantee program; and

(e) The application for, and distribution of, allowances from the Conservation and Renewable Energy Reserve.

(f) The application for, and distribution of, allowances for desulfurization of fuel by small diesel refineries.

[58 FR 3687, Jan. 11, 1993, as amended at 58 FR 15650, Mar. 23, 1993]

§ 73.2 Applicability.

The following parties shall be subject to the provisions of this Part:

(a) Owners, operators, and designated representatives of affected sources and affected units pursuant to § 72.6 of this chapter;

(b) Any new independent power producer as defined in section 416 of the Act and § 72.2 of this chapter, except as provided in section 405(g)(6) of the Act;

(c) Any owner of an affected unit who may apply to receive allowances under the Energy Conservation and Renewable Energy Reserve Program established in accordance with section 404(f) of the Act;

(d) Any small diesel refinery as defined in § 72.2 of this chapter, and

(e) Any other person, as defined in § 72.2 of this chapter, who chooses to purchase, hold, or transfer allowances as provided in section 403(b) of the Act.

§ 73.3 General.

Part 72 of this chapter, including §§ 72.2 (definitions), 72.3 (measurements, abbreviations, and acronyms), 72.4 (Federal authority), 72.5 (State authority), 72.6 (applicability), 72.7 (new units exemption), 72.8 (retired unit exemption), 72.9 (standard requirements), 72.10 (availability of information), and 72.11 (computation of time) of part 72, subpart A of this chapter, shall apply to this part. The procedures for appeals of decisions of the Administrator under this part are contained in part 78 of this chapter. Sections 73.3 (Definitions) and 73.4 (Deadlines), which were previously published with subpart E of this part—''Auctions, Direct Sales, and

Independent Power Producers Written Guarantee'', are codified at §§72.2 and 72.12 of this chapter, respectively.

Subpart B—Allowance Allocations

SOURCE: 58 FR 3687, Jan. 11, 1993, unless otherwise noted.

§73.10 Initial allocations for phase I and II.

(a) *Phase I allowances.* The Administrator will allocate allowances to the unit account for each unit listed in Table 1 of this section in the amount listed in Column A to be held in each future year subaccount for the years 1995 through 1999.

TABLE 1.—PHASE I ALLOWANCE ALLOCATIONS

State name	Plant name	Boiler	Column A final phase 1 allocation	Column B auction and sales reserve
Alabama	Colbert	1	13213	357
		2	14907	403
		3	14995	405
		4	15005	405
		5	36202	978
	E.C. Gaston	1	17624	476
		2	18052	488
		3	17828	482
		4	18773	507
		5	58265	1575
Florida	Big Bend	BB01	27662	748
		BB02	26387	713
		BB03	26036	704
	Crist	6	18695	505
		7	30846	834
Georgia	Bowen	1BLR	54838	1482
		2BLR	53329	1441
		3BLR	69862	1888
		4BLR	69852	1888
	Hammond	1	8549	231
		2	8977	243
		3	8676	234
		4	36650	990
	Jack McDonough	MB1	19386	524
		MB2	20058	542
	Wansley	1	68908	1862
		2	63708	1722
	Yates	Y1BR	7020	190
		Y2BR	6855	185
		Y3BR	6767	183
		Y4BR	8676	234
		Y5BR	9162	248
		Y6BR	24108	652
		Y7BR	20915	565
Illinois	Baldwin	1	46052	1245
		2	48695	1316
		3	46644	1261
	Coffeen	01	12925	349
		02	39102	1057
	Grand Tower	09	6479	175
	Hennepin	2	20182	545
	Joppa Steam	1	12259	331
		2	10487	283
		3	11947	323
		4	11061	299
		5	11119	301
		6	10341	279
	Kincaid	1	34564	934
		2	37063	1002
	Meredosia	05	15227	411
	Vermilion	2	9735	263
Indiana	Bailly	7	12256	331
		8	17134	463
	Breed	1	20280	548
	Cayuga	1	36581	989
		2	37415	1011
	Clifty Creek	1	19620	530

TABLE 1.—PHASE I ALLOWANCE ALLOCATIONS—Continued

State name	Plant name	Boiler	Column A final phase 1 allocation	Column B auction and sales reserve
		2	19289	521
		3	19873	537
		4	19552	528
		5	18851	509
		6	19844	536
	Elmer W. Stout	50	4253	115
		60	5229	141
		70	25883	699
	F.B. Culley	2	4703	127
		3	18603	503
	Frank E. Ratts	1SG1	9131	247
		2SG1	9296	251
	Gibson	1	44288	1197
		2	44956	1215
		3	45033	1217
		4	44200	1195
	H.T. Pritchard	6	6325	171
	Michigan City	12	25553	691
	Petersburg	1	18011	487
		2	35496	959
	R. Gallagher	1	7115	192
		2	7980	216
		3	7159	193
		4	8386	227
	Tanners Creek	U4	27209	735
	Wabash River	1	4385	118
		2	3135	85
		3	4111	111
		5	4023	109
		6	13462	364
	Warrick	4	29577	799
Iowa	Burlington	1	10428	282
	Des Moines	11	2259	61
	George Neal	1	2571	69
	Milton L. Kapp	2	13437	363
	Prairie Creek	4	7965	215
	Riverside	9	3885	105
Kansas	Quindaro	2	4109	111
Kentucky	Coleman	C1	10954	296
		C2	12502	338
		C3	12015	325
	Cooper	1	7254	196
		2	14917	403
	E.W. Brown	1	6923	187
		2	10623	287
		3	25413	687
	Elmer Smith	1	6348	172
		2	14031	379
	Ghent	1	27662	748
	Green River	5	7614	206
	H.L. Spurlock	1	22181	599
	HMP&L Station 2	H1	12989	351
		H2	11986	324
	Paradise	3	57613	1557
	Shawnee	10	9902	268
Maryland	C.P. Crane	1	10058	272
		2	8987	243
	Chalk Point	1	21333	577
		2	23690	640
	Morgantown	1	34332	928
		2	37467	1013
Michigan	J.H. Campbell	1	18773	507
		2	22453	607
Minnesota	High Bridge	6	4158	112
Mississippi	Jack Watson	4	17439	471
		5	35734	966
Missouri	Asbury	1	15764	426
	James River	5	4722	128
	LaBadie	1	39055	1055
		2	36718	992

TABLE 1.—PHASE I ALLOWANCE ALLOCATIONS—Continued

State name	Plant name	Boiler	Column A final phase 1 allocation	Column B auction and sales reserve
		3	39249	1061
		4	34994	946
	Montrose	1	7196	194
		2	7984	216
		3	9824	266
	New Madrid	1	27497	743
		2	31625	855
	Sibley	3	15170	410
	Sioux	1	21976	594
		2	23067	623
	Thomas Hill	MB1	9980	270
		MB2	18880	510
New Hampshire	Merrimack	1	9922	268
		2	21421	579
New Jersey	B.L. England	1	8822	238
		2	11412	308
New York	Dunkirk	3	12268	332
		4	13690	370
	Greenidge	6	7342	198
	Milliken	1	10876	294
		2	12083	327
	Northport	1	19289	521
		2	23476	634
		3	25783	697
	Port Jefferson	3	10194	276
		4	12006	324
Ohio	Ashtabula	7	18351	496
	Avon Lake	11	12771	345
		12	33413	903
	Cardinal	1	37568	1015
		2	42008	1135
	Conesville	1	4615	125
		2	5360	145
		3	6029	163
		4	53463	1445
	Eastlake	1	8551	231
		2	9471	256
		3	10984	297
		4	15906	430
		5	37349	1009
	Edgewater	13	5536	150
	Gen. J.M. Gavin	1	86690	2343
		2	88312	2387
	Kyger Creek	1	18773	507
		2	18072	488
		3	17439	471
		4	18218	492
		5	18247	493
	Miami Fort	5–1	417	11
		5–2	417	11
		6	12475	337
		7	42216	1141
	Muskingum River	1	16312	441
		2	15533	420
		3	15293	413
		4	12914	349
		5	44364	1199
	Niles	1	7608	206
		2	9975	270
	Picway	9	5404	146
	R.E. Burger	5	3371	91
		6	3371	91
		7	11818	319
		8	13626	368
	W.H. Sammis	5	26496	716
		6	43773	1183
		7	47380	1280
	Walter C. Beckjord	5	9811	265
		6	25235	682
Pennsylvania	Armstrong	1	14031	379

TABLE 1.—PHASE I ALLOWANCE ALLOCATIONS—Continued

State name	Plant name	Boiler	Column A final phase 1 allocation	Column B auction and sales reserve
		2	15024	406
	Brunner Island	1	27030	730
		2	30282	818
		3	52404	1416
	Cheswick	1	38139	1031
	Conemaugh	1	58217	1573
		2	64701	1749
	Hatfield's Ferry	1	36835	995
		2	36338	982
		3	39210	1060
	Martins Creek	1	12327	333
		2	12483	337
	Portland	1	5784	156
		2	9961	269
	Shawville	1	10048	272
		2	10048	272
		3	13846	374
		4	13700	370
	Sunbury	3	8530	230
		4	11149	301
Tennessee	Allen	1	14917	403
		2	16329	441
		3	15258	412
	Cumberland	1	84419	2281
		2	92344	2496
	Gallatin	1	17400	470
		2	16855	455
		3	19493	527
		4	20701	559
	Johnsonville	1	7585	205
		10	7351	199
		2	7828	212
		3	8189	221
		4	7780	210
		5	8023	217
		6	7682	208
		7	8744	236
		8	8471	229
		9	6894	186
West Virginia	Albright	3	11684	316
	Fort Martin	1	40496	1094
		2	40116	1084
	Harrison	1	47341	1279
		2	44936	1214
		3	40408	1092
	Kammer	1	18247	493
		2	18948	512
		3	16932	458
	Mitchell	1	42823	1157
		2	44312	1198
	M.T. Storm	1	42570	1150
		2	34644	936
		3	41314	1116
Wisconsin	Edgewater	4	24099	651
	Genoa	1	22103	597
	Nelson Dewey	1	5852	158
		2	6504	176
	North Oak Creek	1	5083	137
		2	5005	135
		3	5229	141
		4	6154	166
	Pulliam	8	7312	198
	South Oak Creek	5	9416	254
		6	11723	317
		7	15754	426
		8	15375	415

(b) *Phase II allowances.* (1) The Administrator will allocate allowances to the unit account for each unit listed in Table 2 of this section in the amount specified in Table 2 Column E to be held in the future year subaccounts representing calendar years 2000 through 2009, except that units listed in both Table 2 and 4 will be allocated allowances as specified in Table 4 Column C, multiplied by .9011, reduced by 1.3185 times Table 2 Column B, and increased by Table 2 Columns C and D.

(2) The Administrator will allocate allowances to the unit account for each unit listed in Table 2 of this section in the amount specified in Table 2 Column I to be held in the future year subaccounts representing calendar years 2010 and each year thereafter, except that units listed in both Table 2 and 4 will be allocated allowances as specified in Table 4 Column F, multiplied by .8987, reduced by Table 2 Column G, and increased by Table 2 Column H.

TABLE 2. -- PHASE II ALLOWANCE ALLOCATIONS

State	Plant Name	Boiler [1]	Allowances for years 2000–2009					Allowances for years 2010 and thereafter			
			(A) [2] Unadjusted basic	(B) Special allowance reserve deduction	(C) Additional basic (§405(a)(3))	(D) Total Bonus	(E) [3] Total annual phase II	(F) [2] Unadjusted basic	(G) Special allowance reserve deduction	(H) Additional basic (§ 405(a)(3))	(I) [4] Total annual phase II
Alabama	Barry	1	4,437	112	0	0	3,851	4,437	112	0	3,876
Alabama	Barry	2	4,904	124	0	0	4,255	4,904	124	0	4,283
Alabama	Barry	3	10,069	255	0	0	8,736	10,069	254	0	8,795
Alabama	Barry	4	11,486	291	0	0	9,966	11,486	290	0	10,033
Alabama	Barry	5	28,361	718	0	0	24,625	28,361	716	0	24,790
Alabama	Charles R Lowman	1	1,350	34	0	671	1,843	1,350	34	0	1,178
Alabama	Charles R Lowman	2	8,028	203	0	0	6,966	8,028	203	0	7,012
Alabama	Charles R Lowman	3	6,737	171	0	0	5,846	6,737	170	0	5,885
Alabama	Chickasaw	110	126	3	0	0	110	126	3	0	110
Alabama	Colbert	1	6,515	165	152	0	5,805	6,515	164	152	5,843
Alabama	Colbert	2	7,348	186	171	0	6,548	7,348	186	171	6,589
Alabama	Colbert	3	7,393	187	172	0	6,588	7,393	187	172	6,629
Alabama	Colbert	4	7,399	187	172	0	6,593	7,399	187	172	6,635
Alabama	Colbert	5	17,846	452	415	0	15,901	17,846	451	415	16,002
Alabama	E C Gaston	1	8,687	220	202	0	7,740	8,687	219	202	7,790
Alabama	E C Gaston	2	8,900	225	207	0	7,930	8,900	225	207	7,981
Alabama	E C Gaston	3	8,769	222	205	0	7,832	8,769	222	205	7,882
Alabama	E C Gaston	4	9,254	234	215	0	8,245	9,254	234	215	8,298
Alabama	E C Gaston	5	28,724	726	669	0	25,591	28,724	726	669	25,758
Alabama	Future Fossil	**1	0	0	0	0	0	0	0	0	0
Alabama	Gadsden	1	2,237	57	0	0	1,941	2,237	56	0	1,954
Alabama	Gadsden	2	2,313	59	0	0	2,006	2,313	58	0	2,021
Alabama	Gorgas	5	1,427	36	0	507	1,746	1,427	36	0	1,246
Alabama	Gorgas	6	2,547	64	0	808	3,018	2,547	64	0	2,225
Alabama	Gorgas	7	2,852	72	0	643	3,118	2,852	72	0	2,491
Alabama	Gorgas	8	5,369	136	0	60	4,719	5,369	136	0	4,689
Alabama	Gorgas	9	5,307	134	0	103	4,708	5,307	134	0	4,635
Alabama	Gorgas	10	25,647	649	0	0	22,252	25,647	647	0	22,402
Alabama	Greene County	1	9,699	246	0	0	8,416	9,699	245	0	8,472
Alabama	Greene County	2	9,054	229	0	0	7,856	9,054	229	0	7,908
Alabama	James H Miller Jr	1	13,827	350	0	2,117	14,115	13,827	349	0	12,077
Alabama	James H Miller Jr	2	20,304	514	0	0	17,618	20,304	513	0	17,734
Alabama	James H Miller Jr	3	19,908	504	0	0	17,275	19,908	503	0	17,389
Alabama	James H Miller Jr	4	9,197	233	0	0	7,980	9,197	232	0	8,033
Alabama	Mcintosh–Caes	**1	1,071	27	0	0	930	1,071	27	0	936
Alabama	Mcintosh–Caes	**2	0	0	0	0	0	0	0	0	0
Alabama	Mcwilliams	**CT1	0	0	0	0	0	0	0	0	0
Alabama	Mcwilliams	**CT2	0	0	0	0	0	0	0	0	0
Alabama	Mcwilliams	**CT3	0	0	0	0	0	0	0	0	0
Alabama	Widows Creek	1	2,757	70	0	927	3,319	2,757	70	0	2,408
Alabama	Widows Creek	2	2,416	61	0	1,097	3,194	2,416	61	0	2,110
Alabama	Widows Creek	3	2,803	71	0	903	3,335	2,803	71	0	2,448
Alabama	Widows Creek	4	3,064	78	0	773	3,431	3,064	77	0	2,677
Alabama	Widows Creek	5	3,360	85	0	624	3,540	3,360	85	0	2,935
Alabama	Widows Creek	6	2,601	66	0	1,003	3,260	2,601	66	0	2,272
Alabama	Widows Creek	7	6,357	161	0	2,241	7,757	6,357	160	0	5,553
Alabama	Widows Creek	8	6,035	153	0	2,176	7,414	6,035	152	0	5,272

TABLE 2. -- PHASE II ALLOWANCE ALLOCATIONS

State	Plant Name	Boiler [1]	Allowances for years 2000–2009					Allowances for years 2010 and thereafter			
			(A) [2] Unadjusted basic	(B) Special allowance reserve deduction	(C) Additional basic (§405(a)(3))	(D) Total Bonus	(E) [3] Total annual phase II	(F) [2] Unadjusted basic	(G) Special allowance reserve deduction	(H) Additional basic (§ 405(a)(3))	(I) [4] Total annual phase II
Arizona	Agua Fria	1	1	0	0	53	54	39	1	0	34
Arizona	Agua Fria	2	1	0	0	64	65	44	1	0	39
Arizona	Agua Fria	3	1	0	0	76	77	77	2	0	67
Arizona	Apache Station	1	379	10	0	0	329	379	10	0	331
Arizona	Apache Station	2	1,620	41	0	191	1,597	1,620	41	0	1,415
Arizona	Apache Station	3	3,235	82	0	180	2,987	3,235	82	0	2,825
Arizona	Cholla	1	2,321	59	0	192	2,206	2,321	59	0	2,027
Arizona	Cholla	2	5,779	148	0	366	5,401	5,779	148	0	5,048
Arizona	Cholla	3	5,541	140	0	298	5,108	5,541	140	0	4,840
Arizona	Cholla	4	8,879	225	0	562	8,266	8,879	224	0	7,756
Arizona	Cholla	**5	0	0	0	0	0	0	0	0	0
Arizona	Coronado	U1B	5,930	150	0	544	5,690	5,930	150	0	5,179
Arizona	Coronado	U2B	6,234	158	0	447	5,856	6,234	157	0	5,448
Arizona	De Moss Petrie	4	0	0	0	0	0	0	0	0	0
Arizona	Gila Bend	**GT1	0	0	0	0	0	0	0	0	0
Arizona	Gila Bend	**GT2	0	0	0	0	0	0	0	0	0
Arizona	Gila Bend	**GT3	0	0	0	0	0	0	0	0	0
Arizona	Gila Bend	**GT4	0	0	0	0	0	0	0	0	0
Arizona	Irvington	1	0	0	0	16	16	15	0	0	13
Arizona	Irvington	2	1	0	0	27	28	45	1	0	39
Arizona	Irvington	3	0	0	0	0	0	2	0	0	2
Arizona	Irvington	4	3,200	61	0	54	2,831	3,200	61	0	2,795
Arizona	Kyrene	K-1	6	0	0	2	7	8	0	0	7
Arizona	Kyrene	K-2	8	0	0	11	18	18	0	0	16
Arizona	Navajo	1	28,462	721	0	1,314	26,009	28,462	719	0	24,860
Arizona	Navajo	2	26,641	674	0	947	24,062	26,641	673	0	23,270
Arizona	Navajo	3	27,028	684	0	1,389	24,840	27,028	682	0	23,806
Arizona	Ocotillo	1	10	0	0	47	56	46	1	0	40
Arizona	Ocotillo	2	113	3	0	32	130	147	4	0	128
Arizona	Saguaro	1	215	5	0	16	203	215	5	0	188
Arizona	Saguaro	2	5	0	0	19	24	26	1	0	22
Arizona	Springerville	1	6,957	176	0	476	6,515	6,957	176	0	6,076
Arizona	Springerville	2	6,577	166	0	0	5,706	6,577	166	0	5,745
Arizona	West Phoenix	4	8	0	0	4	11	10	0	0	9
Arizona	West Phoenix	6	14	0	0	9	22	17	0	0	15
Arizona	Yuma Axis	1	1	0	0	41	42	45	1	0	39
Arkansas	Carl Bailey	01	9	0	0	2	10	9	0	0	8
Arkansas	Cecil Lynch	1	0	0	0	0	0	0	0	0	0
Arkansas	Cecil Lynch	2	0	0	0	0	0	0	0	0	0
Arkansas	Cecil Lynch	3	0	0	0	3	3	0	0	0	0
Arkansas	Flint Creek	1	16,604	420	0	861	15,069	16,604	419	0	14,503
Arkansas	Hamilton Moses	1	0	0	0	0	0	0	0	0	0
Arkansas	Hamilton Moses	2	0	0	0	0	0	0	0	0	0
Arkansas	Harvey Couch	1	0	0	0	7	7	3	0	0	3
Arkansas	Harvey Couch	2	9	0	0	103	111	129	3	0	113
Arkansas	Independence	1	19,533	494	0	1,061	18,011	19,533	493	0	17,062
Arkansas	Independence	2	19,554	495	0	1,269	18,257	19,554	494	0	17,079

TABLE 2. -- PHASE II ALLOWANCE ALLOCATIONS

State	Plant Name	Boiler [1]	Allowances for years 2000–2009					Allowances for years 2010 and thereafter			
			(A) [2] Unadjusted basic	(B) Special allowance reserve deduction	(C) Additional basic (§405(a)(3))	(D) Total Bonus	(E) [3] Total annual phase II	(F) [2] Unadjusted basic	(G) Special allowance reserve deduction	(H) Additional basic (§ 405(a)(3))	(I) [4] Total annual phase II
Arkansas	Lake Catherine	1	0	0	0	0	0	0	0	0	0
Arkansas	Lake Catherine	2	0	0	0	0	0	0	0	0	0
Arkansas	Lake Catherine	3	4	0	0	4	8	7	0	0	6
Arkansas	Lake Catherine	4	130	3	0	42	155	385	10	0	336
Arkansas	Mcclellan	01	14	0	0	2	15	14	0	0	13
Arkansas	Na 2 -- 7246	**1	0	0	0	0	0	0	0	0	0
Arkansas	Robert E Ritchie	1	7	0	0	47	53	76	2	0	66
Arkansas	Robert E Ritchie	2	2,439	62	0	13	2,130	2,439	62	0	2,130
Arkansas	Thomas Fitzhugh	1	0	0	0	1	1	1	0	0	1
Arkansas	White Bluff	1	22,946	581	0	859	20,766	22,946	579	0	20,043
Arkansas	White Bluff	2	26,304	666	0	881	23,703	26,304	664	0	22,976
California	Alamitos	1	3,083	78	0	76	2,751	3,083	78	0	2,693
California	Alamitos	2	3	0	0	102	105	19	0	0	17
California	Alamitos	3	15	0	0	276	290	92	2	0	81
California	Alamitos	4	618	16	0	278	614	618	16	0	539
California	Alamitos	5	4,410	112	0	366	4,193	4,410	111	0	3,852
California	Alamitos	6	1,066	27	0	549	1,476	1,066	27	0	933
California	Avon	1	0	0	0	17	17	15	0	0	13
California	Avon	2	0	0	0	0	0	16	0	0	14
California	Avon	3	0	0	0	0	0	16	0	0	14
California	Broadway	B1	142	4	0	3	126	142	4	0	124
California	Broadway	B2	176	4	0	10	163	176	4	0	154
California	Broadway	B3	12	0	0	63	74	81	2	0	71
California	Contra Costa	1	1	0	0	124	125	17	0	0	14
California	Contra Costa	2	2	0	0	0	2	26	0	0	23
California	Contra Costa	3	0	0	0	0	0	23	0	0	20
California	Contra Costa	4	0	0	0	0	0	16	0	0	14
California	Contra Costa	5	0	0	0	0	0	17	0	0	14
California	Contra Costa	6	0	0	0	0	0	14	0	0	13
California	Contra Costa	7	3	0	0	25	28	32	1	0	28
California	Contra Costa	8	1	0	0	52	53	46	1	0	40
California	Contra Costa	9	20	1	0	339	356	346	9	0	302
California	Contra Costa	10	4,538	115	0	315	4,252	4,538	115	0	3,963
California	Cool Water	1	2	0	0	8	10	12	0	0	11
California	Cool Water	2	1	0	0	5	6	9	0	0	8
California	El Centro	2	312	8	0	15	285	312	8	0	272
California	El Centro	3	661	17	0	36	610	661	17	0	577
California	El Centro	4	639	16	0	27	582	639	16	0	558
California	El Segundo	1	407	10	0	83	437	407	10	0	356
California	El Segundo	2	13	0	0	78	90	71	2	0	62
California	El Segundo	3	35	1	0	151	182	195	5	0	170
California	El Segundo	4	74	2	0	305	370	414	10	0	362
California	Encina	1	509	13	0	46	487	509	13	0	444
California	Encina	2	1,166	30	0	92	1,123	1,166	30	0	1,036
California	Encina	3	776	20	0	56	731	776	20	0	677
California	Encina	4	2,071	52	0	134	1,932	2,071	52	0	1,809
California	Encina	5	2,736	69	0	100	2,474	2,736	69	0	2,390

TABLE 2. -- PHASE II ALLOWANCE ALLOCATIONS

State	Plant Name	Boiler [1]	Allowances for years 2000–2009					Allowances for years 2010 and thereafter			
			(A) [2] Unadjusted basic	(B) Special allowance reserve deduction	(C) Additional basic (§405(a)(3))	(D) Total Bonus	(E) [3] Total annual phase II	(F) [2] Unadjusted basic	(G) Special allowance reserve deduction	(H) Additional basic (§ 405(a)(3))	(I) [4] Total annual phase II
California	Etiwanda	1	107	3	0	23	115	107	3	0	93
California	Etiwanda	2	3	0	0	26	29	20	1	0	17
California	Etiwanda	3	1,334	34	0	205	1,362	1,334	34	0	1,165
California	Etiwanda	4	53	1	0	214	261	309	8	0	270
California	Glenarm	16	0	0	0	0	0	0	0	0	0
California	Glenarm	17	0	0	0	0	0	0	0	0	0
California	Grayson	4	100	3	0	15	101	100	3	0	87
California	Grayson	5	26	1	0	14	36	48	1	0	42
California	Harbor Gen Station	1	70	2	0	7	68	70	2	0	61
California	Harbor Gen Station	2	122	3	0	14	120	122	3	0	107
California	Harbor Gen Station	3	98	2	0	8	94	98	2	0	86
California	Harbor Gen Station	4	112	3	0	6	103	112	3	0	98
California	Harbor Gen Station	5	175	4	0	18	170	175	4	0	153
California	Haynes Gen Station	1	652	17	0	111	677	652	16	0	570
California	Haynes Gen Station	2	374	9	0	10	335	374	9	0	327
California	Haynes Gen Station	3	1,291	33	0	115	1,234	1,291	33	0	1,127
California	Haynes Gen Station	4	971	25	0	152	994	971	25	0	848
California	Haynes Gen Station	5	1,375	35	0	196	1,391	1,375	35	0	1,201
California	Haynes Gen Station	6	1,449	37	0	258	1,516	1,449	37	0	1,265
California	Highgrove	1	3	0	0	1	4	3	0	0	3
California	Highgrove	2	0	0	0	1	1	0	0	0	0
California	Highgrove	3	0	0	0	1	1	1	0	0	1
California	Highgrove	4	1	0	0	2	3	3	0	0	3
California	Humboldt Bay	1	389	10	0	16	356	389	10	0	340
California	Humboldt Bay	2	2	0	0	22	24	30	1	0	26
California	Hunters Point	3	5	0	0	71	76	53	1	0	47
California	Hunters Point	4	5	0	0	0	5	54	1	0	48
California	Hunters Point	5	2	0	0	72	74	48	1	0	42
California	Hunters Point	6	1	0	0	0	1	42	1	0	37
California	Hunters Point	7	9	0	0	184	192	194	5	0	169
California	Huntington Beach	1	1,315	33	0	173	1,314	1,315	33	0	1,149
California	Huntington Beach	2	1,106	28	0	166	1,126	1,106	28	0	966
California	Huntington Beach	3	23	1	0	141	161	71	2	0	62
California	Huntington Beach	4	26	1	0	152	176	87	2	0	76
California	Kern	1	0	0	0	3	3	2	0	0	2
California	Kern	2	0	0	0	0	0	3	0	0	3
California	Kern	3	0	0	0	13	13	3	0	0	3
California	Kern	4	0	0	0	0	0	3	0	0	3
California	Magnolia	M4	36	1	0	4	37	38	1	0	33
California	Mandalay	1	1,321	33	0	223	1,369	1,321	33	0	1,154
California	Mandalay	2	1,243	31	0	204	1,263	1,243	31	0	1,086
California	Martinez	1	1	0	0	0	1	1	0	0	1
California	Martinez	2	1	0	0	0	1	1	0	0	1
California	Martinez	3	1	0	0	0	1	1	0	0	1
California	Morro Bay	1	1,609	41	0	153	1,549	1,609	41	0	1,406
California	Morro Bay	2	4	0	0	135	139	112	3	0	98
California	Morro Bay	3	3,988	101	0	332	3,793	3,988	101	0	3,483

TABLE 2. -- PHASE II ALLOWANCE ALLOCATIONS

State	Plant Name	Boiler [1]	Allowances for years 2000–2009					Allowances for years 2010 and thereafter			
			(A) [2] Unadjusted basic	(B) Special allowance reserve deduction	(C) Additional basic (§405(a)(3))	(D) Total Bonus	(E) [3] Total annual phase II	(F) [2] Unadjusted basic	(G) Special allowance reserve deduction	(H) Additional basic (§ 405(a)(3))	(I) [4] Total annual phase II
California	Morro Bay	4	3,269	83	0	173	3,027	3,269	83	0	2,873
California	Moss Landing	1	0	0	0	121	121	16	0	0	16
California	Moss Landing	2	0	0	0	0	0	16	0	0	15
California	Moss Landing	3	0	0	0	0	0	21	0	0	16
California	Moss Landing	4	0	0	0	0	0	23	0	0	20
California	Moss Landing	5	0	0	0	0	0	22	0	0	19
California	Moss Landing	6	0	0	0	0	0	15	0	0	14
California	Moss Landing	7	5	0	0	74	79	59	1	0	52
California	Moss Landing	8	497	13	0	32	462	497	13	0	434
California	Moss Landing	6–1	9,266	235	0	812	8,654	9,266	234	0	8,095
California	Moss Landing	7–1	66	2	0	916	975	792	20	0	692
California	Oleum	1	140	4	0	24	146	140	4	0	122
California	Oleum	2	156	4	0	0	136	156	4	0	136
California	Oleum	3	276	8	0	0	240	276	8	0	242
California	Oleum	4	116	2	0	0	102	116	2	0	102
California	Oleum	5	200	6	0	0	172	200	6	0	174
California	Oleum	6	232	6	0	0	202	232	6	0	202
California	Olive	01	137	3	0	12	131	137	3	0	120
California	Olive	02	10	0	0	16	25	53	1	0	47
California	Ormond Beach	1	4,317	109	0	742	4,466	4,317	109	0	3,771
California	Ormond Beach	2	4,666	116	0	500	4,550	4,666	116	0	4,077
California	Pittsburg	1	1,704	43	0	149	1,626	1,704	43	0	1,468
California	Pittsburg	2	1,401	35	0	124	1,340	1,401	35	0	1,224
California	Pittsburg	3	1,646	42	0	145	1,573	1,646	42	0	1,437
California	Pittsburg	4	1,656	42	0	132	1,566	1,656	42	0	1,446
California	Pittsburg	5	10	0	0	276	285	326	8	0	267
California	Pittsburg	6	4,081	103	0	183	3,725	4,081	103	0	3,565
California	Pittsburg	7	26	1	0	718	740	713	18	0	623
California	Potrero	3–1	16	0	0	307	321	304	8	0	265
California	Redondo Beach	5	13	0	0	68	80	144	4	0	125
California	Redondo Beach	6	11	0	0	95	106	117	3	0	102
California	Redondo Beach	7	49	1	0	511	554	551	14	0	481
California	Redondo Beach	8	50	1	0	552	596	565	14	0	494
California	Redondo Beach	11	0	0	0	36	36	4	0	0	4
California	Redondo Beach	12	0	0	0	0	0	2	0	0	2
California	Redondo Beach	13	0	0	0	0	0	4	0	0	4
California	Redondo Beach	14	0	0	0	0	0	4	0	0	4
California	Redondo Beach	15	0	0	0	0	0	3	0	0	3
California	Redondo Beach	16	0	0	0	0	0	5	0	0	5
California	Redondo Beach	17	0	0	0	0	0	6	0	0	6
California	San Bernardino	1	120	3	0	13	117	120	3	0	105
California	San Bernardino	2	7	0	0	11	17	22	1	0	19
California	Scattergood Gen Sta	1	732	19	0	112	747	732	18	0	640
California	Scattergood Gen Sta	2	652	17	0	86	654	652	16	0	570
California	Scattergood Gen Sta	3	4	0	0	256	262	285	7	0	249
California	Silver Gate	1	0	0	0	0	0	0	0	0	0
California	Silver Gate	2	0	0	0	0	0	0	0	0	0

TABLE 2. -- PHASE II ALLOWANCE ALLOCATIONS

State	Plant Name	Boiler [1]	Allowances for years 2000–2009					Allowances for years 2010 and thereafter			
			(A) [2] Unadjusted basic	(B) Special allowance reserve deduction	(C) Additional basic (§405(a)(3))	(D) Total Bonus	(E) [3] Total annual phase II	(F) [2] Unadjusted basic	(G) Special allowance reserve deduction	(H) Additional basic (§ 405(a)(3))	(I) [4] Total annual phase II
California	Silver Gate	3	0	0	0	0	0	0	0	0	0
California	Silver Gate	4	0	0	0	0	0	0	0	0	0
California	Silver Gate	5	0	0	0	0	0	0	0	0	0
California	Silver Gate	6	0	0	0	0	0	0	0	0	0
California	South Bay	1	2,627	66	0	193	2,473	2,627	66	0	2,295
California	South Bay	2	1,920	49	0	95	1,760	1,920	48	0	1,676
California	South Bay	3	2,309	58	0	157	2,161	2,309	58	0	2,017
California	South Bay	4	632	16	0	50	599	632	16	0	552
California	Valley Gen Station	1	115	3	0	21	121	115	3	0	100
California	Valley Gen Station	2	136	3	0	21	140	136	3	0	119
California	Valley Gen Station	3	444	11	0	0	366	444	11	0	388
California	Valley Gen Station	4	337	9	0	57	349	337	9	0	294
Colorado	Arapahoe	1	237	6	0	14	220	237	6	0	207
Colorado	Arapahoe	2	262	7	0	18	245	262	7	0	228
Colorado	Arapahoe	3	196	5	0	10	180	196	5	0	171
Colorado	Arapahoe	4	2,066	53	0	101	1,911	2,066	53	0	1,822
Colorado	Cameo	2	972	25	0	54	897	972	25	0	849
Colorado	Cherokee	1	2,322	59	0	106	2,120	2,322	59	0	2,028
Colorado	Cherokee	2	3,105	79	0	119	2,813	3,105	78	0	2,713
Colorado	Cherokee	3	4,063	103	0	205	3,730	4,063	103	0	3,548
Colorado	Cherokee	4	8,135	206	0	416	7,475	8,135	205	0	7,106
Colorado	Comanche	1	8,399	213	0	348	7,635	8,399	212	0	7,336
Colorado	Comanche	2	7,357	186	0	476	6,661	7,357	186	0	6,426
Colorado	Craig	C1	8,758	222	0	554	8,153	8,758	221	0	7,650
Colorado	Craig	C2	8,387	212	0	506	7,785	8,387	212	0	7,326
Colorado	Craig	C3	2,451	62	0	456	2,584	2,451	62	0	2,141
Colorado	Hayden	H1	6,589	167	0	296	6,014	6,589	166	0	5,756
Colorado	Hayden	H2	10,050	254	0	435	9,155	10,050	254	0	8,778
Colorado	Martin Drake	5	1,242	31	0	83	1,141	1,242	31	0	1,085
Colorado	Martin Drake	6	2,180	55	0	122	2,013	2,180	55	0	1,904
Colorado	Martin Drake	7	3,471	88	0	182	3,193	3,471	88	0	3,031
Colorado	Nucla	1	1,282	33	0	0	1,113	1,282	33	0	1,118
Colorado	Pawnee	1	15,698	397	0	705	14,327	15,698	396	0	13,712
Colorado	Pawnee	**2	0	0	0	0	0	0	0	0	0
Colorado	Rawhide	101	1,542	39	0	451	1,769	1,542	39	0	1,347
Colorado	Ray D Nixon	1	4,811	122	0	267	4,441	4,811	121	0	4,203
Colorado	Ray D Nixon	**NA1	0	0	0	0	0	0	0	0	0
Colorado	Valmont	5	3,403	86	0	156	3,112	3,403	86	0	2,972
Colorado	Valmont	11	0	0	0	4	4	0	0	0	0
Colorado	Valmont	12	0	0	0	0	0	0	0	0	0
Colorado	Valmont	13	0	0	0	0	0	0	0	0	0
Colorado	Valmont	14	0	0	0	0	0	0	0	0	0
Colorado	Valmont	21	20	0	0	0	20	20	0	0	18
Colorado	Valmont	22	0	0	0	0	0	0	0	0	0
Colorado	Valmont	23	0	0	0	0	0	0	0	0	0
Colorado	Valmont	24	0	0	0	0	0	0	0	0	0
Colorado	Zuni	1	389	10	0	0	338	389	10	0	340

TABLE 2. -- PHASE II ALLOWANCE ALLOCATIONS

State	Plant Name	Boiler [1]	Allowances for years 2000–2009					Allowances for years 2010 and thereafter			
			(A) [2] Unadjusted basic	(B) Special allowance reserve deduction	(C) Additional basic (§405(a)(3))	(D) Total Bonus	(E) [3] Total annual phase II	(F) [2] Unadjusted basic	(G) Special allowance reserve deduction	(H) Additional basic (§ 405(a)(3))	(I) [4] Total annual phase II
Colorado	Zuni	2	0	0	0	0	0	7	0	0	6
Colorado	Zuni	3	3	0	0	2	5	10	0	0	9
Connecticut	Bridgeport Harbor	BHB1	2,375	60	0	0	2,061	2,375	60	0	2,074
Connecticut	Bridgeport Harbor	BHB2	5,401	137	0	0	4,687	5,401	136	0	4,718
Connecticut	Bridgeport Harbor	BHB3	13,119	332	0	0	11,384	13,119	331	0	11,459
Connecticut	Devon	3	1,119	28	0	0	971	1,119	28	0	978
Connecticut	Devon	6	1,026	26	0	0	891	1,026	26	0	896
Connecticut	Devon	7	3,208	81	0	0	2,784	3,208	81	0	2,802
Connecticut	Devon	8	3,431	87	0	0	2,978	3,431	87	0	2,996
Connecticut	Devon	4A	195	5	0	0	169	195	5	0	170
Connecticut	Devon	4B	196	5	0	0	170	196	5	0	171
Connecticut	Devon	5A	177	4	0	0	154	177	4	0	155
Connecticut	Devon	5B	177	4	0	0	154	177	4	0	155
Connecticut	English	EB13	129	3	0	0	112	129	3	0	113
Connecticut	English	EB14	180	5	0	0	155	180	5	0	157
Connecticut	South Meadow	11	508	12	0	0	442	508	12	0	444
Connecticut	South Meadow	12	466	12	0	0	404	466	12	0	406
Connecticut	South Meadow	13	812	20	0	0	706	812	20	0	710
Connecticut	Middletown	1	527	13	0	0	457	527	13	0	461
Connecticut	Middletown	2	1,519	38	0	0	1,318	1,519	38	0	1,327
Connecticut	Middletown	3	3,816	97	0	0	3,311	3,816	96	0	3,333
Connecticut	Middletown	4	2,730	69	0	0	2,369	2,730	69	0	2,384
Connecticut	Montville	5	1,380	35	0	0	1,198	1,380	35	0	1,205
Connecticut	Montville	6	6,486	164	0	0	5,626	6,486	164	0	5,665
Connecticut	New Haven Harbor	NHB1	14,934	378	0	0	12,956	14,934	377	0	13,044
Connecticut	Norwalk Harbor	1	5,875	149	0	0	5,097	5,875	148	0	5,132
Connecticut	Norwalk Harbor	2	6,236	158	0	0	5,410	6,236	157	0	5,447
Delaware	Edge Moor	3	4,065	103	0	0	3,527	4,065	103	0	3,550
Delaware	Edge Moor	4	7,194	182	0	0	6,243	7,194	182	0	6,283
Delaware	Edge Moor	5	7,364	187	0	0	6,406	7,364	186	0	6,450
Delaware	Hay Road	**3	181	5	0	0	156	181	5	0	156
Delaware	Indian River	1	3,425	87	0	0	2,972	3,425	86	0	2,992
Delaware	Indian River	2	3,636	92	0	0	3,156	3,636	92	0	3,176
Delaware	Indian River	3	6,218	157	0	0	5,396	6,218	157	0	5,431
Delaware	Indian River	4	15,328	388	0	0	13,300	15,326	387	0	13,386
Delaware	Mckee Run	3	2,110	53	0	739	2,570	2,110	53	0	1,843
Delaware	Vansant	**11	157	4	0	0	136	157	4	0	137
District Of Colu	Benning	15	591	15	0	0	513	591	15	0	516
District Of Colu	Benning	16	978	25	0	0	848	976	25	0	854
Florida	Anclote	1	11,740	297	0	2,744	12,931	11,737	296	0	10,252
Florida	Anclote	2	12,421	314	0	2,075	12,853	12,416	313	0	10,847
Florida	Arvah B Hopkins	1	51	1	0	35	60	96	2	0	64
Florida	Arvah B Hopkins	2	6,311	160	0	0	5,476	6,310	159	0	5,512
Florida	Avon Park	2	561	14	0	0	487	560	14	0	489
Florida	Big Bend	BB01	13,864	351	0	0	12,030	13,863	350	0	12,109
Florida	Big Bend	BB02	13,938	353	0	0	12,094	13,937	352	0	12,173
Florida	Big Bend	BB03	13,078	331	0	0	11,346	13,077	330	0	11,422

TABLE 2. -- PHASE II ALLOWANCE ALLOCATIONS

State	Plant Name	Boiler [1]	Allowances for years 2000–2009					Allowances for years 2010 and thereafter			
			(A) [2] Unadjusted basic	(B) Special allowance reserve deduction	(C) Additional basic (§405(a)(3))	(D) Total Bonus	(E) [3] Total annual phase II	(F) [2] Unadjusted basic	(G) Special allowance reserve deduction	(H) Additional basic (§ 405(a)(3))	(I) [4] Total annual phase II
Florida	Big Bend	BB04	10,036	254	0	0	8,709	10,035	253	0	8,766
Florida	C D McIntosh Jr	1	1,033	26	0	0	897	1,032	26	0	901
Florida	C D McIntosh Jr	2	1,175	30	0	0	1,019	1,175	30	0	1,026
Florida	C D McIntosh Jr	3	11,348	287	0	0	9,848	11,348	286	0	9,913
Florida	Cape Canaveral	PCC1	4,821	122	0	0	4,183	4,818	122	0	4,208
Florida	Cape Canaveral	PCC2	5,664	143	0	0	4,915	5,662	143	0	4,946
Florida	Crist	1	40	1	0	0	35	40	1	0	35
Florida	Crist	2	0	0	0	3	3	3	0	0	3
Florida	Crist	3	0	0	0	4	4	4	0	0	4
Florida	Crist	4	2,819	71	0	0	2,446	2,819	71	0	2,462
Florida	Crist	5	2,776	70	0	0	2,410	2,776	70	0	2,425
Florida	Crist	6	9,595	243	0	0	8,325	9,594	242	0	8,380
Florida	Crist	7	14,307	362	0	0	12,415	14,305	361	0	12,495
Florida	Crystal River	1	14,198	359	0	0	12,320	14,197	358	0	12,401
Florida	Crystal River	2	16,334	413	0	0	14,173	16,334	412	0	14,268
Florida	Crystal River	4	27,029	684	0	0	23,452	27,026	682	0	23,607
Florida	Crystal River	5	28,861	732	0	0	25,040	28,860	730	0	25,207
Florida	Ct	**1	0	0	0	0	0	0	0	0	0
Florida	Ct	**2	0	0	0	0	0	0	0	0	0
Florida	Ct	**3	0	0	0	0	0	0	0	0	0
Florida	Ct	**4	0	0	0	0	0	0	0	0	0
Florida	Cutler	PCU5	0	0	0	0	0	4	0	0	4
Florida	Cutler	PCU6	0	0	0	0	0	10	0	0	9
Florida	Debary	**7	805	20	0	0	699	805	20	0	703
Florida	Debary	**8	805	20	0	0	699	805	20	0	703
Florida	Debary	**9	805	20	0	0	699	805	20	0	703
Florida	Debary	**10	805	20	0	0	699	805	20	0	703
Florida	Deerhaven	B1	44	1	0	59	98	130	3	0	114
Florida	Deerhaven	B2	9,451	239	0	0	8,201	9,450	239	0	8,254
Florida	Deerhaven	**NA1	0	0	0	0	0	0	0	0	0
Florida	Deerhaven	**NA2	0	0	0	0	0	0	0	0	0
Florida	F J Gannon	GB01	3,829	97	0	490	3,812	3,826	97	0	3,343
Florida	F J Gannon	GB02	4,730	120	0	283	4,387	4,729	119	0	4,131
Florida	F J Gannon	GB03	6,472	164	0	0	5,615	6,472	163	0	5,653
Florida	F J Gannon	GB04	7,055	179	0	50	6,171	7,055	178	0	6,162
Florida	F J Gannon	GB05	7,471	189	0	0	6,482	7,471	189	0	6,525
Florida	F J Gannon	GB06	11,520	292	0	0	9,996	11,520	291	0	10,062
Florida	Fort Myers	PFM1	3,639	92	0	0	3,158	3,637	92	0	3,177
Florida	Fort Myers	PFM2	10,803	273	0	0	9,374	10,800	273	0	9,433
Florida	G E Turner	2	92	2	0	461	542	92	2	0	81
Florida	G E Turner	3	820	21	0	0	712	819	21	0	715
Florida	G E Turner	4	696	'18	0	0	603	696	18	0	608
Florida	Henry D King	7	64	2	0	7	63	74	2	0	65
Florida	Henry D King	8	6	0	0	21	26	39	1	0	34
Florida	Higgins	1	481	12	0	0	418	481	12	0	420
Florida	Higgins	2	541	14	0	0	469	541	14	0	472
Florida	Higgins	3	495	13	0	536	964	494	12	0	432

TABLE 2. — — PHASE II ALLOWANCE ALLOCATIONS

State	Plant Name	Boiler [1]	Allowances for years 2000–2009					Allowances for years 2010 and thereafter			
			(A) [2] Unadjusted basic	(B) Special allowance reserve deduction	(C) Additional basic (§405(a)(3))	(D) Total Bonus	(E) [3] Total annual phase II	(F) [2] Unadjusted basic	(G) Special allowance reserve deduction	(H) Additional basic (§ 405(a)(3))	(I) [4] Total annual phase II
Florida	Hookers Point	HB01	201	4	0	0	177	201	4	0	177
Florida	Hookers Point	HB02	231	5	0	0	202	231	5	0	202
Florida	Hookers Point	HB03	530	13	0	0	461	529	13	0	462
Florida	Hookers Point	HB04	799	20	0	0	692	796	20	0	695
Florida	Hookers Point	HB05	1,422	36	0	0	1,234	1,418	36	0	1,238
Florida	Hookers Point	HB06	545	14	0	0	472	544	14	0	475
Florida	Indian River [1]	1	1,359	34	0	0	1,180	1,356	34	0	1,186
Florida	Indian River	2	1,791	45	0	0	1,555	1,790	45	0	1,564
Florida	Indian River	3	4,163	105	0	0	3,612	4,162	105	0	3,635
Florida	Indian River	**C	0	0	0	0	0	0	0	0	0
Florida	J D Kennedy	8	223	6	0	0	193	222	6	0	194
Florida	J D Kennedy	9	630	16	0	0	547	630	16	0	550
Florida	J D Kennedy	10	2,257	57	0	0	1,959	2,257	57	0	1,971
Florida	J R Kelly	JRK8	44	1	0	19	58	77	2	0	67
Florida	Smith	1	7,402	187	0	0	6,424	7,402	187	0	6,466
Florida	Smith	2	8,688	220	0	0	7,539	8,686	219	0	7,589
Florida	Larsen Memorial	7	350	9	0	0	303	350	9	0	306
Florida	Larsen Memorial	**8	759	19	0	0	659	759	19	0	663
Florida	Larsen Memorial	**9	0	0	0	0	0	0	0	0	0
Florida	Lauderdale	PFL4	896	23	0	0	776	895	23	0	781
Florida	Lauderdale	PFL5	918	23	0	0	796	916	23	0	802
Florida	Manatee	PMT1	15,736	396	0	0	13,654	15,734	397	0	13,743
Florida	Manatee	PMT2	14,499	367	0	0	12,581	14,494	366	0	12,660
Florida	Martin	PMR1	5,813	147	0	0	5,044	5,811	147	0	5,075
Florida	Martin	PMR2	6,895	175	0	0	5,982	6,892	174	0	6,020
Florida	Na 1 — — 7236	**1	0	0	0	0	0	0	0	0	0
Florida	Northside	1	5,566	141	0	1,334	6,182	5,566	141	0	4,879
Florida	Northside	2	1,169	30	0	5,220	6,251	1,166	30	0	1,036
Florida	Northside	3	7,586	192	0	4,478	11,061	7,584	191	0	6,625
Florida	P L Bartow	1	2,801	71	0	355	2,765	2,800	71	0	2,445
Florida	P L Bartow	2	2,773	70	0	534	2,941	2,772	70	0	2,421
Florida	P L Bartow	3	6,203	157	0	0	5,383	6,202	157	0	5,417
Florida	Port Everglades	PPE1	2,672	68	0	0	2,318	2,671	67	0	2,333
Florida	Port Everglades	PPE2	2,755	70	0	0	2,391	2,754	70	0	2,406
Florida	Port Everglades	PPE3	6,718	170	0	0	5,830	6,717	170	0	5,867
Florida	Port Everglades	PPE4	6,811	172	0	0	5,911	6,810	172	0	5,948
Florida	Putnam	HRSG11	1,879	48	0	0	1,629	1,879	47	0	1,642
Florida	Putnam	HRSG12	1,879	48	0	0	1,629	1,879	47	0	1,642
Florida	Putnam	HRSG21	1,791	45	0	0	1,555	1,790	45	0	1,564
Florida	Putnam	HRSG22	1,791	45	0	0	1,555	1,790	45	0	1,564
Florida	Riviera	PRV2	106	3	0	0	92	106	3	0	92
Florida	Riviera	PRV3	4,081	103	0	0	3,542	4,080	103	0	3,564
Florida	Riviera	PRV4	4,048	102	0	0	3,514	4,047	102	0	3,536
Florida	S O Purdom	7	506	13	0	0	436	506	13	0	442
Florida	Sanford	PSN3	1,236	31	0	0	1,073	1,234	31	0	1,078
Florida	Sanford	PSN4	3,776	96	0	5,290	8,568	3,771	95	0	3,294
Florida	Sanford	PSN5	3,662	93	0	0	3,177	3,656	92	0	3,194

TABLE 2. -- PHASE II ALLOWANCE ALLOCATIONS

State	Plant Name	Boiler [1]	Allowances for years 2000–2009					Allowances for years 2010 and thereafter			
			(A) [2] Unadjusted basic	(B) Special allowance reserve deduction	(C) Additional basic (§405(a)(3))	(D) Total Bonus	(E) [3] Total annual phase II	(F) [2] Unadjusted basic	(G) Special allowance reserve deduction	(H) Additional basic (§ 405(a)(3))	(I) [4] Total annual phase II
Florida	Scholz	1	2,238	57	0	0	1,942	2,238	56	0	1,955
Florida	Scholz	2	2,343	59	0	0	2,033	2,343	59	0	2,047
Florida	Seminole	1	21,011	532	0	0	18,232	21,011	530	0	18,353
Florida	Seminole	2	21,011	532	0	0	18,232	21,011	530	0	18,353
Florida	Southside	1	1,063	27	0	0	923	1,063	27	0	928
Florida	Southside	2	1,100	28	0	0	954	1,099	28	0	960
Florida	Southside	3	258	7	0	0	223	257	6	0	225
Florida	Southside	4	704	18	0	0	610	704	18	0	615
Florida	Southside	5	2,070	52	0	0	1,797	2,070	52	0	1,808
Florida	St Johns River Power	1	13,237	335	0	0	11,486	13,236	334	0	11,561
Florida	St Johns River Power	2	12,996	329	0	0	11,279	12,996	328	0	11,353
Florida	Stanton Energy	1	12,906	327	0	0	11,199	12,906	326	0	11,273
Florida	Stanton Energy	2	0	0	0	0	0	0	0	0	0
Florida	Stock Island	1	2,939	74	0	0	2,550	2,939	74	0	2,567
Florida	Stock Island D 1	**NA1	114	3	0	0	99	114	3	0	99
Florida	Stock Island D 2	**NA2	114	3	0	0	99	114	3	0	99
Florida	Suwannee River	1	289	7	0	0	251	289	7	0	253
Florida	Suwannee River	2	288	7	0	0	251	288	7	0	252
Florida	Suwannee River	3	739	19	0	0	641	738	19	0	644
Florida	Tom G Smith	S-3	1	0	0	8	9	12	0	0	11
Florida	Tom G Smith	S-4	75	2	0	14	80	91	2	0	80
Florida	Turkey Point	PTP1	6,705	170	0	0	5,818	6,704	169	0	5,856
Florida	Turkey Point	PTP2	6,755	171	0	0	5,861	6,754	171	0	5,899
Florida	Vero Beach Municipal	3	360	9	0	0	312	360	9	0	315
Florida	Vero Beach Municipal	4	97	2	0	21	106	132	3	0	116
Florida	Vero Beach Municipal	**5	362	9	0	0	314	362	9	0	316
Georgia	Arkwright	1	1,472	37	0	160	1,438	1,472	37	0	1,286
Georgia	Arkwright	2	1,544	39	0	119	1,458	1,544	39	0	1,349
Georgia	Arkwright	3	1,759	45	0	0	1,526	1,759	44	0	1,537
Georgia	Arkwright	4	1,433	36	0	0	1,244	1,433	36	0	1,252
Georgia	Atkinson	A2	1	0	0	3	4	4	0	0	4
Georgia	Atkinson	A3	2	0	0	4	6	6	0	0	5
Georgia	Atkinson	A4	2	0	0	3	5	5	0	0	4
Georgia	Atkinson	A1A	1	0	0	1	2	2	0	0	2
Georgia	Atkinson	A1B	1	0	0	1	2	2	0	0	2
Georgia	Bowen	1BLR	26,288	665	612	0	23,421	26,288	664	612	23,573
Georgia	Bowen	2BLR	27,036	684	629	0	24,087	27,036	683	629	24,244
Georgia	Bowen	3BLR	34,442	873	803	0	30,685	34,442	870	803	30,867
Georgia	Bowen	4BLR	34,434	873	802	0	30,677	34,434	870	802	30,879
Georgia	Hammond	1	4,215	107	98	0	3,755	4,215	106	98	3,780
Georgia	Hammond	2	4,424	112	103	0	3,943	4,424	112	103	3,967
Georgia	Hammond	3	4,277	108	100	0	3,811	4,277	108	100	3,836
Georgia	Hammond	4	18,068	457	421	0	16,100	16,068	456	421	16,203
Georgia	Harllee Branch	1	11,265	285	0	0	9,775	11,265	284	0	9,840
Georgia	Harllee Branch	2	13,325	337	0	0	11,564	13,325	336	0	11,639
Georgia	Harllee Branch	3	18,333	464	0	0	15,907	18,333	463	0	16,013
Georgia	Harllee Branch	4	18,193	461	0	0	15,786	18,193	459	0	15,891

TABLE 2. -- PHASE II ALLOWANCE ALLOCATIONS

State	Plant Name	Boiler [1]	Allowances for years 2000–2009					Allowances for years 2010 and thereafter			
			(A) [2] Unadjusted basic	(B) Special allowance reserve deduction	(C) Additional basic (§405(a)(3))	(D) Total Bonus	(E) [3] Total annual phase II	(F) [2] Unadjusted basic	(G) Special allowance reserve deduction	(H) Additional basic (§ 405(a)(3))	(I) [4] Total annual phase II
Georgia	Jack Mcdonough	MB1	9,556	242	222	0	8,514	9,556	241	222	8,569
Georgia	Jack Mcdonough	MB2	9,890	250	230	0	8,812	9,890	250	230	8,866
Georgia	McIntosh	1	6,348	161	0	0	5,508	6,348	160	0	5,545
Georgia	Mcmanus	1	102	3	0	755	843	102	3	0	89
Georgia	Mcmanus	2	226	6	0	1,082	1,278	226	6	0	197
Georgia	Mitchell	3	6,242	158	0	0	5,416	6,242	156	0	5,452
Georgia	Port Wentworth	1	1,748	44	0	0	1,517	1,748	44	0	1,527
Georgia	Port Wentworth	2	1,672	42	0	46	1,498	1,672	42	0	1,461
Georgia	Port Wentworth	3	3,386	86	0	1	2,939	3,386	85	0	2,956
Georgia	Port Wentworth	4	499	13	0	0	432	499	13	0	435
Georgia	Riverside	12	5	0	0	0	5	5	0	0	4
Georgia	Scherer	1	24,092	610	0	0	20,904	24,092	606	0	21,044
Georgia	Scherer	2	24,263	614	0	0	21,052	24,263	613	0	21,192
Georgia	Scherer	3	24,302	615	0	0	21,086	24,302	614	0	21,227
Georgia	Scherer	4	24,274	614	0	0	21,062	24,274	613	0	21,202
Georgia	Wansley	1	33,969	861	791	0	30,262	33,969	859	791	30,461
Georgia	Wansley	2	31,404	796	731	0	27,977	31,404	794	731	28,161
Georgia	Yates	Y1BR	3,459	88	81	0	3,081	3,459	87	81	3,103
Georgia	Yates	Y2BR	3,379	86	79	0	3,011	3,379	85	79	3,031
Georgia	Yates	Y3BR	3,337	84	78	0	2,974	3,337	84	78	2,993
Georgia	Yates	Y4BR	4,278	108	100	0	3,812	4,278	108	100	3,837
Georgia	Yates	Y5BR	4,515	114	105	0	4,023	4,515	114	105	4,049
Georgia	Yates	Y6BR	11,885	301	277	0	10,590	11,885	300	277	10,658
Georgia	Yates	Y7BR	11,691	296	272	0	10,416	11,691	295	272	10,484
Illinois	Baldwin	1	20,165	510	469	0	17,967	20,165	509	469	18,083
Illinois	Baldwin	2	21,320	540	498	0	18,995	21,320	538	498	19,119
Illinois	Baldwin	3	20,425	517	475	0	18,199	20,425	516	475	18,315
Illinois	Coffeen	01	5,660	143	132	0	5,043	5,660	143	132	5,078
Illinois	Coffeen	02	17,119	433	399	0	15,253	17,119	432	399	15,352
Illinois	Collins	1	1,516	38	0	0	1,315	1,516	38	0	1,324
Illinois	Collins	2	1,295	33	0	0	1,123	1,295	33	0	1,131
Illinois	Collins	3	2,286	58	0	0	1,983	2,286	58	0	1,996
Illinois	Collins	4	1,866	47	0	0	1,620	1,866	47	0	1,630
Illinois	Collins	5	2,067	52	0	0	1,795	2,067	52	0	1,806
Illinois	Crawford	7	4,126	104	0	3,826	7,206	4,126	104	0	3,604
Illinois	Crawford	8	6,390	162	0	4,257	9,802	6,390	161	0	5,562
Illinois	Dallman	31	1,583	40	0	0	1,373	1,583	40	0	1,383
Illinois	Dallman	32	1,791	45	0	0	1,555	1,791	45	0	1,565
Illinois	Dallman	33	5,941	150	0	0	5,156	5,941	150	0	5,189
Illinois	Duck Creek	1	12,799	324	0	0	11,106	12,799	323	0	11,180
Illinois	E D Edwards	1	2,754	70	0	489	2,879	2,754	70	0	2,405
Illinois	E D Edwards	2	7,711	195	0	168	6,860	7,711	195	0	6,735
Illinois	E D Edwards	3	9,882	250	0	477	9,052	9,882	249	0	8,632
Illinois	Fisk	19	4,109	104	0	6,436	10,002	4,109	104	0	3,569
Illinois	Grand Tower	07	283	7	0	0	246	283	7	0	247
Illinois	Grand Tower	08	269	7	0	0	233	269	7	0	235
Illinois	Grand Tower	09	2,835	72	66	0	2,526	2,835	72	66	2,542

TABLE 2. -- PHASE II ALLOWANCE ALLOCATIONS

State	Plant Name	Boiler [1]	Allowances for years 2000–2009					Allowances for years 2010 and thereafter			
			(A) [2] Unadjusted basic	(B) Special allowance reserve deduction	(C) Additional basic (§405(a)(3))	(D) Total Bonus	(E) [3] Total annual phase II	(F) [2] Unadjusted basic	(G) Special allowance reserve deduction	(H) Additional basic (§ 405(a)(3))	(I) [4] Total annual phase II
Illinois	Havana	1	40	0	0	0	35	40	0	0	35
Illinois	Havana	2	50	0	0	0	45	50	0	0	45
Illinois	Havana	3	40	0	0	0	35	40	0	0	35
Illinois	Havana	4	40	0	0	0	35	40	0	0	35
Illinois	Havana	5	40	0	0	0	35	40	0	0	35
Illinois	Havana	6	40	0	0	0	35	40	0	0	35
Illinois	Havana	7	40	0	0	0	35	40	0	0	35
Illinois	Havana	8	40	0	0	0	35	40	0	0	35
Illinois	Havana	9	7,679	194	0	2,085	8,749	7,679	194	0	6,707
Illinois	Hennepin	1	2,307	58	0	0	2,002	2,307	58	0	2,015
Illinois	Hennepin	2	8,837	224	206	0	7,873	8,837	223	206	7,925
Illinois	Hutsonville	05	2,540	64	0	0	2,204	2,540	64	0	2,219
Illinois	Hutsonville	06	2,631	67	0	0	2,283	2,631	66	0	2,299
Illinois	Joliet 29	71	6,659	169	0	1,752	7,530	6,659	168	0	5,817
Illinois	Joliet 29	72	5,427	137	0	1,428	6,138	5,427	137	0	4,740
Illinois	Joliet 29	81	6,241	158	0	1,634	7,249	6,241	158	0	5,451
Illinois	Joliet 29	82	6,466	164	0	1,900	7,510	6,466	163	0	5,648
Illinois	Joliet 9	5	6,714	170	0	2,800	8,626	6,714	169	0	5,865
Illinois	Joppa Steam	1	6,042	153	0	0	5,243	6,042	153	0	5,277
Illinois	Joppa Steam	2	5,168	131	0	0	4,484	5,168	130	0	4,515
Illinois	Joppa Steam	3	5,888	149	0	0	5,109	5,888	149	0	5,143
Illinois	Joppa Steam	4	5,454	138	0	0	4,732	5,454	138	0	4,764
Illinois	Joppa Steam	5	5,479	139	0	0	4,753	5,479	138	0	4,786
Illinois	Joppa Steam	6	5,096	129	0	0	4,422	5,096	129	0	4,451
Illinois	Kincaid	1	15,134	383	352	0	13,484	15,134	382	352	13,571
Illinois	Kincaid	2	16,676	422	388	0	14,658	16,676	421	388	14,954
Illinois	Lakeside	7	722	18	0	0	627	722	18	0	631
Illinois	Lakeside	8	371	9	0	0	322	371	9	0	324
Illinois	Lakeside	GT2	0	0	0	0	0	0	0	0	0
Illinois	Marion	1	534	14	0	0	462	534	13	0	467
Illinois	Marion	2	547	14	0	0	474	547	14	0	476
Illinois	Marion	3	593	15	0	0	514	593	15	0	516
Illinois	Marion	4	7,817	198	0	0	6,782	7,817	197	0	6,826
Illinois	Meredosia	01	341	9	0	0	295	341	9	0	297
Illinois	Meredosia	02	367	9	0	0	319	367	9	0	321
Illinois	Meredosia	03	320	8	0	0	277	320	8	0	280
Illinois	Meredosia	04	291	7	0	0	253	291	7	0	255
Illinois	Meredosia	05	6,668	169	155	0	5,941	6,668	168	155	5,980
Illinois	Meredosia	06	52	1	0	0	46	52	1	0	46
Illinois	Newton	1	17,654	452	0	0	15,493	17,654	451	0	15,565
Illinois	Newton	2	15,919	403	0	0	13,813	15,919	402	0	13,905
Illinois	Powerton	51	9,631	244	0	2,275	10,632	9,631	243	0	8,412
Illinois	Powerton	52	9,515	241	0	2,247	10,503	9,515	240	0	8,311
Illinois	Powerton	61	9,787	248	0	1,951	10,442	9,787	247	0	8,549
Illinois	Powerton	62	9,864	250	0	1,968	10,525	9,864	249	0	8,616
Illinois	R S Wallace	9	70	2	0	840	901	70	2	0	81
Illinois	R S Wallace	10	202	5	0	2,255	2,430	202	5	0	177

TABLE 2. — — PHASE II ALLOWANCE ALLOCATIONS

State	Plant Name	Boiler [1]	Allowances for years 2000–2009					Allowances for years 2010 and thereafter			
			(A) [2] Unadjusted basic	(B) Special allowance reserve deduction	(C) Additional basic (§405(a)(3))	(D) Total Bonus	(E) [3] Total annual phase II	(F) [2] Unadjusted basic	(G) Special allowance reserve deduction	(H) Additional basic (§ 405(a)(3))	(I) [4] Total annual phase II
Illinois	Venice	1	5	0	0	0	5	5	0	0	5
Illinois	Venice	2	2	0	0	0	2	2	0	0	2
Illinois	Venice	3	19	0	0	0	17	19	0	0	17
Illinois	Venice	4	16	0	0	0	14	16	0	0	14
Illinois	Venice	5	11	0	0	0	10	11	0	0	9
Illinois	Venice	6	10	0	0	0	10	10	0	0	8
Illinois	Venice	7	2	0	0	0	2	2	0	0	2
Illinois	Venice	8	2	0	0	0	2	2	0	0	2
Illinois	Vermilion	1	3,239	82	0	0	2,811	3,239	82	0	2,829
Illinois	Vermilion	2	4,264	108	99	0	3,796	4,264	108	99	3,823
Illinois	Waukegan	7	7,203	182	0	1,911	8,162	7,203	182	0	6,291
Illinois	Waukegan	8	5,710	145	0	2,843	7,797	5,710	144	0	4,966
Illinois	Waukegan	17	1,712	43	0	1,605	3,091	1,712	43	0	1,496
Illinois	Will County	1	2,914	74	0	2,772	5,300	2,914	74	0	2,545
Illinois	Will County	2	2,857	72	0	2,351	4,831	2,857	72	0	2,496
Illinois	Will County	3	5,926	150	0	1,807	6,951	5,926	150	0	5,176
Illinois	Will County	4	10,416	264	0	4,887	13,726	10,416	263	0	9,100
Illinois	Wood River	1	0	0	0	3	3	3	0	0	3
Illinois	Wood River	2	0	0	0	3	3	3	0	0	3
Illinois	Wood River	3	0	0	0	3	3	3	0	0	3
Illinois	Wood River	4	2,009	51	0	501	2,244	2,009	51	0	1,755
Illinois	Wood River	5	10,834	274	0	0	9,401	10,834	274	0	9,463
Indiana	A B Brown	1	6,123	155	0	0	5,313	6,123	155	0	5,348
Indiana	A B Brown	2	5,176	131	0	0	4,491	5,176	131	0	4,521
Indiana	A B Brown	**4	730	18	0	0	634	730	18	0	638
Indiana	Bailly	7	5,355	136	125	0	4,772	5,355	135	125	4,803
Indiana	Bailly	8	7,648	194	178	0	6,814	7,648	193	178	6,856
Indiana	Breed	1	8,878	225	207	0	7,910	8,878	224	207	7,962
Indiana	Cayuga	1	16,016	405	373	0	14,272	16,016	404	373	14,365
Indiana	Cayuga	2	16,380	415	381	0	14,594	16,380	414	381	14,688
Indiana	Clifty Creek	1	9,673	245	0	0	8,394	9,673	244	0	8,449
Indiana	Clifty Creek	2	9,511	241	0	0	8,253	9,511	240	0	8,308
Indiana	Clifty Creek	3	9,797	248	0	0	8,500	9,797	247	0	8,556
Indiana	Clifty Creek	4	9,636	244	0	0	8,363	9,636	243	0	8,419
Indiana	Clifty Creek	5	9,292	235	0	0	8,063	9,292	235	0	8,116
Indiana	Clifty Creek	6	9,761	246	0	0	8,466	9,761	247	0	8,543
Indiana	Dean H Mitchell	4	1,661	43	0	1,645	3,103	1,661	42	0	1,469
Indiana	Dean H Mitchell	5	2,122	54	0	1,161	3,002	2,122	54	0	1,853
Indiana	Dean H Mitchell	6	1,907	48	0	1,301	2,955	1,907	48	0	1,866
Indiana	Dean H Mitchell	11	1,397	35	0	1,435	2,646	1,397	35	0	1,221
Indiana	Edwardsport	6–1	0	0	0	0	0	0	0	0	0
Indiana	Edwardsport	7–1	397	10	0	0	345	397	10	0	347
Indiana	Edwardsport	7–2	404	10	0	0	351	404	10	0	353
Indiana	Edwardsport	8–1	429	11	0	0	372	429	11	0	375
Indiana	Elmer W Stout	1	0	0	0	0	0	0	0	0	0
Indiana	Elmer W Stout	2	0	0	0	0	0	0	0	0	0
Indiana	Elmer W Stout	3	0	0	0	0	0	0	0	0	0

TABLE 2. -- PHASE II ALLOWANCE ALLOCATIONS

State	Plant Name	Boiler [1]	Allowances for years 2000-2009					Allowances for years 2010 and thereafter			
			(A) [2] Unadjusted basic	(B) Special allowance reserve deduction	(C) Additional basic (§405(a)(3))	(D) Total Bonus	(E) [3] Total annual phase II	(F) [2] Unadjusted basic	(G) Special allowance reserve deduction	(H) Additional basic (§ 405(a)(3))	(I) [4] Total annual phase II
Indiana	Elmer W Stout	4	0	0	0	0	0	0	0	0	0
Indiana	Elmer W Stout	5	0	0	0	0	0	0	0	0	0
Indiana	Elmer W Stout	6	0	0	0	0	0	0	0	0	0
Indiana	Elmer W Stout	7	0	0	0	0	0	0	0	0	0
Indiana	Elmer W Stout	8	0	0	0	0	0	0	0	0	0
Indiana	Elmer W Stout	9	1	0	0	0	1	1	0	0	1
Indiana	Elmer W Stout	10	2	0	0	0	2	2	0	0	2
Indiana	Elmer W Stout	50	1,864	47	43	0	1,861	1,864	47	43	1,871
Indiana	Elmer W Stout	60	2,291	58	53	0	2,040	2,291	58	53	2,054
Indiana	Elmer W Stout	70	11,332	287	264	0	10,098	11,332	286	264	10,162
Indiana	F B Culley	1	945	24	0	0	820	945	24	0	825
Indiana	F B Culley	2	1,958	50	46	0	1,744	1,958	49	46	1,757
Indiana	F B Culley	3	8,146	206	190	0	7,259	8,146	206	190	7,305
Indiana	Frank E Ratts	1SG1	4,000	101	93	0	3,565	4,000	101	93	3,587
Indiana	Frank E Ratts	2SG1	4,073	103	95	0	3,629	4,073	103	95	3,652
Indiana	Gibson	1	19,390	491	451	0	17,276	19,390	489	451	17,388
Indiana	Gibson	2	19,663	496	456	0	17,537	19,663	497	456	17,650
Indiana	Gibson	3	19,717	499	459	0	17,568	19,717	496	459	17,661
Indiana	Gibson	4	19,355	490	451	0	17,245	19,355	489	451	17,357
Indiana	Gibson	5	20,781	526	0	0	18,032	20,781	525	0	18,151
Indiana	H T Pritchard	1	0	0	0	0	0	0	0	0	0
Indiana	H T Pritchard	2	1	0	0	0	1	1	0	0	1
Indiana	H T Pritchard	3	274	7	0	0	238	274	7	0	239
Indiana	H T Pritchard	4	609	15	0	0	529	609	15	0	532
Indiana	H T Pritchard	5	681	17	0	0	592	681	17	0	595
Indiana	H T Pritchard	6	2,769	70	64	0	2,467	2,769	70	64	2,483
Indiana	Merom	1SG1	17,055	432	0	0	14,799	17,055	431	0	14,897
Indiana	Merom	2SG1	16,939	429	0	0	14,698	16,939	428	0	14,795
Indiana	Michigan City	4	1,039	26	0	0	902	1,039	26	0	908
Indiana	Michigan City	5	1,154	29	0	0	1,001	1,154	29	0	1,008
Indiana	Michigan City	6	1,165	30	0	0	1,010	1,165	30	0	1,017
Indiana	Michigan City	12	11,189	283	260	0	9,969	11,189	282	260	10,034
Indiana	Na 1 -- 7221	**1	0	0	0	0	0	0	0	0	0
Indiana	Na 1 -- 7221	**2	0	0	0	0	0	0	0	0	0
Indiana	Na 1 -- 7221	**3	0	0	0	0	0	0	0	0	0
Indiana	Na 1 -- 7221	**4	0	0	0	0	0	0	0	0	0
Indiana	Na 1 -- 7226	**4	0	0	0	0	0	0	0	0	0
Indiana	Na 1 -- 7226	**5	0	0	0	0	0	0	0	0	0
Indiana	Noblesville	1	75	2	0	0	66	75	2	0	65
Indiana	Noblesville	2	62	2	0	0	54	62	2	0	53
Indiana	Noblesville	3	46	1	0	0	40	46	1	0	40
Indiana	Petersburg	1	7,889	200	184	0	7,029	7,889	199	184	7,075
Indiana	Petersburg	2	15,544	393	362	0	13,850	15,544	392	362	13,940
Indiana	Petersburg	3	19,296	488	0	0	16,743	19,296	487	0	16,855
Indiana	Petersburg	4	18,460	467	0	0	16,019	18,460	466	0	16,124
Indiana	R Gallagher	1	3,236	82	75	0	2,885	3,236	82	75	2,903
Indiana	R Gallagher	2	3,494	88	81	0	3,113	3,494	88	81	3,133

TABLE 2. -- PHASE II ALLOWANCE ALLOCATIONS

State	Plant Name	Boiler [1]	Allowances for years 2000–2009					Allowances for years 2010 and thereafter			
			(A) [2]	(B)	(C)	(D)	(E) [3]	(F) [2]	(G)	(H)	(I) [4]
			Unadjusted basic	Special allowance reserve deduction	Additional basic (§405(a)(3))	Total Bonus	Total annual phase II	Unadjusted basic	Special allowance reserve deduction	Additional basic (§ 405(a)(3))	Total annual phase II
Indiana	R Gallagher	3	3,134	79	73	0	2,792	3,134	79	73	2,811
Indiana	R Gallagher	4	3,265	83	76	0	2,908	3,265	82	76	2,928
Indiana	R M Schahfer	14	5,553	141	0	5,498	10,316	5,553	140	0	4,851
Indiana	R M Schahfer	15	5,089	129	0	6,239	10,655	5,089	128	0	4,448
Indiana	R M Schahfer	17	5,969	151	0	0	5,160	5,969	151	0	5,213
Indiana	R M Schahfer	18	5,930	150	0	0	5,146	5,930	150	0	5,179
Indiana	Rockport	MB1	37,716	956	0	0	32,722	37,716	953	0	32,944
Indiana	Rockport	MB2	37,716	956	0	0	32,722	37,716	953	0	32,944
Indiana	State Line	3	3,938	100	0	1,260	4,697	3,938	99	0	3,440
Indiana	State Line	4	6,882	174	0	902	6,674	6,882	174	0	6,011
Indiana	Tanners Creek	U1	2,324	59	0	742	2,756	2,324	59	0	2,030
Indiana	Tanners Creek	U2	2,439	62	0	663	2,760	2,439	62	0	2,130
Indiana	Tanners Creek	U3	2,609	66	0	1,797	4,061	2,609	66	0	2,279
Indiana	Tanners Creek	U4	11,915	302	277	0	10,616	11,915	301	277	10,684
Indiana	Wabash River	1	1,918	49	45	0	1,708	1,918	48	45	1,721
Indiana	Wabash River	2	1,549	39	36	0	1,380	1,549	39	36	1,389
Indiana	Wabash River	3	1,799	46	42	0	1,603	1,799	45	42	1,614
Indiana	Wabash River	4	1,750	44	0	0	1,519	1,750	44	0	1,529
Indiana	Wabash River	5	1,761	45	41	0	1,569	1,761	44	41	1,580
Indiana	Wabash River	6	5,894	149	137	0	5,251	5,894	149	137	5,265
Indiana	Warrick	4	11,698	296	272	0	10,422	11,698	295	272	10,490
Indiana	Whitewater Valley	1	2,557	65	0	0	2,218	2,557	65	0	2,233
Indiana	Whitewater Valley	2	7,650	194	0	0	6,638	7,650	193	0	6,682
Iowa	Ames	7	460	12	0	0	400	460	12	0	401
Iowa	Ames	8	2,095	53	0	0	1,818	2,095	53	0	1,830
Iowa	Burlington	1	5,141	130	0	0	4,461	5,141	130	0	4,490
Iowa	Council Bluffs	1	745	19	0	456	1,104	745	19	0	851
Iowa	Council Bluffs	2	1,059	27	0	724	1,643	1,059	27	0	925
Iowa	Council Bluffs	3	18,234	462	0	0	15,822	18,234	460	0	15,927
Iowa	Des Moines	10	187	5	0	0	162	187	5	0	163
Iowa	Des Moines	11	279	7	0	0	242	279	7	0	244
Iowa	Des Moines	**5	0	0	0	0	0	0	0	0	0
Iowa	Dubuque	1	1,279	32	0	0	1,111	1,279	32	0	1,117
Iowa	Dubuque	5	349	9	0	0	302	349	9	0	305
Iowa	Earl F Wisdom	1	433	11	0	0	376	433	11	0	378
Iowa	Fair Station	2	6,370	161	0	0	5,526	6,370	161	0	5,564
Iowa	George Neal	1	2,640	67	0	0	2,291	2,640	67	0	2,306
Iowa	George Neal	2	5,025	127	0	4,685	9,046	5,025	127	0	4,389
Iowa	George Neal	3	9,760	247	0	3,755	12,224	9,760	246	0	8,525
Iowa	George Neal	4	17,305	438	0	0	15,015	17,305	437	0	15,115
Iowa	Graettinger	**5	11	0	0	0	10	11	0	0	10
Iowa	Grinnell	**2	217	6	0	0	188	217	5	0	190
Iowa	Lansing	3	547	14	0	0	474	547	14	0	476
Iowa	Lansing	4	4,956	125	0	292	4,593	4,956	125	0	4,329
Iowa	Lime Creek	**1	291	7	0	0	253	291	7	0	255
Iowa	Lime Creek	**2	291	7	0	0	253	291	7	0	255
Iowa	Louisa	101	17,817	451	0	0	15,460	17,817	450	0	15,562

TABLE 2. -- PHASE II ALLOWANCE ALLOCATIONS

State	Plant Name	Boiler [1]	Allowances for years 2000–2009					Allowances for years 2010 and thereafter			
			(A) [2] Unadjusted basic	(B) Special allowance reserve deduction	(C) Additional basic (§405(a)(3))	(D) Total Bonus	(E) [3] Total annual phase II	(F) [2] Unadjusted basic	(G) Special allowance reserve deduction	(H) Additional basic (§ 405(a)(3))	(I) [4] Total annual phase II
Iowa	Maynard Station	1	35	1	0	0	31	35	1	0	30
Iowa	Milton L Kapp	2	6,622	168	0	0	5,745	6,622	167	0	5,784
Iowa	Muscatine	8	1,556	39	0	0	1,350	1,556	39	0	1,359
Iowa	Muscatine	9	2,316	59	0	0	2,009	2,316	58	0	2,023
Iowa	Na 1 -- 7230	**2	0	0	0	0	0	0	0	0	0
Iowa	Ottumwa	1	21,819	552	0	0	18,934	21,819	551	0	19,058
Iowa	Pella	6	865	22	0	0	750	865	22	0	756
Iowa	Pella	7	1,116	28	0	0	969	1,116	28	0	975
Iowa	Pella	8	31	1	0	41	68	31	1	0	26
Iowa	Prairie Creek	3	829	21	0	0	719	829	21	0	724
Iowa	Prairie Creek	4	3,924	99	0	0	3,405	3,924	99	0	3,426
Iowa	Riverside	9	1,994	50	0	0	1,731	1,994	50	0	1,742
Iowa	Sixth Street	1	930	24	0	0	807	930	24	0	811
Iowa	Sixth Street	2	201	6	0	0	177	201	6	0	175
Iowa	Sixth Street	3	177	6	0	0	154	177	6	0	154
Iowa	Sixth Street	4	85	1	0	0	77	85	1	0	74
Iowa	Sixth Street	5	352	10	0	0	307	352	10	0	306
Iowa	Streeter Station	7	633	16	0	0	549	633	16	0	553
Iowa	Sutherland	1	228	6	0	0	197	228	6	0	199
Iowa	Sutherland	2	429	11	0	0	373	429	11	0	375
Iowa	Sutherland	3	2,505	63	0	0	2,173	2,505	63	0	2,188
Kansas	Arthur Mullergren	3	0	0	0	1	1	1	0	0	1
Kansas	Cimarron River	1	0	0	0	12	12	12	0	0	11
Kansas	Coffeyville	4	1	0	0	10	11	11	0	0	10
Kansas	East 12Th St	4	1	0	0	9	10	9	0	0	8
Kansas	Garden City	S-2	0	0	0	0	0	0	0	0	0
Kansas	Gordon Evans	1	1	0	0	63	64	64	2	0	56
Kansas	Gordon Evans	2	1	0	0	24	25	24	1	0	21
Kansas	Holcomb	SGU1	4,563	116	0	0	3,977	4,563	116	0	4,003
Kansas	Hutchinson	1	0	0	0	0	0	0	0	0	0
Kansas	Hutchinson	2	0	0	0	0	0	0	0	0	0
Kansas	Hutchinson	3	0	0	0	0	0	0	0	0	0
Kansas	Hutchinson	4	0	0	0	18	18	18	0	0	16
Kansas	Jeffrey Energy Centr	1	19,555	495	0	0	16,969	19,555	494	0	17,080
Kansas	Jeffrey Energy Centr	2	20,668	523	0	0	17,934	20,668	522	0	18,053
Kansas	Jeffrey Energy Centr	3	23,560	597	0	0	20,460	23,560	595	0	20,597
Kansas	Judson Large	4	1	0	0	38	39	39	1	0	34
Kansas	Kaw	1	900	23	0	0	780	900	23	0	786
Kansas	Kaw	2	707	18	0	0	613	707	18	0	617
Kansas	Kaw	3	590	15	0	0	512	590	15	0	515
Kansas	Kingman	**9	58	1	0	0	51	58	1	0	51
Kansas	La Cygne	1	16,432	416	0	3,566	17,624	16,432	415	0	14,353
Kansas	La Cygne	2	17,210	436	0	0	14,933	17,210	434	0	15,033
Kansas	Lawrence	2	2	0	0	0	2	2	0	0	2
Kansas	Lawrence	3	713	18	0	1,524	2,143	713	18	0	623
Kansas	Lawrence	4	1,061	27	0	872	1,811	1,061	27	0	945
Kansas	Lawrence	5	4,279	108	0	1,633	5,346	4,279	108	0	3,738

TABLE 2. -- PHASE II ALLOWANCE ALLOCATIONS

State	Plant Name	Boiler [1]	Allowances for years 2000–2009					Allowances for years 2010 and thereafter			
			(A) [2]	(B)	(C)	(D)	(E) [3]	(F) [2]	(G)	(H)	(I) [4]
			Unadjusted basic	Special allowance reserve deduction	Additional basic (§405(a)(3))	Total Bonus	Total annual phase II	Unadjusted basic	Special allowance reserve deduction	Additional basic (§ 405(a)(3))	Total annual phase II
Kansas	Mcpherson 2	1	1	0	0	0	1	1	0	0	1
Kansas	Mulvane	**7	6	0	0	0	5	6	0	0	5
Kansas	Mulvane	**8	6	0	0	0	5	6	0	0	5
Kansas	Murray Gill	1	0	0	0	1	1	1	0	0	1
Kansas	Murray Gill	2	0	0	0	5	5	5	0	0	4
Kansas	Murray Gill	3	1	0	0	49	50	50	1	0	44
Kansas	Murray Gill	4	1	0	0	61	62	62	2	0	54
Kansas	Nearman Creek	N1	7,919	200	0	0	6,872	7,919	200	0	6,917
Kansas	Neosho	7	14	0	0	0	13	14	0	0	13
Kansas	Quindaro	1	2,322	59	0	0	2,014	2,322	59	0	2,026
Kansas	Quindaro	2	2,375	60	0	0	2,061	2,375	60	0	2,074
Kansas	Ripley	**2	0	0	0	0	0	0	0	0	0
Kansas	Ripley	**3	0	0	0	0	0	0	0	0	0
Kansas	Riverton	39	1,187	30	0	0	1,030	1,187	30	0	1,037
Kansas	Riverton	40	2,015	51	0	0	1,749	2,015	51	0	1,760
Kansas	Russell	**11	35	1	0	0	31	35	1	0	30
Kansas	Russell	**12	34	1	0	0	30	34	1	0	30
Kansas	Tecumseh	9	1,051	27	0	1,336	2,248	1,051	27	0	918
Kansas	Tecumseh	10	1,677	42	0	2,449	3,905	1,677	42	0	1,465
Kentucky	Big Sandy	BSU1	7,347	186	0	0	6,376	7,347	185	0	6,418
Kentucky	Big Sandy	BSU2	21,199	537	0	1,167	19,562	21,199	535	0	18,517
Kentucky	Cane Run	3	44	1	0	0	39	44	1	0	39
Kentucky	Cane Run	4	3,110	79	0	1,800	4,499	3,110	79	0	2,716
Kentucky	Cane Run	5	4,939	125	0	18	4,304	4,939	125	0	4,314
Kentucky	Cane Run	6	6,201	157	0	73	5,454	6,201	157	0	5,416
Kentucky	Cane Run	**12	0	0	0	0	0	0	0	0	0
Kentucky	Cane Run	**13	0	0	0	0	0	0	0	0	0
Kentucky	Coleman	C1	5,402	137	126	0	4,814	5,402	136	126	4,845
Kentucky	Coleman	C2	6,162	156	143	0	5,490	6,162	156	143	5,525
Kentucky	Coleman	C3	5,925	150	138	0	5,279	5,925	150	138	5,313
Kentucky	Cooper	1	3,574	90	83	0	3,185	3,574	90	83	3,205
Kentucky	Cooper	2	7,355	186	171	0	6,554	7,355	186	171	6,595
Kentucky	D B Wilson	W1	14,244	361	0	0	12,360	14,244	360	0	12,441
Kentucky	Dale	3	1,931	49	0	294	1,969	1,931	49	0	1,886
Kentucky	Dale	4	1,596	40	0	451	1,836	1,596	40	0	1,394
Kentucky	E W Brown	1	3,413	86	79	0	3,042	3,413	86	79	3,060
Kentucky	E W Brown	2	6,465	164	150	0	5,759	6,465	163	150	5,797
Kentucky	E W Brown	3	12,526	317	292	0	11,162	12,526	316	292	11,233
Kentucky	East Bend	2	20,936	530	0	0	18,166	20,936	529	0	18,286
Kentucky	Elmer Smith	1	3,122	79	73	0	2,782	3,122	79	73	2,800
Kentucky	Elmer Smith	2	6,916	175	161	0	6,162	6,916	175	161	6,201
Kentucky	Ghent	1	13,638	345	317	0	12,152	13,638	344	317	12,230
Kentucky	Ghent	2	11,450	290	0	2,717	12,652	11,450	289	0	10,001
Kentucky	Ghent	3	15,953	404	0	0	13,843	15,953	403	0	13,934
Kentucky	Ghent	4	15,675	397	0	0	13,601	15,675	396	0	13,691
Kentucky	Green River	1	2	0	0	128	130	2	0	0	2
Kentucky	Green River	2	17	0	0	835	851	17	0	0	15

TABLE 2. -- PHASE II ALLOWANCE ALLOCATIONS

State	Plant Name	Boiler [1]	Allowances for years 2000–2009					Allowances for years 2010 and thereafter			
			(A) [2] Unadjusted basic	(B) Special allowance reserve deduction	(C) Additional basic (§405(a)(3))	(D) Total Bonus	(E) [3] Total annual phase II	(F) [2] Unadjusted basic	(G) Special allowance reserve deduction	(H) Additional basic (§ 405(a)(3))	(I) [4] Total annual phase II
Kentucky	Green River	3	14	0	0	731	744	14	0	0	13
Kentucky	Green River	4	3,229	62	0	0	2,802	3,229	62	0	2,820
Kentucky	Green River	5	3,753	95	87	0	3,344	3,753	95	87	3,365
Kentucky	H L Spurlock	1	10,935	277	255	0	9,744	10,935	276	255	9,806
Kentucky	H L Spurlock	2	18,959	460	0	0	16,451	18,959	479	0	16,560
Kentucky	Henderson I	6	926	23	0	0	803	926	23	0	809
Kentucky	Hmp&L Station 2	H1	6,410	162	149	0	5,712	6,410	162	149	5,748
Kentucky	Hmp&L Station 2	H2	6,607	167	154	0	5,888	6,607	167	154	5,925
Kentucky	J K Smith	1	0	0	0	0	0	0	0	0	0
Kentucky	Mill Creek	1	8,778	222	0	401	8,016	8,778	222	0	7,867
Kentucky	Mill Creek	2	8,960	227	0	300	8,075	8,960	226	0	7,826
Kentucky	Mill Creek	3	12,549	318	0	0	10,888	12,549	317	0	10,981
Kentucky	Mill Creek	4	15,565	394	0	0	13,506	15,565	393	0	13,596
Kentucky	Na 1 -- 7220	**3	0	0	0	0	0	0	0	0	0
Kentucky	Na 1 -- 7220	**4	0	0	0	0	0	0	0	0	0
Kentucky	Na 1 -- 7220	**5	0	0	0	0	0	0	0	0	0
Kentucky	Paradise	1	12,366	313	0	0	10,729	12,366	312	0	10,801
Kentucky	Paradise	2	14,060	356	0	0	12,200	14,060	355	0	12,281
Kentucky	Paradise	3	28,401	720	661	0	25,302	28,401	717	661	25,468
Kentucky	Pineville	3	483	12	0	491	911	483	12	0	422
Kentucky	R D Green	G1	6,049	153	0	0	5,249	6,049	153	0	5,263
Kentucky	R D Green	G2	7,288	184	0	0	6,324	7,288	184	0	6,366
Kentucky	Robert Reid	R1	1,076	27	0	0	935	1,076	27	0	940
Kentucky	Shawnee	1	2,991	76	0	1,026	3,621	2,991	76	0	2,612
Kentucky	Shawnee	2	3,082	78	0	975	3,649	3,082	78	0	2,692
Kentucky	Shawnee	3	3,471	88	0	671	3,682	3,471	88	0	3,031
Kentucky	Shawnee	4	3,450	87	0	576	3,571	3,450	87	0	3,014
Kentucky	Shawnee	5	3,369	85	0	678	3,602	3,369	85	0	2,943
Kentucky	Shawnee	6	3,699	94	0	475	3,684	3,699	93	0	3,231
Kentucky	Shawnee	7	4,065	103	0	65	3,610	4,065	103	0	3,568
Kentucky	Shawnee	8	3,909	99	0	150	3,542	3,909	99	0	3,414
Kentucky	Shawnee	9	4,169	106	0	0	3,635	4,169	106	0	3,659
Kentucky	Shawnee	10	5,448	138	127	0	4,653	5,448	138	127	4,665
Kentucky	Trimble County	1	11,009	279	0	0	9,553	11,009	278	0	9,616
Kentucky	Tyrone	1	0	0	0	0	0	0	0	0	0
Kentucky	Tyrone	2	0	0	0	0	0	0	0	0	0
Kentucky	Tyrone	3	0	0	0	0	0	0	0	0	0
Kentucky	Tyrone	4	0	0	0	0	0	0	0	0	0
Kentucky	Tyrone	5	771	20	0	1,036	1,707	771	19	0	674
Louisiana	A B Paterson	3	0	0	0	7	7	4	0	0	4
Louisiana	A B Paterson	4	0	0	0	8	8	7	0	0	6
Louisiana	Arsenal Hill	5A	0	0	0	30	30	21	1	0	18
Louisiana	Big Cajun 1	1B1	8	0	0	20	27	42	1	0	37
Louisiana	Big Cajun 1	1B2	8	0	0	20	27	39	1	0	34
Louisiana	Big Cajun 2	2B1	16,337	414	0	571	14,746	16,337	412	0	14,270
Louisiana	Big Cajun 2	2B2	16,132	408	0	522	14,520	16,132	407	0	14,091
Louisiana	Big Cajun 2	2B3	16,091	407	0	575	14,538	16,091	406	0	14,055

TABLE 2. — — PHASE II ALLOWANCE ALLOCATIONS

State	Plant Name	Boiler [1]	Allowances for years 2000–2009					Allowances for years 2010 and thereafter			
			(A) [2] Unadjusted basic	(B) Special allowance reserve deduction	(C) Additional basic (§405(a)(3))	(D) Total Bonus	(E) [3] Total annual phase II	(F) [2] Unadjusted basic	(G) Special allowance reserve deduction	(H) Additional basic (§ 405(a)(3))	(I) [4] Total annual phase II
Louisiana	Coughlin	6	0	0	0	46	46	39	1	0	34
Louisiana	Coughlin	7	2	0	0	126	126	150	4	0	139
Louisiana	D G Hunter	3	0	0	0	0	0	10	0	0	9
Louisiana	D G Hunter	4	1	0	0	31	32	28	1	0	24
Louisiana	Doc Bonin	1	4	0	0	8	12	19	0	0	17
Louisiana	Doc Bonin	2	1	0	0	23	24	34	1	0	30
Louisiana	Doc Bonin	3	1	0	0	44	45	102	3	0	89
Louisiana	Dolet Hills	1	23,424	593	0	3	20,327	23,424	591	0	20,460
Louisiana	Houma	15	1	0	0	9	10	16	0	0	14
Louisiana	Houma	16	0	0	0	14	14	32	1	0	28
Louisiana	Lieberman	3	2	0	0	84	86	96	2	0	84
Louisiana	Lieberman	4	1	0	0	71	72	72	2	0	63
Louisiana	Little Gypsy	1	47	1	0	203	244	254	6	0	222
Louisiana	Little Gypsy	2	77	2	0	310	377	400	10	0	349
Louisiana	Little Gypsy	3	102	3	0	454	542	540	14	0	471
Louisiana	Louisiana 1	1A	2	0	0	114	116	19	0	0	17
Louisiana	Louisiana 1	2A	2	0	0	0	2	19	0	0	17
Louisiana	Louisiana 1	3A	2	0	0	0	2	19	0	0	17
Louisiana	Louisiana 2	10	0	0	0	0	0	0	0	0	0
Louisiana	Louisiana 2	11	0	0	0	0	0	0	0	0	0
Louisiana	Louisiana 2	12	0	0	0	0	0	0	0	0	0
Louisiana	Michoud	1	2	0	0	69	71	94	2	0	82
Louisiana	Michoud	2	2	0	0	104	106	157	4	0	137
Louisiana	Michoud	3	52	1	0	445	491	532	13	0	465
Louisiana	Monroe	11	2	0	0	11	13	13	0	0	12
Louisiana	Monroe	12	7	0	0	39	45	43	1	0	38
Louisiana	Morgan City	4	1	0	0	4	5	8	0	0	5
Louisiana	Natchitoches	10	0	0	0	0	0	0	0	0	0
Louisiana	Ninemile Point	1	25	1	0	39	61	74	2	0	65
Louisiana	Ninemile Point	2	30	1	0	86	112	118	3	0	103
Louisiana	Ninemile Point	3	27	1	0	73	96	99	3	0	86
Louisiana	Ninemile Point	4	134	3	0	573	690	697	18	0	608
Louisiana	Ninemile Point	5	173	4	0	776	928	925	23	0	808
Louisiana	Opelousas	10	1	0	0	0	1	1	0	0	1
Louisiana	R S Nelson	1	2	0	0	28	30	39	1	0	34
Louisiana	R S Nelson	2	1	0	0	32	33	37	1	0	32
Louisiana	R S Nelson	3	1	0	0	38	39	30	1	0	26
Louisiana	R S Nelson	4	5	0	0	118	123	318	8	0	278
Louisiana	R S Nelson	6	21,332	540	0	900	19,410	21,332	539	0	18,632
Louisiana	Rodemacher	1	3,394	86	0	277	3,222	3,394	86	0	2,964
Louisiana	Rodemacher	2	18,462	467	0	726	18,749	18,462	466	0	18,126
Louisiana	Ruston	2	1	0	0	3	4	7	0	0	6
Louisiana	Ruston	3	0	0	0	5	5	26	1	0	22
Louisiana	Sterlington	10	43	1	0	136	174	178	4	0	156
Louisiana	Sterlington	7AB	15	0	0	58	72	82	2	0	72
Louisiana	Teche	2	0	0	0	27	27	25	1	0	21
Louisiana	Teche	3	5	0	0	441	446	420	11	0	368

TABLE 2. -- PHASE II ALLOWANCE ALLOCATIONS

State	Plant Name	Boiler [1]	Allowances for years 2000–2009					Allowances for years 2010 and thereafter			
			(A) [2] Unadjusted basic	(B) Special allowance reserve deduction	(C) Additional basic (§405(a)(3))	(D) Total Bonus	(E) [3] Total annual phase II	(F) [2] Unadjusted basic	(G) Special allowance reserve deduction	(H) Additional basic (§ 405(a)(3))	(I) [4] Total annual phase II
Louisiana	Waterford 1 & 2	1	4,869	123	0	293	4,518	4,869	123	0	4,253
Louisiana	Waterford 1 & 2	2	3,780	96	0	226	3,506	3,780	95	0	3,302
Louisiana	Willow Glen	1	2	0	0	97	99	100	3	0	87
Louisiana	Willow Glen	2	0	0	0	25	25	23	1	0	20
Louisiana	Willow Glen	3	0	0	0	93	93	37	1	0	32
Louisiana	Willow Glen	4	4	0	0	286	290	337	9	0	294
Louisiana	Willow Glen	5	26	1	0	436	456	499	13	0	435
Maine	Graham Station	5	393	10	0	0	341	393	10	0	343
Maine	Mason Steam	3	2	0	0	0	2	2	0	0	2
Maine	Mason Steam	4	1	0	0	0	1	1	0	0	1
Maine	Mason Steam	5	1	0	0	0	1	1	0	0	1
Maine	William F Wyman	1	532	13	0	694	1,155	532	13	0	465
Maine	William F Wyman	2	626	16	0	613	1,156	626	16	0	547
Maine	William F Wyman	3	3,072	78	0	257	2,922	3,072	78	0	2,683
Maine	William F Wyman	4	7,169	181	0	0	6,221	7,169	181	0	6,262
Maryland	Brandon Shores	1	21,151	535	0	0	18,354	21,151	534	0	18,475
Maryland	Brandon Shores	2	8,907	225	0	0	7,729	8,907	225	0	7,780
Maryland	C P Crane	1	4,969	126	0	0	4,312	4,969	125	0	4,341
Maryland	C P Crane	2	4,619	117	0	0	4,008	4,619	117	0	4,034
Maryland	Chalk Point	1	10,515	266	0	0	9,124	10,515	265	0	9,185
Maryland	Chalk Point	2	11,677	296	0	0	10,132	11,677	295	0	10,199
Maryland	Chalk Point	3	5,965	151	0	7,282	12,456	5,965	151	0	5,210
Maryland	Chalk Point	4	2,971	75	0	0	2,578	2,971	75	0	2,595
Maryland	Chalk Point	**GT3	808	20	0	0	702	808	20	0	706
Maryland	Chalk Point	**GT4	808	20	0	0	702	808	20	0	706
Maryland	Chalk Point	**GT5	1,022	26	0	0	887	1,022	26	0	892
Maryland	Chalk Point	**GT6	1,022	26	0	0	887	1,022	26	0	892
Maryland	Coal Gas Cc 1	**CT1	1,236	31	0	0	1,073	1,236	31	0	1,080
Maryland	Coal Gas Cc 1	**CW1	0	0	0	0	0	0	0	0	0
Maryland	Coal Gas Cc 2	**CT3	0	0	0	0	0	0	0	0	0
Maryland	Coal Gas Cc 2	**CT4	0	0	0	0	0	0	0	0	0
Maryland	Dickerson	1	6,683	169	0	0	5,799	6,683	169	0	5,837
Maryland	Dickerson	2	6,285	159	0	0	5,454	6,285	159	0	5,489
Maryland	Dickerson	3	6,680	169	0	0	5,797	6,680	169	0	5,834
Maryland	Easton 2	**26	0	0	0	0	0	0	0	0	0
Maryland	Easton 2	**27	0	0	0	0	0	0	0	0	0
Maryland	Gould Street	3	939	24	0	0	814	939	24	0	820
Maryland	Herbert A Wagner	1	1,474	37	0	0	1,280	1,474	37	0	1,288
Maryland	Herbert A Wagner	2	1,485	38	0	0	1,287	1,485	38	0	1,297
Maryland	Herbert A Wagner	3	9,577	242	0	0	8,311	9,577	242	0	8,365
Maryland	Herbert A Wagner	4	1,737	44	0	0	1,507	1,737	44	0	1,517
Maryland	Morgantown	1	19,348	490	0	0	16,788	19,348	488	0	16,900
Maryland	Morgantown	2	18,498	468	0	0	16,051	18,498	467	0	16,157
Maryland	Nanticoke	**ST1	0	0	0	0	0	0	0	0	0
Maryland	Perryman	**52	0	0	0	0	0	0	0	0	0
Maryland	Perryman	**61	0	0	0	0	0	0	0	0	0
Maryland	Perryman	**62	0	0	0	0	0	0	0	0	0

TABLE 2. -- PHASE II ALLOWANCE ALLOCATIONS

State	Plant Name	Boiler [1]	Allowances for years 2000–2009					Allowances for years 2010 and thereafter			
			(A) [2] Unadjusted basic	(B) Special allowance reserve deduction	(C) Additional basic (§405(a)(3))	(D) Total Bonus	(E) [3] Total annual phase II	(F) [2] Unadjusted basic	(G) Special allowance reserve deduction	(H) Additional basic (§ 405(a)(3))	(I) [4] Total annual phase II
Maryland	R P Smith	9	386	10	0	0	335	386	10	0	337
Maryland	R P Smith	11	2,592	66	0	46	2,295	2,592	65	0	2,264
Maryland	Riverside	1	216	5	0	0	188	216	5	0	189
Maryland	Riverside	2	196	5	0	0	170	196	5	0	171
Maryland	Riverside	3	404	10	0	0	351	404	10	0	353
Maryland	Riverside	4	520	13	0	0	451	520	13	0	454
Maryland	Riverside	5	337	9	0	0	292	337	9	0	294
Maryland	Vienna	6	2,075	53	0	1,829	3,629	2,075	52	0	1,813
Maryland	Westport	3	213	5	0	0	185	213	5	0	186
Maryland	Westport	4	295	7	0	0	257	295	7	0	258
Massachusetts	Brayton Point	1	9,692	245	0	0	8,411	9,692	245	0	8,465
Massachusetts	Brayton Point	2	10,182	258	0	0	8,834	10,182	257	0	8,894
Massachusetts	Brayton Point	3	21,283	539	0	0	18,467	21,283	537	0	18,590
Massachusetts	Brayton Point	4	13,256	336	0	538	12,040	13,256	335	0	11,576
Massachusetts	Canal	1	14,061	356	0	930	13,131	14,061	355	0	12,262
Massachusetts	Canal	2	20,568	521	0	0	17,847	20,568	519	0	17,966
Massachusetts	Cannon Street	3	427	11	0	0	371	427	11	0	373
Massachusetts	Cleary Flood	8	163	4	0	0	142	163	4	0	142
Massachusetts	Cleary Flood	9	1,799	46	0	1,105	2,666	1,799	45	0	1,572
Massachusetts	Kendall Square	1	225	5	0	0	196	225	5	0	197
Massachusetts	Kendall Square	2	237	5	0	0	206	237	5	0	208
Massachusetts	Kendall Square	3	461	12	0	0	416	461	12	0	420
Massachusetts	Mount Tom	1	6,412	162	0	0	5,565	6,412	162	0	5,601
Massachusetts	Mystic	4	2,979	75	0	0	2,585	2,979	75	0	2,602
Massachusetts	Mystic	5	3,534	89	0	0	3,067	3,534	89	0	3,087
Massachusetts	Mystic	6	3,515	89	0	0	3,049	3,515	89	0	3,070
Massachusetts	Mystic	7	19,704	499	0	0	17,097	19,704	497	0	17,211
Massachusetts	New Boston	1	7,037	178	0	0	6,106	7,037	178	0	6,146
Massachusetts	New Boston	2	7,226	183	0	0	6,270	7,226	182	0	6,312
Massachusetts	Salem Harbor	1	3,816	97	0	0	3,311	3,816	96	0	3,333
Massachusetts	Salem Harbor	2	3,895	99	0	0	3,379	3,895	98	0	3,402
Massachusetts	Salem Harbor	3	6,240	158	0	0	5,414	6,240	158	0	5,450
Massachusetts	Salem Harbor	4	14,083	356	0	246	12,467	14,083	356	0	12,301
Massachusetts	Somerset	1	0	0	0	0	0	0	0	0	0
Massachusetts	Somerset	2	0	0	0	0	0	0	0	0	0
Massachusetts	Somerset	3	0	0	0	0	0	0	0	0	0
Massachusetts	Somerset	4	0	0	0	0	0	0	0	0	0
Massachusetts	Somerset	5	0	0	0	0	0	0	0	0	0
Massachusetts	Somerset	6	0	0	0	0	0	0	0	0	0
Massachusetts	Somerset	7	3,160	80	0	0	2,742	3,160	80	0	2,760
Massachusetts	Somerset	8	4,554	115	0	0	3,952	4,554	115	0	3,978
Massachusetts	Waters River	**2	282	7	0	0	245	282	7	0	246
Massachusetts	West Springfield	1	432	11	0	0	375	432	11	0	377
Massachusetts	West Springfield	2	406	10	0	0	353	406	10	0	355
Massachusetts	West Springfield	3	3,441	87	0	0	2,987	3,441	87	0	3,005
Michigan	B C Cobb	1	504	13	0	701	1,136	504	13	0	440
Michigan	B C Cobb	2	542	13	0	755	1,225	542	13	0	474

TABLE 2. -- PHASE II ALLOWANCE ALLOCATIONS

State	Plant Name	Boiler [1]	Allowances for years 2000–2009					Allowances for years 2010 and thereafter			
			(A) [2] Unadjusted basic	(B) Special allowance reserve deduction	(C) Additional basic (§405(a)(3))	(D) Total Bonus	(E) [3] Total annual phase II	(F) [2] Unadjusted basic	(G) Special allowance reserve deduction	(H) Additional basic (§ 405(a)(3))	(I) [4] Total annual phase II
Michigan	B C Cobb	3	539	13	0	752	1,218	539	13	0	472
Michigan	B C Cobb	4	5,226	132	0	0	4,535	5,226	132	0	4,565
Michigan	B C Cobb	5	5,364	136	0	0	4,655	5,364	135	0	4,686
Michigan	Belle River	1	21,145	535	0	0	18,348	21,145	534	0	18,469
Michigan	Belle River	2	21,446	543	0	0	18,609	21,446	541	0	18,733
Michigan	Conners Creek	15	672	17	0	3,696	4,261	672	17	0	567
Michigan	Conners Creek	16	662	17	0	3,700	4,275	662	17	0	576
Michigan	Conners Creek	17	631	15	0	3,452	4,031	631	15	0	552
Michigan	Conners Creek	18	512	13	0	2,905	3,348	512	13	0	447
Michigan	Dan E Karn	1	8,926	226	0	0	7,745	8,926	225	0	7,797
Michigan	Dan E Karn	2	9,789	246	0	0	8,493	9,789	247	0	8,550
Michigan	Dan E Karn	3	1,167	30	0	0	1,012	1,167	29	0	1,020
Michigan	Dan E Karn	4	1,062	27	0	0	940	1,062	27	0	945
Michigan	Delray	7	0	0	0	0	0	0	0	0	0
Michigan	Delray	8	0	0	0	12	12	14	0	0	12
Michigan	Delray	9	0	0	0	0	0	0	0	0	0
Michigan	Delray	10	0	0	0	14	14	16	0	0	14
Michigan	Delray	11	0	0	0	0	0	0	0	0	0
Michigan	Delray	12	0	0	0	14	14	14	0	0	12
Michigan	Eckert Station	1	1,341	34	0	124	1,287	1,341	34	0	1,171
Michigan	Eckert Station	2	1,397	35	0	131	1,344	1,397	35	0	1,221
Michigan	Eckert Station	3	1,273	32	0	213	1,318	1,273	32	0	1,112
Michigan	Eckert Station	4	2,540	64	0	0	2,204	2,540	64	0	2,219
Michigan	Eckert Station	5	3,046	77	0	0	2,644	3,046	77	0	2,660
Michigan	Eckert Station	6	2,677	68	0	0	2,322	2,677	68	0	2,336
Michigan	Endicott Generating	1	2,069	52	0	0	1,796	2,069	52	0	1,807
Michigan	Erickson	1	7,595	192	0	0	6,591	7,595	192	0	6,634
Michigan	Greenwood	1	617	16	0	0	535	617	16	0	539
Michigan	Harbor Beach	1	1,627	41	0	2,096	3,508	1,627	41	0	1,421
Michigan	J B Sims	3	1,696	43	0	0	1,471	1,696	43	0	1,481
Michigan	J C Weadock	7	5,423	137	0	0	4,707	5,423	137	0	4,737
Michigan	J C Weadock	8	5,360	136	0	0	4,651	5,360	135	0	4,682
Michigan	J H Campbell	1	9,254	234	0	0	8,030	9,254	234	0	8,083
Michigan	J H Campbell	2	11,067	280	0	0	9,603	11,067	279	0	9,667
Michigan	J H Campbell	3	31,405	796	0	0	27,247	31,405	794	0	27,431
Michigan	J R Whiting	1	3,899	99	0	0	3,383	3,899	98	0	3,408
Michigan	J R Whiting	2	3,992	101	0	0	3,464	3,992	101	0	3,487
Michigan	J R Whiting	3	5,107	129	0	0	4,431	5,107	129	0	4,461
Michigan	James De Young	5	1,197	30	0	0	1,039	1,197	30	0	1,046
Michigan	Marysville	9	640	16	0	1,076	1,831	640	16	0	560
Michigan	Marysville	10	493	13	0	831	1,256	493	13	0	430
Michigan	Marysville	11	514	13	0	866	1,311	514	13	0	449
Michigan	Marysville	12	414	11	0	696	1,058	414	11	0	360
Michigan	Mistersky	5	293	7	0	0	255	293	7	0	256
Michigan	Mistersky	6	500	13	0	0	433	500	13	0	436
Michigan	Mistersky	7	555	14	0	0	481	555	14	0	485
Michigan	Monroe	1	27,243	690	0	0	23,636	27,243	688	0	23,796

TABLE 2. -- PHASE II ALLOWANCE ALLOCATIONS

State	Plant Name	Boiler [1]	Allowances for years 2000–2009					Allowances for years 2010 and thereafter			
			(A) [2] Unadjusted basic	(B) Special allowance reserve deduction	(C) Additional basic (§405(a)(3))	(D) Total Bonus	(E) [3] Total annual phase II	(F) [2] Unadjusted basic	(G) Special allowance reserve deduction	(H) Additional basic (§ 405(a)(3))	(I) [4] Total annual phase II
Michigan	Monroe	2	26,273	716	0	0	24,531	26,273	714	0	24,695
Michigan	Monroe	3	26,466	670	0	0	22,963	26,466	668	0	23,117
Michigan	Monroe	4	29,065	737	0	0	25,216	29,065	735	0	25,366
Michigan	Presque Isle	2	280	7	0	392	635	280	7	0	245
Michigan	Presque Isle	3	2,179	55	0	0	1,691	2,179	55	0	1,903
Michigan	Presque Isle	4	1,908	48	0	7	1,662	1,908	48	0	1,667
Michigan	Presque Isle	5	3,352	85	0	0	2,909	3,352	85	0	2,927
Michigan	Presque Isle	6	3,360	85	0	0	2,916	3,360	85	0	2,935
Michigan	Presque Isle	7	2,479	63	0	47	2,197	2,479	63	0	2,165
Michigan	Presque Isle	8	2,338	59	0	145	2,174	2,338	59	0	2,042
Michigan	Presque Isle	9	1,724	44	0	637	2,333	1,724	44	0	1,505
Michigan	River Rouge	1	90	2	0	0	79	90	2	0	79
Michigan	River Rouge	2	7,075	179	0	132	6,271	7,075	179	0	6,179
Michigan	River Rouge	3	10,402	263	0	0	9,026	10,402	263	0	9,065
Michigan	Shiras	3	572	14	0	0	498	572	14	0	500
Michigan	St Clair	1	4,189	106	0	0	3,635	4,189	106	0	3,659
Michigan	St Clair	2	4,049	103	0	0	3,513	4,049	102	0	3,537
Michigan	St Clair	3	4,027	102	0	0	3,495	4,027	102	0	3,517
Michigan	St Clair	4	3,880	98	0	0	3,366	3,880	98	0	3,389
Michigan	St Clair	5	0	0	0	0	0	0	0	0	0
Michigan	St Clair	6	8,390	212	0	0	7,281	8,390	212	0	7,328
Michigan	St Clair	7	15,379	389	0	0	13,344	15,379	388	0	13,433
Michigan	Trenton Channel	16	2,619	66	0	1,000	3,272	2,619	66	0	2,288
Michigan	Trenton Channel	17	610	16	0	233	761	610	16	0	532
Michigan	Trenton Channel	18	2,835	72	0	1,082	3,543	2,835	71	0	2,477
Michigan	Trenton Channel	19	556	14	0	212	696	556	14	0	486
Michigan	Trenton Channel	9A	16,577	420	0	0	14,384	16,577	418	0	14,480
Michigan	Wyandotte	5	625	15	0	412	955	625	15	0	546
Michigan	Wyandotte	7	621	15	0	409	949	621	15	0	543
Michigan	491 E. 48Th Street	**7	341	9	0	0	295	341	9	0	297
Michigan	491 E. 48Th Street	**8	341	9	0	0	295	341	9	0	297
Minnesota	Allen S King	1	17,857	452	0	0	15,495	17,857	451	0	15,597
Minnesota	Black Dog	1	378	10	0	1,583	1,911	378	10	0	330
Minnesota	Black Dog	2	522	13	0	3,226	3,676	522	13	0	456
Minnesota	Black Dog	3	1,129	29	0	1,287	2,266	1,129	29	0	986
Minnesota	Black Dog	4	2,430	62	0	1,929	4,036	2,430	61	0	2,123
Minnesota	Clay Boswell	1	1,424	36	0	580	1,816	1,424	36	0	1,244
Minnesota	Clay Boswell	2	1,355	34	0	614	1,790	1,355	34	0	1,164
Minnesota	Clay Boswell	3	11,273	285	0	0	9,782	11,273	285	0	9,846
Minnesota	Clay Boswell	4	11,797	299	0	0	10,236	11,797	298	0	10,304
Minnesota	Fox Lake	3	1,218	31	0	1,003	2,060	1,218	31	0	1,064
Minnesota	Future Base	**1	0	0	0	0	0	0	0	0	0
Minnesota	High Bridge	3	907	23	0	1,324	2,110	907	23	0	792
Minnesota	High Bridge	4	701	18	0	845	1,453	701	18	0	612
Minnesota	High Bridge	5	1,240	31	0	1,109	2,165	1,240	31	0	1,083
Minnesota	High Bridge	6	2,116	54	0	0	1,836	2,116	53	0	1,849
Minnesota	Hoot Lake	2	354	9	0	932	1,239	354	9	0	309

TABLE 2. -- PHASE II ALLOWANCE ALLOCATIONS

State	Plant Name	Boiler [1]	Allowances for years 2000–2009					Allowances for years 2010 and thereafter			
			(A) [2] Unadjusted basic	(B) Special allowance reserve deduction	(C) Additional basic (§405(a)(3))	(D) Total Bonus	(E) [3] Total annual phase II	(F) [2] Unadjusted basic	(G) Special allowance reserve deduction	(H) Additional basic (§ 405(a)(3))	(I) [4] Total annual phase II
Minnesota	Hoot Lake	3	1,229	31	0	903	1,969	1,229	31	0	1,074
Minnesota	M L Hibbard	3	34	1	0	957	987	34	1	0	30
Minnesota	M L Hibbard	4	11	0	0	1,084	1,094	11	0	0	10
Minnesota	Minnesota Valley	3	71	2	0	876	938	71	2	0	62
Minnesota	Na 1 -- 7237	**2	0	0	0	0	0	0	0	0	0
Minnesota	Northeast Station	NEPP	1,203	30	0	0	1,044	1,203	30	0	1,051
Minnesota	Riverside	6	260	7	0	2,849	3,075	260	7	0	227
Minnesota	Riverside	7	103	3	0	1,249	1,336	103	3	0	90
Minnesota	Riverside	8	4,310	109	0	1,266	5,036	4,310	109	0	3,764
Minnesota	Sherburne County	1	14,960	379	0	0	12,981	14,960	378	0	13,067
Minnesota	Sherburne County	2	15,065	361	0	0	13,073	15,065	360	0	13,158
Minnesota	Sherburne County	3	14,805	375	0	0	12,846	14,805	374	0	12,931
Minnesota	Silver Lake	4	3,580	91	0	0	3,108	3,580	90	0	3,127
Minnesota	Syl Laskin	1	366	9	0	1,371	1,669	366	9	0	320
Minnesota	Syl Laskin	2	158	4	0	1,510	1,647	158	4	0	138
Mississippi	Baxter Wilson	1	53	1	0	313	360	366	9	0	320
Mississippi	Baxter Wilson	2	4,072	103	0	0	3,533	4,072	103	0	3,557
Mississippi	Delta	1	19	0	0	8	26	26	1	0	24
Mississippi	Delta	2	33	1	0	21	50	54	1	0	48
Mississippi	Gerald Andrus	1	3,750	95	0	0	3,254	3,750	95	0	3,275
Mississippi	Jack Watson	1	197	5	0	0	171	197	5	0	172
Mississippi	Jack Watson	2	206	5	0	0	179	206	5	0	180
Mississippi	Jack Watson	3	312	8	0	0	270	312	8	0	272
Mississippi	Jack Watson	4	8,598	218	0	0	7,460	8,598	217	0	7,510
Mississippi	Jack Watson	5	17,615	446	0	0	15,284	17,615	445	0	15,386
Mississippi	Moselle	1	16	0	0	21	35	38	1	0	33
Mississippi	Moselle	2	39	1	0	42	76	80	2	0	70
Mississippi	Moselle	3	10	0	0	33	42	43	1	0	38
Mississippi	Moselle	**6	0	0	0	0	0	0	0	0	0
Mississippi	Moselle	**7	0	0	0	0	0	0	0	0	0
Mississippi	Natchez	1	2	0	0	0	2	3	0	0	3
Mississippi	R D Morrow	1	5,485	139	0	0	4,759	5,485	138	0	4,791
Mississippi	R D Morrow	2	6,003	152	0	0	5,209	6,003	152	0	5,243
Mississippi	Rex Brown	3	8	0	0	34	41	42	1	0	37
Mississippi	Rex Brown	4	2	0	0	157	159	158	4	0	139
Mississippi	Rex Brown	1A	0	0	0	6	6	6	0	0	5
Mississippi	Rex Brown	1B	0	0	0	6	6	6	0	0	5
Mississippi	Sweatt	1	89	2	0	0	78	89	2	0	78
Mississippi	Sweatt	2	98	2	0	0	86	98	2	0	86
Mississippi	Victor J Daniel Jr	1	11,312	286	0	1,328	11,145	11,312	286	0	9,860
Mississippi	Victor J Daniel Jr	2	16,315	413	0	0	14,156	16,315	412	0	14,250
Mississippi	Wright	W4	0	0	0	0	0	0	0	0	0
Missouri	Asbury	1	7,770	196	175	0	6,916	7,770	196	175	6,962
Missouri	Blue Valley	3	5,336	135	0	0	4,630	5,336	135	0	4,661
Missouri	Chamois	2	6,235	158	0	0	5,410	6,235	157	0	5,446
Missouri	Columbia	6	1,033	26	0	0	895	1,033	26	0	902
Missouri	Columbia	7	4,149	104	0	0	3,601	4,149	104	0	3,624

TABLE 2. -- PHASE II ALLOWANCE ALLOCATIONS

State	Plant Name	Boiler [1]	Allowances for years 2000–2009					Allowances for years 2010 and thereafter			
			(A) [2] Unadjusted basic	(B) Special allowance reserve deduction	(C) Additional basic (§405(a)(3))	(D) Total Bonus	(E) [3] Total annual phase II	(F) [2] Unadjusted basic	(G) Special allowance reserve deduction	(H) Additional basic (§ 405(a)(3))	(I) [4] Total annual phase II
Missouri	Columbia	8	142	3	0	0	125	142	3	0	124
Missouri	Combustion Turbine 1	**NA4	0	0	0	0	0	0	0	0	0
Missouri	Combustion Turbine 1	**NA5	0	0	0	0	0	0	0	0	0
Missouri	Combustion Turbine 1	**NA6	0	0	0	0	0	0	0	0	0
Missouri	Combustion Turbine 1	**NA7	0	0	0	0	0	0	0	0	0
Missouri	Combustion Turbine 3	**3	0	0	0	0	0	0	0	0	0
Missouri	Empire Energy Center	**4	0	0	0	0	0	0	0	0	0
Missouri	Empire Energy Center	**NA2	0	0	0	0	0	0	0	0	0
Missouri	Empire Energy Center	**NA3	0	0	0	0	0	0	0	0	0
Missouri	Grand Avenue	**7	12	0	0	0	11	12	0	0	11
Missouri	Grand Avenue	**9	14	0	0	0	13	14	0	0	13
Missouri	Hawthorn	5	14,041	355	0	485	12,869	14,041	354	0	12,265
Missouri	Iatan	1	18,520	469	0	0	16,070	18,520	468	0	16,176
Missouri	Iatan	**2	0	0	0	0	0	0	0	0	0
Missouri	James River	3	3,802	96	0	0	3,299	777	20	0	678
Missouri	James River	4	6,828	173	0	0	5,924	1,429	36	0	1,248
Missouri	James River	5	2,374	60	55	0	2,115	2,374	60	55	2,129
Missouri	James River	**GT2	691	18	0	0	599	691	17	0	604
Missouri	Jim Hill	**1	0	0	0	0	0	0	0	0	0
Missouri	Labadie	1	19,538	495	455	0	17,408	19,538	493	455	17,521
Missouri	Labadie	2	18,213	461	424	0	16,228	18,213	460	424	16,332
Missouri	Labadie	3	19,464	493	453	0	17,342	19,464	491	453	17,455
Missouri	Labadie	4	17,346	439	404	0	15,455	17,346	438	404	15,555
Missouri	Lake Road	6	692	18	0	0	600	692	17	0	605
Missouri	Meramec	1	1,174	30	0	1,718	2,736	1,174	30	0	1,025
Missouri	Meramec	2	1,261	32	0	1,675	2,769	1,261	32	0	1,101
Missouri	Meramec	3	2,694	68	0	3,700	6,038	2,694	68	0	2,353
Missouri	Meramec	4	2,914	74	0	4,625	7,153	2,914	74	0	2,545
Missouri	Montrose	1	3,549	90	83	0	3,162	3,549	90	83	3,183
Missouri	Montrose	2	3,935	100	92	0	3,506	3,935	99	92	3,529
Missouri	Montrose	3	4,841	123	113	0	4,312	4,841	122	113	4,342
Missouri	Na 1 -- 7223	**1	0	0	0	0	0	0	0	0	0
Missouri	Na 1 -- 7223	**2	0	0	0	0	0	0	0	0	0
Missouri	Na 1 -- 7223	**3	0	0	0	0	0	0	0	0	0
Missouri	Na 1 -- 7228	**1	0	0	0	0	0	0	0	0	0
Missouri	New Madrid	1	13,554	343	316	0	12,077	13,554	342	316	12,155
Missouri	New Madrid	2	15,593	395	363	0	13,893	15,593	394	363	13,983
Missouri	Rg 1 & 2	**1	0	0	0	0	0	0	0	0	0
Missouri	Rg 1 & 2	**2	0	0	0	0	0	0	0	0	0
Missouri	Rush Island	1	15,856	401	0	1,083	14,842	15,856	400	0	13,850
Missouri	Rush Island	2	17,702	448	0	160	15,520	17,702	447	0	15,462
Missouri	Sibley	1	593	15	0	0	514	593	15	0	518
Missouri	Sibley	2	726	18	0	0	632	726	18	0	636
Missouri	Sibley	3	8,498	215	198	0	7,572	8,498	215	198	7,620
Missouri	Sikeston	1	7,760	196	0	0	6,734	7,760	196	0	6,778
Missouri	Sioux	1	12,048	305	280	0	10,734	12,048	304	280	10,804
Missouri	Sioux	2	10,565	267	246	0	9,414	10,565	267	246	9,474

TABLE 2. -- PHASE II ALLOWANCE ALLOCATIONS

State	Plant Name	Boiler [1]	Allowances for years 2000–2009					Allowances for years 2010 and thereafter			
			(A) [2] Unadjusted basic	(B) Special allowance reserve deduction	(C) Additional basic (§405(a)(3))	(D) Total Bonus	(E) [3] Total annual phase II	(F) [2] Unadjusted basic	(G) Special allowance reserve deduction	(H) Additional basic (§ 405(a)(3))	(I) [4] Total annual phase II
Missouri	Southwest	1	4,707	119	0	64	4,149	4,707	119	0	4,111
Missouri	Thomas Hill	MB1	4,921	125	115	0	4,364	4,921	124	115	4,414
Missouri	Thomas Hill	MB2	8,272	209	193	0	7,371	8,272	209	193	7,416
Missouri	Thomas Hill	MB3	20,862	526	0	0	18,102	20,862	527	0	18,222
Montana	Colstrip	1	8,409	213	0	500	7,798	8,409	212	0	7,345
Montana	Colstrip	2	8,383	212	0	535	7,810	8,383	212	0	7,322
Montana	Colstrip	3	4,195	106	0	733	4,373	4,195	106	0	3,864
Montana	Colstrip	4	3,334	84	0	0	2,893	3,334	84	0	2,912
Montana	Frank Bird	1	0	0	0	0	0	0	0	0	0
Montana	J E Corette	2	5,571	141	0	186	5,020	5,571	141	0	4,866
Montana	Lewis & Clark	B1	1,601	41	0	43	1,432	1,601	40	0	1,366
Nebraska	Bluffs	4	21	1	0	0	18	21	1	0	18
Nebraska	C W Burdick	B–3	0	0	0	0	0	0	0	0	0
Nebraska	Canaday	1	716	18	0	0	621	716	18	0	625
Nebraska	Gerald Gentleman Sta	1	10,221	259	0	1,860	10,728	10,221	258	0	9,828
Nebraska	Gerald Gentleman Sta	2	20,080	508	0	0	17,424	20,080	507	0	17,538
Nebraska	Harold Kramer	1	3	0	0	35	38	3	0	0	3
Nebraska	Harold Kramer	2	3	0	0	37	40	3	0	0	3
Nebraska	Harold Kramer	3	191	5	0	884	1,051	191	5	0	188
Nebraska	Harold Kramer	4	225	6	0	1,881	2,077	225	6	0	188
Nebraska	Hastings Energy Ctr	1	2,668	68	0	0	2,314	2,668	67	0	2,331
Nebraska	Lon Wright	6	1,350	34	0	862	2,034	1,350	34	0	1,179
Nebraska	Na 1 -- 7019	**NA2	0	0	0	0	0	0	0	0	0
Nebraska	Nebraska City	1	15,077	382	0	0	13,062	15,077	381	0	13,189
Nebraska	North Omaha	1	1,192	30	0	1,345	2,379	1,192	30	0	1,041
Nebraska	North Omaha	2	1,841	47	0	1,677	3,274	1,841	46	0	1,608
Nebraska	North Omaha	3	2,167	55	0	1,312	3,192	2,167	55	0	1,893
Nebraska	North Omaha	4	2,869	73	0	1,339	3,827	2,869	72	0	2,506
Nebraska	North Omaha	5	3,471	88	0	1,810	4,621	3,471	88	0	3,031
Nebraska	Platte	1	3,345	85	0	0	2,902	3,345	84	0	2,922
Nebraska	Sheldon	1	904	23	0	1,377	2,161	904	23	0	789
Nebraska	Sheldon	2	964	24	0	1,438	2,273	964	24	0	842
Nevada	Clark	1	16	0	0	6	20	26	1	0	22
Nevada	Clark	2	298	8	0	13	271	298	8	0	260
Nevada	Clark	3	1	0	0	17	18	18	0	0	18
Nevada	Fort Churchill	1	408	10	0	15	368	408	10	0	355
Nevada	Fort Churchill	2	621	16	0	34	573	621	16	0	542
Nevada	Harry Allen	**1	0	0	0	0	0	0	0	0	0
Nevada	Harry Allen	**2	0	0	0	0	0	0	0	0	0
Nevada	Harry Allen	**3	0	0	0	0	0	0	0	0	0
Nevada	Harry Allen	**4	0	0	0	0	0	0	0	0	0
Nevada	Harry Allen	**GT3	0	0	0	0	0	0	0	0	0
Nevada	Harry Allen	**GT4	0	0	0	0	0	0	0	0	0
Nevada	Mohave	1	29,849	757	0	541	26,437	29,849	755	0	26,071
Nevada	Mohave	2	29,728	753	0	543	26,336	29,728	751	0	25,966
Nevada	North Valmy	1	7,493	190	0	403	6,904	7,493	189	0	6,545
Nevada	North Valmy	2	4,524	115	0	303	4,228	4,524	114	0	3,952

TABLE 2. -- PHASE II ALLOWANCE ALLOCATIONS

State	Plant Name	Boiler [1]	Allowances for years 2000–2009					Allowances for years 2010 and thereafter			
			(A) [2]	(B)	(C)	(D)	(E) [3]	(F) [2]	(G)	(H)	(I) [4]
			Unadjusted basic	Special allowance reserve deduction	Additional basic (§405(a)(3))	Total Bonus	Total annual phase II	Unadjusted basic	Special allowance reserve deduction	Additional basic (§ 405(a)(3))	Total annual phase II
Nevada	Reid Gardner	1	2,264	57	0	191	2,156	2,264	57	0	1,978
Nevada	Reid Gardner	2	2,311	59	0	180	2,165	2,311	58	0	2,019
Nevada	Reid Gardner	3	2,245	57	0	161	2,109	2,245	57	0	1,961
Nevada	Reid Gardner	4	2,672	68	0	476	2,794	2,672	67	0	2,334
Nevada	Sunrise	1	29	1	0	25	50	60	2	0	52
Nevada	Tracy	1	15	0	0	1	15	15	0	0	13
Nevada	Tracy	2	48	1	0	4	46	48	1	0	42
Nevada	Tracy	3	347	9	0	10	311	347	9	0	303
New Hampshire	Merrimack	1	4,900	124	0	0	4,252	4,900	124	0	4,280
New Hampshire	Merrimack	2	10,560	267	0	0	9,164	10,560	267	0	9,223
New Hampshire	Newington	1	12,107	306	0	1,068	11,574	12,107	306	0	10,575
New Hampshire	Schiller	4	1,643	42	0	76	1,502	1,643	41	0	1,436
New Hampshire	Schiller	5	1,481	38	0	162	1,446	1,481	37	0	1,294
New Hampshire	Schiller	6	1,878	48	0	0	1,628	1,878	47	0	1,641
New Jersey	B L England	1	4,355	110	0	0	3,779	4,355	110	0	3,804
New Jersey	B L England	2	5,634	143	0	0	4,888	5,634	142	0	4,921
New Jersey	B L England	3	2,765	70	0	0	2,400	2,765	70	0	2,415
New Jersey	Bergen	1	2,260	57	0	0	1,962	2,260	57	0	1,974
New Jersey	Bergen	2	2,335	59	0	0	2,026	2,335	59	0	2,039
New Jersey	Burlington	7	641	16	0	0	557	641	16	0	560
New Jersey	Butler	**4	0	0	0	0	0	0	0	0	0
New Jersey	Deepwater	1	1,330	34	0	0	1,154	1,330	34	0	1,161
New Jersey	Deepwater	3	12	0	0	0	11	12	0	0	11
New Jersey	Deepwater	4	67	2	0	0	58	67	2	0	58
New Jersey	Deepwater	5	6	0	0	0	5	6	0	0	5
New Jersey	Deepwater	6	67	2	0	0	58	67	2	0	58
New Jersey	Deepwater	8	3,137	79	0	0	2,722	3,137	79	0	2,740
New Jersey	Deepwater	9	2,073	52	0	0	1,800	2,073	52	0	1,811
New Jersey	Gilbert	01	69	2	0	0	60	69	2	0	60
New Jersey	Gilbert	02	43	2	0	0	37	43	2	0	37
New Jersey	Gilbert	03	799	20	0	0	694	799	20	0	698
New Jersey	Gilbert	04	685	17	0	0	595	685	17	0	598
New Jersey	Gilbert	05	681	17	0	0	592	681	17	0	595
New Jersey	Gilbert	06	677	17	0	0	588	677	17	0	591
New Jersey	Gilbert	07	692	18	0	0	600	692	17	0	605
New Jersey	Hudson	1	1,368	35	0	0	1,187	1,368	35	0	1,194
New Jersey	Hudson	2	17,350	439	0	788	15,643	17,350	438	0	15,155
New Jersey	Kearny	7	166	4	0	0	144	166	4	0	145
New Jersey	Kearny	8	. 175	4	0	0	152	175	4	0	153
New Jersey	Linden	2	736	19	0	0	638	736	19	0	642
New Jersey	Linden	4	482	12	0	0	419	482	12	0	421
New Jersey	Linden	11	1,106	28	0	0	960	1,106	28	0	966
New Jersey	Linden	12	750	19	0	0	650	750	19	0	653
New Jersey	Linden	13	1,002	25	0	0	870	1,002	25	0	876
New Jersey	Mercer	1	8,688	220	0	80	7,619	8,688	219	0	7,589
New Jersey	Mercer	2	7,992	202	0	445	7,381	7,992	202	0	6,961
New Jersey	Na 3 -- 7141	**1	0	0	0	0	0	0	0	0	0

TABLE 2. -- PHASE II ALLOWANCE ALLOCATIONS

State	Plant Name	Boiler [1]	Allowances for years 2000–2009					Allowances for years 2010 and thereafter			
			(A) [2] Unadjusted basic	(B) Special allowance reserve deduction	(C) Additional basic (§405(a)(3))	(D) Total Bonus	(E) [3] Total annual phase II	(F) [2] Unadjusted basic	(G) Special allowance reserve deduction	(H) Additional basic (§ 405(a)(3))	(I) [4] Total annual phase II
New Jersey	Na 3 -- 7141	**2	0	0	0	0	0	0	0	0	0
New Jersey	Na 4 -- 7142	**1	0	0	0	0	0	0	0	0	0
New Jersey	Na 5 -- 7217	**1	0	0	0	0	0	0	0	0	0
New Jersey	Na 5 -- 7217	**2	0	0	0	0	0	0	0	0	0
New Jersey	Na 6 -- 7218	**1	0	0	0	0	0	0	0	0	0
New Jersey	Na 6 -- 7218	**2	0	0	0	0	0	0	0	0	0
New Jersey	Sayreville	02	2	0	0	0	2	2	0	0	2
New Jersey	Sayreville	03	2	0	0	0	2	2	0	0	2
New Jersey	Sayreville	05	46	0	0	0	41	46	0	0	41
New Jersey	Sayreville	06	42	0	0	0	39	42	0	0	37
New Jersey	Sayreville	07	875	22	0	0	759	875	22	0	764
New Jersey	Sayreville	08	1,019	26	0	0	884	1,019	26	0	890
New Jersey	Sewaren	1	133	3	0	0	116	133	3	0	117
New Jersey	Sewaren	2	389	10	0	0	336	389	10	0	340
New Jersey	Sewaren	3	290	7	0	0	252	290	7	0	254
New Jersey	Sewaren	4	656	17	0	0	569	656	17	0	573
New Jersey	Sewaren	5	0	0	0	0	0	0	0	0	0
New Jersey	Werner	04	223	6	0	0	193	223	6	0	194
New Mexico	Cunningham	121B	2	0	0	40	42	50	1	0	44
New Mexico	Cunningham	122B	4	0	0	265	269	232	6	0	203
New Mexico	Escalante	1	1,872	42	0	410	1,862	1,872	42	0	1,461
New Mexico	Escalante	**2	0	0	0	0	0	0	0	0	0
New Mexico	Four Corners	1	3,790	96	0	277	3,585	3,790	96	0	3,310
New Mexico	Four Corners	2	3,791	96	0	272	3,561	3,791	96	0	3,311
New Mexico	Four Corners	3	4,747	120	0	323	4,443	4,747	120	0	4,146
New Mexico	Four Corners	4	13,552	343	0	847	12,406	13,552	342	0	11,837
New Mexico	Four Corners	5	14,037	355	0	860	13,170	14,037	354	0	12,261
New Mexico	Maddox	**3	97	2	0	0	85	97	2	0	85
New Mexico	Maddox	051B	2	0	0	168	170	140	4	0	122
New Mexico	North Lovington	S2	0	0	0	0	0	0	0	0	0
New Mexico	Person	3	0	0	0	0	0	0	0	0	0
New Mexico	Person	4	0	0	0	0	0	0	0	0	0
New Mexico	Reeves	1	0	0	0	4	4	7	0	0	6
New Mexico	Reeves	2	0	0	0	7	7	5	0	0	4
New Mexico	Reeves	3	104	3	0	13	103	115	3	0	100
New Mexico	Rio Grande	6	0	0	0	3	3	5	0	0	4
New Mexico	Rio Grande	7	0	0	0	1	1	1	0	0	1
New Mexico	Rio Grande	8	1	0	0	79	80	71	2	0	62
New Mexico	San Juan	1	8,423	213	0	570	7,676	8,423	213	0	7,357
New Mexico	San Juan	2	6,171	156	0	522	5,677	6,171	156	0	5,390
New Mexico	San Juan	3	14,832	375	0	697	13,768	14,832	374	0	12,956
New Mexico	San Juan	4	13,917	352	0	667	12,944	13,917	351	0	12,156
New York	Albany	1	2,057	52	0	0	1,766	2,057	52	0	1,797
New York	Albany	2	1,777	45	0	0	1,542	1,777	45	0	1,552
New York	Albany	3	1,821	46	0	0	1,580	1,821	46	0	1,591
New York	Albany	4	1,926	49	0	0	1,672	1,926	49	0	1,684
New York	Arthur Kill	20	1,669	43	0	0	1,465	1,669	43	0	1,475

TABLE 2. — — PHASE II ALLOWANCE ALLOCATIONS

State	Plant Name	Boiler [1]	Allowances for years 2000–2009					Allowances for years 2010 and thereafter			
			(A) [2] Unadjusted basic	(B) Special allowance reserve deduction	(C) Additional basic (§405(a)(3))	(D) Total Bonus	(E) [3] Total annual phase II	(F) [2] Unadjusted basic	(G) Special allowance reserve deduction	(H) Additional basic (§ 405(a)(3))	(I) [4] Total annual phase II
New York	Arthur Kill	30	2,705	68	0	0	2,348	2,705	68	0	2,363
New York	Astoria	10	1,389	35	0	0	1,206	1,389	35	0	1,213
New York	Astoria	20	1,775	45	0	0	1,541	1,775	45	0	1,550
New York	Astoria	30	3,456	87	0	0	3,000	3,456	87	0	3,019
New York	Astoria	40	2,715	69	0	0	2,356	2,715	69	0	2,371
New York	Astoria	50	3,085	78	0	0	2,677	3,085	78	0	2,695
New York	Bowline Point	1	4,845	123	0	0	4,203	4,845	122	0	4,232
New York	Bowline Point	2	4,846	123	0	0	4,204	4,846	122	0	4,233
New York	C R Huntley	63	2,812	71	0	196	2,636	2,812	71	0	2,456
New York	C R Huntley	64	2,993	76	0	45	2,642	2,993	76	0	2,614
New York	C R Huntley	65	3,077	78	0	0	2,670	3,077	78	0	2,687
New York	C R Huntley	66	3,116	79	0	0	2,706	3,116	79	0	2,723
New York	C R Huntley	67	6,599	167	0	0	5,727	6,599	167	0	5,764
New York	C R Huntley	68	6,149	156	0	0	5,335	6,149	155	0	5,371
New York	Charles Poletti	001	7,357	186	0	0	6,385	7,357	186	0	6,426
New York	Danskammer	1	1,083	27	0	0	941	1,083	27	0	946
New York	Danskammer	2	1,051	27	0	0	912	1,051	27	0	918
New York	Danskammer	3	3,576	91	0	0	3,102	3,576	90	0	3,124
New York	Danskammer	4	6,891	174	0	0	5,980	6,891	174	0	6,019
New York	Dunkirk	1	3,248	82	0	0	2,819	3,248	82	0	2,837
New York	Dunkirk	2	3,690	93	0	0	3,202	3,690	93	0	3,223
New York	Dunkirk	3	6,046	153	0	0	5,246	6,046	153	0	5,261
New York	Dunkirk	4	6,749	171	0	0	5,856	6,749	170	0	5,895
New York	E F Barrett	10	2,710	69	0	0	2,351	2,710	68	0	2,368
New York	E F Barrett	20	2,671	68	0	0	2,317	2,671	67	0	2,333
New York	East River	50	1,596	40	0	0	1,385	1,596	40	0	1,394
New York	East River	60	1,633	41	0	0	1,418	1,633	41	0	1,427
New York	East River	70	1,181	30	0	0	1,024	1,181	30	0	1,031
New York	Far Rockaway	40	537	14	0	0	465	537	14	0	469
New York	Glenwood	40	1,072	27	0	0	931	1,072	27	0	936
New York	Glenwood	50	1,032	26	0	0	896	1,032	26	0	901
New York	Goudey	11	905	23	0	0	785	905	23	0	790
New York	Goudey	12	892	23	0	0	773	892	23	0	779
New York	Goudey	13	3,756	95	0	0	3,260	3,756	95	0	3,281
New York	Greenidge	4	1,121	28	0	0	973	1,121	28	0	979
New York	Greenidge	5	1,119	28	0	0	971	1;119	28	0	978
New York	Greenidge	6	3,639	92	0	0	3,158	3,639	92	0	3,178
New York	Hickling	1	808	20	0	18	720	808	20	0	708
New York	Hickling	2	808	20	0	18	720	808	20	0	708
New York	Hickling	3	969	25	0	47	887	969	24	0	847
New York	Hickling	4	1,010	26	0	49	925	1,010	26	0	882
New York	Jennison	1	684	17	0	51	645	684	17	0	598
New York	Jennison	2	712	18	0	53	671	712	18	0	622
New York	Jennison	3	714	18	0	99	718	714	18	0	624
New York	Jennison	4	714	18	0	99	718	714	18	0	624
New York	Lovett	3	256	7	0	0	223	256	7	0	225
New York	Lovett	4	5,222	132	0	0	4,532	5,222	132	0	4,561

TABLE 2. -- PHASE II ALLOWANCE ALLOCATIONS

State	Plant Name	Boiler [1]	Allowances for years 2000–2009					Allowances for years 2010 and thereafter			
			(A) [2] Unadjusted basic	(B) Special allowance reserve deduction	(C) Additional basic (§405(a)(3))	(D) Total Bonus	(E) [3] Total annual phase II	(F) [2] Unadjusted basic	(G) Special allowance reserve deduction	(H) Additional basic (§ 405(a)(3))	(I) [4] Total annual phase II
New York	Lovett	5	5,700	144	0	0	4,946	5,700	144	0	4,979
New York	Milliken	1	5,631	143	0	0	4,885	5,631	142	0	4,919
New York	Milliken	2	5,959	151	0	0	5,171	5,959	150	0	5,205
New York	Northport	1	9,510	241	0	0	8,252	9,510	240	0	8,307
New York	Northport	2	11,575	293	0	0	10,044	11,575	292	0	10,111
New York	Northport	3	12,710	322	0	0	11,028	12,710	321	0	11,102
New York	Northport	4	6,620	168	0	0	5,743	6,620	167	0	5,782
New York	Oswego	1	0	0	0	0	0	0	0	0	0
New York	Oswego	2	0	0	0	0	0	0	0	0	0
New York	Oswego	3	103	3	0	0	89	103	3	0	90
New York	Oswego	4	455	12	0	0	395	455	11	0	398
New York	Oswego	5	9,499	240	0	8,929	17,172	9,499	240	0	8,297
New York	Oswego	6	5,494	139	0	0	4,767	5,494	139	0	4,799
New York	Port Jefferson	1	543	14	0	0	470	543	14	0	474
New York	Port Jefferson	2	569	14	0	0	494	569	14	0	497
New York	Port Jefferson	3	5,025	127	0	0	4,361	5,025	127	0	4,389
New York	Port Jefferson	4	5,920	150	0	0	5,137	5,920	149	0	5,171
New York	Ravenswood	10	3,617	92	0	0	3,138	3,617	91	0	3,160
New York	Ravenswood	20	3,060	77	0	0	2,656	3,060	77	0	2,673
New York	Ravenswood	30	5,704	144	0	0	4,950	5,704	144	0	4,982
New York	Rochester 3	1	0	0	0	0	0	0	0	0	0
New York	Rochester 3	2	0	0	0	0	0	0	0	0	0
New York	Rochester 3	3	2	0	0	0	2	2	0	0	2
New York	Rochester 3	4	0	0	0	0	0	0	0	0	0
New York	Rochester 3	7	71	2	0	139	201	71	2	0	62
New York	Rochester 3	8	0	0	0	0	0	0	0	0	0
New York	Rochester 3	12	2,593	66	0	0	2,250	2,593	65	0	2,265
New York	Rochester 7	1	1,249	32	0	0	1,084	1,249	32	0	1,090
New York	Rochester 7	2	1,858	47	0	0	1,612	1,858	47	0	1,623
New York	Rochester 7	3	1,813	46	0	0	1,573	1,813	46	0	1,583
New York	Rochester 7	4	2,529	64	0	0	2,194	2,529	64	0	2,209
New York	Roseton	1	16,577	420	0	1,077	15,461	16,577	416	0	14,480
New York	Roseton	2	14,766	374	0	1,972	14,802	14,766	373	0	12,915
New York	S A Carlson	9	759	19	0	0	659	759	19	0	663
New York	S A Carlson	10	768	19	0	0	667	768	19	0	671
New York	S A Carlson	11	486	13	0	0	421	486	12	0	425
New York	S A Carlson	12	1,457	36	0	0	1,266	1,457	36	0	1,273
New York	Somerset	1	15,871	402	0	0	13,772	15,871	401	0	13,802
New York	Waterside	41	268	7	0	0	251	268	7	0	252
New York	Waterside	42	283	7	0	0	246	283	7	0	247
New York	Waterside	51	476	13	0	0	413	476	13	0	415
New York	Waterside	52	476	12	0	0	414	476	12	0	415
New York	Waterside	61	492	12	0	0	428	492	12	0	430
New York	Waterside	62	578	14	0	0	503	578	14	0	505
New York	Waterside	80	1,288	33	0	0	1,118	1,288	33	0	1,125
New York	Waterside	90	1,409	35	0	0	1,223	1,409	35	0	1,231
New York	59Th Street	110	73	2	0	0	64	73	2	0	64

TABLE 2. — — PHASE II ALLOWANCE ALLOCATIONS

			Allowances for years 2000–2009					Allowances for years 2010 and thereafter			
			(A) [2]	(B)	(C)	(D)	(E) [3]	(F) [2]	(G)	(H)	(I) [4]
State	Plant Name	Boiler [1]	Unadjusted basic	Special allowance reserve deduction	Additional basic (§405(a)(3))	Total Bonus	Total annual phase II	Unadjusted basic	Special allowance reserve deduction	Additional basic (§ 405(a)(3)	Total annual phase II
New York	74Th Street	120	511	13	0	0	443	511	3	0	447
New York	74Th Street	121	513	13	0	0	445	513	13	0	448
New York	74Th Street	122	511	13	0	0	443	511	13	0	447
North Carolina	Asheville	1	7,567	192	0	0	6,566	7,567	191	0	6,610
North Carolina	Asheville	2	6,012	152	0	0	5,218	6,012	152	0	5,251
North Carolina	Belews Creek	1	35,325	895	0	0	30,648	35,325	893	0	30,855
North Carolina	Belews Creek	2	37,208	943	0	0	32,282	37,208	940	0	32,500
North Carolina	Buck	5	2	0	0	1,029	1,031	2	0	0	2
North Carolina	Buck	6	1	0	0	588	589	1	0	0	1
North Carolina	Buck	7	393	10	0	714	1,055	393	10	0	343
North Carolina	Buck	8	686	17	0	1,721	2,317	686	17	0	800
North Carolina	Buck	9	2,074	53	0	1,056	2,855	2,074	52	0	1,812
North Carolina	Cape Fear	3	0	0	0	599	599	0	0	0	0
North Carolina	Cape Fear	4	0	0	0	599	599	0	0	0	0
North Carolina	Cape Fear	5	3,303	84	0	492	3,357	3,303	83	0	2,885
North Carolina	Cape Fear	6	3,378	86	0	957	3,888	3,378	85	0	2,951
North Carolina	Cliffside	1	1	0	0	897	898	1	0	0	1
North Carolina	Cliffside	2	1	0	0	871	872	1	0	0	1
North Carolina	Cliffside	3	24	1	0	1,270	1,291	24	1	0	21
North Carolina	Cliffside	4	20	1	0	1,286	1,305	20	1	0	17
North Carolina	Cliffside	5	13,530	342	0	2,199	13,840	13,530	342	0	11,818
North Carolina	Dan River	1	415	11	0	1,546	1,908	415	10	0	363
North Carolina	Dan River	2	381	10	0	2,446	2,776	381	10	0	332
North Carolina	Dan River	3	681	17	0	2,196	2,766	681	17	0	595
North Carolina	G G Allen	1	35	1	0	2,396	2,427	35	1	0	30
North Carolina	G G Allen	2	39	1	0	2,779	2,813	39	1	0	34
North Carolina	G G Allen	3	5,123	130	0	1,638	6,082	5,123	129	0	4,475
North Carolina	G G Allen	4	3,659	93	0	2,542	5,718	3,659	92	0	3,196
North Carolina	G G Allen	5	4,432	112	0	2,093	5,940	4,432	112	0	3,871
North Carolina	L V Sutton	1	824	21	0	1,330	2,045	824	21	0	720
North Carolina	L V Sutton	2	1,360	34	0	1,080	2,261	1,360	34	0	1,186
North Carolina	L V Sutton	3	5,831	148	0	3,195	8,253	5,831	147	0	5,093
North Carolina	Lee	1	741	19	0	987	1,630	741	19	0	647
North Carolina	Lee	2	948	24	0	855	1,677	948	24	0	828
North Carolina	Lee	3	5,536	140	0	918	5,723	5,536	140	0	4,837
North Carolina	Marshall	1	8,225	208	0	1,567	8,704	8,225	208	0	7,184
North Carolina	Marshall	2	9,292	235	0	1,133	9,196	9,292	235	0	8,116
North Carolina	Marshall	3	17,013	431	0	976	15,738	17,013	429	0	14,861
North Carolina	Marshall	4	15,255	386	0	1,785	15,023	15,255	385	0	13,325
North Carolina	Mayo	1A	14,609	370	0	0	12,677	14,609	369	0	12,760
North Carolina	Mayo	1B	14,609	370	0	0	12,677	14,609	369	0	12,760
North Carolina	Riverbend	7	1,539	39	0	605	2,140	1,539	39	0	1,344
North Carolina	Riverbend	8	1,420	36	0	670	2,103	1,420	36	0	1,240
North Carolina	Riverbend	9	406	10	0	1,911	2,264	406	10	0	355
North Carolina	Riverbend	10	1,339	34	0	1,454	2,616	1,339	34	0	1,169
North Carolina	Roxboro	1	12,671	321	0	0	10,995	12,671	320	0	11,068
North Carolina	Roxboro	2	22,445	568	0	0	19,476	22,445	567	0	19,605

TABLE 2. -- PHASE II ALLOWANCE ALLOCATIONS

State	Plant Name	Boiler [1]	Allowances for years 2000–2009					Allowances for years 2010 and thereafter			
			(A) [2] Unadjusted basic	(B) Special allowance reserve deduction	(C) Additional basic (§405(a)(3))	(D) Total Bonus	(E) [3] Total annual phase II	(F) [2] Unadjusted basic	(G) Special allowance reserve deduction	(H) Additional basic (§ 405(a)(3))	(I) [4] Total annual phase II
North Carolina	Roxboro	3A	10,154	257	0	210	9,021	10,154	256	0	8,870
North Carolina	Roxboro	3B	10,154	257	0	210	9,021	10,154	256	0	8,870
North Carolina	Roxboro	4A	11,892	301	0	0	10,319	11,892	300	0	10,387
North Carolina	Roxboro	4B	11,892	301	0	0	10,319	11,892	300	0	10,387
North Carolina	W H Weatherspoon	1	533	13	0	656	1,118	533	13	0	466
North Carolina	W H Weatherspoon	2	540	14	0	653	1,121	540	14	0	471
North Carolina	W H Weatherspoon	3	1,069	27	0	690	1,618	1,069	27	0	934
North Dakota	Antelope Valley	B1	13,652	346	0	0	11,846	13,652	345	0	11,824
North Dakota	Antelope Valley	B2	12,720	322	0	0	11,037	12,720	321	0	11,111
North Dakota	Coal Creek	1	26,637	674	0	0	23,111	26,637	672	0	23,267
North Dakota	Coal Creek	2	24,212	613	0	0	21,007	24,212	611	0	21,149
North Dakota	Coyote	B1	18,490	468	0	0	16,044	18,490	467	0	16,150
North Dakota	Dakotas	**1	0	0	0	0	0	0	0	0	0
North Dakota	Leland Olds	1	10,404	263	0	0	9,027	10,404	263	0	9,087
North Dakota	Leland Olds	2	30,171	765	0	0	26,175	30,171	763	0	26,352
North Dakota	Milton R Young	B1	14,799	375	0	0	12,841	14,799	374	0	12,926
North Dakota	Milton R Young	B2	18,152	459	0	0	15,751	18,152	458	0	15,855
North Dakota	R M Heskett	B2	3,659	93	0	0	3,174	3,659	92	0	3,196
North Dakota	Stanton	1	8,510	215	0	0	7,385	8,510	215	0	7,433
North Dakota	Stanton	10	1,525	39	0	0	1,322	1,525	39	0	1,332
Ohio	Acme	9	1	0	0	0	1	1	0	0	1
Ohio	Acme	11	7	0	0	0	7	7	0	0	7
Ohio	Acme	13	10	0	0	1,837	1,846	10	0	0	9
Ohio	Acme	14	15	0	0	2,505	2,519	15	0	0	14
Ohio	Acme	15	21	0	0	3,346	3,365	21	0	0	19
Ohio	Acme	16	2,316	59	0	394	2,403	2,316	58	0	2,023
Ohio	Acme	91	888	22	0	1,236	2,007	888	22	0	776
Ohio	Acme	92	794	20	0	1,105	1,794	794	20	0	694
Ohio	Ashtabula	7	8,036	203	187	0	7,160	8,036	203	187	7,206
Ohio	Ashtabula	8	2,669	67	0	0	2,317	2,669	66	0	2,332
Ohio	Ashtabula	9	2,276	58	0	0	1,974	2,276	56	0	1,987
Ohio	Ashtabula	10	2,054	52	0	0	1,779	2,054	52	0	1,794
Ohio	Ashtabula	11	2,160	54	0	0	1,873	2,160	54	0	1,886
Ohio	Avon Lake	9	2,933	74	0	0	2,545	2,933	74	0	2,562
Ohio	Avon Lake	10	2,575	65	0	0	2,234	2,575	65	0	2,249
Ohio	Avon Lake	11	5,594	142	130	0	4,984	5,594	141	130	5,016
Ohio	Avon Lake	12	16,918	428	394	0	15,074	16,918	427	394	15,171
Ohio	Bay Shore	1	5,392	136	0	0	4,680	5,392	136	0	4,710
Ohio	Bay Shore	2	5,136	130	0	0	4,456	5,136	130	0	4,486
Ohio	Bay Shore	3	4,887	124	0	0	4,240	4,887	123	0	4,269
Ohio	Bay Shore	4	8,042	204	0	0	6,976	8,042	203	0	7,024
Ohio	Cardinal	1	16,449	416	383	0	14,657	16,449	415	383	14,751
Ohio	Cardinal	2	18,395	466	428	0	16,389	18,395	464	428	16,496
Ohio	Cardinal	3	19,104	484	0	583	17,159	19,104	482	0	16,887
Ohio	Conesville	1	2,019	51	47	0	1,799	2,019	51	47	1,811
Ohio	Conesville	2	2,349	59	55	0	2,094	2,349	59	55	2,107
Ohio	Conesville	3	2,636	67	61	0	2,350	2,636	67	61	2,365

TABLE 2. — PHASE II ALLOWANCE ALLOCATIONS

State	Plant Name	Boiler [1]	Allowances for years 2000–2009					Allowances for years 2010 and thereafter			
			(A) [2] Unadjusted basic	(B) Special allowance reserve deduction	(C) Additional basic (§405(a)(3))	(D) Total Bonus	(E) [3] Total annual phase II	(F) [2] Unadjusted basic	(G) Special allowance reserve deduction	(H) Additional basic (§ 405(a)(3))	(I) [4] Total annual phase II
Ohio	Conesville	4	23,410	593	545	0	20,856	23,410	591	545	20,993
Ohio	Conesville	5	8,190	207	0	1,856	8,965	8,190	207	0	7,153
Ohio	Conesville	6	9,070	230	0	1,457	9,326	9,070	229	0	7,922
Ohio	Dover	**6	175	4	0	0	152	175	4	0	153
Ohio	Eastlake	1	3,746	95	87	0	3,336	3,746	95	87	3,350
Ohio	Eastlake	2	4,146	105	97	0	3,694	4,146	105	97	3,718
Ohio	Eastlake	3	4,808	122	112	0	4,284	4,808	121	112	4,312
Ohio	Eastlake	4	6,966	176	162	0	6,207	6,966	176	162	6,246
Ohio	Eastlake	5	18,483	468	430	0	16,468	18,483	467	430	16,574
Ohio	Edgewater	11	1,003	25	0	0	871	481	12	0	420
Ohio	Edgewater	12	1,081	27	0	0	939	519	13	0	453
Ohio	Edgewater	13	2,426	61	56	0	2,162	2,426	61	56	2,175
Ohio	Gen J M Gavin	1	37,957	962	885	0	33,817	37,957	959	885	34,039
Ohio	Gen J M Gavin	2	38,668	980	901	0	34,450	38,668	977	901	34,676
Ohio	Gorge	25	1,711	43	0	0	1,485	821	21	0	717
Ohio	Gorge	26	1,917	49	0	0	1,662	920	23	0	804
Ohio	Hamilton	9	1,326	34	0	505	1,655	1,326	33	0	1,150
Ohio	J M Stuart	1	22,433	568	0	0	19,465	22,433	566	0	19,595
Ohio	J M Stuart	2	21,267	538	0	0	18,453	21,267	537	0	18,576
Ohio	J M Stuart	3	21,087	534	0	0	18,297	21,087	532	0	18,419
Ohio	J M Stuart	4	22,287	564	0	0	19,338	22,287	563	0	19,467
Ohio	Killen Station	2	19,344	490	0	0	16,784	19,344	488	0	16,897
Ohio	Kyger Creek	1	9,256	234	0	0	8,032	9,256	234	0	8,084
Ohio	Kyger Creek	2	8,909	226	0	0	7,730	8,908	225	0	7,782
Ohio	Kyger Creek	3	8,597	218	0	0	7,459	8,597	217	0	7,509
Ohio	Kyger Creek	4	8,981	227	0	0	7,794	8,981	227	0	7,844
Ohio	Kyger Creek	5	8,997	228	0	0	7,808	8,997	227	0	7,858
Ohio	Lake Road	6	0	0	0	1,340	1,340	0	0	0	0
Ohio	Lake Shore	18	5,720	145	0	1,027	5,990	5,720	144	0	4,997
Ohio	Lake Shore	91	53	1	0	0	47	53	1	0	47
Ohio	Lake Shore	92	95	2	0	0	84	95	2	0	83
Ohio	Lake Shore	93	74	2	0	0	65	74	2	0	65
Ohio	Lake Shore	94	122	3	0	0	108	122	3	0	107
Ohio	Miami Fort	6	5,464	138	127	0	4,868	5,464	138	127	4,900
Ohio	Miami Fort	7	18,485	468	430	0	16,469	18,485	467	430	16,576
Ohio	Miami Fort	8	20,834	527	0	0	18,079	20,834	526	0	18,196
Ohio	Miami Fort	5–1	159	4	4	0	142	159	4	4	143
Ohio	Miami Fort	5–2	159	4	4	0	142	159	4	4	143
Ohio	Muskingum River	1	7,140	181	166	0	6,361	7,140	180	166	6,403
Ohio	Muskingum River	2	6,800	172	158	0	6,059	6,800	172	158	6,097
Ohio	Muskingum River	3	6,698	170	156	0	5,966	6,698	169	156	6,007
Ohio	Muskingum River	4	5,653	143	132	0	5,037	5,653	143	132	5,069
Ohio	Muskingum River	5	19,423	492	452	0	17,306	19,423	490	452	17,416
Ohio	Niles	1	3,333	84	78	0	2,970	3,333	84	78	2,989
Ohio	Niles	2	4,367	111	102	0	3,891	4,367	110	102	3,917
Ohio	O H Hutchings	H–1	453	11	0	1,336	1,733	453	11	0	398
Ohio	O H Hutchings	H–2	353	9	0	1,362	1,668	353	9	0	308

TABLE 2. -- PHASE II ALLOWANCE ALLOCATIONS

State	Plant Name	Boiler [1]	Allowances for years 2000–2009					Allowances for years 2010 and thereafter			
			(A) [2] Unadjusted basic	(B) Special allowance reserve deduction	(C) Additional basic (§405(a)(3))	(D) Total Bonus	(E) [3] Total annual phase II	(F) [2] Unadjusted basic	(G) Special allowance reserve deduction	(H) Additional basic (§ 405(a)(3))	(I) [4] Total annual phase II
Ohio	O H Hutchings	H-3	667	17	0	1,019	1,596	667	17	0	582
Ohio	O H Hutchings	H-4	732	19	0	983	1,618	732	18	0	640
Ohio	O H Hutchings	H-5	566	15	0	1,116	1,626	566	15	0	512
Ohio	O H Hutchings	H-6	424	11	0	1,269	1,657	424	11	0	370
Ohio	Picway	9	2,368	60	55	0	2,110	2,368	60	55	2,123
Ohio	Poston	1	900	23	0	0	780	900	23	0	786
Ohio	Poston	2	836	21	0	0	725	836	21	0	730
Ohio	Poston	3	1,093	28	0	0	948	1,093	28	0	954
Ohio	R E Burger	1	1,409	36	0	0	1,223	676	17	0	591
Ohio	R E Burger	2	1,376	35	0	0	1,196	661	17	0	577
Ohio	R E Burger	3	1,423	36	0	0	1,235	683	17	0	597
Ohio	R E Burger	4	1,457	37	0	0	1,265	700	18	0	611
Ohio	R E Burger	5	1,479	37	34	0	1,319	1,479	37	34	1,328
Ohio	R E Burger	6	1,474	37	34	0	1,314	1,474	37	34	1,322
Ohio	R E Burger	7	5,174	131	120	0	4,609	5,174	131	120	4,639
Ohio	R E Burger	8	5,967	151	139	0	5,317	5,967	151	139	5,351
Ohio	Refuse & Coal	001	466	12	0	0	423	466	12	0	426
Ohio	Refuse & Coal	002	435	12	0	0	378	435	12	0	376
Ohio	Refuse & Coal	003	459	12	0	0	399	459	12	0	402
Ohio	Refuse & Coal	004	501	12	0	0	432	501	12	0	438
Ohio	Refuse & Coal	005	429	12	0	0	372	429	12	0	375
Ohio	Refuse & Coal	006	417	12	0	0	360	417	12	0	363
Ohio	Richard Gorsuch	1	7,030	178	0	0	6,096	7,030	178	0	6,140
Ohio	Richard Gorsuch	2	5,786	146	0	0	5,020	5,786	146	0	5,054
Ohio	Richard Gorsuch	3	7,862	198	0	0	6,822	7,862	198	0	6,866
Ohio	Richard Gorsuch	4	1,602	40	0	0	1,392	1,602	40	0	1,400
Ohio	Tidd	**1	818	21	0	0	708	818	21	0	712
Ohio	Toronto	9	2,140	54	0	0	1,859	1,027	26	0	897
Ohio	Toronto	10	3,820	97	0	0	3,314	1,834	47	0	1,602
Ohio	Toronto	11	4,128	105	0	0	3,581	1,982	49	0	1,732
Ohio	W H Sammis	1	7,130	180	0	0	6,187	7,130	180	0	6,228
Ohio	W H Sammis	2	6,253	158	0	0	5,426	6,253	158	0	5,462
Ohio	W H Sammis	3	7,129	180	0	0	6,186	7,129	180	0	6,227
Ohio	W H Sammis	4	6,317	160	0	0	5,481	6,317	159	0	5,518
Ohio	W H Sammis	5	11,600	294	270	0	10,335	11,600	293	270	10,402
Ohio	W H Sammis	6	22,210	562	517	0	19,790	22,210	561	517	19,916
Ohio	W H Sammis	7	20,747	525	483	0	18,486	20,747	524	483	18,605
Ohio	W H Zimmer	1	18,458	467	0	0	16,017	18,458	466	0	16,122
Ohio	Walter C Beckjord	1	539	14	0	1,363	1,830	539	14	0	470
Ohio	Walter C Beckjord	2	812	21	0	1,148	1,653	812	21	0	709
Ohio	Walter C Beckjord	3	1,226	31	0	1,455	2,521	1,226	31	0	1,073
Ohio	Walter C Beckjord	4	2,442	62	0	1,125	3,245	2,442	62	0	2,133
Ohio	Walter C Beckjord	5	4,294	109	100	0	3,825	4,294	108	100	3,851
Ohio	Walter C Beckjord	6	11,048	280	257	0	9,843	11,048	279	257	9,907
Ohio	Woodsdale	**GT1	337	9	0	0	292	337	9	0	294
Ohio	Woodsdale	**GT2	337	9	0	0	292	337	9	0	294
Ohio	Woodsdale	**GT3	337	9	0	0	292	337	9	0	294

TABLE 2. – – PHASE II ALLOWANCE ALLOCATIONS

State	Plant Name	Boiler [1]	Allowances for years 2000–2009					Allowances for years 2010 and thereafter			
			(A) [2]	(B)	(C)	(D)	(E) [3]	(F) [2]	(G)	(H)	(I) [4]
			Unadjusted basic	Special allowance reserve deduction	Additional basic (§405(a)(3))	Total Bonus	Total annual phase II	Unadjusted basic	Special allowance reserve deduction	Additional basic (§ 405(a)(3))	Total annual phase II
Ohio	Woodsdale	**GT4	337	9	0	0	292	337	9	0	294
Ohio	Woodsdale	**GT5	337	9	0	0	292	337	9	0	294
Ohio	Woodsdale	**GT8	0	0	0	0	0	0	0	0	0
Ohio	Woodsdale	**GT9	0	0	0	0	0	0	0	0	0
Ohio	Woodsdale	**GT10	0	0	0	0	0	0	0	0	0
Ohio	Woodsdale	**GT11	0	0	0	0	0	0	0	0	0
Ohio	Woodsdale	**GT12	0	0	0	0	0	0	0	0	0
Oklahoma	Anadarko	3	0	0	0	0	0	1	0	0	1
Oklahoma	Arbuckle	ARB	1	0	0	44	45	56	1	0	49
Oklahoma	Comanche	7251	2	0	0	330	332	164	4	0	143
Oklahoma	Comanche	7252	2	0	0	0	2	164	4	0	143
Oklahoma	Conoco	**1	253	6	0	0	220	253	6	0	221
Oklahoma	Conoco	**2	253	6	0	0	220	253	6	0	221
Oklahoma	Grda	1	15,939	403	0	694	14,525	15,939	402	0	13,923
Oklahoma	Grda	2	9,550	242	0	38	8,325	9,550	241	0	8,342
Oklahoma	Horseshoe Lake	6	4	0	0	169	173	163	5	0	156
Oklahoma	Horseshoe Lake	7	5	0	0	226	231	236	6	0	206
Oklahoma	Horseshoe Lake	8	6	0	0	306	313	406	10	0	357
Oklahoma	Hugo	1	13,090	331	0	421	11,780	13,090	330	0	11,434
Oklahoma	Inola	**1	0	0	0	0	0	0	0	0	0
Oklahoma	Mooreland	1	0	0	0	0	0	1	0	0	1
Oklahoma	Mooreland	2	1	0	0	43	44	65	2	0	56
Oklahoma	Mooreland	3	0	0	0	6	6	19	0	0	17
Oklahoma	Muskogee	3	3	0	0	138	141	156	4	0	136
Oklahoma	Muskogee	4	10,130	256	0	446	9,236	10,130	256	0	8,848
Oklahoma	Muskogee	5	8,937	226	0	456	8,211	8,937	226	0	7,806
Oklahoma	Muskogee	6	15,892	402	0	516	14,307	15,892	401	0	13,861
Oklahoma	Mustang	1	1	0	0	31	32	30	1	0	26
Oklahoma	Mustang	2	1	0	0	25	26	29	1	0	25
Oklahoma	Mustang	3	1	0	0	0	1	92	2	0	81
Oklahoma	Mustang	4	5	0	0	158	163	218	6	0	190
Oklahoma	Na 1 – – 5030	**1	0	0	0	0	0	0	0	0	0
Oklahoma	Na 1 – – 5030	**2	0	0	0	0	0	0	0	0	0
Oklahoma	Na 1 – – 5030	**3	0	0	0	0	0	0	0	0	0
Oklahoma	Northeastern	3301	1,878	48	0	99	1,727	1,878	47	0	1,641
Oklahoma	Northeastern	3302	6,363	161	0	366	5,888	6,363	161	0	5,558
Oklahoma	Northeastern	3313	15,113	383	0	608	13,721	15,113	382	0	13,200
Oklahoma	Northeastern	3314	16,354	414	0	572	14,762	16,354	413	0	14,285
Oklahoma	Ponca	2	0	0	0	0	0	0	0	0	0
Oklahoma	Riverside	1501	6	0	0	514	519	478	12	0	416
Oklahoma	Riverside	1502	5	0	0	260	265	362	10	0	333
Oklahoma	Seminole	1	14	0	0	398	412	437	11	0	382
Oklahoma	Seminole	2	6	0	0	447	452	482	12	0	430
Oklahoma	Seminole	3	44	1	0	455	494	577	15	0	504
Oklahoma	Sooner	1	11,336	287	0	550	10,387	11,336	286	0	9,902
Oklahoma	Sooner	2	10,781	273	0	545	9,899	10,781	272	0	9,417
Oklahoma	Southwestern	8002	0	0	0	15	15	20	1	0	17

TABLE 2. -- PHASE II ALLOWANCE ALLOCATIONS

State	Plant Name	Boiler [1]	Allowances for years 2000–2009					Allowances for years 2010 and thereafter			
			(A) [2] Unadjusted basic	(B) Special allowance reserve deduction	(C) Additional basic (§405(a)(3))	(D) Total Bonus	(E) [3] Total annual phase II	(F) [2] Unadjusted basic	(G) Special allowance reserve deduction	(H) Additional basic (§ 405(a)(3))	(I) [4] Total annual phase II
Oklahoma	Southwestern	6003	3	0	0	161	164	166	5	0	164
Oklahoma	Southwestern	601N	0	0	0	3	3	5	0	0	4
Oklahoma	Southwestern	601S	0	0	0	0	0	3	0	0	3
Oklahoma	Tulsa	1402	0	0	0	96	96	51	1	0	45
Oklahoma	Tulsa	1403	0	0	0	4	4	3	0	0	3
Oklahoma	Tulsa	1404	1	0	0	57	58	73	2	0	64
Oregon	Boardman	1SG	15,286	387	0	0	13,265	15,286	386	0	13,352
Pennsylvania	Armstrong	1	6,918	175	161	0	6,164	6,918	175	161	6,203
Pennsylvania	Armstrong	2	7,407	188	172	0	6,598	7,407	187	172	6,642
Pennsylvania	Bruce Mansfield	1	14,532	368	0	0	12,609	14,532	367	0	12,693
Pennsylvania	Bruce Mansfield	2	16,077	407	0	0	13,950	16,077	406	0	14,043
Pennsylvania	Bruce Mansfield	3	16,538	419	0	0	14,350	16,538	418	0	14,445
Pennsylvania	Brunner Island	1	13,326	337	310	0	11,874	13,326	336	310	11,950
Pennsylvania	Brunner Island	2	14,830	376	348	0	13,303	14,830	377	348	13,389
Pennsylvania	Brunner Island	3	25,836	654	601	0	23,018	25,836	652	601	23,168
Pennsylvania	Cheswick	1	18,800	476	436	0	16,751	18,800	475	436	16,859
Pennsylvania	Conemaugh	1	28,874	732	672	0	25,723	28,874	730	672	25,891
Pennsylvania	Conemaugh	2	32,005	811	745	0	28,513	32,005	809	745	28,700
Pennsylvania	Cromby	1	2,516	64	0	0	2,184	2,516	64	0	2,199
Pennsylvania	Cromby	2	2,411	61	0	0	2,093	2,411	61	0	2,106
Pennsylvania	Delaware	71	850	22	0	0	737	850	21	0	743
Pennsylvania	Delaware	81	614	16	0	0	532	614	16	0	536
Pennsylvania	Eddystone	1	2,920	74	0	290	2,823	2,920	74	0	2,550
Pennsylvania	Eddystone	2	2,856	72	0	508	2,865	2,856	72	0	2,496
Pennsylvania	Eddystone	3	2,166	55	0	0	1,879	2,166	55	0	1,892
Pennsylvania	Eddystone	4	2,298	58	0	0	1,994	2,298	58	0	2,007
Pennsylvania	Elrama	1	812	21	0	939	1,844	812	21	0	709
Pennsylvania	Elrama	2	755	19	0	955	1,810	755	19	0	660
Pennsylvania	Elrama	3	1,743	44	0	42	1,555	1,743	44	0	1,522
Pennsylvania	Elrama	4	2,948	75	0	0	2,556	2,948	74	0	2,575
Pennsylvania	F R Phillips	1	164	3	0	518	662	164	3	0	144
Pennsylvania	F R Phillips	2	125	3	0	394	504	125	3	0	109
Pennsylvania	F R Phillips	3	290	8	0	911	1,162	290	8	0	252
Pennsylvania	F R Phillips	4	278	7	0	870	1,111	278	7	0	242
Pennsylvania	F R Phillips	5	281	7	0	884	1,130	281	7	0	245
Pennsylvania	F R Phillips	6	1,265	32	0	915	2,013	1,265	32	0	1,105
Pennsylvania	Front Street	7	337	9	0	0	292	337	9	0	294
Pennsylvania	Front Street	8	337	9	0	0	292	337	9	0	294
Pennsylvania	Front Street	9	1,344	36	0	0	1,164	1,344	32	0	1,176
Pennsylvania	Front Street	10	1,344	36	0	0	1,164	1,344	32	0	1,176
Pennsylvania	Hatfield'S Ferry	1	16,157	460	423	0	16,176	16,157	458	423	16,283
Pennsylvania	Hatfield'S Ferry	2	17,915	453	417	0	15,863	17,915	452	417	16,065
Pennsylvania	Hatfield'S Ferry	3	19,329	489	450	0	17,222	19,329	488	450	17,333
Pennsylvania	Holtwood	17	4,061	103	0	0	3,542	4,061	103	0	3,565
Pennsylvania	Homer City	1	20,293	514	0	0	17,608	20,293	512	0	17,726
Pennsylvania	Homer City	2	17,813	446	0	901	16,184	17,813	445	0	15,384
Pennsylvania	Homer City	3	31,573	800	0	0	27,392	31,573	798	0	27,576

TABLE 2. -- PHASE II ALLOWANCE ALLOCATIONS

State	Plant Name	Boiler [1]	Allowances for years 2000–2009					Allowances for years 2010 and thereafter			
			(A) [2]	(B)	(C)	(D)	(E) [3]	(F) [2]	(G)	(H)	(I) [4]
			Unadjusted basic	Special allowance reserve deduction	Additional basic (§405(a)(3))	Total Bonus	Total annual phase II	Unadjusted basic	Special allowance reserve deduction	Additional basic (§ 405(a)(3))	Total annual phase II
Pennsylvania	Hunlock Power	6	2,579	65	0	0	2,238	2,579	65	0	2,253
Pennsylvania	Keystone	1	32,247	817	0	0	27,978	32,247	815	0	28,167
Pennsylvania	Keystone	2	34,335	870	0	0	29,789	34,335	868	0	29,990
Pennsylvania	Marcus Hook Refinery	1	0	0	0	0	0	0	0	0	0
Pennsylvania	Martins Creek	1	6,075	154	141	0	5,412	6,075	153	141	5,448
Pennsylvania	Martins Creek	2	6,154	156	143	0	5,483	6,154	155	143	5,519
Pennsylvania	Martins Creek	3	15,064	381	0	0	13,072	15,064	380	0	13,158
Pennsylvania	Martins Creek	4	13,857	351	0	0	12,024	13,857	350	0	12,103
Pennsylvania	Mitchell	1	0	0	0	0	0	0	0	0	0
Pennsylvania	Mitchell	2	1	0	0	0	1	1	0	0	1
Pennsylvania	Mitchell	3	0	0	0	0	0	0	0	0	0
Pennsylvania	Mitchell	33	3,540	90	0	431	3,502	3,540	89	0	3,092
Pennsylvania	Montour	1	27,398	693	0	215	23,987	27,398	692	0	23,931
Pennsylvania	Montour	2	28,204	714	0	0	24,470	28,204	712	0	24,635
Pennsylvania	New Castle	1	1,478	37	0	0	1,282	709	18	0	619
Pennsylvania	New Castle	2	1,643	41	0	0	1,426	789	20	0	689
Pennsylvania	New Castle	3	3,248	82	0	0	2,819	3,248	82	0	2,837
Pennsylvania	New Castle	4	2,973	75	0	215	2,795	2,973	75	0	2,597
Pennsylvania	New Castle	5	5,159	131	0	0	4,478	5,159	130	0	4,508
Pennsylvania	Portland	1	2,850	72	66	0	2,539	2,850	72	66	2,555
Pennsylvania	Portland	2	4,913	124	114	0	4,377	4,913	124	114	4,405
Pennsylvania	Richmond	63	0	0	0	0	0	0	0	0	0
Pennsylvania	Richmond	64	0	0	0	0	0	0	0	0	0
Pennsylvania	Schuylkill	1	654	17	0	0	587	654	17	0	571
Pennsylvania	Seward	12	1,253	32	0	0	1,087	1,253	32	0	1,094
Pennsylvania	Seward	14	1,253	32	0	0	1,087	1,253	32	0	1,094
Pennsylvania	Seward	15	5,715	145	0	0	4,959	5,715	144	0	4,992
Pennsylvania	Shawville	1	4,930	125	115	0	4,393	4,930	124	115	4,422
Pennsylvania	Shawville	2	4,960	126	115	0	4,419	4,960	125	115	4,448
Pennsylvania	Shawville	3	6,803	172	158	0	6,061	6,803	172	158	6,100
Pennsylvania	Shawville	4	6,757	171	157	0	6,020	6,757	171	157	6,059
Pennsylvania	Southwark	11	0	0	0	0	0	0	0	0	0
Pennsylvania	Southwark	12	0	0	0	0	0	0	0	0	0
Pennsylvania	Southwark	21	0	0	0	0	0	0	0	0	0
Pennsylvania	Southwark	22	0	0	0	0	0	0	0	0	0
Pennsylvania	Springdale	77	0	0	0	0	0	0	0	0	0
Pennsylvania	Springdale	86	0	0	0	0	0	0	0	0	0
Pennsylvania	Sunbury	3	4,554	115	43	0	3,995	4,554	115	43	4,020
Pennsylvania	Sunbury	4	5,844	148	136	0	5,206	5,844	148	136	5,240
Pennsylvania	Sunbury	1A	2,077	52	0	0	1,802	2,077	52	0	1,815
Pennsylvania	Sunbury	1B	2,076	52	0	0	1,801	2,076	52	0	1,814
Pennsylvania	Sunbury	2A	2,077	52	0	0	1,802	2,077	52	0	1,815
Pennsylvania	Sunbury	2B	2,077	52	0	0	1,802	2,077	52	0	1,815
Pennsylvania	Titus	1	2,169	55	0	252	2,134	2,169	55	0	1,894
Pennsylvania	Titus	2	2,486	63	0	97	2,253	2,486	63	0	2,171
Pennsylvania	Titus	3	2,275	58	0	204	2,177	2,275	57	0	1,988
Pennsylvania	Warren	1	823	21	0	0	714	823	21	0	719

TABLE 2. -- PHASE II ALLOWANCE ALLOCATIONS

State	Plant Name	Boiler [1]	Allowances for years 2000–2009					Allowances for years 2010 and thereafter			
			(A) [2] Unadjusted basic	(B) Special allowance reserve deduction	(C) Additional basic (§405(a)(3))	(D) Total Bonus	(E) [3] Total annual phase II	(F) [2] Unadjusted basic	(G) Special allowance reserve deduction	(H) Additional basic (§ 405(a)(3))	(I) [4] Total annual phase II
Pennsylvania	Warren	2	823	21	0	0	714	823	21	0	719
Pennsylvania	Warren	3	845	21	0	0	733	845	21	0	738
Pennsylvania	Warren	4	845	21	0	0	733	845	21	0	738
Pennsylvania	Williamsburg	11	1,068	27	0	0	927	1,068	27	0	933
Rhode Island	Manchester Street	6	749	19	0	37	687	749	19	0	654
Rhode Island	Manchester Street	7	497	13	0	24	454	497	13	0	434
Rhode Island	Manchester Street	12	553	14	0	28	507	553	14	0	483
Rhode Island	South Street	121	1,195	30	0	41	1,080	1,195	30	0	1,044
Rhode Island	South Street	122	1,083	28	0	0	939	1,083	28	0	946
South Carolina	Canadys Steam	CAN1	3,350	85	0	316	3,223	3,350	85	0	2,926
South Carolina	Canadys Steam	CAN2	2,634	67	0	674	2,960	2,634	66	0	2,301
South Carolina	Canadys Steam	CAN3	3,542	90	0	1,124	4,197	3,542	89	0	3,094
South Carolina	Cross	1	6,401	162	0	0	5,555	6,401	162	0	5,591
South Carolina	Cross	2	10,216	259	0	0	8,864	10,215	258	0	8,923
South Carolina	Dolphus M Grainger	1	3,558	90	0	0	3,087	3,558	90	0	3,108
South Carolina	Dolphus M Grainger	2	316	8	0	0	274	316	8	0	276
South Carolina	H B Robinson	1	3,317	84	0	912	3,790	3,317	84	0	2,897
South Carolina	Hagood	**4	1,084	27	0	0	942	1,084	27	0	947
South Carolina	Hagood	HAG1	3	0	0	0	3	3	0	0	3
South Carolina	Hagood	HAG2	2	0	0	449	451	2	0	0	2
South Carolina	Hagood	HAG3	7	0	0	781	787	7	0	0	6
South Carolina	Jefferies	1	0	0	0	0	0	0	0	0	0
South Carolina	Jefferies	2	1	0	0	0	1	1	0	0	1
South Carolina	Jefferies	3	3,854	98	0	514	3,857	3,854	97	0	3,367
South Carolina	Jefferies	4	3,599	91	0	593	3,716	3,599	91	0	3,143
South Carolina	Mcmeekin	MCM1	4,662	118	0	0	4,045	4,662	118	0	4,072
South Carolina	Mcmeekin	MCM2	4,614	117	0	0	4,004	4,614	116	0	4,031
South Carolina	Ns 4 -- 7210	**ST1	0	0	0	0	0	0	0	0	0
South Carolina	Urquhart	URQ1	2,509	64	0	0	2,178	2,509	63	0	2,192
South Carolina	Urquhart	URQ2	1,922	49	0	245	1,912	1,922	49	0	1,678
South Carolina	Urquhart	URQ3	3,329	84	0	0	2,889	3,329	84	0	2,908
South Carolina	W S Lee	1	1,027	26	0	1,234	2,125	1,027	26	0	897
South Carolina	W S Lee	2	1,292	33	0	1,147	2,267	1,292	33	0	1,126
South Carolina	W S Lee	3	2,022	51	0	1,674	3,429	2,022	51	0	1,766
South Carolina	Wateree	WAT1	11,104	281	0	0	9,635	11,104	280	0	9,699
South Carolina	Wateree	WAT2	10,292	261	0	263	9,193	10,292	260	0	8,990
South Carolina	Williams	WIL1	18,079	458	0	0	15,687	18,079	456	0	15,792
South Carolina	Winyah	1	8,655	219	0	0	7,510	8,655	218	0	7,560
South Carolina	Winyah	2	5,849	148	0	1,115	6,190	5,849	148	0	5,109
South Carolina	Winyah	3	2,862	72	0	1,106	3,590	2,862	72	0	2,500
South Carolina	Winyah	4	3,916	99	0	0	3,398	3,916	99	0	3,420
South Dakota	Big Stone	1	14,799	375	0	764	13,605	14,799	374	0	12,926
South Dakota	Huron	**2A	91	2	0	0	80	91	2	0	80
South Dakota	Huron	**2B	117	3	0	0	101	117	3	0	102
South Dakota	Mobile	**2	20	1	0	0	17	20	1	0	17
South Dakota	Pathfinder	11	12	0	0	0	11	12	0	0	11
South Dakota	Pathfinder	12	2	0	0	0	2	2	0	0	2

TABLE 2. — PHASE II ALLOWANCE ALLOCATIONS

State	Plant Name	Boiler [1]	Allowances for years 2000–2009					Allowances for years 2010 and thereafter			
			(A) [2]	(B)	(C)	(D)	(E) [3]	(F) [2]	(G)	(H)	(I) [4]
			Unadjusted basic	Special allowance reserve deduction	Additional basic (§405(a)(3))	Total Bonus	Total annual phase II	Unadjusted basic	Special allowance reserve deduction	Additional basic (§ 405(a)(3))	Total annual phase II
South Dakota	Pathfinder	13	2	0	0	0	2	2	0	0	2
Tennessee	Allen	1	7,355	186	171	0	6,554	7,355	186	171	6,595
Tennessee	Allen	2	8,049	204	187	0	7,171	8,049	203	187	7,218
Tennessee	Allen	3	7,520	190	175	0	6,701	7,520	190	175	6,743
Tennessee	Bull Run	1	28,623	725	0	0	24,834	28,623	724	0	25,000
Tennessee	Cumberland	1	41,616	1,054	970	0	37,077	41,616	1,052	970	37,320
Tennessee	Cumberland	2	45,523	1,153	1,061	0	40,559	45,523	1,150	1,061	40,824
Tennessee	Gallatin	1	8,465	214	197	0	7,542	8,465	214	197	7,591
Tennessee	Gallatin	2	8,308	210	193	0	7,403	8,308	210	193	7,450
Tennessee	Gallatin	3	9,611	243	224	0	8,564	9,611	243	224	8,619
Tennessee	Gallatin	4	10,204	258	238	0	9,092	10,204	258	238	9,150
Tennessee	John Sevier	1	7,266	184	0	0	6,306	7,266	183	0	6,349
Tennessee	John Sevier	2	7,265	184	0	0	6,304	7,265	183	0	6,346
Tennessee	John Sevier	3	7,450	188	0	0	6,463	7,450	188	0	6,507
Tennessee	John Sevier	4	7,620	193	0	0	6,612	7,620	192	0	6,656
Tennessee	Johnsonville	1	3,738	95	87	0	3,330	3,738	94	87	3,352
Tennessee	Johnsonville	2	3,857	98	90	0	3,436	3,857	97	90	3,459
Tennessee	Johnsonville	3	4,037	102	94	0	3,596	4,037	102	94	3,620
Tennessee	Johnsonville	4	3,833	97	89	0	3,415	3,833	97	89	3,437
Tennessee	Johnsonville	5	3,954	100	92	0	3,523	3,954	100	92	3,546
Tennessee	Johnsonville	6	3,789	96	88	0	3,375	3,789	96	88	3,397
Tennessee	Johnsonville	7	4,309	109	100	0	3,839	4,309	109	100	3,864
Tennessee	Johnsonville	8	4,176	106	97	0	3,722	4,176	105	97	3,747
Tennessee	Johnsonville	9	3,397	86	79	0	3,027	3,397	86	79	3,046
Tennessee	Johnsonville	10	3,625	92	84	0	3,230	3,625	92	84	3,250
Tennessee	Kingston	1	4,743	120	0	0	4,116	4,743	120	0	4,143
Tennessee	Kingston	2	4,524	115	0	33	3,958	4,524	114	0	3,952
Tennessee	Kingston	3	5,430	137	0	0	4,713	5,430	137	0	4,743
Tennessee	Kingston	4	5,761	146	0	0	4,999	5,761	145	0	5,032
Tennessee	Kingston	5	7,079	179	0	0	6,142	7,079	179	0	6,183
Tennessee	Kingston	6	7,253	184	0	0	6,293	7,253	183	0	6,335
Tennessee	Kingston	7	7,072	179	0	0	6,137	7,072	179	0	6,177
Tennessee	Kingston	8	6,609	167	0	0	5,736	6,609	167	0	5,773
Tennessee	Kingston	9	7,319	185	0	0	6,351	7,319	185	0	6,393
Tennessee	Watts Bar	A	0	0	0	0	0	0	0	0	0
Tennessee	Watts Bar	B	0	0	0	0	0	0	0	0	0
Tennessee	Watts Bar	C	0	0	0	0	0	0	0	0	0
Tennessee	Watts Bar	D	0	0	0	0	0	0	0	0	0
Texas	Barney M Davis	1	29	1	0	470	495	470	12	0	410
Texas	Barney M Davis	2	26	1	0	376	398	438	11	0	363
Texas	Big Brown	1	22,998	582	0	858	20,813	22,998	581	0	20,068
Texas	Big Brown	2	21,999	557	0	625	19,714	21,999	555	0	19,216
Texas	Bryan	6	14	0	0	6	19	26	1	0	22
Texas	C E Newman	BW5	0	0	0	3	3	4	0	0	4
Texas	Cedar Bayou	CBY1	16	0	0	799	813	801	20	0	700
Texas	Cedar Bayou	CBY2	6	0	0	916	921	978	25	0	854
Texas	Cedar Bayou	CBY3	17	0	0	710	725	808	20	0	704

TABLE 2. -- PHASE II ALLOWANCE ALLOCATIONS

State	Plant Name	Boiler [1]	Allowances for years 2000–2009					Allowances for years 2010 and thereafter			
			(A) [2] Unadjusted basic	(B) Special allowance reserve deduction	(C) Additional basic (§405(a)(3))	(D) Total Bonus	(E) [3] Total annual phase II	(F) [2] Unadjusted basic	(G) Special allowance reserve deduction	(H) Additional basic (§ 405(a)(3))	(I) [4] Total annual phase II
Texas	Coleto Creek	1	15,750	399	0	938	14,604	15,750	398	0	13,757
Texas	Coleto Creek	**2	0	0	0	0	0	0	0	0	0
Texas	Collin	1	54	1	0	44	92	107	3	0	93
Texas	Concho	2	0	0	0	4	4	0	0	0	0
Texas	Concho	4	0	0	0	0	0	0	0	0	0
Texas	Concho	5	0	0	0	0	0	0	0	0	0
Texas	Concho	6	0	0	0	0	0	0	0	0	0
Texas	Concho	7	8	0	0	0	7	14	0	0	13
Texas	Dallas	3	7	0	0	21	27	27	1	0	23
Texas	Dallas	9	8	0	0	19	26	29	1	0	25
Texas	Dansby	1	34	1	0	64	94	121	3	0	106
Texas	Decker Creek	1	2	0	0	126	128	171	4	0	150
Texas	Decker Creek	2	2	0	0	193	195	206	5	0	180
Texas	Decordova	1	29	1	0	992	1,017	1,004	25	0	877
Texas	Deepwater	DWP1	0	0	0	0	0	0	0	0	0
Texas	Deepwater	DWP2	0	0	0	0	0	0	0	0	0
Texas	Deepwater	DWP3	0	0	0	0	0	0	0	0	0
Texas	Deepwater	DWP4	0	0	0	0	0	0	0	0	0
Texas	Deepwater	DWP5	0	0	0	0	0	0	0	0	0
Texas	Deepwater	DWP6	0	0	0	0	0	0	0	0	0
Texas	Deepwater	DWP9	1	0	0	27	28	42	1	0	37
Texas	E S Joslin	1	2	0	0	257	259	239	6	0	209
Texas	Eagle Mountain	1	7	0	0	46	52	49	1	0	43
Texas	Eagle Mountain	2	24	1	0	119	140	132	3	0	116
Texas	Eagle Mountain	3	2	0	0	97	99	124	3	0	108
Texas	Forest Grove	**1	0	0	0	0	0	0	0	0	0
Texas	Fort Phantom	1	8	0	0	119	126	147	4	0	128
Texas	Fort Phantom	2	37	1	0	155	187	220	6	0	192
Texas	Generic Stat	**1	0	0	0	0	0	0	0	0	0
Texas	Generic Stat	**2	0	0	0	0	0	0	0	0	0
Texas	Gibbons Creek	1	15,861	401	0	534	14,298	15,861	400	0	13,854
Texas	Graham	1	4	0	0	231	235	222	6	0	194
Texas	Graham	2	44	1	0	457	498	463	12	0	404
Texas	Greens Bayou	GBY1	0	0	0	1	1	3	0	0	3
Texas	Greens Bayou	GBY2	0	0	0	2	2	3	0	0	3
Texas	Greens Bayou	GBY3	0	0	0	15	15	7	0	0	6
Texas	Greens Bayou	GBY4	0	0	0	19	19	9	0	0	8
Texas	Greens Bayou	GBY5	31	1	0	324	351	352	9	0	307
Texas	Gt 98	**1	0	0	0	0	0	0	0	0	0
Texas	Gt 98	**2	0	0	0	0	0	0	0	0	0
Texas	Gt 99	**1	0	0	0	0	0	0	0	0	0
Texas	Gt 99	**2	0	0	0	0	0	0	0	0	0
Texas	Gt 99	**3	0	0	0	0	0	0	0	0	0
Texas	Handley	2	0	0	0	21	21	17	0	0	15
Texas	Handley	3	21	1	0	404	422	448	11	0	382
Texas	Handley	4	16	0	0	104	118	128	3	0	112
Texas	Handley	5	22	1	0	117	138	145	4	0	126

TABLE 2. -- PHASE II ALLOWANCE ALLOCATIONS

State	Plant Name	Boiler [1]	Allowances for years 2000–2009					Allowances for years 2010 and thereafter			
			(A) [2] Unadjusted basic	(B) Special allowance reserve deduction	(C) Additional basic (§405(a)(3))	(D) Total Bonus	(E) [3] Total annual phase II	(F) [2] Unadjusted basic	(G) Special allowance reserve deduction	(H) Additional basic (§ 405(a)(3))	(I) [4] Total annual phase II
Texas	Handley	1A	0	0	0	7	7	3	0	0	3
Texas	Handley	1B	0	0	0	0	0	3	0	0	3
Texas	Harrington Station	061B	8,796	223	0	536	8,167	8,796	222	0	7,683
Texas	Harrington Station	062B	9,350	237	0	537	8,651	9,350	236	0	8,167
Texas	Harrington Station	063B	9,971	252	0	542	9,195	9,971	252	0	8,709
Texas	Hiram Clarke	HOC1	0	0	0	0	0	0	0	0	0
Texas	Hiram Clarke	HOC2	0	0	0	0	0	0	0	0	0
Texas	Hiram Clarke	HOC3	0	0	0	3	3	2	0	0	2
Texas	Hiram Clarke	HOC4	0	0	0	2	2	1	0	0	1
Texas	Holly Ave	1	1	0	0	58	59	81	2	0	71
Texas	Holly Ave	2	1	0	0	70	71	87	2	0	76
Texas	Holly Street	1	0	0	0	49	49	19	0	0	17
Texas	Holly Street	2	0	0	0	31	31	21	1	0	18
Texas	Holly Street	3	1	0	0	67	68	75	2	0	65
Texas	Holly Street	4	2	0	0	41	43	93	2	0	82
Texas	J K Spruce	**1	7,647	194	0	0	8,635	7,647	193	0	8,679
Texas	J K Spruce	**2	0	0	0	0	0	0	0	0	0
Texas	J L Bates	1	1	0	0	47	48	52	1	0	46
Texas	J L Bates	2	2	0	0	122	124	115	3	0	100
Texas	J T Deely	1	14,339	363	0	568	13,029	14,339	362	0	12,525
Texas	J T Deely	2	14,958	379	0	615	13,594	14,958	378	0	13,065
Texas	Jones Station	151B	2	0	0	123	125	84	2	0	73
Texas	Jones Station	152B	4	0	0	89	93	77	2	0	87
Texas	Knox Lee	2	0	0	0	0	0	0	0	0	0
Texas	Knox Lee	3	0	0	0	5	5	2	0	0	2
Texas	Knox Lee	4	0	0	0	29	29	14	0	0	13
Texas	Knox Lee	5	2	0	0	249	251	170	4	0	149
Texas	La Palma	7	2	0	0	176	178	174	4	0	152
Texas	Lake Creek	1	1	0	0	38	39	33	1	0	29
Texas	Lake Creek	2	4	0	0	187	191	161	4	0	141
Texas	Lake Hubbard	1	25	1	0	148	170	229	6	0	200
Texas	Lake Hubbard	2	93	2	0	521	603	660	17	0	576
Texas	Laredo	1	0	0	0	15	15	16	0	0	16
Texas	Laredo	2	0	0	0	14	14	16	0	0	14
Texas	Laredo	3	6	0	0	60	65	132	3	0	116
Texas	Leon Creek	3	0	0	0	2	2	2	0	0	2
Texas	Leon Creek	4	0	0	0	10	10	9	0	0	8
Texas	Lewis Creek	1	4	0	0	313	317	301	8	0	263
Texas	Lewis Creek	2	4	0	0	267	271	293	7	0	256
Texas	Limestone	LIM1	27,065	685	0	102	23,565	27,065	683	0	23,641
Texas	Limestone	LIM2	16,178	409	0	0	14,038	16,178	408	0	14,131
Texas	Lon C Hill	1	0	0	0	9	9	8	0	0	7
Texas	Lon C Hill	2	0	0	0	10	10	8	0	0	7
Texas	Lon C Hill	3	2	0	0	177	179	104	3	0	90
Texas	Lon C Hill	4	4	0	0	193	197	272	7	0	237
Texas	Lone Star	1	0	0	0	0	0	11	0	0	10
Texas	Malakoff	**1	1,758	45	0	0	1,526	1,758	44	0	1,537

TABLE 2. -- PHASE II ALLOWANCE ALLOCATIONS

State	Plant Name	Boiler [1]	Allowances for years 2000-2009					Allowances for years 2010 and thereafter			
			(A) [2] Unadjusted basic	(B) Special allowance reserve deduction	(C) Additional basic (§405(a)(3))	(D) Total Bonus	(E) [3] Total annual phase II	(F) [2] Unadjusted basic	(G) Special allowance reserve deduction	(H) Additional basic (§ 405(a)(3))	(I) [4] Total annual phase II
Texas	Malakoff	**2	0	0	0	0	0	0	0	0	0
Texas	Martin Lake	1	36,736	931	0	1,084	32,956	36,736	926	0	32,066
Texas	Martin Lake	2	35,617	903	0	1,096	32,000	35,617	900	0	31,110
Texas	Martin Lake	3	36,994	937	0	1,064	33,161	36,994	935	0	32,313
Texas	Mission Road	3	0	0	0	3	3	9	0	0	8
Texas	Monticello	1	25,964	657	0	919	23,447	25,964	655	0	22,679
Texas	Monticello	2	25,166	637	0	915	22,751	25,166	635	0	21,962
Texas	Monticello	3	38,836	984	0	1,249	34,943	38,836	981	0	33,922
Texas	Morgan Creek	3	0	0	0	8	8	7	0	0	6
Texas	Morgan Creek	4	13	0	0	60	72	64	2	0	56
Texas	Morgan Creek	5	17	0	0	139	154	167	5	0	163
Texas	Morgan Creek	6	218	6	0	846	834	888	22	0	774
Texas	Mountain Creek	2	1	0	0	3	4	3	0	0	3
Texas	Mountain Creek	6	22	1	0	44	63	64	2	0	73
Texas	Mountain Creek	7	4	0	0	58	62	67	2	0	58
Texas	Mountain Creek	8	59	1	0	475	527	610	15	0	533
Texas	Mountain Creek	3A	2	0	0	9	11	5	0	0	4
Texas	Mountain Creek	3B	2	0	0	0	2	5	0	0	4
Texas	Na 1 -- 7218	**1	0	0	0	0	0	0	0	0	0
Texas	Na 1 -- 7218	**2	0	0	0	0	0	0	0	0	0
Texas	Na 1 -- 7219	**1	0	0	0	0	0	0	0	0	0
Texas	Na 1 -- 7219	**2	0	0	0	0	0	0	0	0	0
Texas	Na 2 -- 4274	**NA1	0	0	0	0	0	0	0	0	0
Texas	Neches	11	0	0	0	0	0	0	0	0	0
Texas	Neches	13	0	0	0	0	0	0	0	0	0
Texas	Neches	15	0	0	0	0	0	0	0	0	0
Texas	Neches	18	0	0	0	0	0	0	0	0	0
Texas	Newman	1	0	0	0	14	14	21	1	0	18
Texas	Newman	2	1	0	0	28	29	47	1	0	41
Texas	Newman	3	1	0	0	87	88	107	3	0	93
Texas	Newman	**4	2	0	0	97	99	157	4	0	137
Texas	Nichols Station	141B	1	0	0	76	77	93	2	0	82
Texas	Nichols Station	142B	1	0	0	85	86	87	2	0	76
Texas	Nichols Station	143B	0	0	0	50	50	36	1	0	31
Texas	North Lake	1	45	1	0	91	131	148	4	0	129
Texas	North Lake	2	43	1	0	112	150	161	4	0	141
Texas	North Lake	3	64	2	0	238	294	291	7	0	255
Texas	North Main	4	9	0	0	34	42	40	1	0	35
Texas	North Texas	3	0	0	0	13	13	9	0	0	8
Texas	Nueces Bay	5	0	0	0	1	1	1	0	0	1
Texas	Nueces Bay	6	2	0	0	138	140	130	3	0	114
Texas	Nueces Bay	7	7	0	0	489	495	491	12	0	429
Texas	O W Sommers	1	83	2	0	405	478	544	14	0	475
Texas	O W Sommers	2	4	0	0	184	188	367	9	0	321
Texas	Oak Creek	1	16	0	0	92	108	122	3	0	107
Texas	Oklaunion	1	8,980	227	0	0	7,793	8,980	227	0	7,843
Texas	P H Robinson	PHR1	6	0	0	639	644	497	13	0	434

TABLE 2. -- PHASE II ALLOWANCE ALLOCATIONS

State	Plant Name	Boiler [1]	Allowances for years 2000–2009					Allowances for years 2010 and thereafter			
			(A) [2] Unadjusted basic	(B) Special allowance reserve deduction	(C) Additional basic (§405(a)(3))	(D) Total Bonus	(E) [3] Total annual phase II	(F) [2] Unadjusted basic	(G) Special allowance reserve deduction	(H) Additional basic (§ 405(a)(3))	(I) [4] Total annual phase II
Texas	P H Robinson	PHR2	7	0	0	487	493	560	14	0	489
Texas	P H Robinson	PHR3	7	0	0	679	685	578	15	0	504
Texas	P H Robinson	PHR4	19	0	0	779	798	707	18	0	617
Texas	Paint Creek	1	3	0	0	8	11	11	0	0	10
Texas	Paint Creek	2	3	0	0	8	11	12	0	0	11
Texas	Paint Creek	3	21	1	0	10	28	61	2	0	53
Texas	Paint Creek	4	1	0	0	104	105	118	3	0	103
Texas	Parkdale	1	11	0	0	24	34	41	1	0	38
Texas	Parkdale	2	16	0	0	48	62	75	2	0	65
Texas	Parkdale	3	21	1	0	43	61	87	2	0	76
Texas	Permian Basin	5	2	0	0	101	103	120	3	0	105
Texas	Permian Basin	6	316	8	0	526	800	945	24	0	825
Texas	Pirkey	1	22,597	572	0	757	20,364	22,597	570	0	19,738
Texas	Plant X	111B	0	0	0	0	0	0	0	0	0
Texas	Plant X	112B	0	0	0	2	2	1	0	0	1
Texas	Plant X	113B	0	0	0	89	89	34	1	0	30
Texas	Plant X	114B	0	0	0	0	0	3	0	0	3
Texas	Powerlane Plant	2	522	13	0	2	454	533	13	0	466
Texas	Powerlane Plant	3	39	1	0	3	37	43	1	0	38
Texas	R W Miller	1	2	0	0	53	55	62	2	0	54
Texas	R W Miller	2	0	0	0	98	98	112	3	0	98
Texas	R W Miller	3	1	0	0	217	218	206	5	0	180
Texas	Ray Olinger	BW2	5	0	0	55	60	60	2	0	52
Texas	Ray Olinger	BW3	9	0	0	71	79	96	2	0	86
Texas	Ray Olinger	CE1	9	0	0	34	42	38	1	0	33
Texas	Rio Pecos	5	1	0	0	63	64	79	2	0	69
Texas	Rio Pecos	6	2	0	0	177	179	196	5	0	171
Texas	River Crest	1	32	1	0	33	61	80	2	0	70
Texas	Sabine	1	3	0	0	149	152	233	6	0	203
Texas	Sabine	2	2	0	0	162	164	225	6	0	196
Texas	Sabine	3	7	0	0	569	575	574	14	0	502
Texas	Sabine	4	8	0	0	496	503	714	18	0	624
Texas	Sabine	5	4	0	0	318	322	447	11	0	391
Texas	Sam Bertron	SRB1	0	0	0	57	57	55	1	0	48
Texas	Sam Bertron	SRB2	0	0	0	18	18	38	1	0	33
Texas	Sam Bertron	SRB3	7	0	0	114	120	103	3	0	90
Texas	Sam Bertron	SRB4	3	0	0	76	79	90	2	0	79
Texas	Sam Seymour	1	17,210	436	0	849	15,782	17,210	434	0	15,033
Texas	Sam Seymour	2	18,748	475	0	986	17,255	18,748	473	0	16,376
Texas	Sam Seymour	3	11,992	304	0	0	10,405	11,992	303	0	10,474
Texas	San Angelo	2	2	0	0	159	161	187	5	0	163
Texas	San Miguel	**2	0	0	0	0	0	0	0	0	0
Texas	San Miguel	SM-1	18,994	481	0	564	17,075	18,994	479	0	16,591
Texas	Sandow	4	28,423	719	0	826	25,468	28,423	718	0	24,828
Texas	Seaholm	9	1	0	0	3	4	3	0	0	3
Texas	Sim Gideon	1	1	0	0	46	47	58	1	0	51
Texas	Sim Gideon	2	1	0	0	55	56	66	2	0	57

TABLE 2. -- PHASE II ALLOWANCE ALLOCATIONS

State	Plant Name	Boiler [1]	Allowances for years 2000–2009					Allowances for years 2010 and thereafter			
			(A) [2] Unadjusted basic	(B) Special allowance reserve deduction	(C) Additional basic (§405(a)(3))	(D) Total Bonus	(E) [3] Total annual phase II	(F) [2] Unadjusted basic	(G) Special allowance reserve deduction	(H) Additional basic (§ 405(a)(3))	(I) [4] Total annual phase II
Texas	Sim Gideon	3	7	0	0	271	277	366	9	0	320
Texas	Spencer	4	6	0	0	12	19	20	1	0	17
Texas	Spencer	5	11	0	0	13	23	26	1	0	22
Texas	Stryker Creek	1	19	0	0	153	170	157	4	0	137
Texas	Stryker Creek	2	25	1	0	503	525	642	16	0	561
Texas	T C Ferguson	1	3	0	0	250	253	289	7	0	253
Texas	T H Wharton	THW1	0	0	0	7	7	6	0	0	5
Texas	T H Wharton	THW2	5	0	0	92	97	93	2	0	82
Texas	Tap One	U1	2,426	81	0	0	2,106	2,426	81	0	2,119
Texas	Tap One	U2	4,000	101	0	0	3,472	4,000	101	0	3,494
Texas	Tap One	**3	0	0	0	0	0	0	0	0	0
Texas	Tap One	**4	0	0	0	0	0	0	0	0	0
Texas	Tolk Station	171B	16,035	406	0	748	14,662	16,035	405	0	14,008
Texas	Tolk Station	172B	15,884	402	0	542	14,326	15,884	401	0	13,674
Texas	Tradinghouse	1	19	0	0	575	592	589	15	0	514
Texas	Tradinghouse	2	45	1	0	954	994	1,030	26	0	900
Texas	Trinidad	7	1	0	0	5	6	4	0	0	4
Texas	Trinidad	8	1	0	0	0	1	3	0	0	3
Texas	Trinidad	9	2	0	0	133	135	131	3	0	115
Texas	Twin Oak	1	9,156	232	0	0	7,947	9,156	231	0	7,999
Texas	Twin Oak	2	6,457	163	0	0	5,603	6,457	163	0	5,640
Texas	V H Braunig	1	2	0	0	75	77	140	4	0	122
Texas	V H Braunig	2	3	0	0	118	121	160	4	0	140
Texas	V H Braunig	3	5	0	0	411	416	447	11	0	391
Texas	Valley	1	7	0	0	71	77	111	3	0	97
Texas	Valley	2	46	1	0	470	516	616	16	0	538
Texas	Valley	3	2	0	0	122	124	146	4	0	129
Texas	Victoria	5	7	0	0	0	6	7	0	0	6
Texas	Victoria	6	0	0	0	6	6	4	0	0	4
Texas	Victoria	7	1	0	0	109	110	116	3	0	101
Texas	Victoria	8	3	0	0	235	238	255	6	0	223
Texas	W A Parish	WAP1	1	0	0	56	57	56	1	0	51
Texas	W A Parish	WAP2	1	0	0	55	56	51	1	0	45
Texas	W A Parish	WAP3	0	0	0	245	245	181	5	0	156
Texas	W A Parish	WAP4	7	0	0	551	557	583	15	0	509
Texas	W A Parish	WAP5	24,960	632	0	1,036	22,693	24,960	630	0	21,802
Texas	W A Parish	WAP6	22,569	572	0	992	20,593	22,569	570	0	19,731
Texas	W A Parish	WAP7	16,386	415	0	802	15,020	16,386	414	0	14,312
Texas	W A Parish	WAP8	7,325	185	0	676	7,233	7,325	185	0	6,398
Texas	W B Tuttle	1	0	0	0	2	2	3	0	0	3
Texas	W B Tuttle	2	0	0	0	19	19	20	1	0	17
Texas	W B Tuttle	3	0	0	0	11	11	15	0	0	13
Texas	W B Tuttle	4	1	0	0	47	48	60	2	0	52
Texas	Webster	WEB1	0	0	0	14	14	6	0	0	5
Texas	Webster	WEB2	0	0	0	17	17	8	0	0	7
Texas	Webster	WEB3	4	0	0	339	343	365	9	0	319
Texas	Welsh	1	14,569	368	0	579	13,221	14,569	368	0	12,725

TABLE 2. — — PHASE II ALLOWANCE ALLOCATIONS

State	Plant Name	Boiler [1]	Allowances for years 2000–2009					Allowances for years 2010 and thereafter			
			(A) [2] Unadjusted basic	(B) Special allowance reserve deduction	(C) Additional basic (§405(a)(3))	(D) Total Bonus	(E) [3] Total annual phase II	(F) [2] Unadjusted basic	(G) Special allowance reserve deduction	(H) Additional basic (§ 405(a)(3))	(I) [4] Total annual phase II
Texas	Welsh	2	14,069	356	0	533	12,741	14,069	355	0	12,269
Texas	Welsh	3	16,560	419	0	727	15,097	16,560	418	0	14,465
Texas	Wilkes	1	8	0	0	23	30	66	2	0	57
Texas	Wilkes	2	1	0	0	117	118	106	3	0	92
Texas	Wilkes	3	1	0	0	128	129	84	2	0	73
Utah	Bonanza	1–1	10,059	255	0	1,982	10,709	10,059	254	0	8,786
Utah	Carbon	1	2,186	55	0	0	1,897	2,186	55	0	1,910
Utah	Carbon	2	2,855	72	0	0	2,478	2,855	72	0	2,494
Utah	Gadsby	1	28	1	0	0	24	28	1	0	24
Utah	Gadsby	2	466	12	0	1,282	1,667	466	12	0	407
Utah	Gadsby	3	1,734	44	0	747	2,252	1,734	44	0	1,514
Utah	Hale	1	1	0	0	0	1	1	0	0	1
Utah	Hunter (Emery)	1	8,517	216	0	0	7,390	8,517	215	0	7,439
Utah	Hunter (Emery)	2	9,096	230	0	0	7,893	9,096	230	0	7,945
Utah	Hunter (Emery)	3	12,859	326	0	0	11,156	12,859	325	0	11,232
Utah	Huntington	1	9,057	229	0	0	7,859	9,057	229	0	7,911
Utah	Huntington	2	11,145	282	0	0	9,671	11,145	281	0	9,735
Utah	Intermountain	1SGA	3,285	83	0	0	2,850	3,285	83	0	2,869
Utah	Intermountain	2SGA	3,306	84	0	0	2,870	3,306	84	0	2,889
Vermont	J C Mcnell	1	43	1	0	66	104	43	1	0	36
Virginia	Bremo Bluff	3	2,017	51	0	264	2,015	2,017	51	0	1,762
Virginia	Bremo Bluff	4	5,897	149	0	0	5,117	5,897	149	0	5,151
Virginia	Chesapeake	1	871	22	0	1,355	2,111	871	22	0	761
Virginia	Chesapeake	2	1,141	29	0	1,211	2,201	1,141	29	0	996
Virginia	Chesapeake	3	5,210	132	0	0	4,521	5,210	132	0	4,550
Virginia	Chesapeake	4	6,685	169	0	22	5,823	6,685	169	0	5,839
Virginia	Chesterfield	3	2,118	54	0	707	2,545	2,118	53	0	1,850
Virginia	Chesterfield	4	5,336	135	0	0	4,630	5,336	135	0	4,661
Virginia	Chesterfield	5	10,474	265	0	0	9,088	10,474	264	0	9,149
Virginia	Chesterfield	6	18,788	476	0	697	16,999	18,788	474	0	16,411
Virginia	Chesterfield	**6A	1,585	40	0	0	1,375	1,585	40	0	1,364
Virginia	Chesterfield	**8B	471	12	0	0	409	471	12	0	411
Virginia	Clinch River	1	6,048	153	0	55	5,303	6,048	153	0	5,262
Virginia	Clinch River	2	6,985	177	0	0	6,061	6,985	176	0	6,102
Virginia	Clinch River	3	6,458	163	0	0	5,604	6,458	163	0	5,641
Virginia	Clover	1	3,357	85	0	0	2,913	3,357	85	0	2,932
Virginia	Clover	2	3,357	85	0	0	2,913	3,357	85	0	2,932
Virginia	Glen Lyn	6	5,990	152	0	293	5,491	5,990	151	0	5,232
Virginia	Glen Lyn	51	930	24	0	339	1,145	930	23	0	813
Virginia	Glen Lyn	52	896	23	0	326	1,106	896	23	0	784
Virginia	Possum Point	1	0	0	0	0	0	0	0	0	0
Virginia	Possum Point	2	0	0	0	0	0	0	0	0	0
Virginia	Possum Point	3	2,570	65	0	398	2,628	2,570	65	0	2,245
Virginia	Possum Point	4	7,664	194	0	0	6,666	7,664	194	0	6,712
Virginia	Possum Point	5	4,955	125	0	0	4,300	4,955	125	0	4,328
Virginia	Potomac River	1	1,883	48	0	667	2,320	1,883	48	0	1,644
Virginia	Potomac River	2	1,912	48	0	636	2,295	1,912	48	0	1,670

TABLE 2. -- PHASE II ALLOWANCE ALLOCATIONS

State	Plant Name	Boiler [1]	Allowances for years 2000–2009					Allowances for years 2010 and thereafter			
			(A) [2] Unadjusted basic	(B) Special allowance reserve deduction	(C) Additional basic (§405(a)(3))	(D) Total Bonus	(E) [3] Total annual phase II	(F) [2] Unadjusted basic	(G) Special allowance reserve deduction	(H) Additional basic (§ 405(a)(3))	(I) [4] Total annual phase II
Virginia	Potomac River	3	3,150	80	0	0	2,733	3,150	80	0	2,751
Virginia	Potomac River	4	3,471	88	0	0	3,011	3,471	88	0	3,031
Virginia	Potomac River	5	3,326	84	0	0	2,888	3,326	84	0	2,907
Virginia	Yorktown	1	5,337	135	0	0	4,631	5,337	135	0	4,661
Virginia	Yorktown	2	5,137	130	0	178	4,635	5,137	130	0	4,487
Virginia	Yorktown	3	7,205	182	0	0	6,253	7,205	182	0	6,293
Washington	Centralia	BW21	21,797	552	0	0	18,914	21,797	550	0	19,039
Washington	Centralia	BW22	23,240	588	0	0	20,164	23,240	587	0	20,299
Washington	Kettle Falls	1	1	0	0	95	96	96	2	0	64
Washington	Shuffleton	1	0	0	0	0	0	0	0	0	0
Washington	Shuffleton	2	0	0	0	0	0	0	0	0	0
Washington	Shuffleton	3	0	0	0	0	0	0	0	0	0
West Virginia	Albright	1	2,256	57	0	0	1,956	2,256	57	0	1,970
West Virginia	Albright	2	2,347	59	0	0	2,037	2,347	59	0	2,050
West Virginia	Albright	3	5,119	130	119	0	4,580	5,119	129	119	4,591
West Virginia	Fort Martin	1	19,963	505	465	0	17,787	19,963	504	465	17,902
West Virginia	Fort Martin	2	19,776	501	460	0	17,620	19,776	499	460	17,734
West Virginia	Harrison	1	23,337	591	543	0	20,792	23,337	589	543	20,927
West Virginia	Harrison	2	22,152	561	516	0	19,736	22,152	559	516	19,865
West Virginia	Harrison	3	19,922	504	464	0	17,750	19,922	503	464	17,865
West Virginia	John E Amos	1	25,814	653	0	0	22,396	25,814	652	0	22,547
West Virginia	John E Amos	2	29,597	750	0	0	25,678	29,597	746	0	25,851
West Virginia	John E Amos	3	47,436	1,202	0	0	41,159	47,436	1,199	0	41,435
West Virginia	Kammer	1	8,996	228	209	0	8,015	8,996	227	209	8,067
West Virginia	Kammer	2	9,339	236	217	0	8,322	9,339	236	217	8,374
West Virginia	Kammer	3	8,347	211	194	0	7,436	8,347	211	194	7,485
West Virginia	Kanawha River	1	4,541	115	0	488	4,428	4,541	115	0	3,988
West Virginia	Kanawha River	2	4,043	102	0	753	4,262	4,043	102	0	3,531
West Virginia	Mitchell	1	21,108	534	491	0	18,807	21,108	533	491	18,926
West Virginia	Mitchell	2	21,842	553	508	0	19,460	21,842	551	508	19,587
West Virginia	Mountaineer (1301)	1	40,253	1,020	0	0	34,924	40,253	1,017	0	35,160
West Virginia	Mt Storm	1	20,987	531	489	0	18,700	20,987	530	489	18,820
West Virginia	Mt Storm	2	19,689	498	458	0	17,542	19,689	497	458	17,656
West Virginia	Mt Storm	3	20,365	516	474	0	18,145	20,365	514	474	18,262
West Virginia	Phil Sporn	11	2,776	70	0	700	3,110	2,776	70	0	2,425
West Virginia	Phil Sporn	21	2,336	59	0	920	2,947	2,336	59	0	2,040
West Virginia	Phil Sporn	31	3,345	85	0	386	3,286	3,345	84	0	2,922
West Virginia	Phil Sporn	41	2,626	66	0	755	3,034	2,626	66	0	2,294
West Virginia	Phil Sporn	51	11,999	304	0	117	10,529	11,999	303	0	10,461
West Virginia	Pleasants	1	20,115	509	0	0	17,454	20,115	508	0	17,570
West Virginia	Pleasants	2	23,076	584	0	0	20,022	23,076	583	0	20,156
West Virginia	Rivesville	7	794	20	0	542	1,231	794	20	0	694
West Virginia	Rivesville	8	2,379	60	0	446	2,511	2,379	60	0	2,078
West Virginia	Willow Island	1	1,097	28	0	536	1,488	1,097	28	0	958
West Virginia	Willow Island	2	4,595	116	0	663	4,651	4,595	116	0	4,014
Wisconsin	Alma	84	1,363	34	0	0	1,183	1,363	34	0	1,191
Wisconsin	Alma	85	2,176	55	0	0	1,890	2,176	55	0	1,902

TABLE 2. -- PHASE II ALLOWANCE ALLOCATIONS

State	Plant Name	Boiler [1]	Allowances for years 2000–2009					Allowances for years 2010 and thereafter			
			(A) [2] Unadjusted basic	(B) Special allowance reserve deduction	(C) Additional basic (§405(a)(3))	(D) Total Bonus	(E) [3] Total annual phase II	(F) [2] Unadjusted basic	(G) Special allowance reserve deduction	(H) Additional basic (§ 405(a)(3))	(I) [4] Total annual phase II
Wisconsin	Bay Front	1	583	14	0	537	1,043	583	14	0	509
Wisconsin	Bay Front	2	606	16	0	0	524	606	16	0	529
Wisconsin	Bay Front	3	0	0	0	0	0	0	0	0	0
Wisconsin	Bay Front	4	17	0	0	17	33	17	0	0	14
Wisconsin	Bay Front	5	155	4	0	144	279	155	4	0	135
Wisconsin	Blount Street	3	6	0	0	0	6	6	0	0	6
Wisconsin	Blount Street	5	7	0	0	0	7	7	0	0	6
Wisconsin	Blount Street	6	7	0	0	0	7	7	0	0	7
Wisconsin	Blount Street	7	132	4	0	0	115	132	4	0	114
Wisconsin	Blount Street	8	812	21	0	0	705	812	21	0	709
Wisconsin	Blount Street	9	1,042	26	0	0	905	1,042	26	0	910
Wisconsin	Blount Street	11	1	0	0	0	1	1	0	0	1
Wisconsin	Columbia	1	17,694	448	0	0	15,353	17,694	447	0	15,455
Wisconsin	Columbia	2	10,007	253	0	0	8,684	10,007	253	0	8,740
Wisconsin	Combustion Turbine	**2	0	0	0	0	0	0	0	0	0
Wisconsin	Commerce	25	2	0	0	2	4	4	0	0	4
Wisconsin	Edgewater	3	1,413	36	0	0	1,226	1,413	36	0	1,234
Wisconsin	Edgewater	4	11,660	301	0	0	10,306	11,660	300	0	10,377
Wisconsin	Edgewater	5	13,094	331	0	0	11,362	13,094	331	0	11,437
Wisconsin	Genoa	1	9,164	232	0	0	7,952	9,164	231	0	8,005
Wisconsin	J P Madgett	B1	8,235	208	0	229	7,375	8,235	208	0	7,193
Wisconsin	Manitowoc	6	766	18	0	0	666	766	18	0	669
Wisconsin	Manitowoc	7	929	24	0	0	805	929	23	0	812
Wisconsin	Manitowoc	8	27	0	0	0	24	27	0	0	24
Wisconsin	Manitowoc	9	0	0	0	0	0	0	0	0	0
Wisconsin	Na -- 7222	**1	0	0	0	0	0	0	0	0	0
Wisconsin	Na 1 -- 7203	**CT3	0	0	0	0	0	0	0	0	0
Wisconsin	Na 1 -- 7203	**CT4	0	0	0	0	0	0	0	0	0
Wisconsin	Na 1 -- 7205	**1	0	0	0	0	0	0	0	0	0
Wisconsin	Na 1 -- 7205	**2	0	0	0	0	0	0	0	0	0
Wisconsin	Na 1 -- 7205	**3	0	0	0	0	0	0	0	0	0
Wisconsin	Na3	**1	0	0	0	0	0	0	0	0	0
Wisconsin	Na4	**1	0	0	0	0	0	0	0	0	0
Wisconsin	Nelson Dewey	1	2,884	73	0	0	2,502	2,884	73	0	2,519
Wisconsin	Nelson Dewey	2	3,208	81	0	0	2,784	3,208	81	0	2,802
Wisconsin	North Oak Creek	1	2,420	61	0	0	2,101	2,420	61	0	2,114
Wisconsin	North Oak Creek	2	2,377	60	0	0	2,063	2,377	60	0	2,076
Wisconsin	North Oak Creek	3	2,434	62	0	0	2,112	2,434	61	0	2,126
Wisconsin	North Oak Creek	4	2,837	72	0	0	2,462	2,837	72	0	2,478
Wisconsin	Pleasant Prairie	1	13,466	341	0	0	11,703	13,466	340	0	11,760
Wisconsin	Pleasant Prairie	2	19,060	482	0	0	16,540	19,060	481	0	16,648
Wisconsin	Port Washington	1	604	15	0	0	524	604	15	0	528
Wisconsin	Port Washington	2	1,179	30	0	0	1,022	1,179	30	0	1,030
Wisconsin	Port Washington	3	981	25	0	0	851	981	25	0	857
Wisconsin	Port Washington	4	919	23	0	0	797	919	23	0	803
Wisconsin	Port Washington	5	1,213	31	0	0	1,052	1,213	31	0	1,059
Wisconsin	Pulliam	3	159	4	0	0	138	159	4	0	139

TABLE 2. -- PHASE II ALLOWANCE ALLOCATIONS

State	Plant Name	Boiler [1]	Allowances for years 2000–2009					Allowances for years 2010 and thereafter			
			(A) [2] Unadjusted basic	(B) Special allowance reserve deduction	(C) Additional basic (§405(a)(3))	(D) Total Bonus	(E) [3] Total annual phase II	(F) [2] Unadjusted basic	(G) Special allowance reserve deduction	(H) Additional basic (§ 405(a)(3))	(I) [4] Total annual phase II
Wisconsin	Pulliam	4	238	6	0	0	206	238	6	0	206
Wisconsin	Pulliam	5	694	18	0	0	601	694	18	0	606
Wisconsin	Pulliam	6	904	23	0	0	784	904	23	0	789
Wisconsin	Pulliam	7	2,326	59	0	0	2,018	2,326	59	0	2,031
Wisconsin	Pulliam	8	3,603	91	0	0	3,127	3,603	91	0	3,147
Wisconsin	Rock River	1	1,782	45	0	0	1,547	1,782	45	0	1,557
Wisconsin	Rock River	2	1,693	43	0	0	1,469	1,693	43	0	1,479
Wisconsin	South Oak Creek	5	4,440	112	0	0	3,854	4,440	112	0	3,878
Wisconsin	South Oak Creek	6	5,555	141	0	0	4,820	5,555	140	0	4,852
Wisconsin	South Oak Creek	7	7,433	188	0	0	6,449	7,433	188	0	6,492
Wisconsin	South Oak Creek	8	7,303	185	0	0	6,337	7,303	184	0	6,379
Wisconsin	Stoneman	B1	202	6	0	0	175	202	6	0	176
Wisconsin	Stoneman	B2	255	6	0	0	222	255	6	0	223
Wisconsin	Valley	1	1,790	45	0	236	1,792	1,790	45	0	1,564
Wisconsin	Valley	2	1,809	46	0	241	1,811	1,809	46	0	1,580
Wisconsin	Valley	3	1,656	42	0	503	1,942	1,656	42	0	1,448
Wisconsin	Valley	4	1,613	41	0	489	1,889	1,613	41	0	1,409
Wisconsin	West Marinette	**33	0	0	0	0	0	0	0	0	0
Wisconsin	Weston	1	871	22	0	0	756	871	22	0	761
Wisconsin	Weston	2	2,068	52	0	0	1,796	2,068	52	0	1,807
Wisconsin	Weston	3	11,089	281	0	0	9,622	11,089	280	0	9,686
Wyoming	Dave Johnston	BW41	5,155	130	0	195	4,666	5,155	130	0	4,503
Wyoming	Dave Johnston	BW42	5,015	127	0	183	4,535	5,015	127	0	4,380
Wyoming	Dave Johnston	BW43	9,711	246	0	332	8,759	9,711	245	0	8,482
Wyoming	Dave Johnston	BW44	7,278	184	0	435	6,750	7,278	184	0	6,357
Wyoming	Jim Bridger	BW71	22,967	581	0	814	20,742	22,967	580	0	20,081
Wyoming	Jim Bridger	BW72	22,486	569	0	791	20,303	22,486	568	0	19,640
Wyoming	Jim Bridger	BW73	21,533	545	0	746	19,431	21,533	544	0	18,808
Wyoming	Jim Bridger	BW74	3,797	96	0	741	4,036	3,797	96	0	3,316
Wyoming	Laramie River	1	4,823	122	0	891	5,076	4,823	122	0	4,212
Wyoming	Laramie River	2	4,095	104	0	719	4,272	4,095	103	0	3,577
Wyoming	Laramie River	3	3,660	93	0	620	3,795	3,660	92	0	3,197
Wyoming	Naughton	1	5,672	144	0	239	5,160	5,672	143	0	4,954
Wyoming	Naughton	2	7,301	185	0	352	6,667	7,301	184	0	6,377
Wyoming	Naughton	3	5,566	141	0	345	5,175	5,566	141	0	4,861
Wyoming	Wyodak	BW91	20,226	512	0	616	18,167	20,226	511	0	17,666

Notes:

[1] ** In the boiler identifier denotes a planned unit or a unit for which the boiler number is unavailable.

[2] The unadjusted allowances shown in columns (A) and (F) for the Twin Oak unit 2 in Texas and Clover units 1 and 2 in Virginia assume that these units fully qualify for §405(g)(4). If they do not, then Twin Oak 2 will receive 1,760 unadjusted basic allowances, Clover 1 will receive 2,796 unadjusted basic allowances, and Clover 2 will receive 2,796 unadjusted basic allowances pursuant to §405(g)(2).

[3] Column (E) is calculated as follows:
Column (E) = Adjusted Basic Allowances for 2000 (*not shown*) – Column (B) – Conservation/Renewable reserve deduction (*not shown*) – Repowering deduction (*not shown*) + Column (C) + Column (D). The adjusted basic allowances can be estimated as: Column (A) * 0.9011. The total deduction for both the

Conservation/Renewable reserve and for Repowering can be estimated as: Column (B) * 0.3185. The results may not agree exactly with those presented in this table due to rounding.

Note: 0.9011 = factor used to pro rate the allowances in Column (A) to produce the U.S. total of 8.9 million adjusted basic allowances.
(8,900,000 ÷ U.S. total unadjusted basic allowances for 2000–2009 = 0.9011).
0.3185 = factor used to subtract the allowances withheld for the conservation/renewable energy and repowering reserves not shown in this table (30,000 and 50,000 allowances annually, respectively).
((30,000 + 50,000) ÷ 250,000 = 0.3185)

[4] Column (I) is calculated as follows:

Column (I) = Adjusted basic allowances for 2010 (*not shown*) – Column (G) + Column (H). The adjusted basic allowances for 2010 can be estimated as: Column (F) * 0.8967. The results may not agree exactly with those presented in this table due to rounding.

Note: 0.8967 = factor used to pro rate the allowances in Column (F) to produce the U.S. total of 8.9 million adjusted basic allowances.
(8,900,000 ÷ U.S. total unadjusted basic allowances for 2010 and thereafter = 0.8967).

(c) *Allowance allocation for units under § 73.18.* Upon adequate submittal of information under § 73.18(b) and confirmation of unit eligibility under § 73.18(c), the Administrator will allocate allowances to the unit account:

(1) In the amount specified in Table 3 Column E to be held in the future year subaccounts representing calendar years 2000 through 2009; and

(2) In the amount specified in the Table 3 Column I to be held in the future year subaccounts representing calendar years 2010 and each year thereafter.

TABLE 3. — PHASE II ALLOWANCE ALLOCATIONS FOR §405(g)(4) ELIGIBLE UNITS

State	Plant Name	Boiler [1]	Allowances for years 2000 - 2009					Allowances for years 2010 and thereafter			
			(A) [2]	(B)	(C)	(D)	(E) [3]	(F) [2]	(G)	(H)	(I) [4]
			Unadjusted basic	Special allowance reserve deduction	Additional basic (§405(a)(3))	Total Bonus	Total annual phase II	Unadjusted basic	Special allowance reserve deduction	Additional basic (§ 405(a)(3))	Total annual phase II
Alabama	Mcwilliams	**4	973	25	0	0	844	973	25	0	848
Arizona	Springerville	3	2,234	57	0	0	1,938	2,234	56	0	952
California	Harbor Gen Station	**10	451	11	0	0	392	451	11	0	394
California	Harbor Gen Station	**10A	798	20	0	0	693	798	20	0	697
California	Harbor Gen Station	**10B	798	20	0	0	693	798	20	0	697
Florida	G W Ivey	**22	63	2	0	0	55	63	2	0	55
Florida	Indian River	**D	730	18	0	0	634	730	18	0	638
Florida	Intercession City	**7	805	20	0	0	699	805	20	0	703
Florida	Intercession City	**8	805	20	0	0	699	805	20	0	703
Florida	Intercession City	**9	805	20	0	0	699	805	20	0	703
Florida	Intercession City	**10	805	20	0	0	699	805	20	0	703
Florida	Lauderdale	**4GT1	1,083	27	0	0	941	1,083	27	0	946
Florida	Lauderdale	**4GT2	1,083	27	0	0	941	1,083	27	0	946
Florida	Lauderdale	**5GT1	1,083	27	0	0	941	1,083	27	0	240
Florida	Lauderdale	**5GT2	1,083	27	0	0	941	1,083	27	0	946
Florida	Martin	**3ST	960	24	0	0	833	960	24	0	839
Florida	Martin	**4ST	960	24	0	0	833	960	24	0	839
Florida	Martin	**3GT1	1,457	37	0	0	1,265	1,457	37	0	1,272
Florida	Martin	**3GT2	1,457	37	0	0	1,265	1,457	37	0	1,272
Florida	Martin	**4GT1	1,457	37	0	0	1,265	1,457	37	0	1,272
Florida	Martin	**4GT2	1,457	37	0	0	1,265	1,457	37	0	1,272
Illinois	Lakeside	GT1	350	9	0	0	303	350	9	0	306
Indiana	Na 1 — — 7226	**1	1,265	32	0	0	1,098	1,265	32	0	1,105
Indiana	Na 1 — — 7226	**2	1,265	32	0	0	1,098	1,265	32	0	1,105
Indiana	Na 1 — — 7226	**3	1,265	32	0	0	1,098	1,265	32	0	1,105
Iowa	Na 1 — — 7230	**1	487	12	0	0	424	487	12	0	426
Kansas	Wamego	**NA1	19	0	0	0	17	19	0	0	17
Maryland	Coal Gas Cc 1	**CT2	1,238	31	0	0	1,073	1,238	31	0	1,080
Maryland	Easton 2	**25	73	2	0	0	64	73	2	0	64
Maryland	Perryman	**51	1,304	33	0	0	1,131	1,304	33	0	1,139
Minnesota	Na 1 — — 7237	**1	973	25	0	0	844	973	25	0	848
Mississippi	Moselle	**4	778	20	0	0	676	778	20	0	680
Mississippi	Moselle	**5	237	6	0	0	206	237	6	0	207
Missouri	Combustion Turbine 1	**1	1,022	26	0	0	887	1,022	26	0	892
Missouri	Combustion Turbine 2	**2	1,022	26	0	0	887	1,022	26	0	892
Missouri	Empire Energy Center	**3	641	16	0	0	557	641	16	0	560
Missouri	Lake Road	**6	730	18	0	0	634	730	18	0	638
Nebraska	Na 1 — — 7019	**NA1	778	20	0	0	676	778	20	0	680
Nevada	Clark	**9	534	14	0	0	462	534	13	0	467
Nevada	Clark	**10	534	14	0	0	462	534	13	0	467
Nevada	Harry Allen	**GT1	651	17	0	0	562	651	17	0	565
Nevada	Harry Allen	**GT2	651	17	0	0	562	651	17	0	565
New Jersey	Butler	**1	341	9	0	0	295	341	9	0	297
New Jersey	Butler	**3	114	3	0	0	99	114	3	0	99
New Jersey	Na 1 — — 7139	**1	973	25	0	0	844	973	25	0	848
New Jersey	Na 2 — — 7140	**1	2,920	74	0	0	2,533	2,920	74	0	2,550
Ohio	Dover	**7	171	4	0	0	148	171	4	0	150
Ohio	Woodsdale	**GT6	337	9	0	0	292	337	9	0	294
Ohio	Woodsdale	**GT7	337	9	0	0	292	337	9	0	294
Pennsylvania	Trenton Cogen Proj	**1	1,386	35	0	0	1,203	1,386	35	0	1,211
South Carolina	Na 1 — — 7106	**GT1	905	23	0	0	785	905	23	0	790

TABLE 3. — — PHASE II ALLOWANCE ALLOCATIONS FOR §405(g)(4) ELIGIBLE UNITS

State	Plant Name	Boiler [1]	Allowances for years 2000–2009					Allowances for years 2010 and thereafter			
			(A) [2] Unadjusted basic	(B) Special allowance reserve deduction	(C) Additional basic (§405(a)(3))	(D) Total Bonus	(E) [3] Total annual phase II	(F) [2] Unadjusted basic	(G) Special allowance reserve deduction	(H) Additional basic (§ 405(a)(3))	(I) [4] Total annual phase II
South Carolina	Na 2 — — 7107	**GT2	905	23	0	0	785	905	23	0	790
South Carolina	Na 3 — — 7108	**GT3	905	23	0	0	785	905	23	0	790
South Dakota	Ct	**5	389	10	0	0	338	389	10	0	340
Texas	R W Miller	**4	973	25	0	0	844	973	25	0	849
Texas	R W Miller	**5	973	25	0	0	844	973	25	0	849
Texas	Twin Oak	2	6,457	163	0	0	5,603	6,457	163	0	5,640
Utah	Bonanza	**2	3,416	86	0	0	2,965	3,416	86	0	2,984
Virginia	Clover	1	3,357	85	0	0	2,913	3,357	85	0	2,932
Virginia	Clover	2	3,357	85	0	0	2,913	3,357	85	0	2,932
Virginia	East Chandler	**2	19	0	0	0	17	19	0	0	17
Wisconsin	Combustion Turbine	**1	701	18	0	0	608	701	18	0	612
Wisconsin	Concord	**1	144	4	0	0	125	144	4	0	125
Wisconsin	Concord	**2	144	4	0	0	125	144	4	0	125
Wisconsin	Concord	**3	144	4	0	0	125	144	4	0	125
Wisconsin	Concord	**4	144	4	0	0	125	144	4	0	125
Wisconsin	Na 1 — — 7203	**CT1	730	18	0	0	634	730	18	0	638
Wisconsin	Na 1 — — 7203	**CT2	44	1	0	0	39	44	1	0	39
Wisconsin	Na2	**1	874	22	0	0	759	874	22	0	763
Wisconsin	Paris	**1	142	4	0	0	123	142	4	0	124
Wisconsin	Paris	**2	142	4	0	0	123	142	4	0	124
Wisconsin	Paris	**3	142	4	0	0	123	142	4	0	124
Wisconsin	Paris	**4	142	4	0	0	123	142	4	0	124

Notes:

[1] ** in the boiler identifier denotes a planned unit or a unit for which the boiler number is unavailable.

[2] The unadjusted allowances shown in columns (A) and (F) for the Twin Oak unit 2 in Texas and Clover units 1 and 2 in Virginia assume that these units fully qualify for §405(g)(4). If they do not, then Twin Oak 2 will receive 1,760 unadjusted basic allowances, Clover 1 will receive 2,796 unadjusted basic allowances, and Clover 2 will receive 2,796 unadjusted basic allowances pursuant to §405(g)(2).

[3] Column (E) is calculated as follows:

Column (E) = Adjusted Basic Allowances for 2000 (*not shown*) – Column (B) – Conservation/Renewable reserve deduction (*not shown*) – Repowering deduction (*not shown*) + Column (C) + Column (D). The adjusted basic allowances can be estimated as: Column (A) * 0.9011. The total deduction for both the Conservation/Renewable reserve and for Repowering can be estimated as: Column (B) * 0.3185. The results may not agree exactly with those presented in this table due to rounding.

Note: 0.9011 = factor used to pro rate the allowances in Column (A) to produce the U.S. total of 8.9 million adjusted basic allowances.
(8,900,000 ÷ U.S. total unadjusted basic allowances for 2000–2009 = 0.9011).
0.3185 = factor used to subtract the allowances withheld for the conservation/renewable energy and repowering reserves not shown in this table (30,000 and 50,000 allowances annually, respectively).
((30,000 + 50,000) ÷ 250,000 = 0.3185)

[4] Column (I) is calculated as follows:

Column (I) = Adjusted basic allowances for 2010 (*not shown*) – Column (G) + Column (H). The adjusted basic allowances for 2010 can be estimated as Column (F) * 0.8987. The results may not agree exactly with those presented in this table due to rounding.

Note: 0.8987 = factor used to pro rate the allowances in Column (F) to produce the U.S. total of 8.9 million adjusted basic allowances.
(8,900,000 ÷ U.S. total unadjusted basic allowances for 2010 and thereafter = 0.8987).

(d) *Allowance allocation for units under § 73.19.* (1) Upon submittal of adequate information under § 73.19(b) and confirmation of unit eligibility under § 73.19, the Administrator will allocate allowances to the unit account:

(i) In the amount specified in Table 2 Column E to be held in the future year subaccounts representing calendar years 2000 through 2009; and

(ii) In the amount specified in the Table 2 Column I to be held in the future year subaccounts representing calendar years 2010 and each year thereafter.

(2) Units listed in Table 4 which do not submit adequate information under § 73.19(b) or which are not eligible under § 73.19 will be allocated allowances as calculated under § 73.11.

TABLE 4. — — PHASE II ALLOWANCE ALLOCATIONS FOR §405(i)(2) ELIGIBLE UNITS [1]

State	Plant Name	Boiler	Allowances for years 2000–2009			Allowances for years 2010 and thereafter		
			(A) [2]	(B)	(C) [3]	(D) [4]	(E)	(F) [5]
			Unadjusted basic	Increment for §405,i)(2)	Unadjusted basic, less §405(i)(2) increment	Unadjusted basic	Increment for §405(i)(2)	Unadjusted basic, less §405(i)(2) increment
Florida	Anclote	1	11,740	1,403	10,337	11,737	1,403	10,334
Florida	Anclote	2	12,421	1,529	10,892	12,418	1,529	10,889
Michigan	Monroe	1	27,243	198	27,045	27,243	198	27,045
Michigan	Monroe	2	28,273	495	27,778	28,273	495	27,778
Michigan	Monroe	3	26,466	445	26,021	26,466	445	26,021
Michigan	Monroe	4	29,065	930	28,135	29,065	930	28,135

Notes

[1] The unadjusted allowances shown in columns (A) and (D) for the units in this table and in columns (A) and (F) of Table 2 assume that these units fully qualify for §405(i)(2). If they do not, then they will receive the unadjusted basic allowances shown in columns (C) and (F) of this table. Please note that the unadjusted basic allowances shown will be adjusted to reach the 8.9 million ton overall cap on allowances, and furthermore that deductions for the Conservation and Renewable Energy Reserve, the Repowering Reserve, and the Special Allowance Reserve will also be deducted from the allowances shown herein.

[2] Equal to the Unadjusted basic allowances shown in column (A) of Table 2.

[3] Equal to column (A) minus column (B).

[4] Equal to the Unadjusted basic allowances shown in column (F) of Table 2.

[5] Equal to column (D) minus column (E).

[58 FR 3687, Jan. 11, 1993, as amended at 58 FR 15650, Mar. 23, 1993; 58 FR 33770, June 21, 1993; 58 FR 40747, July 30, 1993]

§73.11 Revision of allocations.

No later than June 1, 1998, the Administrator will allocate allowances to the unit accounts for each unit listed in Table 2 or 3 of §73.10, instead of the number of allowances specified in Tables 2, 3, and 4, as follows:

(a) The Administrator will allocate allowances to be held in the future year subaccounts representing calendar years 2000 through 2009 as follows:

(1) Units eligible for allowances under §73.19(a) and that documentation according to §73.19(b) will have unadjusted basic allowances as listed in Table 2 Column A.

(2) The Administrator will calculate unadjusted basic allowances (Year 2000) for existing units with approved repowering extension plans under §72.44 of this chapter according to the following equation, instead of unadjusted basic allowances listed in Table 2 Column A:

$$\text{Unit's Unadjusted Basic Allowances (Year 2000)} = \text{Baseline} \times 1.2 / 2000$$

(3) Adjustment of basic allowances. The Administrator will adjust each unit's unadjusted basic allowances as listed in Table 2 Column A, Table 3 Column A and Table 4 Column C, and as stated in paragraphs (a) (1) and (2) of this section, as follows:

$$\text{Unit's Adjusted Basic Allowances (Year 2000)} = \text{Unit's Unadjusted Basic Allowances (Year 2000)} \times \frac{8{,}900{,}000}{\text{Sum of All Unit's Unadjusted Basic Allowances (Year 2000)}}$$

(4) Repowering adjustment. The Administrator will calculate a repowering deduction according to the following equation:

$$\text{Repowering Deduction} = \text{Annual Set Aside} \times \frac{\text{Unit's Adjusted Basic Allowances (Year 2000)}}{8{,}900{,}000}$$

where:

Set Aside=Sum of all repowering allowances for the year 2000 under 40 CFR 73.21

Annual Set Aside=Set Aside/10

(5) Special allowance reserve deduction. The Administrator will calculate a Special Allowance Deduction according to the following equation:

$$\text{Special Allowance Deduction} = 250{,}000 \times \frac{\text{Unit's Adjusted Basic Allowances (Year 2000)}}{8{,}900{,}000}$$

(6) Conservation and renewable energy reserve. The Administrator will calculate the Conservation Deduction according to the following equation:

$$\text{Conservation Deduction} = 30{,}000 \times \frac{\text{Unit's Adjusted Basic Allowances (Year 2000)}}{8{,}900{,}000}$$

(7) Final allowance allocations. (i) (A) According to paragraphs (a) (1) through (6) of this section, the Administrator will revise the allowances allocated to each unit listed in Table 2 of § 73.10 and will allocate to each unit's subaccount representing calendar years 2000 through 2009 Final Revised Phase II Allowances according to the following equation:

$$\text{Unit's Final Revised Phase II Allowances (Year 2000)} = \begin{array}{l}\text{Unit's Adjusted Basic Allowances (Year 2000)} + \text{Number for Unit in Table 2 Column C} \\ - \text{Repowering Deduction} - \text{Conservation Deduction} \\ - \text{Special Allowance Deduction} + \text{Number for Unit in Table 2 Column D}\end{array}$$

(B) According to paragraphs (a) (1) through (6) of this section, the Administrator will revise the allowances allocated to each unit listed in Table 3 of § 73.10 and will allocate to each unit's subaccount representing calendar years 2000 through 2009 Final Revised Phase II Allowances according to the following equation:

$$\text{Unit's Final Revised Phase II Allowances (Year 2000)} = \begin{array}{l}\text{Unit's Adjusted Basic Allowances (Year 2000)} + \text{Number for Unit in Table 3 Column C} \\ - \text{Repowering Deduction} - \text{Conservation Deduction} \\ - \text{Special Allowance Deduction} + \text{Number for Unit in Table 3 Column D}\end{array}$$

(C) According to paragraphs (a) (1) through (6) of this section, the Administrator will revise the allowances allocated to each unit listed in Table 4 of § 73.10 (and not eligible for allocations under Table 2) and will allocate to each unit's subaccount representing calendar years 2000 through 2009 Final Revised Phase II Allowances according to the following equation:

$$\text{Unit's Final Revised Phase II Allowances (Year 2000)} = \begin{array}{l}\text{Unit's Adjusted Basic Allowances (Year 2000)} + \text{Number for Unit in Table 4 Column C} \\ - \text{Repowering Deduction} - \text{Conservation Deduction} \\ - \text{Special Allowance Deduction} + \text{Number for Unit in Table 4 Column D}\end{array}$$

(ii) (A) If, as of January 1, 1998, both the auction and sales under subpart E of this part are terminated as provided for in subpart E, instead of allowances under paragraph (a)(7)(i) of this section, the Administrator will revise the allowances allocated to each unit listed in Table 2 of § 73.10 and will allocate to each unit's subaccount representing calendar years 2000 through 2009 Final Revised Phase II Allowances according to the following equation:

$$\text{Unit's Final Revised Phase II Allowances (Year 2000)} = \text{Unit's Adjusted Basic Allowances (Year 2000)} + \text{Number for Unit in Table 2 Column C} - \text{Repowering Deduction} - \text{Conservation Deduction} + \text{Number for Unit in Table 2 Column D}$$

(B) If, as of January 1, 1998, both the auction and sales under subpart E of this part are terminated as provided for in subpart E, instead of allowances under paragraph (a)(7)(i) of this section, the Administrator will revise the allowances allocated to each unit listed in Table 3 of §73.10 and will allocate to each unit's subaccount representing calendar years 2000 through 2009 Final Revised Phase II Allowances according to the following equation:

$$\text{Unit's Final Revised Phase II Allowances (Year 2000)} = \text{Unit's Adjusted Basic Allowances (Year 2000)} + \text{Number for Unit in Table 3 Column C} - \text{Repowering Deduction} - \text{Conservation Deduction} + \text{Number for Unit in Table 3 Column D}$$

(b) The Administrator will allocate allowances to be held in the future year subaccounts representing calendar years 2010 and each year thereafter as follows:

(1) Units eligible for allowances under §73.19(a) and that documentation according to §73.19(b) will have unadjusted basic allowances as listed in Table 2 Column A.

(2) The Administrator will calculate unadjusted basic allowances (Year 2010) for units with approved repowering extension plans under §72.44 of this chapter according to the following equation, instead of unadjusted basic allowances listed in Table 2 Column F:

$$\text{Unit's Unadjusted Basic Allowances (Year 2010)} = \text{Baseline} \times 1.2 / 2000$$

(3) *Adjustment of basic allowances.* The Administrator will adjust each unit's unadjusted basic allowances as listed in Table 2 Column F, Table 3 Column F, and Table 4 Column F, and as stated in paragraphs (a) and (b) of this section, as follows:

$$\text{Unit's Adjusted Basic Allowances (Year 2010)} = \text{Unit's Unadjusted Basic Allowances (Year 2010)} \times \frac{8{,}900{,}000}{\text{Sum of All Unit's Unadjusted Basic Allowances (Year 2010)}}$$

(4) *Repowering adjustment.* The Administrator will calculate a repowering deduction according to the following equation:

$$\text{Repowering Deduction} = \text{Annual Set Aside} \times \frac{\text{Unit's Adjusted Basic Allowances (Year 2010)}}{8{,}900{,}000}$$

where:

Set Aside=Sum of all repowering allowances for the year 2000 under 40 CFR § 73.21

Annual Set Aside=Set Aside/10

(5) *Special allowance reserve deduction.* The Administrator will calculate a Special Allowance Deduction according to the following equation:

$$\text{Special Allowance Deduction} = 250{,}000 \times \frac{\text{Unit's Adjusted Basic Allowances (Year 2010)}}{8{,}900{,}000}$$

(6) *Conservation and renewable energy reserve.* The Administrator will calculate the Conservation Deduction according to the following equation:

$$\text{Conservation Deduction} = 30{,}000 \times \frac{\text{Unit's Adjusted Basic Allowances (Year 2010)}}{8{,}900{,}000}$$

(7) *Final allowance allocations.* (i) (A) According to paragraphs (b) (1) through (6) of this section, the Administrator will revise the allowances allocated to each unit listed in Table 2 of § 73.10 and will allocate to each unit's subaccount representing calendar years 2010 and each year thereafter according to the following equation:

$$\text{Unit's Final Revised Phase II Allowances (Year 2010)} = \text{Unit's Adjusted Basic Allowances (Year 2010)} + \text{Number for Unit in Table 2 Column C} - \text{Special Allowance Deduction}$$

(B) According to paragraphs (b) (1) through (6) of this section, the Administrator will revise the allowances allocated to each unit listed in Table 3 of § 73.10 and will allocate to each unit's subaccount representing calendar years 2010 and each year thereafter according to the following equation:

$$\text{Unit's Final Revised Phase II Allowances (Year 2010)} = \text{Unit's Adjusted BasicAllowances (Year 2010)} + \text{Number for Unit in Table 3 Column C} - \text{Special Allowance Deduction}$$

(ii)(A) If, as of January 1, 1998, both the auction and sales under subpart E of this part are terminated as provided for in subpart E, instead of allowances under paragraph (b)(7)(i) of this section, the Administrator will revise the allowances allocated to each unit listed in Table 2 of § 73.10 and will allocate

to unit's subaccount representing calendar years 2010 and each year thereafter according to the following equation:

$$\text{Unit's Final Revised Phase II Allowances (Year 2010)} = \text{Unit's Adjusted Basic Allowances (Year 2010)} + \text{Number for Unit in Table 2 Column C}$$

(B) If, as of January 1, 1998, both the auction and sales under subpart E of this part are terminated as provided for in subpart E, instead of allowances under paragraph (b)(7)(i) of this section, the Administrator will revise the allowances allocated to each unit listed in Table 3 of § 73.10 and will allocate to each unit's subaccount representing calendar years 2010 and each year thereafter according to the following equation:

$$\text{Unit's Final Revised Phase II Allowances (Year 2010)} = \text{Unit's Adjusted Basic Allowances (Year 2010)} + \text{Number for Unit in Table 3 Column C}$$

(C) If, as of January 1, 1998, both the auction and sales under subpart E of this part are terminated as provided for in subpart E, instead of allowances under paragraph (a)(7)(i) of this section, the Administrator will revise the allowances allocated to each unit listed in Table 4 of § 73.10 (and not eligible for allocations under Table 2) and will allocate to each unit's subaccount representing calendar years 2010 and thereafter according to the following equation:

$$\text{Unit's Final Revised Phase II Allowances (Year 2010)} = \text{Unit's Adjusted Basic Allowances (Year 2010)} + \text{Number for Unit in Table 4 Column C}$$

[58 FR 15705, Mar. 23, 1993]

§ 73.12 Rounding procedures.

(a) *Calculation rounding.* All allowances under this part and part 72 of this chapter shall be allocated as whole allowances. All calculations for such allowances shall be rounded down for decimals less than 0.500 and up for decimals of 0.500 or greater.

(b) *Achieving exact allowance reserves and allowance totals.* (1) If the sum of adjusted basic allowances exceeds 8,900,000; the sum of the deductions for the repowering annual set aside is less than the annual set aside; the sum of the deductions for the Energy Conservation and Renewable Energy Reserve is less than 30,000 allowances per year; or the sum of the deductions for the special allowance reserve is less than 250,000, then the Administrator will withdraw one allowance from each unit, beginning with the unit receiving the largest number of allowances, in descending order, until the allocated allowances balance with the number of allowances available.

(2) If the sum of adjusted basic allowances is less than 8,900,000; the sum of the deductions for the repowering annual set aside exceeds the annual set aside; the sum of the deductions for the Energy Conservation and Renewable Energy Reserve exceeds 30,000 allowances per year; or the sum of the deductions for the special allowance reserve exceeds 250,000, then the Administrator will distribute one allowance for each unit, beginning with the unit receiving the largest number of allowances, in descending order, until the allocated allowances balance with the number of allowances required.

[58 FR 15707, Mar. 23, 1993]

§ 73.13 Procedures for submittals.

(a) *Address for submittal.* All submittals under this subpart shall be made by the designated representative to the Director, Acid Rain Division, (6204J), 401 M Street, SW., Washington, DC 20460 and shall meet the requirements specified in 40 CFR 72.21.

(b) *Appeals procedures.* The designated representative may appeal the decision as to eligibility or allocation of allowances under §§ 73.16, 73.18, 73.19, and 73.20, using the appeals procedures of part 78 of this chapter.

[58 FR 15708, Mar. 23, 1993]

§§ 73.14—73.15 [Reserved]

§ 73.16 Phase I early reduction credits.

(a) *Unit eligibility.* Units listed in Table 1 of § 73.10 are eligible to receive allowance allocations under this section if:

(1) The unit is authorized by the Governor of the State in which the unit is located to make reductions in emissions of sulfur dioxide prior to calendar year 1995; and

(2) The unit is part of a utility system (which, for the purposes of this section only, includes all electrical generators operated by a utility, including those that are not fossil fuel-fired) that has decreased its total coal-fired generation, as a percentage of total system generation, by more than twenty percent between January 1, 1980, and December 31, 1985; and

(3) The unit is part of a utility system that during calendar years 1985 through 1987 had a weighted capacity factor for all coal-fired units in the system of less than fifty percent. The weighted capacity factor is equal to:

$$\text{Weighted Capacity Factor} = \frac{\text{Sum of actual generation of all coal - fired units in the utility system}}{\text{Sum of all coal generators' nameplate capacity} \times 8760}$$

(b) *Emissions reductions eligibility.* Sulfur dioxide emissions reductions eligible for allowance allocations shall:

(1) Be made no earlier than calendar year 1991 and no later than calendar year 1994; and

(2) Be due to physical changes to the plant or be a result of a change in the method of operating the plant including but not limited to changing the type or quality of fuel being burned.

(c) *Initial certification of eligibility.* The designated representative for a unit listed in Table 1 of § 73.10 that seeks allowances under this section shall apply for certification of unit eligibility prior to or accompanying a request for allowances under paragraph (d) of this section. A completed application for this certification shall be submitted according to the requirements of § 73.13 of this part and shall include the following:

(1) A letter from the Governor of the State in which the unit is located authorizing the unit to make reductions in emissions of sulfur dioxide prior to calendar year 1995;

(2) A report listing all units in the utility system, each fossil fuel-fired unit's fuel consumption and fuel heat content for calendar year 1980, and each generator's total electrical generation for calendar years 1980 and 1985 (including all generators whether fossil fuel-fired, nuclear, hydroelectric, or other.)

(d) *Request for allowances.* (1) The designated representative for the requesting unit shall submit the request for allowances according to the procedures in § 73.13 and shall include the following information:

(i) The calendar year for which credits for reductions are requested and the actual SO_2 emissions and fuel consumption in that year. For units that have not installed and received certification of their SO_2 continuous emission monitoring system prior to the calendar year(s) for which credits for reductions are requested, the designated representative shall submit photocopies of the units' Form EIA–767 for the calendar year of the requested reductions in emissions; and

(ii) A letter signed by the designated representative: (A) Stating and documenting the specific physical changes to the plant or changes in the method of operating the plant (including but not limited to changing the type or quality of fuel being burned) which resulted in the reduction of emissions; and

(B) Certifying that all photocopies are exact duplicates.

(2) The designated representative shall submit any request for allowances for years prior to 1993 no later than May 1, 1993. The designated representative shall submit any request for allowances for 1993 no later than May 1, 1994. For 1994 and after, the designated representative shall submit any request for allowances no later than March 1 of the calendar year following the year in which the reductions were made.

(e) *Allowance allocation.* The Administrator will allocate allowances to the eligible unit upon satisfactory submittal of information under paragraphs (c) and (d) of this section in the amount calculated by the following equations. Such allowances will be allocated to the eligible unit's 1995 future year subaccount. The following provisions shall apply to the allocation:

(1) ''Prior year'' means a single calendar year selected by the eligible unit from 1991 to 1994 inclusive.

(2) One ''credit'' equals one ton of eligible SO_2 emissions reductions.

(3) ''ERC units'' are units eligible for early reduction credits, and ''non-ERC units'' are fossil fuel-fired units that are part of the same utility system but are not eligible for early reduction credits.

(4) Calendar year 1990 data will be used as the basis against which early reduction credits are determined.

(5) Early reduction credits will be calculated at the unit level, subject to the restrictions in paragraph (e)(6) of this section.

(6) The number of credits for eligible Phase I units will be calculated as follows:

(i) *Comparison of the prior year utilization of ERC units to the 1990 utilization, as a percentage of system utilization.* If, as calculated below, system-wide prior year utilization of ERC units exceeds systems-wide 1990 utilization of ERC units on a percentage basis, then paragraphs (e)(6)(ii) and (iii) of this section apply. If not, the ERC units are eligible to receive early reduction credits as calculated in paragraph (e)(6)(v)(A) of this section.

$$\text{Prior year utilization} = \frac{\sum_{\text{ERC units}} \text{Heat input}_{\text{prior year}} \quad (\text{in mmBtu})}{\sum_{\text{all system units}} \text{Heat input}_{\text{prior year}} \quad (\text{in mmBtu})}$$

$$\textbf{1990}\ utilization = \frac{\sum_{ERC\ units} Heat\ input_{1990}\ (in\ mmBtu)}{\sum_{all\ system\ units} Heat\ input_{1990}\ (in\ mmBtu)}$$

(ii) *Comparison of the prior year average emission rate of all ERC units to the prior year average emission rate of all non-ERC units.* If, as calculated below, the system-wide average SO_2 emission rate of ERC units exceeds that of non-ERC units, then a unit's prior year utilization will be restricted in accordance with paragraph (e)(6)(iv) of this section. If not, then paragraph (e)(6)(iii) of this section applies.

$$\text{ERC unit prior year emissions rate} = \frac{\sum_{ERC\ units} SO_2\ emissions_{prior\ year}\ (in\ pounds)}{\sum_{ERC\ units} Heat\ input_{prior\ year}\ (in\ mmBtu)}$$

$$\text{Non-ERC unit prior year emissions rate} = \frac{\sum_{non\text{-}ERC\ units} SO_2\ emissions_{prior\ year}\ (in\ pounds)}{\sum_{non\text{-}ERC\ units} Heat\ input_{prior\ year}\ (in\ mmBtu)}$$

(iii) *Comparison of the emission rate of the non-ERC units in the prior year to the emission rate of the non-ERC units in 1990.* If, as calculated in paragraph (ii) of this section, the prior year system average non-ERC SO_2 emission rate increases above the 1990 system average non-ERC SO_2 emission rate, as calculated below, then a unit's prior year utilization will be restricted in accordance with paragraph (e)(6)(iv) of this section. If not, the ERC units are eligible to receive early reduction credits as calculated in paragraph (e)(6)(v)(A) of this section.

$$\text{Non-ERC unit 1990 emission rate} = \frac{\sum_{non\text{-}ERC\ units} SO_2\ emissions_{1990}\ (in\ pounds)}{\sum_{non\text{-}ERC\ units} Heat\ input_{1990}\ (in\ mmBtu)}$$

(iv) *Calculation of the utilization limit for restricted units.* The limit on utilization for each unit eligible for early reduction credits subject to paragraphs (e)(6) (ii) and (iii) of this section will be calculated as follows:

$$\text{ERC unit's Heat input}_{\text{prior year}}\ (\text{in mmBtu}) \times \frac{\left(\dfrac{\sum_{\text{ERC units}} \text{Heat input}_{1990}\ (\text{in mmBtu})}{\sum_{\text{all units}} \text{Heat input}_{1990}\ (\text{in mmBtu})}\right)}{\left(\dfrac{\sum_{\text{ERC units}} \text{Heat input}_{\text{prior year}}\ (\text{in mmBtu})}{\sum_{\text{all units}} \text{Heat input}_{\text{prior year}}\ (\text{in mmBtu})}\right)}$$

This result, expressed in million Btus, is the restricted utilization of the ERC unit to be used in the calculation of early reduction credits in paragraph (e)(6)(v)(B) of this section.

(v)(A) *Calculation of the unit's early reduction credits where the unit's prior year utilization is not restricted.*

$$\frac{\left(\begin{array}{c}\text{ERC unit's}\\ SO_2\text{ emission rate}_{1990}\\ (\text{in lb/mmBtu})\end{array} - \begin{array}{c}\text{ERC unit's}\\ SO_2\text{ emission rate}_{\text{prior year}}\\ (\text{in lb/mmBtu})\end{array}\right) \times \begin{array}{c}\text{heat input}_{\text{prior year}}\\ (\text{in mmBtu})\end{array}}{2000}$$

(B) *Calculation of the unit's early reduction credits where the unit's prior year utilization is restricted.*

$$\frac{\left(\begin{array}{c}\text{ERC unit's}\\ SO_2\text{ emission rate}_{1990}\\ (\text{in lb/mmBtu})\end{array} - \begin{array}{c}\text{ERC unit's}\\ SO_2\text{ emission rate}_{\text{prior year}}\\ (\text{in lb/mmBtu})\end{array}\right) \times \begin{array}{c}\text{restricted heat input from (iv)}\\ (\text{in mmBtu})\end{array}}{2000}$$

(vi) The Administrator will allocate to the ERC unit allowances equal to the lesser of the calculated number of credits in paragraphs (e)(6)(v)(A) or (v)(B) of this section and the following limitation:

$$\frac{\left(\begin{array}{c}\text{ERC unit's actual}\\ SO_2\text{ emission rate}_{1985}\\ \text{(in lb/mmBtu)}\end{array} \times \text{baseline (in mmBtu)}\right)}{2000} - \begin{array}{c}\text{Allowances}\\ \text{from Table A of the Act}\\ \text{(in tons)}\end{array}$$

[58 FR 15708, Mar. 23, 1993]

§ 73.17 [Reserved]

§ 73.18 Submittal procedures for units commencing commercial operation during the period from January 1, 1993 through December 31, 1995.

(a) *Eligibility.* To be eligible for allowances under this section, a unit shall commence commercial operation between January 1, 1993, and December 31, 1995, and have commenced construction before December 31, 1990.

(b) *Application for allowances.* No later than December 31, 1995, the designated representative for a unit expected to be eligible under this provision must submit a photocopy of a signed contract for the construction of the unit.

(c) *Commencement of commercial operation.* The Administrator will use EIA information submitted by the utility for the boiler on-line date as commencement of commercial operation.

[58 FR 15710, Mar. 23, 1993]

§ 73.19 Certain units with declining SO_2 rates.

(a) *Eligibility.* A unit is eligible for allowance allocations under this section if it meets the following requirements:

(1) It is an existing unit that is a utility unit;

(2) It serves a generator with nameplate capacity equal to or greater than 75 MWe;

(3) Its 1985 actual SO_2 emissions rate was equal to or greater than 1.2 lb/mmBtu;

(4) Its 1990 actual SO_2 emissions rate is at least 50 percent less than the lesser of its 1980 actual or allowable SO_2 emissions rate;

(5) Its 1997 actual SO_2 emission rate is less than 1.2 lb/mmBtu;

(6) It commenced commercial operation after January 1, 1970;

(7) It is part of a utility system whose combined commercial and industrial kilowatt-hour sales increased more than 20 percent between calendar years 1980 and 1990; and

(8) It is part of a utility system whose company-wide fossil-fuel SO_2 emissions rate declined 40 percent or more from 1980 to 1988.

(b) *Submittal procedures.* Not later than March 1, 1998, in order to be eligible for allowance allocations under this section, the designated representative for the unit must submit a photocopy of the unit's 1997 Form EIA–767 and a letter certifying that the photocopy is a true copy.

[58 FR 15710, Mar. 23, 1993]

§ 73.20 Phase II early reduction credits.

(a) *Unit eligibility.* Units listed in Table 2 or 3 of § 73.10 are eligible for allowances under this section if:

(1) The unit is not a unit subject to emissions limitation requirements of Phase I and is not a substitution unit (under 40 CFR 72.41) or a compensating unit (under 40 CFR 72.43);

(2) The unit is authorized by the Governor of the State in which the unit is located;

(3) The unit is part of a utility system (which, for the purposes of this section only, includes all generators operated by a single utility, including generators that are not fossil fuel-fired) that has decreased its total coal-fired generation, as a percentage of total system generation, by more than twenty percent between January 1, 1980, and December 31, 1985; and

(4) The unit is part of a utility system that during calendar years 1985 through 1987 had a weighted capacity factor for all coal-fired units in the system of less than fifty percent. The weighted capacity factor is equal to:

$$\text{Weighted Capacity Factor} = \frac{\text{Sum of actual generation of all coal-fired units in the utility system}}{\text{Sum of all coal generators' nameplate capacity} \times 8760}$$

(b) *Emissions reductions eligibility*. Sulfur dioxide emissions reductions eligible for allowance credits at units eligible under paragraph (a) of this section must meet the following requirements:

(1) Be made no earlier than calendar year 1995 and no later than calendar year 1999; and

(2) Be due to physical changes to the plant or are a result of a change in the method of operating the plant including but not limited to changing the type or quality of fuel being burned.

(c) *Initial certification of eligibility*. The designated representative of a unit that seeks allowances under this section shall apply for certification of unit eligibility prior to or accompanying a request for allowances under paragraph (d) of this section. A completed application for this certification shall be submitted according to §73.13 and shall include the following:

(1) A letter from the Governor of the State in which the unit is located authorizing the unit to make reductions in sulfur dioxide emissions; and

(2) A report listing all units in the utility system, each fossil fuel-fired unit's fuel consumption and fuel heat content for calendar year 1980, and each generator's total electrical generation for calendar years 1980 and 1985 (including all generators, whether fossil fuel-fired, nuclear, hydroelectric or other).

(d) *Request for allowances.* (1) The designated representative of the requesting unit shall submit the request for allowances according to the procedures of §73.13 and shall include the following information:

(i) The calendar year for which credits for reductions are requested and the actual SO_2 emissions and fuel consumption in that year;

(ii) A letter signed by the designated representative stating and documenting the specific physical changes to the plant or changes in the method of operating the plant (including but not limited to changing the type or quality of fuel being burned) which resulted in the reduction of emissions; and

(iii) A letter signed by the designated representative certifying that all photocopies are exact copies.

(2) The designated representative shall submit each request for allowances no later than March 1 of the calendar year following the year in which the reductions were made.

(e) *Allowance allocation*. The Administrator will allocate allowances to the eligible unit upon satisfactory submittal of information under paragraphs (c) and (d) of this section in the amount calculated by the following equations. Such allowances will be allocated to the unit's 2000 future year subaccount.

(1) ''Prior year'' means a single calendar year selected by the eligible unit from 1995 to 1999 inclusive.

(2) One ''credit'' equals one ton of eligible SO_2 emissions reductions.

(3) ''ERC units'' are units eligible for early reduction credits, and ''non-ERC units'' are fossil fuel-fired units that are part of the same operating system but are not eligible for early reduction credits.

(4) For any unit that did not operate during 1990, the unit's 1990 SO_2 emission rate will be equal to the weighted average emission rate of all of the other units at the same source that did operate during 1990.

(5) Early reduction credits will be calculated at the unit level, subject to the restrictions in paragraph (e)(6) of this section.

(6) The number of credits for eligible Phase II units will be calculated as follows:

(i) *Comparison of the prior year utilization of ERC units to the 1990 utilization, as a percentage of system utilization*. If, as calculated below, system-wide prior year utilization of ERC units exceeds systems-wide 1990 utilization of ERC units on a percentage basis, then paragraphs (e)(6)(ii) and (iii) of this section apply. If not, the ERC units are eligible to receive early reduction credits as calculated in paragraph (e)(6)(v)(A) of this section.

$$\text{Prior year utilization} = \frac{\sum_{\text{ERC units}} \text{Heat input}_{\text{prior year}} \ (\text{in mmBtu})}{\sum_{\text{all system units}} \text{Heat input}_{\text{prior year}} \ (\text{in mmBtu})}$$

$$\text{1990 utilization} = \frac{\sum_{\text{ERC units}} \text{Heat input}_{1990} \ (\text{in mmBtu})}{\sum_{\text{all system units}} \text{Heat input}_{1990} \ (\text{in mmBtu})}$$

(ii) *Comparison of the prior year average emission rate of all ERC units to the prior year average emission rate of all non-ERC units.* If, as calculated below, the system-wide average SO_2 emission rate of ERC units exceeds that of non-ERC units, then a unit's prior year utilization will be restricted in accordance with paragraph (e)(6)(iv) of this section. If not, then paragraph (iii) of this section applies.

$$\text{ERC unit prior year emissions rate} = \frac{\sum_{\text{ERC units}} SO_2 \text{ emissions}_{\text{prior year}} \ (\text{in pounds})}{\sum_{\text{ERC units}} \text{Heat input}_{\text{prior year}} \ (\text{in mmBtu})}$$

$$\text{Non-ERC unit prior year emissions rate} = \frac{\sum_{\text{non-ERC units}} SO_2 \text{ emissions}_{\text{prior year}} \ (\text{in pounds})}{\sum_{\text{non-ERC units}} \text{Heat input}_{\text{prior year}} \ (\text{in mmBtu})}$$

(iii) *Comparison of the emission rate of the non-ERC units in the prior year to the emission rate of the non-ERC units in 1990.* If, as calculated in paragraph (ii) of this section, the prior year system average non-ERC SO_2 emission rate increases above the 1990 system average non-ERC SO_2 emission rate, as calculated below, then a unit's prior year utilization will be restricted in accordance with paragraph (e)(6)(iv) of this section. If not, the ERC units are eligible to receive early reduction credits as calculated in paragraph (e)(6)(v)(A) of this section.

$$\text{Non-ERC unit 1990 emission rate} = \frac{\sum_{\text{non-ERC units}} SO_2 \text{ emissions}_{1990} \text{ (in pounds)}}{\sum_{\text{non-ERC units}} \text{Heat input}_{1990} \text{ (in mmBtu)}}$$

(iv) *Calculation of the utilization limit for restricted units.* The limit on utilization for each unit eligible for early reduction credits subject to paragraphs (e)(6) (ii) and (iii) of this section will be calculated as follows:

$$\text{ERC unit's Heat input}_{\text{prior year}} \text{ (in mmBtu)} \times \left(\frac{\left(\frac{\sum_{\text{ERC units}} \text{Heat input}_{1990} \text{ (in mmBtu)}}{\sum_{\text{all units}} \text{Heat input}_{1990} \text{ (in mmBtu)}} \right)}{\left(\frac{\sum_{\text{ERC units}} \text{Heat input}_{\text{prior year}} \text{ (in mmBtu)}}{\sum_{\text{all units}} \text{Heat input}_{\text{prior year}} \text{ (in mmBtu)}} \right)} \right)$$

This result, expressed in million Btus, is the restricted utilization of the ERC unit to be used in the calculation of early reduction credits in paragraph (e)(6)(v)(B) of this section.

(v)(A) *Calculation of the unit's early reduction credits where the unit's prior year utilization is not restricted.*

$$\frac{\left(\begin{array}{c} \text{ERC unit's} \\ SO_2 \text{ emission rate}_{1990} \\ \text{(in lb/mmBtu)} \end{array} - \begin{array}{c} \text{ERC unit's} \\ SO_2 \text{ emission rate}_{\text{prior year}} \\ \text{(in lb/mmBtu)} \end{array} \right) \times \begin{array}{c} \text{heat input}_{\text{prior year}} \\ \text{(in mmBtu)} \end{array}}{2000}$$

(B) *Calculation of the unit's early reduction credits where the unit's prior year utilization is restricted.*

$$\frac{\left(\begin{array}{c} \text{ERC unit's} \\ SO_2 \text{ emission rate}_{1990} \\ \text{(in lb/mmBtu)} \end{array} - \begin{array}{c} \text{ERC unit's} \\ SO_2 \text{ emission rate}_{\text{prior year}} \\ \text{(in lb/mmBtu)} \end{array} \right) \times \begin{array}{c} \text{restricted heat input from (iv)} \\ \text{(in mmBtu)} \end{array}}{2000}$$

(vi) The Administrator will allocate to the ERC unit allowances equal to the lesser of the calculated number of credits in paragraphs (e)(6)(v) (A) or (B) of this section and the following limitation:

$$\frac{\text{ERC unit's heat input}_{\text{prior year}} \times \text{the lesser of} \begin{bmatrix} 2.5 \\ \text{or} \\ \text{the most stringent SIP emissions limit (in lb/mmBtu)} \end{bmatrix}}{2000} - \begin{matrix} \text{ERC unit's} \\ SO_2 \text{ emissions}_{\text{prior year}} \\ \text{(in tons)} \end{matrix}$$

(f) *Allowance loan program.* (1) *Eligibility.* Units eligible for Phase II early reduction credits under paragraph (a) of this section are eligible for allowances under this paragraph (f) if the weighted average emission rate (based on heat input) for the prior year for all of the affected units in the unit's dispatch system was less than the system-wide weighted average emission rate for 1990. The weighted average emission rate shall be calculated as follows:

$$\text{Weighted Average Emission Rate} = \frac{\sum \text{Unit Emission Rate} \times \text{Unit Utilization (inmmBtu)}}{\sum \text{Unit Utilization}}$$

For the purposes of this calculation, the unit's dispatch system will be the dispatch system as it existed as of November 15, 1990.

(2) *Allowance Calculation.* Allowances under this paragraph (f) shall be calculated as follows:

$$\text{Unit Allowances} = \left[1.75 - \begin{matrix} \text{Greater of 1990 emission rate or} \\ \text{Prior year emission rate} \end{matrix}\right] \times \text{Prior year utilization/2000}$$

(3) *Allowance Loan.* (i) The number of allowances calculated under paragraph (f)(2) of this section shall be allocated to the unit's year 2000 subaccount.

(ii) The number of allowances calculated under paragraph (f)(2) of this section shall be deducted, contemporaneously with the allocation under paragraph (f)(3)(i) of this section, from the unit's year 2015 subaccount.

(iii) Notwithstanding paragraph (f)(3)(ii) of this section, if the number of allowances to be deducted exceeds the amount of allowances allocated to the unit for the year 2015, allowances in the year 2015 subaccount equal to the amount of allowances allocated to the unit for the year 2015 shall be deducted. In addition to the deduction from the year 2015 subaccount, a sufficient amount of allowances in the year 2016 subaccount (up to the amount of allowances allocated to the unit for the year 2016) shall be deducted contemporaneously, such that the sum of the allowances deducted from the subaccounts equals the number of allowances required to be deducted under paragraph (f)(3)(ii) of this section.

(iv) Notwithstanding paragraph (f)(3)(ii) of this section, the procedure in paragraph (f)(3)(iii) shall be applied as follows to each year after 2015 (year-by-year in numerical order) for which

the number of allowances to be deducted from that year's subaccount exceeds the number allocated to the unit for that year: allowances equal to the number allocated for that year shall be deducted from that year's subaccount and the remainder (up to the amount allocated) necessary to equal the number of allowances required to be deducted under paragraph (f)(3)(ii) of this section shall be deducted from the next year's subaccount.

(v) The owners and operators of the unit shall ensure that sufficient allowances are available to make the full deductions required under paragraphs (f)(3)(ii), (iii), and (iv) of this section. The designated representative may specify the serial number of each allowance to be deducted.

(4) *ERC Units.* Any unit to which allowances are allocated under paragraph (f)(3)(i) of this section shall be considered an ERC unit for purposes of applying the restrictions in paragraph (e)(6) of this section.

[58 FR 15711, Mar. 23, 1993, as amended at 62 FR 34150, June 24, 1997]

EFFECTIVE DATE NOTE: At 62 FR 34150, June 24, 1997, §73.20 was amended by revising paragraph (e)(4) and by adding paragraph (f), effective Aug. 8, 1997. For the convenience of the user, the superseded text is set forth as follows:

§73.20 Phase II early reduction credits.

* * * * *

(e) * * *

(4) Calendar year 1990 data will be used as the basis against which early reduction credits are determined.

* * * * *

§73.21 Phase II repowering allowances.

(a) *Repowering allowances.* In addition to allowances allocated under §73.11, the Administrator will allocate, to each existing unit (under §72.44(b)(1) of this chapter) with an approved repowering extension plan, allowances for use during the repowering extension period approved under §72.44(f)(2)(ii) of this chapter (including a prorated allocation for any fraction of a year) equal to:

$$\text{Unit's Repowering Allowances} = \frac{\text{Unit's Baseline} \times \text{the lesser of} \left[\begin{array}{c}\text{1995 SIP} \\ \text{or} \\ \text{1995 Actual Rate}\end{array}\right]}{2000} - \text{Unit's Adjusted Basic Allowances}$$

Where:

1995 SIP=Most stringent federally enforceable state implementation plan SO_2 emissions limitation for 1995.

1995 Actual Rate=1995 actual SO_2 emissions rate

Unit's Adjusted Basic Allowances = Unit's Year 2000 Adjusted Basic Allowances as calculated at §73.11(a)(3)

(b) Upon commencement of commercial operation of a new unit (under §72.44(b)(2) of this chapter) with an approved repowering extension plan, allowances for use during the repowering extension period approved will end and allocations under §73.11(a) and (b) for the existing unit will be transferred to the subaccounts for the new unit.

(c)(1) If the designated representative for a repowering unit terminates the repowering extension plan in accordance with §72.44(g)(1) of this chapter, the repowering allowances allocated to that unit by paragraph (a) of this section will be terminated and any necessary allowances from that unit's account forfeited, calculated in the following manner:

$$\text{Forfeited Repowering Allowances} = \text{Forfeiture Period} \times \left[\frac{\text{Unit's Baseline} \times \text{the lesser of} \left[\begin{array}{c} \text{1995 SIP} \\ \text{or} \\ \text{1995 Actual Rate} \end{array} \right]}{2000} - \text{Unit's Adjusted Basic Allowances} \right]$$

Where:

Forfeiture Period=difference (as a portion of a year) between the end of the approved repowering extension and the end of the repowering extension under §72.44(g)(1)(ii)

1995 SIP=Most stringent federally enforceable state implementation plan SO_2 emissions limitation for 1995.

1995 Actual Rate=1995 actual SO_2 emissions rate

Unit's Adjusted Basic Allowances = Unit's Year 2000 Adjusted Basic Allowances as calculated at §73.11(a)(3)

(2) The Administrator will reallocate the allowances forfeited in paragraph (b)(1) of this section to all Table 2 and 3 units' years 2000 through 2009 subaccounts in the following manner:

$$\text{Reallocation} = \frac{\text{Forfeited Repowering Allowances}}{10} \times \frac{\text{Unit's Repowering Deduction}}{\text{Sum of All Table 2 and 3 Units' Repowering Deductions}}$$

[53 FR 15713, Mar. 23, 1993]

§§73.22—73.24 [Reserved]

§73.25 Phase I extension reserve.

The Administrator will initially allocate 3.5 million allowances to the Phase I Extension Reserve account of the Allowance Tracking System. Allowances from this Reserve will be allocated to units under §72.42 of this chapter. Allowances remaining in the Phase I Extension Reserve account following allocation of all extension allowances under §72.42 of this chapter will remain in the Reserve.

[58 FR 3687, Jan. 11, 1993]

§73.26 Conservation and renewable energy reserve.

The Administrator will allocate 300,000 allowances to the Conservation and Renewable Energy Reserve subaccount of the Acid Rain Data System. Allowances from this Reserve will be allocated to units under subpart F of this part. Termination of this Reserve and reallocation of allowances will be made under §73.80(c).

[53 FR 15714, Mar. 23, 1993]

§73.27 Special allowance reserve.

(a) *Establishment of Reserve.* (1) The Administrator will allocate 150,000 allowances annually for calendar years 1995 through 1999 to the Auction Subaccount of the Special Allowance Reserve.

(2) The Administrator will allocate 200,000 allowances annually for calendar years 2000 and each year thereafter to the Auction Subaccount of the Special Allowance Reserve.

(3) The Administrator will allocate 50,000 allowances annually for calendar years 2000 and each year thereafter to the Direct Sale Subaccount of the Special Allowance Reserve.

(b) *Distribution of proceeds.* (1) Monetary proceeds from the auctions and sales of allowances from the Special Allowance Reserve (under subpart E of this part) for use in calendar years 1995 through 1999 will be distributed to the designated representative of the unit according to the following equation:

unit proceeds=(Column B of Table 1 of section 73.10/150,000) × total proceeds

(2) Until June 1, 1998, monetary proceeds from the auctions and sales of allowances from the Special Allowance Reserve (under subpart E of this part) for use in calendar years 2000 through 2009 will be distributed to the designated representative of each unit listed in Table 2 or 3 according to the following equations:

$$\text{Unit Proceeds} = \left[\frac{\text{Table 2 Column B}}{250000}\right] \times \text{Total Proceeds}$$

(3) On or after June 1, 1998, monetary proceeds from the auctions and sales of allowances from the Special Allowance Reserve (under subpart E of this part) for use in calendar years 2000 through 2009 will be distributed to the designated representative of each unit listed in Table 2 or 3 according to the following equation:

$$\text{Unit Proceeds} = \left[\frac{\text{Table 3 Column B}}{250000}\right] \times \text{Total Proceeds}$$

(4) Until June 1, 1998, monetary proceeds from the auctions and sales of allowances from the Special Allowance Reserve (under subpart E of this part) for use in calendar years 2010 and thereafter will be distributed to the designated representative of each unit listed in Table 2 or 3 according to the following equations:

$$\text{Unit Proceeds} = \left[\frac{\text{Table 2 Column G}}{250000}\right] \times \text{Total Proceeds}$$

$$\text{Unit Proceeds} = \left[\frac{\text{Table 3 Column G}}{250000}\right] \times \text{Total Proceeds}$$

(5) On or after June 1, 1998, monetary proceeds from the auctions and sales of allowances from the Special Allowance Reserve (under subpart E of this part) for use in calendar years 2010 and thereafter will be distributed to the designated representative of each unit listed in Table 2 or 3 according to the following equation:

$$\text{Unit Proceeds} = \left[\frac{\text{Unit's Special Allowance Deduction under §73.11(b)(5)}}{250000}\right] \times \text{Total Proceeds}$$

(c) *Reallocation of allowances.* (1) Allowances remaining in the Special Allowance Reserve following the annual auctions and sales (under subpart E of this part) for use in calendar years 1995 through 1999 will be reallocated to the unit's Allowance Tracking System Account according to the following equation:

unit allowances = (Column B of Table 1 of section 73.10/150,000) × Allowances remaining

(2) Until June 1, 1998, allowances, for use in calendar years 2000 through 2009, remaining in the Special Allowance Reserve at the end of each year, following that year's auction and sale (under subpart E of this part) will be reallocated to the unit's Allowance Tracking System Account according to the following equations:

$$\text{Unit Allowances} = \left[\frac{\text{Table 2 Column B}}{250000}\right] \times \text{Allowances Remaining}$$

$$\text{Unit Allowances} = \left[\frac{\text{Table 3 Column B}}{250000}\right] \times \text{Allowances Remaining}$$

(3) On or after June 1, 1998, allowances, for use in calendar years 2000 through 2009, remaining in the Special Allowance Reserve at the end of each year, following that year's auction and sale (under subpart E of this part) will be reallocated to the unit's Allowance Tracking System Account according to the following equation:

$$\text{Unit Allowances} = \left[\frac{\text{Unit's Special Allowance Deduction under §73.11(a)(5)}}{250000}\right] \times \text{Allowances Remaining}$$

(4) Until June 1, 1998, allowances, for use in calendar years 2010 and thereafter, remaining in the Special Allowance Reserve at the end of each year following that year's auction and sale (under subpart E of this part) will be reallocated to the unit's Allowance Tracking System Account according to the following equations:

$$\text{Unit Allowances} = \left[\frac{\text{Table 2 Column G}}{250000}\right] \times \text{Allowances Remaining}$$

$$\text{Unit Allowances} = \left[\frac{\text{Table 3 Column G}}{250000}\right] \times \text{Allowances Remaining}$$

(5) On or after June 1, 1998, allowances, for use in calendar years 2010 and thereafter, remaining in the Special Allowance Reserve at the end of each year, following that year's auction and sale (under subpart E of this part) will be reallocated to the unit's Allowance Tracking System Account according to the following equation:

$$\text{Unit Allowances} = \left[\frac{\text{Unit's Special Allowance Deduction under §73.11(b)(5)}}{250000}\right] \times \text{Allowances Remaining}$$

(d) *Calculation rounding.* All proceeds under this section shall be distributed as whole dollars. All calculations for such allowances shall be rounded down for decimals less than .5 and up for decimals of .5 or greater.

(e) *Achieving exact totals.* (1) If the sum of the proceeds to be distributed under paragraph (b) of this section exceeds the total proceeds or the allowances to be reallocated under paragraph (c) of this section exceeds the allowances remaining, then the Administrator will withdraw one dollar or allowance from each unit, beginning with the unit receiving the largest number of dollars or allowances, in descending order, until the distribution balances with the proceeds and the reallocated allowances balance with the remaining allowances.

(2) If the sum of the proceeds to be distributed under paragraph (b) of this section is less than the total proceeds or the allowances to be reallocated under paragraph (c) of this section is less than the allowances remaining, then EPA will distribute one dollar or allowance for each unit, beginning with the unit receiving the largest number of dollars or allowances, in descending order, until the distribution balances with the proceeds and the reallocated allowances balance with the remaining allowances.

[58 FR 3687, Jan. 11, 1993, as amended at 58 FR 15714, Mar. 23, 1993]

Subpart C—Allowance Tracking System

SOURCE: 58 FR 3691, Jan. 11, 1993, unless otherwise noted.

§ 73.30 Allowance tracking system accounts.

(a) *Nature and function of unit accounts.* The Administrator will establish accounts for all affected units pursuant to § 73.31 (a) and (b). All allocations of allowances pursuant to subparts B, E, and F of this part and part 72 of this chapter, transfers of allowances made pursuant to subparts C and

D, and deductions of allowances made for purposes of offsetting emissions pursuant to §73.35 (b) and (d) and parts 72, 75, and 77 of this chapter will be recorded in the unit's Allowance Tracking System account.

(b) *Nature and function of general accounts.* Transfers of allowances held for any person other than an affected unit, made pursuant to subparts C, D, E, F, and G of this part will be recorded in that person's Allowance Tracking System account established pursuant to §73.31(c).

[58 FR 3687, Jan. 11, 1993; 58 FR 40747, July 30, 1993]

§73.31 Establishment of accounts.

(a) *Existing affected units.* The Administrator will establish an Allowance Tracking System account and allocate allowances for each unit that is, or will become, an existing affected unit pursuant to sections 404(a) or 405 of the Act and §72.6 of this chapter.

(b) *New units.* Upon receipt of a complete certificate of representation for the designated representative for a new unit pursuant to part 72, subpart B of this chapter, the Administrator will establish an Allowance Tracking System account for the unit.

(c) *General accounts.* (1) Any person may apply to open an Allowance Tracking System account for the purpose of holding and transferring allowances. Such application shall be submitted to the Administrator in a format to be specified by the Administrator by means of the Allowance Account Information Form, or by providing the following information in a similar format:

(i) Name and title of the authorized account representative and alternate authorized account representative (if any) pursuant to §73.33;

(ii) Mailing address, telephone number and facsimile transmission number (if any) of the authorized account representative and alternate authorized account representative (if any);

(iii) Organization or company name (if applicable) and type of organization (if applicable);

(iv) A list of all persons subject to a binding agreement for the authorized account representative to represent their ownership interest with respect to the allowances held in the general account and which shall be amended and resubmitted within 30 days following any transaction giving rise to any change of the list of persons subject to the binding agreement;

(v) A certification statement by the authorized account representative and alternate authorized account representative (if any) that reads ''I certify that I was selected under the terms of an agreement that is binding on all persons who have an ownership interest with respect to allowances held in the Allowance Tracking System account. I certify that I have all necessary authority to carry out my duties and responsibilities on behalf of the persons with an ownership interest and that they shall be fully bound by my actions, inactions, or submissions under 40 CFR part 73. I shall abide by any fiduciary responsibilities assigned pursuant to the binding agreement. I am authorized to make this submission on behalf of the persons with an ownership interest for whom this submission is made. I certify under penalty of law that I have personally examined and am familiar with the information submitted in this document and all its attachments. Based on my inquiry of those individuals with primary responsibility for obtaining the information, I certify that the information is to the best of my knowledge and belief true, accurate, and complete. I am aware that there are significant penalties for submitting false material information, or omitting material information, including the possibility of fine or imprisonment for violations.'';

(vi) The signature of the authorized account representative and the alternate authorized account representative (if any); and

(vii) The date of the signature of the authorized account representative and the alternate authorized account representative (if any).

(2) Upon receipt of such complete application, the Administrator will establish an Allowance Tracking System account for the person or persons identified in the application.

(3) No allowance transfers will be recorded for a general account until the Administrator has established the new account.

(d) *Account identification.* The Administrator will assign a unique identifying number to each account established pursuant to this section.

[58 FR 3687, Jan. 11, 1993; 58 FR 40747, July 30, 1993]

§ 73.32 Allowance account contents.

Each allowance account will include, at a minimum, the following:

(a) The name, address, telephone number and facsimile transmission number, if any, of the authorized account representative; and

(1) In the case of a unit account, a list of all persons identified as owners of record of the unit in § 72.24(a)(3) of this chapter, or

(2) In the case of a general account, a list of all persons subject to the binding agreement for the authorized account representative to represent their ownership interest with respect to allowances, as identified in accordance with § 73.31(c);

(b) A list of transfers of allowances to, and from, the account, including the identity of the transferror and transferee accounts;

(c) In the case of a unit account for an existing affected unit, beginning in 1995, a compliance subaccount;

(d) In the case of a unit account for a new unit, a compliance subaccount;

(e) In the case of a general account, a current year subaccount;

(f) Future year subaccounts for each of the 30 calendar years following the later of 1995 or the current calendar year;

(g) In the case of a unit account, the current total of sulfur dioxide emissions in tons for the current calendar year as reported to date pursuant to part 75 of this chapter.

[58 FR 3687, Jan. 11, 1993; 58 FR 40747, July 30, 1993]

§ 73.33 Authorized account representative.

(a) Following the establishment of an Allowance Tracking System account, all matters pertaining to the account, including, but not limited to, the deduction and transfer of allowances in the account, shall be undertaken only by the authorized account representative.

(b) *Authorized account representative identification.* The Administrator will assign a unique identifying number to each authorized account representative or alternate authorized account representative identified pursuant to § 73.31(c).

(c) *Notification of parties subject to the binding agreement.* The authorized account representative for a general account shall notify, in writing, all persons who have an ownership interest with respect to the allowances held in the account of any Acid Rain Program submission required by this part or in a procedure under part 78 of this chapter, by the date of submission. Each person who has an ownership interest with respect to the allowances held in the account may expressly waive his or her right to receive such notification.

(d) *General account alternate authorized account representative.* Any application for opening a general account may designate one alternate authorized account representative to act on behalf of the certifying authorized account representative, in the event the authorized account representative is absent or otherwise not available to perform actions and duties under this part. The alternate shall be a natural person and shall be authorized, provided that the conditions and procedures specified in § 73.31(c)(1) are met.

(1) The alternate authorized account representative may be changed at any time by the authorized account representative upon receipt by the Administrator of a new complete application as required in § 73.31(c);

(2) The alternate authorized account representative shall be subject to the provisions of this part applicable to authorized account representatives;

(3) Whenever the term ''authorized account representative'' is used in this part it shall be construed to include the alternate authorized account representative, unless such a construction would be illogical from the context; and

(4) Any action, representation or failure to act by the alternate authorized account representative when acting in that capacity shall be deemed to be an action of the authorized account representative, with all the rights, duties, and responsibilities pertaining thereto.

(e) *Changes to the general account authorized account representative.* An authorized account representative for a general account may be succeeded by any person who submits an application pursuant to § 73.31(c). The actions of an authorized account representative for a general account shall be binding on any successor.

(f) *Objections to the authorized account representative.* Except for a certification pursuant to paragraph (e) of this section, no objection or other communication submitted to the Administrator concerning any submission to the Administrator by the authorized account representative shall affect the recordation of transfers submitted by the authorized account representative pursuant to subpart D of this part. Neither the United States, the Administrator, nor any permitting authority will adjudicate any dispute between and among persons concerning any submission to the Administrator by the authorized account representative; any actions of the authorized account representative; or any other matter arising directly or indirectly from the certification, actions or representations of the authorized account representative.

§ 73.34 Recordation in accounts.

(a) *Recordation in compliance subaccounts.* At the beginning of 1995 and, in the case of each year thereafter, after the Administrator has made all deductions from an affected unit's compliance subaccount pursuant to § 73.35(b), the Administrator will record in the compliance subaccount the allowances held in the future year subaccount for the year corresponding to the current calendar year. The future year subaccount for the new 30th year will be established at the same time and include the allowances allocated for the unit for that year pursuant to subpart B of this part.

(b) *Recordation in current year subaccounts.* At the beginning of 1995 and each year thereafter, the Administrator will record in the current year subaccount the allowances held in the future year subaccount for the year corresponding to the current calendar year.

(c) *Recordation in subaccounts.* Allowances in each compliance, current year, and future year subaccounts will reflect:

(1) All allowances allocated or deducted for the unit for the year pursuant to subpart B of this part;

(2) All allowances allocated or deducted pursuant to §§ 72.41, 72.42, 72.43, and 72.44 and part 74 of this chapter;

(3) All allowances allocated pursuant to subparts F and G of this part;

(4) All allowances recorded as a result of purchases or returns from the annual auctions or direct sale pursuant to subpart E of this part;

(5) All allowances recorded or deducted as a result of allowance transfers recorded pursuant to subpart D of this part; and

(6) All allowances deducted or returned pursuant to §§ 73.35(d), 72.91 and 72.92, part 74, and part 77 of this chapter.

(d) *Serial numbers for allocated allowances.* Upon the allocation of allowances to an account, including allowances contained in reserves as provided in subpart B of this part, the Administrator will assign each allowance a unique identification number that will include digits identifying the allowance's compliance use date.

[58 FR 3691, Jan. 11, 1993, as amended at 60 FR 17114, Apr. 4, 1995]

§ 73.35 Compliance.

(a) *Allowance transfer deadline.* No allowance shall be deducted for purposes of compliance with an affected unit's sulfur dioxide Acid Rain emissions limitation requirements pursuant to title IV of the Act and paragraph (b) of this section unless:

(1) The compliance use date of the allowance is no later than the year in which the unit's SO_2 emissions occurred; and

(2) Such allowance is recorded in the compliance subaccount, or its transfer to the unit's compliance subaccount is submitted correctly pursuant to subpart D for recordation in the compliance subaccount for the unit by not later than the allowance transfer deadline of January 30 of the calendar year following the year for which compliance is being established in accordance with the requirements of subpart D of this part.

(b) *Deductions for compliance.* (1) Except as provided in paragraph (d) of this section, following the recordation of transfers submitted correctly for recordation in the compliance subaccount pursuant to paragraph (a) of this section and subpart D of this part, the Administrator will deduct allowances from each affected unit's compliance subaccount in accordance with the allowance deduction formula in § 72.95 of this chapter, or, for opt-in sources, the allowance deduction formula in § 74.49 of this chapter, and any correction made under § 72.96 of this chapter.

(2) The Administrator will make deductions until either the number of allowances deducted is equal to the amount calculated in accordance with § 72.95 of this chapter, or, for opt-in sources, in accordance with § 74.49 of this chapter, as modified under § 72.96 of this chapter or until no more allowances remain in the compliance subaccount.

(c)(1) *Identification of allowances by serial number.* By no later than sixty days after the end of the calendar year, the authorized account representative for each unit account may identify by serial number the allowances to be deducted from the compliance subaccount for purposes of compliance with the unit's sulfur dioxide emissions limitation requirements. Such identification shall be made pursuant to part 72 of this chapter.

(2) *First-in, first-out.* In the absence of an identification or in the case of a partial identification of allowances by serial number, as provided for in paragraph (b)(1) or (d) of this section, the Administrator will deduct allowances on a first-in, first-out (FIFO) accounting basis beginning with those allowances with the earliest compliance use date originally allocated for the unit and recorded in its compliance subaccount. Following the deduction of all originally allocated allowances from the compliance subaccount, the Administrator will deduct those allowances that were transferred and recorded in the unit's compliance subaccount pursuant to subpart D of this part, beginning with those with the earliest date of recordation.

(d) *Deductions for excess emissions.* Pursuant to § 77.4 of this chapter, and following the process of recordation set forth in § 73.34(a) of this part, the Administrator will deduct allowances for each unit with excess emissions for the preceding calendar year in an amount equal to the unit's excess emissions tonnage.

(e) *Deductions for units sharing a common emission stack.* In the case of units sharing a common emission stack and have emissions that are not individually monitored pursuant to part 75 of this chapter, the authorized account representative may identify the percentage of allowances to be deducted from each unit's compliance subaccount. Such identification shall be made pursuant to part 72, subpart I of this chapter. In the absence of an identification, the Administrator will deduct an equal percentage of allowances from each unit's compliance subaccount.

[58 FR 3691, Jan. 11, 1993, as amended at 60 FR 17114, Apr. 4, 1995]

§ 73.36 Banking.

(a) *Unit accounts.* Any allowance in a compliance subaccount not deducted pursuant to § 73.35 will remain in the compliance subaccount.

(b) *General accounts.* In the case of a general account, any allowances in the current year subaccount at the end of the current calendar year will remain in the current year subaccount.

§ 73.37 Account error and dispute resolution.

(a) *Claim of error.* The authorized account representative may notify the Administrator of any claim that the Administrator made an error in recording transfer information that was submitted correctly pursuant to subpart D of this part, provided that such claim of error notification is submitted to the Administrator by no later than 15 business days following the date mark of the notification by the Administrator pursuant to actions taken under § 73.37(d) or § 73.53. Such claim of error notification shall be in writing and shall include:

(1) A description of the error alleged to have been made by the Administrator;

(2) A proposed correction of the alleged error;

(3) Any supporting documentation or other information concerning the alleged error and proposed correction; and

(4) Certification by the signature of and the date of the signature of the authorized account representative.

The Administrator will not act on claim of error notifications received after the stated deadlines (except as provided under paragraph (f) of this section, or that do not contend that the Administrator made an error in recordation.

(b) *EPA action.* The Administrator, at the Administrator's sole discretion based on documentation provided, will determine what changes, if any, will be made to the accounts subject to the alleged error. Not later than 20 business days after receipt of a claim of error notification pursuant to paragraph (a) of this section, the Administrator will submit to the authorized account representative a written response stating:

(1) The determination made and any action taken by, the Administrator; and

(2) The reasons for such action.

(c) *Administrative appeals procedure.* Following the Administrator's action pursuant to paragraph (b) of this section, the authorized account representative may appeal the Administrator's action through the administrative appeals procedure pursuant to part 78 of this chapter.

(d) *EPA corrections.* The Administrator may, without prior notice of a claim of error and in the Administrator's sole discretion, correct any errors in any account on his or her own motion. The Administrator will notify the authorized account representative by no later than 20 business days following any such corrections.

(e) *Excess emissions requirements.* The filing of a claim of error notification pursuant to paragraph (a) of this section, or the pendency of the Administrator's action pursuant to paragraph (b) of this section, shall not affect a unit's obligations under part 77 of this chapter.

(f) *Waiver of deadline.* The Administrator may, in his or her discretion, accept claim of error submissions made following the deadlines imposed in this section upon a demonstration by the authorized account representative of good cause for the delay. The finding of whether good cause exists shall be in the sole discretion of the Administrator. Appeals of a decision by the Administrator under this paragraph will be addressed pursuant to the administrative appeals process in part 78 of this chapter.

§ 73.38 Closing of accounts.

(a) *General account.* The authorized account representative of a general account may instruct the Administrator to close the general account by submitting an allowance transfer, pursuant to § 73.50 and § 73.52, requesting the transfer of all allowances held in the account to one or more other accounts in the Allowance Tracking System, and by submitting in writing, with the signature of the authorized account representative, a request to delete the general account from the Allowance Tracking System.

(b) *Inactive accounts.* If a general account shows no activity for a period of a year or more and does not contain any allowances in its subaccounts, the Administrator will notify the account's authorized account representative that the account will be closed and eliminated from the Allowance Tracking System following 20 business days from the date the notice is sent. The account will be closed following the 20-day period, unless the Administrator receives and records a request for the transfer of allowances into the account pursuant to § 73.52 before the end of the 20-day period, or the authorized account representative submits, in writing, demonstration of good cause as to why the inactive account should not be closed. The finding of whether good cause exists shall be in the sole discretion of the Administrator.

Subpart D—Allowance Transfers

SOURCE: 58 FR 3694, Jan. 11, 1993, unless otherwise noted.

§ 73.50 Scope and submission of transfers.

(a) *Scope of transfers.* Except as provided in § 73.51 and § 73.52, the Administrator will record transfers of an allowance to and from Allowance Tracking System accounts, including, but not limited to, transfers of an allowance to and from contemporaneous future year subaccounts, and transfers of an allowance to and from compliance subaccounts and current year subaccounts, and transfers of all allowances allocated for a unit for each calendar year, in perpetuity.

(b) *Submission of transfers.* (1) Authorized account representatives seeking recordation of an allowance transfer shall request such transfer by submitting to the Administrator, in a format to be specified by the Administrator, an Allowance Transfer Form. To be considered correctly submitted the request for transfer shall include:

(i) The numbers identifying both the transferror and transferee accounts;

(ii) A specification by serial number of each allowance to be transferred, or correct indication on the allowance transfer where a request involves the transfer of the unit's allowances in perpetuity;

(iii) Signatures of the authorized account representatives of both the transferror and transferee accounts;

(iv) The dates of the signatures of the authorized account representatives;

(v) The numbers identifying the authorized account representatives for both the transferror and transferee account; and

(vi) Where the transferee account has not been established, information as required pursuant to § 73.31 (b) or (c).

(2) Transfers of allowances to or from compliance subaccounts submitted for recordation following the allowance transfer deadline will not be recorded until after completion of the process of recordation set forth in § 73.34(a).

§ 73.51 Prohibition.

Except as provided in § 73.34(a), the Administrator will not record a transfer of allowances from a future year subaccount to a subaccount for an earlier year.

§ 73.52 EPA recordation.

(a) *General recordation.* Except as provided in § 73.50, § 73.51, and this paragraph (a), the Administrator will record an allowance transfer by no later than five business days following receipt of an allowance transfer request pursuant to § 73.50, by moving each allowance from the transferror account to the transferee account as specified by the request pursuant to § 73.50, provided that:

(1) The information submitted pursuant to § 73.50 is complete;

(2) The transferror account includes each allowance identified by serial number in the allowance transfer request submitted pursuant to § 73.50, except when a request for transfer of the unit's allowances in perpetuity is indicated correctly on the allowance transfer submission;

(3) If the allowances identified by serial number specified pursuant to § 73.50(b)(1)(ii) are subject to the limitation on transfer imposed pursuant to § 72.44(h)(1)(i) of this chapter, § 74.42 of this chapter, or § 74.47(c) of this chapter, the transfer is in accordance with such limitation; and

(4) The transfer meets all applicable requirements of this subpart.

(b) Where an allowance transfer submitted for recordation fails to meet the requirements of this subpart, the Administrator will not record such transfer.

[58 FR 3694, Jan. 11, 1993, as amended at 60 FR 17114, Apr. 4, 1995]

§ 73.53 Notification.

(a) *Notification of recordation.* The Administrator will notify each party to an allowance transfer within five business days following the recordation of the transfer. Notice will be given in writing or in a format to be specified by the Administrator, to the authorized account representatives of both the transferror and transferee accounts.

(b) *Notification of non-recordation.* By no later than five business days following receipt of an allowance transfer request by the Administrator, the Administrator will notify, in writing or in

a format to be specified by the Administrator, the authorized account representatives of the accounts subject to the allowance transfer request submitted for recordation of:

(1) A decision not to record the transfer, and

(2) The reasons for such non-recordation.

(c) Nothing in this section shall preclude the submission of an allowance transfer request for recordation following notification of non-recordation.

Subpart E—Auctions, Direct Sales, and Independent Power Producers Written Guarantee

SOURCE: 56 FR 65601, Dec. 17, 1991, unless otherwise noted.

§73.70 Auctions.

(a) *Allowances to be auctioned.* Every year the Administrator will auction allowances from the Auction Subaccount, established pursuant to subpart B of this part, according to the following schedule:

TABLE I.—ALLOWANCE SCHEDULE FOR AUCTIONS

Year of purchase	Spot auction	Advance auction	Advance auction*
1993	50,000 [a]	100,000 [b]	
1994	50,000 [a]	100,000 [b]	25,000 [c]
1995	50,000 [a]	100,000 [b]	25,000 [c]
1996	150,000	100,000 [b]	25,000 [c]
1997	150,000	125,000 [b]	25,000 [c]
1998	150,000	125,000 [b]	
1999	150,000	125,000 [b]	
2000 and after	125,000	125,000 [b]	

[a] Not usable until 1995.
[b] Not usable until 7 years after purchase.
[c] Not usable until 6 years after purchase.
*These are unsold advance allowances from the direct sale program for 1993, 1994, 1995, and 1996 respectively.

In addition to the allowances listed above, the Administrator will auction allowances pursuant to paragraph (c) of this section and §73.72(q) in the amounts and at the times provided for therein.

(b) *Timing of the auctions.* The spot auction and the advance auction, and, if required pursuant to §73.72(q), an additional advance auction will be held on the same day, selected each year by the Administrator, but no later than March 31 of each year. The Administrator will conduct one spot auction and one advance auction, and, if required to §73.72(q), one additional advance auction in each calendar year.

(c) *Submittal for other allowances for auction.* Authorized account representatives may offer allowances for sale at auction, provided that allowances are dated for the year in which they are offered or for any previous year or for seven years following the year in which they are offered. Such authorized account representatives may specify a minimum price for the allowances offered at the auctions. The authorized account representative must notify the Administrator fifteen business days prior to the auctions, using the SO_2 Allowance Offer Form published by the Administrator, or by means of electronic communication if the Administrator, following public notice, so requires or permits at some future time. The notification shall include:

(1) The compliance use date of the allowances offered;

(2) The number of allowances to be sold and any other information identifying the allowances offered that may be required by subpart C of this part;

(3) Any minimum price in whole dollars; and

(4) Whether the authorized account representative is willing to sell fewer allowances than the number stated in paragraph (c)(2) of this section, if the full amount cannot be sold. After notification, the Administrator will deduct allowances from the appropriate Allowance Tracking System account from which allowances are being offered and place them in a separate subaccount for such allowances.

(d) *Conduct of the auctions.* (1) The Administrator will rank all bids in descending order of bid price starting with the highest. Allowances will be sold from the Auction Subaccount in this order at the amounts specified in the bids until there are no allowances in the subaccount. If all allowances are sold from the Auction Subaccount, including unsold allowances transferred from the preceding year's direct sale, and if bids still remain, the Administrator will sell allowances offered by the authorized account representatives, beginning with those offered at the lowest minimum price. Allowances offered at the lowest minimum price

will be matched with the highest bid remaining after the Auction Subaccount is exhausted. Sales of offered allowances, including, but not limited to, allowances offered by more than one offeror at the same minimum bid price, will continue in ascending order of minimum price, starting with the lowest, and descending order of remaining bids, starting with the highest, until:

(i) All allowances are sold,

(ii) No bids remain, or

(iii) Prices of remaining bids do not meet minimum prices required in remaining offers.

(2) In the event that there is more than one bid submitting the same price and the total number of allowances requested in all such bids exceeds the number of allowances remaining, the Administrator will award the remaining allowances by lottery to such bidders.

(3) In the event that there are more offers of sale at the minimum price than there are bids meeting that price, allowances from all such offers will be sold to cover the bids, according to each such offeror's pro rata share of all allowances so offered.

(4) In the event that fewer allowances remain than are requested in a bid, the Administrator will sell such remaining allowances to the bidder provided that, pursuant to § 73.71(b)(4), the bid states the bidder's willingness to purchase fewer allowances than requested in the bid.

(5) In the event that fewer than all allowances included in an offer for sale would be sold to remaining bids based on price, the Administrator will sell such allowances to the bidder(s), provided that, pursuant to § 73.70(c)(4), the offer states the offeror's willingness to sell fewer allowances than were offered for sale.

(e) *Announcement of results.* Following each auction, the Administrator will publish the names of winning bidders and their bids, the amounts of losing bids, and the lowest price at which allowances are sold. The Administrator will announce the results of each auction through the Allowance Tracking System. The results will also be published in the FEDERAL REGISTER and in the Commerce Business Daily.

(f) *Transfer of allowances.* Allowances will be transferred from the Auction Subaccount and from the subaccount for allowances offered by authorized account representatives to the Allowance Tracking System accounts of successful bidders as soon as payment is collected by the Administrator.

(g) *Return of unsuccessful bids.* The Administrator will return payment to unsuccessful bidders and to bidders unwilling to purchase fewer allowances than requested following the conclusion of each auction.

(h) *Transfer of proceeds.* The Administrator will return all proceeds from the auction as follows:

(1) Allowances auctioned from the Auction Subaccount. Not later than 90 days following each auction, the Administrator will pay a pro rata share of the proceeds of each auction to the authorized account representative of each unit from whose annual allowance allocation allowances were withheld for the purposes of establishing the Auction Subaccount. Each unit's pro rata share will be calculated pursuant to regulations to be promulgated under subpart B.

(2) Allowances contributed from others. Not later than 90 days following each auction, the Administrator will transfer the full amount of the proceeds of each sale of allowances offered by authorized account representatives to such representatives. Proceeds from the sale of allowances that were offered with the same specified minimum price will be distributed according to each such offeror's pro rata share of the sale of such allowances.

(3) The Administrator will pay no interest on any payment made pursuant to paragraphs (h) (1) and (2) of this section.

(i) *Return of unsold allowances.* The Administrator will return all unsold allowances from the auction as follows:

(1) Allowances in the Auction Subaccount. At the conclusion of each auction, the Administrator will transfer to the Allowance Tracking System account of each unit specified in paragraph (h)(1) of this section its pro rata share of any allowances remaining in the Auction Subaccount. Each unit's

pro rata share will be calculated pursuant to regulations to be promulgated under subpart B.

(2) Allowances contributed from others. At the conclusion of each auction, the Administrator will return unsold allowances to the appropriate offerors' Allowance Tracking System accounts. Any unsold allowances that were offered with the same specified minimum price will be distributed according to each such offeror's pro rata share of all such allowances offered.

[56 FR 65601, Dec. 17, 1991, as amended at 61 FR 28763, June 6, 1996]

§73.71 Bidding.

(a) *Who may participate in the auctions.* Any person may participate in the auctions by submitting a bid or bids pursuant to this section.

(b) *Bidding.* Sealed bids shall be sent to the Administrator using the Bid Form for SO_2 Allowance Auctions, or some method of electronic transfer if the Administrator, following public notice, so requires or permits at some future time. The bid form shall state:

(1) The number of allowances sought and the price;

(2) Whether spot or advance allowances are sought;

(3) Allowance Tracking System account number;

(4) Whether the bidder is willing to purchase fewer allowances than the number of allowances stated in (b)(1) of this section if the full amount is not available. Where the bidder holds no Allowance Tracking System account, a New Account/New Authorized Account Representative Form must accompany the bid. New account information shall include at a minimum: Name, address, telephone number, facsimile number, organization or company name (if applicable), type of organization, and the authorized account representative for purposes of the account.

(c) *Payment.* Each bid must include a certified check or letter of credit for the total bid price, or may specify a method of electronic transfer or other method of payment, if the Administrator, following public notice, so requires or permits at some future time. The certified check should be made payable to the U.S. EPA. To meet the requirements of this paragraph bidders must submit a completed SO_2 Allowance Auction Letter of Credit Form. If such Form is used, the Administrator must receive full payment for allowances awarded at the auctions, either by wire transfer or certified check, no later than 2 business days after the results of the auction are announced in the Allowance Tracking System.

(d) *Bid amount and number of bids.* Bidders may request any number of allowances up to the amount of allowances available for auction. Any person may submit more than one bid in each auction, provided that each bid meets the requirements of this section.

(e) *Submission of bids.* The Administrator will publish in the FEDERAL REGISTER and in the Commerce Business Daily the address of where to submit bids and payment not later than 60 calendar days before each auction.

(f) *Deadline for bids.* All bids must be revised by the Administrator no later than 3 business days prior to the date of the auctions.

§73.72 Direct sales.

Allowances that were formerly part of the direct sale program, which has been terminated under §73.73(b), will be included in the annual allowance auctions in accordance with §73.70(a).

[61 FR 28763, June 6, 1996]

§73.73 Delegation of auctions and sales and termination of auctions and sales.

(a) *Delegation.* The Administrator may, in the Administrator's discretion, by delegation or contract provide for the conduct of sales or auctions under the Administrator's supervision by other departments or agencies of the United States Government or by nongovernmental agencies, groups, or organizations.

(b) *Termination of sales.* If the Administrator determines that, during any period of 2 consecutive calendar years, fewer than 20 percent of the allowances available in the subaccount for direct sales have been purchased, the Administrator shall terminate the Direct Sale Subaccount and transfer such allowances to the Auction Subaccount.

(c) *Termination of auctions.* The Administrator may, in the Administrator's discretion, terminate the withholding of allowances and the auctions if the Administrator determines, that, during any period of 3 consecutive years after 2002, fewer than 20 percent of the allowances available in the Auction Subaccount have been purchased.

Subpart F—Energy Conservation and Renewable Energy Reserve

SOURCE: 58 FR 3695, Jan. 11, 1993, unless otherwise noted.

§ 73.80 Operation of allowance reserve program for conservation and renewable energy.

(a) *General.* The Administrator will allocate allowances from the Conservation and Renewable Energy Reserve (the ''Reserve'') established under subpart B based on verified kilowatt hours saved through the use of one or more qualified energy conservation measures or based on kilowatt hours generated by qualified renewable energy generation. Allowances will be allocated to applicants that meet the requirements of this subpart according to the formulas specified in § 73.82(d), and in the order in which applications are received, except where provided for in § 73.84 and § 73.85, until a total of 300,000 allowances have been allocated.

(b) *Period of applicability.* Allowances will be allocated under this subpart for qualified energy conservation measures or renewable energy generation sources that are operational on or after January 1, 1992, and before the date on which any unit owned or operated by the applicant becomes a Phase I unit or a Phase II unit.

(c) *Termination of the Reserve.* The Administrator will reallocate any allowances remaining in the Reserve after January 2, 2010 to the affected units from whom allowances were withheld by the Administrator, in accordance with section 404(g), for purposes of establishing the Reserve. Each unit's allocation under this paragraph will be calculated as follows:

$$\frac{\text{Remaining allowances in the Reserve} \times \text{Unit's allowances withheld}}{\text{Total amount in Reserve}}$$

(Allowances will be rounded to the nearest allowance)

[58 FR 3695, Jan. 11, 1993; 58 FR 40747, July 30, 1993]

§ 73.81 Qualified conservation measures and renewable energy generation.

(a) *Qualified energy conservation measures.* A qualified energy conservation measure is a demand-side measure not operational until the period of applicability, implemented in the residence or facility of a customer to whom the utility sells electricity, that:

(1) Is specified in appendix A(1) of this subpart; or

(2) In the case of a device or material that is not included in appendix A(1) of this subpart,

(i) Is a cost-effective demand-side measure consistent with an applicable least-cost plan or least-cost planning process that increases the efficiency of the customer's use of electricity (as measured in accordance with § 73.82(c)) without increasing the use by the customer of any fuel other than qualified renewable energy, industrial waste heat, or, pursuant to paragraph (b)(5) of this section, industrial waste gases;

(ii) Is implemented pursuant to a conservation program approved by the utility regulatory authority, which certifies that it meets the requirements of paragraph (a)(2)(i) of this section and is not excluded by paragraph (b) of this section; and

(iii) Is reported by the applicant in its application to the Reserve.

(b) *Non-qualified energy conservation measures.* The following energy conservation measures shall not qualify for Allowance Reserve allocations:

(1) Demand-side measures that were operational before January 1, 1992;

(2) Supply-side measures;

(3) Conservation programs that are exclusively informational or educational in nature;

(4) Load management measures that lead to economic reduction of electric energy demand during a utility's peak generating periods, unless kilowatt

hour savings can be verified by the utility pursuant to §73.82(c); or

(5) Utilization of industrial waste gases, unless the applicant has certified that there is no net increase in sulfur dioxide emissions from such utilization.

(c) *Qualified renewable energy generation.* Qualified renewable energy generation is electrical energy generation, not operational until the period of applicability, that:

(1) Is specified in appendix A(3) of this subpart; or

(2) In the case of renewable energy generation that is not included in appendix A(3) of this subpart is#:

(i) Consistent with a least cost plan or a least cost planning process and derived from biomass (*i.e.,* combustible energy-producing materials from biological sources which include wood, plant residues, biological wastes, landfill gas, energy crops, and eligible components of municipal solid waste), solar, geothermal, or wind resources;

(ii) Implemented pursuant to approval by the utility regulatory authority, which certifies that it meets the requirements of paragraphs (c)(2)(i) and (c)(2)(ii) of this section and is not excluded by paragraph (d) of this section; and

(iii) Is reported by the applicant in its application to the Reserve.

(d) *Non-qualified renewable energy generation.* The following renewable energy generation shall not qualify for Allowance Reserve allocations:

(1) Renewable energy generation that was operational before January 1, 1992;

(2) Measures that reduce electricity demand for a utility's customers without providing electric generation directly for sale to customers; and

(3) Measures that appear on the list of qualified energy conservation measures in Appendix A(1) of this subpart.

[58 FR 3695, Jan. 11, 1993; 58 FR 40747, July 30, 1993]

§73.82 Application for allowances from reserve program.

(a) *Application Requirements.* Each application for Conservation and Renewable Energy Reserve allowances, shall:

(1) Certify that the applicant is a utility;

(2) Demonstrate that the applicant, any subsidiary of the applicant, or any subsidiary of the applicant's holding company, is an owner or operator, in whole or in part, of at least one Phase I or Phase II unit by including in the application the name and Allowance Tracking System account number of a Phase I or Phase II unit which it owns or operates and for which it is listed as an owner or operator on the certificate of representation submitted by the designated representative for the unit pursuant to §72.20 of this chapter;

(3) Through certification, demonstrate that the applicant is paying in whole or in part for one or more qualified energy conservation measures or qualified renewable energy generation (that became operational during the period of applicability) either directly or through payment to another person that purchases the qualified energy conservation measure or qualified renewable energy generation;

(4) Demonstrate that the applicant is subject to a least cost plan or a least cost planning process that:

(i) provides an opportunity for public notice and comment or other public participation processes;

(ii) evaluates the full range of existing and incremental resources in order to meet expected future demand at lowest system cost;

(iii) treats demand-side resources and supply-side resources on a consistent and integrated basis;

(iv) takes into account necessary features for system operation such as diversity, reliability, dispatchability, and other factors of risk;

(v) may take into account other factors, including the social and environmental costs and benefits of resource investments; and

(vi) is being implemented by the applicant to the maximum extent practicable.

(5) Demonstrate that the qualified energy conservation measure adopted or qualified renewable energy generated, or both, are consistent with the least cost plan or least cost planning process;

(6) If the applicant is subject to the rate-making jurisdiction of a State or local utility regulatory authority, its least cost plan or least cost planning

process has been approved or accepted by the utility regulatory authority in the State or locality in which the qualified conservation measure(s) are adopted or in which the qualified renewable energy generation is utilized, and such State or local utility regulatory authority certifies that the least-cost plan or least-cost planning process meets the requirements of paragraph (a)(4) of this section;

(7) If the applicant is not subject to the rate-making jurisdiction of a State or local regulatory authority, its least cost plan or least cost planning process has been approved or has been accepted by the utility regulatory authority with rate-making jurisdiction over the applicant, and such utility regulatory authority certifies that the least cost plan or least cost planning process meets the requirements of paragraph (a)(4) of this section;

(8) If the applicant is an independent power production facility that sells qualified renewable energy generation to another utility, the applicant has enclosed documentation that such qualified renewable energy generation was purchased pursuant to the purchasing utility's least cost plan or least cost planning process, which has been approved or accepted by the purchasing utility's utility regulatory authority.

(9)(i) If the applicant is an investor-owner utility subject to the rate-making jurisdiction of a State utility regulatory authority and is submitting an application on the basis of one or more qualified energy conservation measures, such State utility regulatory authority has established a procedure for determining rates and charges ensuring net income neutrality, as defined in § 72.2 of this chapter, including a provision that the utility's net income is compensated in full (considering factors such as risk) for lost sales attributable to the utility's conservation programs, which may include:

(A) General ratemaking for formulas that decouple utility profits from actual utility sales;

(B) Specific rate adjustment formulas that allow a utility to recover in its retail rates the full costs of conservation measures plus any associated net revenues lost as a result of reduced sales resulting from conservation initiatives; or

(C) Conservation incentive mechanisms designed to provide positive financial rewards to a utility to encourage implementation of cost-effective measures;

(ii) Provided that the existence of any one of the categories of rate-making or rate adjustment formulas or conservation incentive mechanisms specified in paragraph (a)(9)(i) of this section shall not necessarily constitute fulfillment of the net income neutrality requirement unless, pursuant to § 73.83, the Secretary of Energy has certified the establishment of such net income neutrality;

(10) Demonstrate that the applicant has implemented the qualified energy conservation measures or used the qualified renewable energy generation specified in the application during the period of applicability;

(11) Demonstrate the extent to which installation of the qualified conservation measure(s) has achieved actual energy savings, by stating, on the basis of the performance of the measure(s) following installation:

(i) The amount of kilowatt hour savings resulting from the measure(s) in the given year(s);

(ii) Pursuant to paragraph (c) of this section, the methodology used to calculate the kilowatt hour savings; and

(iii) The name, address, and phone number of the person who performed the calculation of kilowatt hour savings;

(12) Report the type and amount of yearly qualified renewable energy generation, by stating (and submitting documentation, including copies of plant operation records, supporting such statements) the kilowatt hours of qualified renewable energy generated during a previous calendar year or years; and

(13) Report the extent to which qualified renewable energy generation was produced in combination with other energy sources (hereafter ''hybrid generation'') by stating (and submitting documentation, including copies of plant operation records, supporting such statements) the heat input and heat rate of the non-qualified renewable generation, the total annual kilowatt

hours generated, and the kilowatt hours that can be attributed to qualified renewable energy generation;

(14) Demonstrate the extent to which the implementation of qualified energy conservation measures or the use of qualified renewable energy generation has resulted in avoided tons of sulfur dioxide emissions by the utility during the period of applicability, pursuant to paragraph (d) of this section.

(b) *Application to the Secretary of Energy*. For purposes of paragraph (a)(9) of this section, the applicant shall fulfill the following requirements:

(1) If a utility applying for allowances from the Reserve has not received certification of net income neutrality from the Secretary of Energy or such certification is no longer applicable, the applicant shall submit to the Secretary of Energy:

(i) A copy of the relevant State utility regulatory authority's final order or decision setting forth the approved ratemaking mechanisms that ensure that a utility's net income will be at least as high upon implementation of energy conservation measures as such net income would have been if the energy conservation measures has not been implemented;

(ii) A description of how the State utility regulatory authority's order or decision meets the definition of net income neutrality as defined in § 72.2; and

(iii) Any additional information necessary for Secretary of Energy to certify that the State regulatory authority has established rates and charges that ensure net income neutrality.

(2) If a utility applying for allowances from the Reserve has already received certification of net income neutrality from the Secretary of Energy in connection with a previous application for allowances, and the ratemaking methods or procedures that ensure net income neutrality have not been altered, the applicant shall certify that the ratemaking methods and procedures that led to the original certification are still in place.

(c) *Verification of energy savings methodology*. For the purposes of paragraph (a)(11) of this section:

(1) Applicants subject to the ratemaking jurisdiction of a State utility regulatory authority shall use the energy conservation verification methodology approved by such authority in support of energy conservation applications under this subpart and part 72 of this chapter, provided that

(i) The authority in question uses this methodology to determine the applicant's entitlement to performance-based rate adjustments, which permit a utility's rates to be adjusted for additional kilowatt hours saved due to the utility's energy conservation programs;

(ii) Such performance based rate adjustments are subject to modification either prospectively or retrospectively to reflect periodic evaluations of energy savings secured by the applicant; and

(iii) The applicant has provided the Administrator with a description of the State utility regulatory authority's verification methodology and documentation that the requirements of this paragraph (e) have been met.

(2) All other applicants, including applicants whose rates are not subject to the ratemaking jurisdiction of a State utility regulatory authority shall demonstrate to the satisfaction of the Administrator through submission of documentation that savings have been achieved and may use the EPA Conservation Verification Protocol.

(3) All records of verification of energy savings shall be kept on file by the applicant for a period of 3 years. The Administrator may extend this period for cause at any time prior to the end of 3 years by notifying the applicant in writing.

(4) The Administrator reserves the right to conduct independent reviews, analyses, or audits to ascertain that the verification is valid and correct. If the Administrator determines that the verification is not valid or correct, the Administrator may revise the allocation of allowances to an applicant or require the surrender of allowances from the applicant's Allowance Tracking System account.

(d) *Calculation of allowances to be allocated*.

(1) In the case of an application submitted on the basis of qualified energy conservation measures, the sulfur dioxide emissions tonnage deemed avoided

for any calendar year shall be equal to the product of:

$$\frac{(A)\times(B)}{2000\ \text{lbs./ton}}$$

(Rounded to the nearest ton)

Where:

(A)=the kilowatt hours that were not, but would otherwise have been, supplied by the utility during such year in the absence of such qualified energy conservation measures.

(B)=0.004 1bs. of sulfur dioxide per kilowatt hour.

(2) In the case of an application submitted on the basis of qualified renewable energy generation, the sulfur dioxide emissions tonnage deemed avoided for any calendar year shall be equal to the product of:

$$\frac{(A)\times(B)}{2000\ \text{lbs./ton}}$$

(Rounded to the nearest ton)

Where:

(A)=the actual kilowatt hours of qualified renewable energy generated or purchased by the applicant (based on the qualified renewable energy generation portion for hybrid generation).

(B)=0.004 lbs. of sulfur dioxide per kilowatt hour.

(e) *Certification by Applicant's Certifying Official.*

(1) Certification of all application requirements, including the net income neutrality requirements, shall be made by a certifying official of the applicant upon such official's verification of all information and documentation submitted.

(2) The applicant shall submit a certification statement signed by the applicant's certifying official that reads ''I certify under penalty of law that I have personally examined and am familiar with the information submitted in this document and all its attachments. Based on my inquiry of those individuals with primary responsibility for obtaining the information, I certify that the information is to the best of my knowledge and belief true, accurate, and complete. I am aware that there are significant penalties for submitting false material information, or omitting material information, including the possibility of fine or imprisonment for violations.''

(f) *Certification by State Utility Regulatory Authority.* Applicants subject to the ratemaking jurisdiction of a State utility regulatory authority shall include in their applications a certification by the State utility regulatory authority's certifying official that it has reviewed the application, including supporting documentation, and finds it to be accurate, complete, and consistent with all applicable requirements of this subpart.

(g) *Time period to apply.* (1) Beginning no earlier than July 1, 1993, and no earlier than July 1 of each subsequent year, applicants may apply to the Administrator for allowances from the Reserve for emissions avoided in a previous year or years by use of qualified energy conservation measures or qualified renewable energy generation that became operational during the period of applicability; and

(2) Beginning no earlier than January 1, 1993, any applicant may apply to the Secretary of Energy for the Secretary's certification of net income neutrality where the application is based on the use of one or more qualified energy conservation measures.

(3) Applications will be received by the Administrator and the Secretary of Energy until January 2, 2010, pursuant to § 73.80(c), or until no allowances remain in the Reserve.

(h) *Submittal location.* Applicants shall submit one copy of the completed Reserve application, not including the net income neutrality application, via registered mail to the Administrator at an address to be specified in later guidance. Applicants shall submit 10 copies of the net income neutrality application via registered mail to the Department of Energy at the following address: Department of Energy, Office of Conservation and Renewable Energy, Mail Stop CE–10, Room 6c–036, 1000 Independence Avenue, SW., Washington, DC 20585, Attn: Net Income Neutrality Certification.

[58 FR 3695, Jan. 11, 1993; 58 FR 40747, July 30, 1993]

§73.83 Secretary of Energy's action on net income neutrality applications.

(a) *First come, first served.* The Secretary of Energy will process and certify net income neutrality applications on a ''first-come, first served'' basis, according to the order, by date and time, in which they are received from either the applicant or, in the case of an application submitted to the Administrator and then forwarded to the Secretary, from the Administrator.

(b) *Deficient applications.* If the Secretary of Energy determines that the net income neutrality certification application does not meet the requirements of §73.82 (a)(9) and (b), the Secretary will notify the applicant and the Administrator in writing of the deficiency. The applicant may then supply additional information or a new revised application as necessary for the Secretary to make a determination that the applicant meets the requirements of §73.28(a)(9) and (b). Additional information or revised applications will be processed according to the date of receipt of such information or revisions.

(c) *Notification of approval.* The Secretary of Energy will review the net income neutrality application to determine whether it meets the requirements of §73.82 (a)(9) and (b) and will certify this finding in writing to the applicant and to the Administrator within 60 calendar days of receipt of the net income neutrality application or a revised application, except that the Secretary may specify a later date for certification.

§73.84 Administrator's action on applications.

(a) *First come, first served.* The Administrator will process and approve Allowance Reserve applications, in whole or in part, on a ''first-come, first-served'' basis as established by the order of date of receipt, provided that the Administrator shall not allocate more than a total of 30,000 allowances in connection with applications based on any one of the four categories of qualified renewable energy generation enumerated in §73.81(c)(2)(i) and Appendix A(3.1–3.4).

(b) *Deficient applications.* An application is deficient and will be returned by the Administrator if it fails to meet the requirements set forth in this subpart, including those set forth in §73.82. A revised application that is submitted after being returned for failure to meet the requirements of this subpart will be processed according to the date of receipt of the revised application.

(c) *Notification of approval.* Applications that the Administrator determines to be complete and correct will be conditionally approved, subject to notification to EPA of a net income neutrality certification from the Department of Energy, within 120 calendar days of receipt. Allowances from the Reserve will be awarded subject to the Department of Energy certification, or, if a DOE certification has already been issued to the applicant, allocated to applicants from such applications depending on the availability of allowances in the Reserve. In the event the initial application approval is conditioned upon the Secretary of Energy's certification, final approval will be granted upon notification of certification by the Secretary of Energy pursuant to §73.83. The Administrator will notify applicants of final approval in writing.

(d) *Allocation of allowances.* Beginning in 1995, the Administrator will allocate allowances from the Reserve for each approved application into the applicant's account or accounts in the Allowance Tracking System. If the applicant does not have an account in the Allowance Tracking System, or wishes to open a new account for the allowances from the Reserve, an application pursuant to §73.31(c) must accompany the application for Reserve allowances.

(e) *Partial fulfillment of requests.* (1) In the event that the allowances available in the Reserve are less than the number that could otherwise be allocated to an approved applicant's account under the application as approved, the applicant will receive the allowances remaining in the Reserve.

(2) In the event that a subaccount is established by EPA, pursuant to §73.85, and the applicant is making a request for allowances not included in the subaccount, the Allowance Reserve allocations for the approved applicant will be made, in addition to any that may be allocated pursuant to paragraph (f)(3)

of this section, from any allowances remaining in the Reserve that are not contained in the subaccount.

(f) *Oversubscription of the Reserve.*

(1) In the event that the Reserve becomes oversubscribed by more than one applicant on a single day, the allowances remaining in the Reserve will be distributed on a pro rata basis to applicants meeting the requirements of § 73.82.

(2) If Reserve applications are received by the Administrator after all allowances from the Reserve have been allocated, the Administrator will so notify the applicant within 5 business days after receipt of the application.

(3) In the event that applications meeting the requirements pursuant to § 73.82 are received by the Administrator prior to February 1, 1998, and

(i) All remaining allowances in the Reserve have been placed in a subaccount pursuant to § 73.85; and

(ii) The applicant is not eligible for an allocation of allowances from the subaccount; the application will be placed on a waiting list in order of receipt.

(iii) The Administrator will notify the applicant of such action within 5 business days after receipt of the application.

(4) If any allowances are returned to the Reserve after February 1, 1998 pursuant to § 73.85(c), the Administrator will review the wait-listed applications in order of receipt and allocate any remaining allowances to the approved applicants in the order of their receipt until no more allowances remain in the Reserve.

(g) *Applications for allowances based on the same avoided emissions from the same energy conservation measures or renewable energy generation.*

(1) The Administrator will not award allowances to more than one applicant for the same avoided emissions from the same energy conservation measure or the same qualified renewable energy generation, and will process and act on such duplicative applications on a ''first-come, first-serve'' basis as determined by the order of date of receipt.

(2) Any allowances awarded pursuant to two or more applications received on the same date based on the same avoided emissions from the same energy conservation measure or the same renewable electric generation will be divided equally between all such applicants unless the Administrator is otherwise directed by all such applicants.

§ 73.85 Administrator review of the reserve program.

(a) *Administrator review of the Reserve and creation of a subaccount.* In the event that an allocation of allowances from the Reserve pursuant to a pending application would bring the total number of allowances allocated to a number greater than 240,000, the Administrator will review the distribution of all allowances allocated as follows:

(1) If at least 60,000 allowances have been allocated from the Reserve for *each* of

(i) Qualified energy conservation measures, and

(ii) Qualified renewable energy generation, allocations of allowances will continue pursuant to § 73.82, until no more allowances remain in the Reserve.

(2) If fewer than 60,000 allowances have been allocated for either qualified energy conservation measures or qualified renewable energy generation, the Administrator will establish a subaccount for the allocation of allowances for applications based on the category for which fewer than 60,000 allowances have been allocated. The subaccount will contain allowances equal to 60,000 less the number of allowances previously allocated for such category.

(b) *Allocation of allowances from the subaccount.* The Administrator will allocate allowances from the subaccount established pursuant to paragraph (a) of this section to approved and DOE certified applicants that fulfill the requirements of this subpart, including § 73.82 and § 73.83, on a ''first-come, first-served basis'', pursuant to § 73.84(a), until the subaccount is depleted or closed pursuant to paragraph (c) of this section.

(c) *Closure of the subaccount.* Unless all allowances in the subaccount have been previously allocated, the Administrator will terminate the subaccount not later than February 1, 1998 and return any allowances remaining in the subaccount to the general account of

the Reserve. After all Reserve allocations have been made to applicants with approved and DOE certified applications subject to §73.84(f)(3), the Administrator will allocate any remaining allowances to any applicants that meet the requirements of this subpart, including §73.82 and §73.83, on a ''first-come, first-served'' basis, pursuant to §73.84.

§73.86 State regulatory autonomy.

Nothing in this Subpart shall preclude a state or state regulatory authority from providing additional incentives to utilities to encourage investment in any conservation measures or renewable energy generation.

APPENDIX A TO SUBPART F—LIST OF QUALIFIED ENERGY CONSERVATION MEASURES, QUALIFIED RENEWABLE GENERATION, AND MEASURES APPLICABLE FOR REDUCED UTILIZATION

1. Demand-side Measures Applicable for the Conservation and Renewable Energy Reserve Program or Reduced Utilization

The following listed measures are approved as ''qualified energy conservation measures'' for purposes of the Conservation and Renewable Energy Reserve Program or reduced utilization qualified energy conservation plans under §72.43 of this chapter. Measures not appearing on the list may also be qualified conservation measures if they meet the requirements specified in §73.81(a) of this part.

1.1 Residential

1.1.1 Space Conditioning

- Electric furnace improvements (intermittent ignition, automatic vent dampers, and heating element change-outs)
- Air conditioner (central and room) upgrades/replacements
- Heat pump (ground source, solar assisted, and conventional) upgrades/replacements
- Cycling of air conditioners and heat pumps
- Natural ventilation
- Heat recovery ventilation
- Clock thermostats
- Setback thermostats
- Geothermal steam direct use
- Improved equipment controls
- Solar assisted space conditioning (ventilation, air-conditioning, and desiccant cooling)
- Passive solar designs
- Air conditioner and heat pump clean and tune-up
- Heat pipes
- Whole house fans
- High efficiency fans and motors
- Hydronic pump insulation
- Register relocation
- Register size and blade configuration
- Return air location
- Duct sizing
- Duct insulation
- Duct sealing
- Duct cleaning
- Shade tree planting

1.1.2 Water Heating

- Electric water heater upgrades/replacements
- Electric water heater tank wraps/blankets
- Low-flow showerheads and fittings
- Solar heating and pre-heat units
- Geothermal heating and pre-heat units
- Heat traps
- Water heater heat pumps
- Recirculation pumps
- Setback thermostats
- Water heater cycling control
- Solar heating for swimming pools
- Pipe wrap insulation

1.1.3 Lighting

- Lamp replacement
- Dimmers
- Motion detectors and occupancy sensors
- Photovoltaic lighting
- Fixture replacement
- Outdoor lighting controls

1.1.4 Building Envelope

- Attic, basement, ceiling, and wall insulation
- Passive solar building systems
- Exterior roof insulation
- Exterior wall insulation
- Exterior wall insulation bordering unheated space (e.g., a garage)
- Knee wall insulation in attic
- Floor insulation
- Perimeter insulation
- Storm windows/doors
- Caulking/weatherstripping
- Multi-glazed inserts for sliding glass doors
- Sliding door replacements
- Installation of French doors
- Hollow core door replacement
- Radiant barriers
- Window vent conversions
- Window replacement
- Window shade screens
- Low-e windows
- Window reduction
- Attic ventilation
- Whole house fan
- Passive solar design

1.1.5 Other Appliances

- Refrigerator replacements
- Freezer replacements
- Oven/range replacements
- Dishwasher replacements
- Clothes washer replacements
- Clothes dryer replacements
- Customer located power generation based on photovoltaic, solar thermal, biomass, wind or geothermal resources

- Swimming pool pump replacements
- Gasket replacements
- Maintenance/coil cleaning

1.2 Commercial

1.2.1 Heating/Ventilation/Air Conditioning (HVAC)

- Heat pump replacement
- Fan motor efficiency
- Resizing of chillers
- Heat pipe retrofits in air conditioning units
- Dehumidifiers
- Steam trap insulation
- Radiator thermostatic valves
- Variable speed drive on fan motor
- Solar assisted HVAC including ventilation, chillers, heat pumps, and desiccants
- HVAC piping insulation
- HVAC ductwork insulation
- Boiler insulation
- Automatic night setback
- Automatic economizer cooling
- Outside air control
- Hot and cold deck automatic reset
- Reheat system primary air optimization
- Process heat recovery
- Deadband thermostat
- Timeclocks on circulating pumps
- Chiller system
- Increase condensing unit efficiency
- Separate make-up air for exhaust hoods
- Variable air volume system
- Direct tower cooling (chiller strainer cycle)
- Multiple chiller control
- Radiant heating
- Evaporative roof surface cooling
- Cooling tower flow control
- Ceiling fans
- Evaporative cooling
- Direct expansion cooling system
- Heat recovery ventilation (water and air-source)
- Set-back controls for heating/cooling
- Make-up air control
- Manual fan switches
- Energy saving exhaust hood
- Night flushing
- Spot radiant heating
- Terminal regulated air volume control scheme
- Variable speed motors for HVAC system
- Waterside economizers
- Airside economizer
- Gray water systems
- Well water for cooling

1.2.2 Building envelope

- Insulation
- Wall insulation
- Floor/slab insulation
- Roof insulation
- Window and door upgrades, replacements, and films (to reduce solar heat gains)
- Passive solar design
- Earth berming
- Shading devices and tree planting
- High reflectivity roof coating
- Evaporative cooling
- Infiltration reduction
- Weatherstripping
- Caulking
- Low-e windows
- Multi-glazed windows
- Replace glazing with insulated walls
- Thermal break window frames
- Tinted glazing
- Vapor barrier
- Vestibule entry

1.2.3 Lighting

- Electronic ballast replacements
- Delamping
- Reflectors
- Occupancy sensors
- Daylighting with controls
- Photovoltaic lighting
- Efficient exterior lighting
- Manual selective switching
- Efficient exit signs
- Daylighting construction
- Cathode cutout ballasts
- High intensity discharge luminaries
- Outdoor light timeclock and photocell

1.2.4 Refrigeration

- Refrigerator replacement
- Freezer replacement
- Optimize heat gains to refrigerated space
- Optimize defrost control
- Refrigeration pressure optimization control
- High efficiency compressors
- Anti-condensate heater control
- Floating head pressure
- Hot gas defrost
- Parallel unequal compressors
- Variable speed compressors
- Water cooler controls
- Waste heat utilization
- Air doors on refrigeration equipment

1.2.5 Water Heating

- Electric water heating upgrades/replacements
- Electric water heater wraps/blankets
- Pipe insulation
- Solar heating and/or pre-heat units
- Geothermal heating and/or pre-heat units
- Circulating pump control
- Point-of-use water heater
- Heat recovery domestic water heater (DWH) system
- Chemical dishwashing system
- End-use reduction using low-flow fittings

1.2.6 Other end-uses and miscellaneous

- Energy management control systems for building operations
- Customer located power based on photovoltaic, solar thermal, biomass, wind, and geothermal resources
- Energy efficient office equipment
- Customer-owned transformer upgrades and proper sizing

1.3 Industial

1.3.1 Motors

- Retire inefficient motors and replace with energy efficient motors, including the

use of electronic adjustable speed or variable frequency drives
• Rebuild motors to operate more efficiently through greater contamination protection and improved magnetic materials
• Install self-starters
• Replace improperly sized motors
1.3.2 Lighting
• Electronic ballast replacement/improvement
• Electromagnetic ballast upgrade
• Installation of reflectors
• Substitution of lamps with built-in automatic cathode cut-out switches
• Modify ballast circuits with additional impedance devices
• Metal halide and high pressure sodium lamp retrofits
• High pressure sodium retrofits
• Daylighting with controls
• Occupancy sensors
• Delamping
• Photovoltaic lighting
• Two step and dimmable high intensity discharge ballast
1.3.3 Heating/Ventilation/Air Conditioning (HVAC)
• Heat pump replacement/upgrade
• Furnace upgrade/replacement
• Fan motor efficiency
• Resizing of chillers
• Heat pipe retrofits on air conditioners
• Variable speed drive on fan motor
• Solar assisted HVAC including ventilation, chillers, heat pumps and desiccants
1.3.4 Industrial Processes
• Upgrades in heat transfer equipment
• Insulation and burner upgrades for industrial furnaces/ovens/boilers to reduce electricity loads on motors and fans
• Insulation and redesign of piping
• Upgrades/retrofits in condenser/evaporation equipment
• Process air and water filtration for improved efficiency
• Upgrades of catalytic combustors
• Solar process heat
• Customer located power based on photovoltaic, solar thermal, biomass, wind, and geothermal resources
• Power factor controllers
• Utilization of waste gas fuels
• Steam line and steam trap repairs/upgrades
• Compressed air system improvements/repairs
• Industrial process heat pump
• Optimization of equipment lubrication or maintenance
• Resizing of process equipment for optimal energy efficiency
• Use of unique thermodynamic power cycles
1.3.5 Building Envelope
• Insulation of ceiling, walls, and ducts
• Window and door replacement/upgrade, including thermal energy barriers
• Caulking/weatherstripping
1.3.6 Water Heating
• Electric water heater upgrades/replacements
• Electric water heater wraps/blankets
• Pipe insulation
• Low-flow showerheads and fittings
• Solar heating and pre-heat units
• Geothermal heating and pre-heat units
1.3.7 Other End-uses and miscellaneous
• Refrigeration system retrofit/replacement
• Energy management control systems and end use metering
• Customer-owned transformer retrofits/replacements and proper sizing
1.4 Agricultural
1.4.1 Space Conditioning
• Building envelope measures
• Efficient HVAC equipment
• Heat pipe retrofit on air conditioners
• System and control measures
• Solar assisted HVAC including ventilation, chillers, heat pumps, and desiccants
• Air-source and geothermal heat pumps replacement/upgrades
1.4.2 Water heating
• Upgrades/replacements
• Water heater wraps/blankets
• Pipe insulation
• Low-flow showerheads and fittings
• Solart heating and/or pre-hear units
• Geothermal heating and/or pre-heat units
1.4.3 Lighting
• Electronic ballast replacements
• Delamping
• Reflectors
• Occupancy sensors
• Daylighting with controls
• Photovoltaic lighting
• Outdoor lighting controls
1.4.4 Pumping/Irrigation
• Pump upgrades/retrofits
• Computerized pump control systems
• Irrigation load management strategies
• Irrigation pumping plants
• Computer irrigation control
• Surge irrigation
• Computerized scheduling of irrigation
• Drip irrigation systems
1.4.5 Motors
• Retire inefficient motors and replace with energy efficient motors, including the use of electronic adjustable speed and variable frequency drives
• Rebuild motors to operate more efficiently through greater contamination protection and improved magnetic materials
• Install self-starters
• Replace improperly sized motors
11.4.6 Other end uses
• Ventilation fans
• Cooling and refrigeration system upgrades
• Grain drying using unheated air
• Grain drying using low temperature electric

• Customer-owned transformer retrofits/replacements and proper sizing
• Programmable controllers for electrical farm equipment
• Controlled livestock ventilation
• Water heating for production agriculture
• Milk cooler heat exchangers
• Direct expansion/ice bank milk cooling
• Low energy precision application systems
• Heat pump crop drying

1.5 Government Services Sector

1.5.1 Streetlighting

• Replace incandescent and mercury vapor lamps with high pressure sodium and metal halide

1.5.2 Other

• Energy efficiency improvements in motors, pumps, and controls for water supply and waste water treatment
• District heating and cooling measures derived for cogeneration that result in electricity savings

2. Supply-side Measures Applicable for Reduced Utilization

Supply-side measures that may be approved for purposes of reduced utilization plans under § 72.43 include the following:

2.1 Generation efficiency

• Heat rate improvement programs
• Availability improvement programs
• Coal cleaning measures that improve boiler efficiency
• Turbine improvements
• Boiler improvements
• Control improvements, including artificial intelligence and expert systems
• Distributed control—local (real-time) versus central (delayed)
• Equipment monitoring
• Performance monitoring
• Preventive maintenance
• Additional or improved heat recovery
• Sliding/variable pressure operations
• Adjustable speed drives
• Improved personnel training to improve man/machine interface

2.2 Transmission and distribution efficiency

• High efficiency transformer switchouts using amorphous core and silicon steel technologies
• Low-loss windings
• Innovative cable insulation
• Reactive power dispatch optimization
• Power factor control
• Primary feeder reconfiguration
• Primary distribution voltage upgrades
• High efficiency substation transformers
• Controllable series capacitors
• Real-time distribution data acquisition analysis and control systems
• Conservation voltage regulation

3. Renewable Energy Generation Measures Applicable for the Conservation and Renewable Energy Reserve Program

The following listed measures are approved as ''qualified renewable energy generation'' for purposes of the Conservation and Renewable Energy Reserve Program. Measures not appearing on the list may also be qualified renewable energy generation measures if they meet the requirements specified in § 73.81.

3.1 Biomass resources

• Combustible energy-producing materials from biological sources which include: wood, plant residues, biological wastes, landfill gas, energy crops, and eligible components of municipal solid waste.

3.2 Solar resources

• Solar thermal systems and the non-fossil fuel portion of solar thermal hybrid systems
• Grid and non-grid connected photovoltaic systems, including systems added for voltage or capacity augmentation of a distribution grid.

3.4 Geothermal resources

• Hydrothermal or geopressurized resources used for dry steam, flash steam, or binary cycle generation of electricity.

3.5 Wind resources

• Grid-connected and non-grid-connected wind farms
• Individual wind-driven electrical generating turbines

Subpart G—Small Diesel Refineries

§ 73.90 Allowance allocations for small diesel refineries.

(a) *Initial certification of eligibility*. The certifying official of a refinery that seeks allowances under this section shall apply for certification of its facility eligibility prior to or accompanying a request for allowances under paragraph (d) of this section. A completed application for certification, submitted to the address in § 73.13 of this chapter, shall include the following:

(1) Photocopies of Form EIA–810 for each month of calendar year 1990 for the refinery;

(2) Photocopies of Form EIA–810 for each month of calendar year 1990 for each refinery that is owned or controlled by the refiner which owns or controls the refinery seeking certification; and

(3) A letter certified by the certifying official that the submitted photocopies are exact duplicates of those forms

filed with the Department of Energy for 1990.

(b) *Request for allowances.* (1) In addition to the application for certification, prior to, or accompanying, the request for allowances, the certifying official for the refinery shall submit an Allowance Tracking System New Account/New Authorized Account Representative Form.

(2) The request for allowances shall be submitted to the address in § 72.13 and shall include the following information:

(i) Certification that all motor fuel produced by the refinery for which allowances are claimed meets the requirements of subsection 211(i) of the Clean Air Act;

(ii) For calendar year 1993 desulfurized diesel fuel, photocopies of Form 810 for October, November and December 1993;

(iii) For calendar years 1994 through 1999, inclusive, photocopies of Form 810 for each month in the respective calendar year.

(3) For joint ventures, each eligible refinery shall submit a separate application under paragraph (b)(2) of this section. Each application must include the diesel fuel throughput applicable to the joint agreement and the requested distribution of allowances that would be allocated to the joint agreement. If the applications for refineries involved in the joint agreement are inconsistent as to the throughput of diesel fuel applicable to the joint agreement or as to the distribution of the allowances, all involved applications will be considered void for purposes of the joint agreement.

(4) The certifying official shall submit all requests for allowances by April 1 of the calendar year following the year in which the diesel fuel was desulfurized to the Director, Acid Rain Division, under the procedures set forth in § 73.13 of this part.

(c) *Allowance allocation.* The Administrator will allocate allowances to the eligible refinery upon satisfactory submittal of information under paragraphs (a) and (b) of this section in the amount calculated according to the following equations. Such allowances will be allocated to the refinery's nonunit subaccount for the calendar year in which the application is made.

(1) Allowances allocated under this section to any eligible refinery will be limited to the tons of SO_2 attributable to the desulfurization of diesel fuel at the refinery. (2) The refinery will be allocated allowances for a calendar year and, in the case of 1993, for the period October 1 through December 31, calculated according to the following equation, but not to exceed 1500 for any calendar year:

$$\text{Allowances Requested} = \frac{\left[\begin{matrix}(a)\\ \text{Diesel Fuel Production}\end{matrix}\right] x \left[\begin{matrix}(b)\\ (302)\end{matrix}\right] x \left[\begin{matrix}(c)\\ (0.00224)\end{matrix}\right] x \left[\begin{matrix}(d)\\ (2)\end{matrix}\right]}{\left[\begin{matrix}2000\\ (e)\end{matrix}\right]}$$

Where:

a=diesel fuel in barrels for the year (or for October 1 through December 31 for 1993)

b=lbs per barrel of diesel

c=lbs of sulfur per lbs of diesel

d=lbs of SO_2 per lbs of sulfur

e=lbs per short ton

(3) If applications for a given year request, in the aggregate, more than 35,000 allowances, the Administrator will allocate allowances to each refinery in the amount equal to the lesser of 1500 or:

$$\text{Refinery Allowances} = \text{the lesser of} \left[\begin{array}{c} \text{Allowances Requested} \times \dfrac{\text{Total Allowances Requested}}{35{,}000} \\ \text{or} \\ 1{,}500 \end{array} \right]$$

[58 FR 15716, Mar. 23, 1993; 58 FR 33770, June 21, 1993]

PART 74—SULFUR DIOXIDE OPT-INS

Subpart A—Background and Summary

Sec.
74.1 Purpose and scope.
74.2 Applicability.
74.3 Relationship to the Acid Rain program requirements.
74.4 Designated representative.

Subpart B—Permitting Procedures

74.10 Roles—EPA and permitting authority.
74.12 Opt-in permit contents.
74.14 Opt-in permit process.
74.16 Application requirements for combustion sources.
74.17 Application requirements for process sources. [Reserved]
74.18 Withdrawal.
74.19 Revision and renewal of opt-in permit.

Subpart C—Allowance Calculation for Combustion Sources

74.20 Data for baseline and alternative baseline.
74.22 Actual SO_2 emissions rate.
74.23 1985 Allowable SO_2 emissions rate.
74.24 Current allowable SO_2 emissions rate.
74.25 Current promulgated SO_2 emissions limit.
74.26 Allocation formula.
74.28 Allowance Allocation for combustion sources becoming opt-in sources on a date other than January 1.

Subpart D—Allowance Calculation for Process Sources [Reserved]

Subpart E—Allowance Tracking and Transfer and End of Year Compliance

74.40 Establishment of opt-in source allowance accounts.
74.41 Identifying allowances.
74.42 Prohibition on future year transfers.
74.43 Annual compliance certification report.
74.44 Reduced utilization for combustion sources.
74.45 Reduced utilization for process sources [Reserved].
74.46 Opt-in source permanent shutdown, reconstruction, or change in affected status.
74.47 Transfer of allowances from the replacement of thermal energy—combustion sources.
74.48 Transfer of allowances from the replacement of thermal energy—process sources. [Reserved]
74.49 Calculation for deducting allowances.
74.50 Deducting opt-in source allowances from ATS accounts.

Subpart F—Monitoring Emissions: Combustion Sources

74.60 Monitoring requirements.
74.61 Monitoring plan.

Subpart G—Monitoring Emissions: Process Sources [Reserved]

AUTHORITY: 42 U.S.C. 7601 and 7651 *et seq.*

SOURCE: 60 FR 17115, Apr. 4, 1995, unless otherwise noted.

Subpart A—Background and Summary

§ 74.1 Purpose and scope.

The purpose of this part is to establish the requirements and procedures for:

(a) The election of a combustion or process source that emits sulfur dioxide to become an affected unit under the Acid Rain Program, pursuant to section 410 of title IV of the Clean Air Act, 42 U.S.C. 7401, *et seq.*, as amended by Public Law 101–549 (November 15, 1990); and

(b) Issuing and modifying operating permits; certifying monitors; and allocating, tracking, transferring, surrendering and deducting allowances for combustion or process sources electing to become affected units.

§74.2 Applicability.

Combustion or process sources that are not affected units under §72.6 of this chapter and that are operating and are located in the 48 contiguous States or the District of Columbia may submit an opt-in permit application to become opt-in sources upon issuance of an opt-in permit. Units for which a written exemption under §72.7 or §72.8 of this chapter is in effect and combustion or process sources that are not operating are not eligible to submit an opt-in permit application to become opt-in sources.

§74.3 Relationship to the Acid Rain program requirements.

(a) *General.* (1) For purposes of applying parts 72, 73, 75, 77 and 78, each opt-in source shall be treated as an affected unit.

(2) Subpart A, B, G, and H of part 72 of this chapter, including §§72.2 (definitions), 72.3 (measurements, abbreviations, and acronyms), 72.4 (federal authority), 72.5 (State authority), 72.6 (applicability), 72.7 (New units exemption), 72.8 (Retired units exemption), 72.9 (Standard Requirements), 72.10 (availability of information), and 72.11 (computation of time), shall apply to this part.

(b) *Permits.* The permitting authority shall act in accordance with this part and parts 70 and 72 of this chapter in issuing or denying an opt-in permit and incorporating it into a combustion or process source's operating permit. To the extent that any requirements of this part, part 72, and part 78 of this chapter are inconsistent with the requirements of part 70 of this chapter, the requirements of this part, part 72, and part 78 of this chapter shall take precedence and shall govern the issuance, denials, revision, reopening, renewal, and appeal of the opt-in permit.

(c) *Appeals.* The procedures for appeals of decisions of the Administrator under this part are contained in part 78 of this chapter.

(d) *Allowances.* A combustion or process source that becomes an affected unit under this part shall be subject to all the requirements of subparts C and D of part 73 of this chapter.

(e) *Excess emissions.* A combustion or process source that becomes an affected unit under this part shall be subject to the requirements of part 77 of this chapter applicable to excess emissions of sulfur dioxide and shall not be subject to the requirements of part 77 of this chapter applicable to excess emissions of nitrogen oxides.

(f) *Monitoring.* A combustion or process source that becomes an affected unit under this part shall be subject to all the requirements of part 75, consistent with subparts F and G of this part.

§74.4 Designated representative.

(a) The provisions of subpart B of part 72 of this chapter shall apply to the designated representative of an opt-in source.

(b) If a combustion or process source is located at the same source as one or more affected units, the combustion or process source shall have the same designated representative as the other affected units at the source.

Subpart B—Permitting Procedures

§74.10 Roles—EPA and permitting authority.

(a) *Administrator responsibilities.* The Administrator shall be responsible for the following activities under the opt-in provisions of the Acid Rain Program:

(1) *Calculating* the baseline or alternative baseline and allowance allocation, and allocating allowances for combustion or process sources that become affected units under this part;

(2) Certifying or recertifying monitoring systems for combustion or process sources as provided under §74.62;

(3) Establishing allowance accounts, tracking allowances, assessing end-of-year compliance, determining reduced utilization, approving thermal energy transfer and accounting for the replacement of thermal energy, closing accounts for opt-in sources that shut down, are reconstructed, become affected under §72.6 of this chapter, or fail to renew their opt-in permit, and deducting allowances as provided under subpart E of this part; and

(4) Ensuring that the opt-in source meets all withdrawal conditions prior to withdrawal from the Acid Rain Program as provided under §74.18; and

(5) Approving and disapproving the request to withdraw from the Acid Rain Program.

(b) *Permitting authority responsibilities.* The permitting authority shall be responsible for the following activities:

(1) Issuing the draft and final opt-in permit;

(2) Revising and renewing the opt-in permit; and

(3) Terminating the opt-in permit for an opt-in source as provided in § 74.18 (withdrawal), § 74.46 (shutdown, reconstruction or change in affected status) and § 74.50 (deducting allowances).

§ 74.12 Opt-in permit contents.

(a) The opt-in permit shall be included in the Acid Rain permit.

(b) *Scope.* The opt-in permit provisions shall apply only to the opt-in source and not to any other affected units.

(c) *Contents.* Each opt-in permit, including any draft or proposed opt-in permit, shall contain the following elements in a format specified by the Administrator:

(1) All elements required for a complete opt-in permit application as provided under § 74.16 for combustion sources or under § 74.17 for process sources or, if applicable, all elements required for a complete opt-in permit renewal application as provided in § 74.19 for combustion sources or under § 74.17 for process sources;

(2) The allowance allocation for the opt-in source as determined by the Administrator under subpart C of this part for combustion sources or subpart D of this part for process sources;

(3) The standard permit requirements as provided under § 72.9 of this chapter, except that the provisions in § 72.9(d) of this chapter shall not be included in the opt-in permit; and

(4) *Termination.* The provision that participation of a combustion or process source in the Acid Rain Program may be terminated only in accordance with § 74.18 (withdrawal), § 74.46 (shutdown, reconstruction, or change in affected status), and § 74.50 (deducting allowances).

(d) Each opt-in permit is deemed to incorporate the definitions of terms under § 72.2 of this chapter.

(e) *Permit shield.* Each opt-in source operated in accordance with the opt-in permit that governs the opt-in source and that was issued in compliance with title IV of the Act, as provided in this part and parts 72, 73, 75, 77, and 78 of this chapter, shall be deemed to be operating in compliance with the Acid Rain Program, except as provided in § 72.9(g)(6) of this chapter.

(f) *Term of opt-in permit.* An opt-in permit shall be issued for a period of 5 years and may be renewed in accordance with § 74.19; provided

(1) If an opt-in permit is issued prior to January 1, 2000, then the opt-in permit may, at the option of the permitting authority, expire on December 31, 1999; and

(2) If an affected unit with an Acid Rain permit is located at the same source as the combustion source, the combustion source's opt-in permit may, at the option of the permitting authority, expire on the same date as the affected unit's Acid Rain permit expires.

§ 74.14 Opt-in permit process.

(a) *Submission.* The designated representative of a combustion or process source may submit an opt-in permit application and a monitoring plan to the Administrator at any time for any combustion or process source that is operating.

(b) *Issuance or denial of opt-in permits.* The permitting authority shall issue or deny opt-in permits or revisions of opt-in permits in accordance with the procedures in part 70 of this chapter and subparts F and G of part 72 of this chapter, except as provided in this section.

(1) *Supplemental information.* Regardless of whether the opt-in permit application is complete, the Administrator or the permitting authority may request submission of any additional information that the Administrator or the permitting authority determines to be necessary in order to review the opt-in permit application or to issue an opt-in permit.

(2) *Interim review of monitoring plan.* The Administrator will determine, on an interim basis, the sufficiency of the monitoring plan, accompanying the

opt-in permit application. A monitoring plan is sufficient, for purposes of interim review, if the plan appears to contain information demonstrating that all SO_2 emissions, NO_x emissions, CO_2 emissions, and opacity of the combustion or process source are monitored and reported in accordance with part 75 of this chapter. This interim review of sufficiency shall not be construed as the approval or disapproval of the combustion or process source's monitoring system.

(3) *Issuance of draft opt-in permit.* After the Administrator determines whether the combustion or process source's monitoring plan is sufficient under paragraph (b)(2) of this section, the permitting authority shall serve the draft opt-in permit or the denial of a draft permit or the draft opt-in permit revisions or the denial of draft opt-in permit revisions on the designated representative of the combustion or process source submitting an opt-in permit application. A draft permit or draft opt-in permit revision shall not be served or issued if the monitoring plan is determined not to be sufficient.

(4) *Confirmation by source of intention to opt-in.* Within 21 calendar days from the date of service of the draft opt-in permit or the denial of the draft opt-in permit, the designated representative of a combustion or process source submitting an opt-in permit application must submit to the Administrator, in writing, a confirmation or recision of the source's intention to become an opt-in source under this part. The Administrator shall treat the failure to make a timely submission as a recision of the source's intention to become an opt-in source and as a withdrawal of the opt-in permit application.

(5) *Issuance of draft opt-in permit.* If the designated representative confirms the combustion or process source's intention to opt in under paragraph (b)(4) of this section, the permitting authority will give notice of the draft opt-in permit or denial of the draft opt-in permit and an opportunity for public comment, as provided under § 72.65 of this chapter with regard to a draft permit or denial of a draft permit if the Administrator is the permitting authority or as provided in accordance with part 70 of this chapter with regard to a draft permit or the denial of a draft permit if the State is the permitting authority.

(6) *Permit decision deadlines.* (i) If the Administrator is the permitting authority, an opt-in permit will be issued or denied within 12 months of receipt of a complete opt-in permit application.

(ii) If the State is the permitting authority, an opt-in permit will be issued or denied within 18 months of receipt of a complete opt-in permit application or such lesser time approved under part 70 of this chapter.

(7) *Withdrawal of opt-in permit application.* A combustion or process source may withdraw its opt-in permit application at any time prior to the issuance of the final opt-in permit. Once a combustion or process source withdraws its application, in order to reapply, it must submit a new opt-in permit application in accordance with § 74.16 for combustion sources or § 74.17 for process sources.

(c) [Reserved]

(d) *Entry into Acid Rain Program*—(1) *Effective date.* The effective date of the opt-in permit shall be the January 1, April 1, July 1, or October 1 for a combustion or process source providing monthly data under § 74.20, or January 1 for a combustion or process source providing annual data under § 74.20, following the later of the issuance of the opt-in permit by the permitting authority or the completion of monitoring system certification, as provided in subpart F of this part for combustion sources or subpart G of this part for process sources. The combustion or process source shall become an opt-in source and an affected unit as of the effective date of the opt-in permit.

(2) *Allowance allocation.* After the opt-in permit becomes effective, the Administrator will allocate allowances to the opt-in source as provided in § 74.40. If the effective date of the opt-in permit is not January 1, allowances for the first year shall be pro-rated as provided in § 74.28.

(e) *Expiration of opt-in permit.* An opt-in permit that is issued before the completion of monitoring system certification under subpart F of this part for combustion sources or under subpart G of this part for process sources shall

expire 180 days after the permitting authority serves the opt-in permit on the designated representative of the combustion or process source governed by the opt-in permit, unless such monitoring system certification is complete. The designated representative may petition the Administrator to extend this time period in which an opt-in permit expires and must explain in the petition why such an extension should be granted. The designated representative of a combustion source governed by an expired opt-in permit and that seeks to become an opt-in source must submit a new opt-in permit application.

§ 74.16 Application requirements for combustion sources.

(a) *Opt-in permit application.* Each complete opt-in permit application for a combustion source shall contain the following elements in a format prescribed by the Administrator:

(1) Identification of the combustion source, including company name, plant name, plant site address, mailing address, description of the combustion source, and information and diagrams on the combustion source's configuration;

(2) Identification of the designated representative, including name, address, telephone number, and facsimile number;

(3) The year and month the combustion source commenced operation;

(4) The number of hours the combustion source operated in the six months preceding the opt-in permit application and supporting documentation;

(5) The baseline or alternative baseline data under § 74.20;

(6) The actual SO_2 emissions rate under § 74.22;

(7) The allowable 1985 SO_2 emissions rate under § 74.23;

(8) The current allowable SO_2 emissions rate under § 74.24;

(9) The current promulgated SO_2 emissions rate under § 74.25;

(10) If the combustion source seeks to qualify for a transfer of allowances from the replacement of thermal energy, a thermal energy plan as provided in § 74.47 for combustion sources; and

(11) A statement whether the combustion source was previously an affected unit under this part;

(12) A statement that the combustion source is not an affected unit under § 72.6 of this chapter;

(13) A complete compliance plan for SO_2 under § 72.40 of this chapter; and

(14) The following statement signed by the designated representative of the combustion source: ''I certify that the data submitted under subpart C of part 74 reflects actual operations of the combustion source and has not been adjusted in any way.''

(b) *Accompanying documents.* The designated representative of the combustion source shall submit a monitoring plan in accordance with § 74.61.

§ 74.17 Application requirements for process sources. [Reserved]

§ 74.18 Withdrawal.

(a) *Withdrawal through administrative amendment.* An opt-in source may request to withdraw from the Acid Rain Program by submitting an administrative amendment under § 72.83 of this chapter; provided that the amendment will be treated as received by the permitting authority upon issuance of the notification of the acceptance of the request to withdraw under paragraph (f)(1) of this section.

(b) *Requesting withdrawal.* To withdraw from the Acid Rain Program, the designated representative of an opt-in source shall submit to the Administrator and the permitting authority a request to withdraw effective January 1 of the year after the year in which the submission is made. The submission shall be made no later than December 1 of the calendar year preceding the effective date of withdrawal.

(c) *Conditions for withdrawal.* In order for an opt-in source to withdraw, the following conditions must be met:

(1) By no later than January 30 of the first calendar year in which the withdrawal is to be effective, the designated representative must submit to the Administrator an annual compliance certification report pursuant to § 74.43.

(2) If the opt-in source has excess emissions in the calendar year before the year for which the withdrawal is to

be in effect, the designated representative must submit an offset plan for excess emissions, pursuant to part 77 of this chapter, that provides for immediate deduction of allowances.

(d) *Administrator's action on withdrawal.* After the opt-in source meets the requirements for withdrawal under paragraphs (b) and (c) of this section, the Administrator will deduct allowances required to be deducted under §73.35 of this chapter and part 77 of this chapter and allowances equal in number to and with the same or earlier compliance use date as those allocated under §74.40 for the first year for which the withdrawal is to be effective and all subsequent years. The Administrator will close the opt-in source's unit account and transfer any remaining allowances to a new general account as specified under §74.46(c).

(e) *Opt-in source's prior violations.* An opt-in source that withdraws from the Acid Rain Program shall comply with all requirements under the Acid Rain Program concerning all years for which the opt-in source was an affected unit, even if such requirements arise, or must be complied with after the withdrawal takes effect. The withdrawal shall not be a defense against any violation of such requirements of the Acid Rain Program whether the violation occurs before or after the withdrawal takes effect.

(f) *Notification.* (1) After the requirements for withdrawal under paragraphs (b) and (c) of this section are met and after the Administrator's action on withdrawal under paragraph (d) of this section is complete, the Administrator will issue a notification to the permitting authority and the designated representative of the opt-in source of the acceptance of the opt-in source's request to withdraw.

(2) If the requirements for withdrawal under paragraphs (b) and (c) of this section are not met or the Administrator's action under paragraph (d) of this section cannot be completed, the Administrator will issue a notification to the permitting authority and the designated representative of the opt-in source that the opt-in source's request to withdraw is denied. If the opt-in source's request to withdraw is denied, the opt-in source shall remain in the Opt-in Program and shall remain subject to the requirements for opt-in sources contained in this part.

(g) *Permit amendment.* (1) After the Administrator issues a notification under paragraph (f)(1) of this section that the requirements for withdrawal have been met (including the deduction of the full amount of allowances as required under paragraph (d) of this section), the permitting authority shall amend, in accordance with §§72.80 and 72.83 (administrative amendment) of this chapter, the opt-in source's Acid Rain permit to terminate the opt-in permit, not later than 60 days from the issuance of the notification under paragraph (f) of this section.

(2) The termination of the opt-in permit under paragraph (g)(1) of this section will be effective on January 1 of the year for which the withdrawal is requested. An opt-in source shall continue to be an affected unit until the effective date of the termination.

(h) *Reapplication upon failure to meet conditions of withdrawal.* If the Administrator denies the opt-in source's request to withdraw, the designated representative may submit another request to withdraw in accordance with paragraphs (b) and (c) of this section.

(i) *Ability to return to the Acid Rain Program.* Once a combustion or process source withdraws from the Acid Rain Program and its opt-in permit is terminated, a new opt-in permit application for the combustion or process source may not be submitted prior to the date that is four years after the date on which the opt-in permit became effective.

§74.19 Revision and renewal of opt-in permit.

(a) The designated representative of an opt-in source may submit revisions to its opt-in permit in accordance with subpart H of part 72 of this chapter.

(b) The designated representative of an opt-in source may renew its opt-in permit by meeting the following requirements:

(1)(i) In order to renew an opt-in permit if the Administrator is the permitting authority for the renewed permit, the designated representative of an

opt-in source must submit to the Administrator an opt-in permit application at least 6 months prior to the expiration of an existing opt-in permit.

(ii) In order to renew an opt-in permit if the State is the permitting authority for the renewed permit, the designated representative of an opt-in source must submit to the permitting authority an opt-in permit application at least 18 months prior to the expiration of an existing opt-in permit or such shorter time as may be approved for operating permits under part 70 of this chapter.

(2) Each complete opt-in permit application submitted to renew an opt-in permit shall contain the following elements in a format prescribed by the Administrator:

(i) Elements contained in the opt-in source's initial opt-in permit application as specified under § 74.16(a)(1), (2), (10), (11), (12), and (13).

(ii) An updated monitoring plan, if applicable under § 75.53(b) of this chapter.

(c)(1) Upon receipt of an opt-in permit application submitted to renew an opt-in permit, the permitting authority shall issue or deny an opt-in permit in accordance with the requirements under subpart B of this part, except as provided in paragraph (c)(2) of this section.

(2) When issuing a renewed opt-in permit, the permitting authority shall not alter an opt-in source's allowance allocation as established, under subpart B and subpart C of this part for combustion sources and under subpart B and subpart D of this part for process sources, in the opt-in permit that is being renewed.

Subpart C—Allowance Calculations for Combustion Sources

§ 74.20 Data for baseline and alternative baseline.

(a) *Acceptable data.* (1) The designated representative of a combustion source shall submit either the data specified in this paragraph or alternative data under paragraph (c) of this section. The designated representative shall also submit the calculations under this section based on such data.

(2) The following data shall be submitted for the combustion source for the calendar year(s) under paragraph (a)(3) of this section:

(i) Monthly or annual quantity of each type of fuel consumed, expressed in thousands of tons for coal, thousands of barrels for oil, and million standard cubic feet (scf) for natural gas. If other fuels are used, the combustion source must specify units of measure.

(ii) Monthly or annual heat content of fuel consumed for each type of fuel consumed, expressed in British thermal units (Btu) per pound for coal, Btu per barrel for oil, and Btu per standard cubic foot (scf) for natural gas. If other fuels are used, the combustion source must specify units of measure.

(iii) Monthly or annual sulfur content of fuel consumed for each type of fuel consumed, expressed as a percentage by weight.

(3) *Calendar Years.* (i) For combustion sources that commenced operating prior to January 1, 1985, data under this section shall be submitted for 1985, 1986, and 1987.

(ii) For combustion sources that commenced operation after January 1, 1985, the data under this section shall be submitted for the first three consecutive calendar years during which the combustion source operated after December 31, 1985.

(b) *Calculation of baseline and alternative baseline.*

(1) For combustion sources that commenced operation prior to January 1, 1985, the baseline is the average annual quantity of fuel consumed during 1985, 1986, and 1987, expressed in mmBtu. The baseline shall be calculated as follows:

$$\text{baseline} = \frac{\sum_{\text{Year}=1985}^{1987} \text{annual fuel consumption}}{3}$$

where,

(i) for a combustion source submitting monthly data,

$$\text{annual fuel consumption} = \sum_{\text{months=Jan}}^{\text{Dec}} \sum_{\text{Fuel Types}} \left[\begin{array}{c} \text{quantity of fuel consumed} \\ \times \text{ heat content } \times \text{ unit conversion} \end{array} \right]$$

and unit conversion
= 2 for coal
= 0.001 for oil
= 1 for gas

For other fuels, the combustion source must specify unit conversion; or

(ii) for a combustion source submitting annual data,

$$\text{annual fuel consumption} = \sum_{\text{Fuel Types}} \left[\begin{array}{c} \text{quantity of fuel consumed} \\ \times \text{ heat content } \times \text{ unit conversion} \end{array} \right]$$

and unit conversion
= 2 for coal
= 0.001 for oil
= 1 for gas

For other fuels, the combustion source must specify unit conversion.

(2) For combustion sources that commenced operation after January 1, 1985, the alternative baseline is the average annual quantity of fuel consumed in the first three consecutive calendar years during which the combustion source operated after December 31, 1985, expressed in mmBtu. The alternative baseline shall be calculated as follows:

$$\text{alternative baseline} = \frac{\sum_{\text{First 3 consecutive years}} \text{annual fuel consumption}}{3}$$

where,

''annual fuel consumption'' is as defined under paragraph (b)(1)(i) or (ii) of this section.

(c) *Alternative data.* (1) For combustion sources for which any of the data under paragraph (b) of this section is not available due solely to a natural catastrophe, data as set forth in paragraph (a)(2) of this section for the first three consecutive calendar years for which data is available after December 31, 1985, may be submitted. The alternative baseline for these combustion sources shall be calculated using the equation for alternative baseline in paragraph (b)(2) of this section and the definition of annual fuel consumption in paragraphs (b)(1)(i) or (ii) of this section.

(2) Except as provided in paragraph (c)(1) of this section, no alternative data may be submitted. A combustion source that cannot submit all required data, in accordance with this section, shall not be eligible to submit an opt-in permit application.

(d) *Administrator's action.* The Administrator may accept in whole or in part or with changes as appropriate, request additional information, or reject data or alternative data submitted for a combustion source's baseline or alternative baseline.

§ 74.22 Actual SO_2 emissions rate.

(a) *Data requirements.* The designated representative of a combustion source shall submit the calculations under this section based on data submitted

under § 74.20 for the following calendar year:

(1) For combustion sources that commenced operation prior to January 1, 1985, the calendar year for calculating the actual SO_2 emissions rate shall be 1985.

(2) For combustion sources that commenced operation after January 1, 1985, the calendar year for calculating the actual SO_2 emissions rate shall be the first year of the three consecutive calendar years of the alternative baseline under § 74.20(b)(2).

(3) For combustion sources meeting the requirements of § 74.20(c), the calendar year for calculating the actual SO_2 emissions rate shall be the first year of the three consecutive calendar years to be used as alternative data under § 74.20(c).

(b) *SO_2 emissions factor calculation.* The SO_2 emissions factor for each type of fuel consumed during the specified year, expressed in pounds per thousand tons for coal, pounds per thousand barrels for oil and pounds per million cubic feet (scf) for gas, shall be calculated as follows:

SO_2 Emissions Factor
= (average percent of sulfur by weight) x (k),

where,

average percent of sulfur by weight
= annual average, for a combustion source submitting annual data
= monthly average, for a combustion source submitting monthly data

k = 39,000 for bituminous coal or anthracite
= 35,000 for subbituminous coal
= 30,000 for lignite
= 5,964 for distillate (light) oil
= 6,594 for residual (heavy) oil
= 0.6 for natural gas

For other fuels, the combustion source must specify the SO_2 emissions factor.

(c) *Annual SO_2 emissions calculation.* Annual SO_2 Emissions for the specified calendar year, expressed in pounds, shall be calculated as follows:

(1) For a combustion source submitting monthly data,

$$\text{Annual } SO_2 \text{ Emissions} = \sum_{\text{months=Jan}}^{\text{Dec}} \sum_{\text{Fuel Types}} \left[\begin{array}{c} \text{quantity of fuel consumed} \\ \times\, SO_2 \text{ emissions factor} \\ \times\, (1 - \text{control system efficiency}) \\ \times\, (1 - \text{fuel pre-treatment efficiency}) \end{array} \right]$$

(2) For a combustion source submitting annual data:

$$\text{Annual } SO_2 \text{ Emissions} = \sum_{\text{Fuel Types}} \left[\begin{array}{c} \text{quantity of fuel consumed} \\ \times\, SO_2 \text{ emissions factor} \\ \times\, (1 - \text{control system efficiency}) \\ \times\, (1 - \text{fuel pre-treatment efficiency}) \end{array} \right]$$

where,

''quantity of fuel consumed'' is as defined under § 74.20(a)(2)(A);

''SO_2 emissions factor'' is as defined under paragraph (b) of this section;

''control system efficiency'' is as defined under § 60.48(a) and part 60, Appendix A, Method 19 of this chapter, if applicable; and

''fuel pre-treatment efficiency'' is as defined under § 60.48(a) and part 60, Appendix A, Method 19 of this chapter, if applicable.

(d) *Annual fuel consumption calculation.* Annual fuel consumption for the specified calendar year, expressed in

mmBtu, shall be calculated as defined under § 74.20(b)(1) (i) or (ii).

(e) *Actual SO_2 emissions rate calculation.* The actual SO_2 emissions rate for the specified calendar year, expressed in lbs/mmBtu, shall be calculated as follows:

$$\text{Actual } SO_2 \text{ Emissions Rate} = \frac{\text{Annual } SO_2 \text{ Emissions}}{\text{Annual Fuel Consumption}}$$

§ 74.23 1985 Allowable SO_2 emissions rate.

(a) *Data requirements.* (1) The designated representative of the combustion source shall submit the following data and the calculations under paragraph (b) of this section based on the submitted data:

(i) Allowable SO_2 emissions rate of the combustion source expressed in lbs/mmBtu as defined under § 72.2 of this chapter for the calendar year specified in paragraph (a)(2) of this section. If the allowable SO_2 emissions rate is not expressed in lbs/mmBtu, the allowable emissions rate shall be converted to lbs/mmBtu by multiplying the emissions rate by the appropriate factor as specified in Table 1 of this section.

TABLE 1.—FACTORS TO CONVERT EMISSION LIMITS TO POUNDS OF SO_2/mmBtu

Unit measurement	Bituminous coal	Subbituminous coal	Lignite coal	Oil
lbs Sulfur/mmBtu	2.0	2.0	2.0	2.0
% Sulfur in fuel	1.66	2.22	2.86	1.07
ppm SO_2	0.00287	0.00384	.....	0.00167
ppm Sulfur in fuel	.....	.....	.....	0.00334
tons SO_2/hour	2×8760/(annual fuel consumption for specified year [1]×10^3)			
lbs SO_2/hour	8760/(annual fuel consumption for specified year [1]×10^6)			

1 Annual fuel consumption as defined under § 74.20(b)(1) (i) or (ii); specified calendar year as defined under § 74.23(a)(2).

(ii) Citation of statute, regulations, and any other authority under which the allowable emissions rate under paragraph (a)(1) of this section is established as applicable to the combustion source;

(iii) Averaging time associated with the allowable emissions rate under paragraph (a)(1) of this section.

(iv) The annualization factor for the combustion source, based on the type of combustion source and the associated averaging time of the allowable emissions rate of the combustion source, as set forth in the Table 2 of this section:

TABLE 2.—ANNUALIZATION FACTORS FOR SO_2 Emission Rates

Type of combustion source	Annualization factor for scrubbed unit	Annualization factor for unscrubbed unit
Unit Combusting Oil, Gas, or some combination	1.00	1.00
Coal Unit with Averaging Time <= 1 day	0.93	0.89
Coal Unit with Averaging Time = 1 week	0.97	0.92
Coal Unit with Averaging Time = 30 days	1.00	0.96
Coal Unit with Averaging Time = 90 days	1.00	1.00
Coal Unit with Averaging Time = 1 year	1.00	1.00
Coal Unit with Federal Limit, but Averaging Time Not Specified	0.93	0.89

(2) *Calendar year.* (i) For combustion sources that commenced operation prior to January 1, 1985, the calendar

year for the allowable SO_2 emissions rate shall be 1985.

(ii) For combustion sources that commenced operation after January 1, 1985, the calendar year for the allowable SO_2 emissions rate shall be the first year of the three consecutive calendar years of the alternative baseline under § 74.20(b)(2).

(iii) For combustion sources meeting the requirements of § 74.20(c), the calendar year for calculating the allowable SO_2 emissions rate shall be the first year of the three consecutive calendar years to be used as alternative data under § 74.20(c).

(b) *1985 Allowable SO_2 emissions rate calculation*. The allowable SO_2 emissions rate for the specified calendar year shall be calculated as follows:

1985 Allowable SO_2 Emissions Rate = (Allowable SO_2 Emissions Rate) × (Annualization Factor)

§ 74.24 Current allowable SO_2 emissions rate.

The designated representative shall submit the following data:

(a) Current allowable SO_2 emissions rate of the combustion source, expressed in lbs/mmBtu, which shall be the most stringent federally enforceable emissions limit in effect as of the date of submission of the opt-in application. If the allowable SO_2 emissions rate is not expressed in lbs/mmBtu, the allowable emissions rate shall be converted to lbs/mmBtu by multiplying the allowable rate by the appropriate factor as specified in Table 1 in § 74.23(a)(1)(i).

(b) Citations of statute, regulation, and any other authority under which the allowable emissions rate under paragraph (a) of this section is established as applicable to the combustion source;

(c) Averaging time associated with the allowable emissions rate under paragraph (a) of this section.

§ 74.25 Current promulgated SO_2 emissions limit.

The designated representative shall submit the following data:

(a) Current promulgated SO_2 emissions limit of the combustion source, expressed in lbs/mmBtu, which shall be the most stringent federally enforceable emissions limit that has been promulgated as of the date of submission of the opt-in permit application and that either is in effect on that date or will take effect after that date. If the promulgated SO_2 emissions limit is not expressed in lbs/mmBtu, the limit shall be converted to lbs/mmBtu by multiplying the limit by the appropriate factor as specified in Table 1 of § 74.23(a)(1)(i).

(b) Citations of statute, regulation and any other authority under which the emissions limit under paragraph (a) of this section is established as applicable to the combustion source;

(c) Averaging time associated with the emissions limit under paragraph (a) of this section.

(d) Effective date of the emissions limit under paragraph (a) of this section.

§ 74.26 Allocation formula.

(a) The Administrator will calculate the annual allowance allocation for a combustion source based on the data, corrected as necessary, under § 74.20 through § 74.25 as follows:

(1) For combustion sources for which the current promulgated SO_2 emissions limit under § 74.25 is greater than or equal to the current allowable SO_2 emissions rate under § 74.24, the number of allowances allocated for each year equals:

$$\text{Allowances} = \frac{\begin{bmatrix}\text{baseline}\\ \text{or}\\ \text{alternative baseline}\end{bmatrix} \times \text{the lesser of} \begin{bmatrix}\text{the actual } SO_2 \text{ emissions rate}\\ \text{or}\\ \text{the 1985 allowable } SO_2 \text{ emissions rate}\\ \text{or}\\ \text{the current allowable } SO_2 \text{ emissions rate}\end{bmatrix}}{2000}$$

(2) For combustion sources in which the current promulgated SO_2 emissions limit under § 74.25 is less than the current allowable SO_2 emissions rate under § 74.24.

(i) The number of allowances for each year ending prior to the effective date of the promulgated SO_2 emissions limit equals:

$$\text{Allowances} = \frac{\begin{bmatrix}\text{baseline}\\ \text{or}\\ \text{alternative baseline}\end{bmatrix} \times \text{the lesser of} \begin{bmatrix}\text{the actual } SO_2 \text{ emissions rate}\\ \text{or}\\ \text{the 1985 allowable } SO_2 \text{ emissions rate}\\ \text{or}\\ \text{the current allowable } SO_2 \text{ emissions rate}\end{bmatrix}}{2000}$$

(ii) The number of allowances for the year that includes the effective date of the promulgated SO_2 emissions limit and for each year thereafter equals:

$$\text{Allowances} = \frac{\begin{bmatrix}\text{baseline}\\ \text{or}\\ \text{alternative baseline}\end{bmatrix} \times \text{the lesser of} \begin{bmatrix}\text{the actual } SO_2 \text{ emissions rate}\\ \text{or}\\ \text{the 1985 allowable } SO_2 \text{ emissions rate}\\ \text{or}\\ \text{the current promulgated } SO_2 \text{ emissions rate}\end{bmatrix}}{2000}$$

§ 74.28 Allowance allocation for combustion sources becoming opt-in sources on a date other than January 1.

(a) *Dates of entry.* (1) If an opt-in source provided monthly data under § 74.20, the opt-in source's opt-in permit may become effective at the beginning of a calendar quarter as of January 1, April 1, July 1, or October 1.

(2) If an opt-in source provided annual data under § 74.20, the opt-in source's opt-in permit must become effective on January 1.

(b) *Prorating by Calendar Quarter.* Where a combustion source's opt-in permit becomes effective on April 1, July 1, or October 1 of a given year, the Administrator will prorate the allowance allocation for that first year by the calendar quarters remaining in the year as follows:

Allowances for the first year

$$= \left(\frac{\text{first year partial baseline}}{\text{baseline or alternative baseline}}\right) \times \text{annual allocation of allowances for the first year}$$

(1) For combustion sources that commenced operations before January 1, 1985,

$$\text{first year partial baseline} = \frac{\sum_{\text{Year}=1985}^{1987} \text{fuel consumption for remaining calendar quarters}}{3}$$

(2) For combustion sources that commenced operations after January 1, 1985,

$$\text{first year partial baseline} = \sum_{\text{First 3 consecutive years}} \frac{\text{fuel consumption for the remaining calendar quarters}}{3}$$

(3) Under paragraphs (b) (1) and (2) of this section,

(i) ''Remaining calendar quarters'' shall be the calendar quarters in the first year for which the opt-in permit will be effective.

(ii) Fuel consumption for remaining calendar quarters =

$$\sum_{\text{months}=\text{Apr., Jul., or Oct.}}^{\text{Dec}} \cdot \sum_{\text{Fuel Types}} \text{quantity of fuel consumed} \times \text{heat content} \times \text{unit conversion}$$

where unit conversion
= 2 for coal
= 0.001 for oil
= 1 for gas

For other fuels, the combustion source must specify unit conversion;

and where starting month
= April, if effective date is April 1;
= July, if effective date is July 1; and
= October, if effective date is October 1.

Subpart D—Allowance Calculations for Process Sources—[Reserved]

Subpart E—Allowance Tracking and Transfer and End of Year Compliance

§ 74.40 Establishment of opt-in source allowance accounts.

(a) *Establishing accounts.* Not earlier than the date on which a combustion or process source becomes an affected unit under this part and upon receipt of a request for an opt-in account under paragraph (b) of this section, the Administrator will establish an account and allocate allowances in accordance with subpart C of this part for combustion sources or subpart D of this part for process sources. A separate unit account will be established for each opt-in source.

(b) *Request for opt-in account.* The designated representative of the opt-in source shall, on or after the effective date of the opt-in permit as specified in § 74.14(d), submit a letter requesting the opening of an allowance account in the Allowance Tracking System to the Administrator.

§ 74.41 Identifying allowances.

(a) *Identifying allowances.* Allowances allocated to an opt-in source will be assigned a serial number that identifies them as being allocated under an opt-in permit.

(b) *Submittal of opt-in allowances for auction.* (1) An authorized account representative may offer for sale in the spot auction under § 73.70 of this chapter allowances that are allocated to opt-in sources, if the allowances have a compliance use date earlier than the year in which the spot auction is to be

held and if the Administrator has completed the deductions for compliance under §73.35(b) for the compliance year corresponding to the compliance use date of the offered allowances.

(2) Authorized account representatives may not offer for sale in the advance auctions under §73.70 of this chapter allowances allocated to opt-in sources.

§74.42 Prohibition on future year transfers.

(a) The Administrator will not record a transfer of opt-in allowances allocated to opt-in sources from a future year subaccount into any other future year subaccount in the Allowance Tracking System.

§74.43 Annual compliance certification report.

(a) *Applicability and deadline.* For each calendar year in which an opt-in source is subject to the Acid Rain emissions limitations, the designated representative of the opt-in source shall submit to the Administrator, no later than 60 days after the end of the calendar year, an annual compliance certification report for the opt-in source in lieu of any annual compliance certification report required under subpart I of part 72 of this chapter.

(b) *Contents of report.* The designated representative shall include in the annual compliance certification report the following elements, in a format prescribed by the Administrator, concerning the opt-in source and the calendar year covered by the report:

(1) Identification of the opt-in source;

(2) An opt-in utilization report in accordance with §74.44 for combustion sources and §74.45 for process sources;

(3) A thermal energy compliance report in accordance with §74.47 for combustion sources and §74.48 for process sources, if applicable;

(4) Shutdown or reconstruction information in accordance with §74.46, if applicable;

(5) A statement that the opt-in source has not become an affected unit under §72.6 of this chapter;

(6) At the designated representative's option, the total number of allowances to be deducted for the year, using the formula in §74.49, and the serial numbers of the allowances that are to be deducted; and

(7) At the designated representative's option, for opt-in sources that share a common stack and whose emissions of sulfur dioxide are not monitored separately or apportioned in accordance with part 75 of this chapter, the percentage of the total number of allowances under paragraph (b)(6) of this section for all such affected units that is to be deducted from each affected unit's compliance subaccount; and

(8) The compliance certification under paragraph (c) of this section.

(c) *Annual compliance certification.* In the annual compliance certification report under paragraph (a) of this section, the designated representative shall certify, based on reasonable inquiry of those persons with primary responsibility for operating the opt-in source in compliance with the Acid Rain Program, whether the opt-in source was operated during the calendar year covered by the report in compliance with the requirements of the Acid Rain Program applicable to the opt-in source, including:

(1) Whether the opt-in source was operated in compliance with applicable Acid Rain emissions limitations, including whether the opt-in source held allowances, as of the allowance transfer deadline, in its compliance subaccount (after accounting for any allowance deductions or other adjustments under §73.34(c) of this chapter) not less than the opt-in source's total sulfur dioxide emissions during the calendar year covered by the annual report;

(2) Whether the monitoring plan that governs the opt-in source has been maintained to reflect the actual operation and monitoring of the opt-in source and contains all information necessary to attribute monitored emissions to the opt-in source;

(3) Whether all the emissions from the opt-in source or group of affected units (including the opt-in source) using a common stack were monitored or accounted for through the missing data procedures and reported in the quarterly monitoring reports in accordance with part 75 of this chapter;

(4) Whether the facts that form the basis for certification of each monitor at the opt-in source or group of affected units (including the opt-in source) using a common stack or of an opt-in source's qualifications for using an Acid Rain Program excepted monitoring method or approved alternative monitoring method, if any, have changed;

(5) If a change is required to be reported under paragraph (c)(4) of this section, specify the nature of the change, the reason for the change, when the change occurred, and how the unit's compliance status was determined subsequent to the change, including what method was used to determine emissions when a change mandated the need for monitoring recertification; and

(6) When applicable, whether the opt-in source was operating in compliance with its thermal energy plan as provided in § 74.47 for combustion sources and § 74.48 for process sources.

§ 74.44 Reduced utilization for combustion sources.

(a) *Calculation of utilization*—(1) *Annual utilization.* (i) Except as provided in paragraph (a)(1)(ii) of this section, annual utilization for the calendar year shall be calculated as follows:

Annual Utilization = Actual heat input + Reduction from improved efficiency

where,

(A) ''Actual heat input'' shall be the actual annual heat input (in mmBtu) of the opt-in source for the calendar year determined in accordance with Appendix F of part 75 of this chapter.

(B) ''Reduction from improved efficiency'' shall be the sum of the following four elements: Reduction from demand side measures that improve the efficiency of electricity consumption; reduction from demand side measures that improve the efficiency of steam consumption; reduction from improvements in the heat rate at the opt-in source; and reduction from improvement in the efficiency of steam production at the opt-in source. Qualified demand side measures applicable to the calculation of utilization for opt-in sources are listed in Appendix A, Section 1 of part 73 of this chapter.

(C) ''Reduction from demand side measures that improve the efficiency of electricity consumption'' shall be a good faith estimate of the expected kilowatt hour savings during the calendar year for such measures and the corresponding reduction in heat input (in mmBtu) resulting from those measures. The demand side measures shall be implemented at the opt-in source, in the residence or facility to which the opt-in source delivers electricity for consumption or in the residence or facility of a customer to whom the opt-in source's utility system sells electricity. The verified amount of such reduction shall be submitted in accordance with paragraph (c)(2) of this section.

(D) ''Reduction from demand side measures that improve the efficiency of steam consumption'' shall be a good faith estimate of the expected steam savings (in mmBtu) from such measures during the calendar year and the corresponding reduction in heat input (in mmBtu) at the opt-in source as a result of those measures. The demand side measures shall be implemented at the opt-in source or in the facility to which the opt-in source delivers steam for consumption. The verified amount of such reduction shall be submitted in accordance with paragraph (c)(2) of this section.

(E) ''Reduction from improvements in heat rate'' shall be a good faith estimate of the expected reduction in heat rate during the calendar year and the corresponding reduction in heat input (in mmBtu) at the opt-in source as a result of all improved unit efficiency measures at the opt-in source and may include supply-side measures listed in Appendix A, section 2.1 of part 73 of this chapter. The verified amount of such reduction shall be submitted in accordance with paragraph (c)(2) of this section.

(F) ''Reduction from improvement in the efficiency of steam production at the opt-in source'' shall be a good faith estimate of the expected improvement in the efficiency of steam production at the opt-in source during the calendar year and the corresponding reduction in heat input (in mmBtu) at

the opt-in source as a result of all improved steam production efficiency measures. In order to claim improvements in the efficiency of steam production, the designated representative of the opt-in source must demonstrate to the satisfaction of the Administrator that the heat rate of the opt-in source has not increased. The verified amount of such reduction shall be submitted in accordance with paragraph (c)(2) of this section.

(G) Notwithstanding paragraph (a)(1)(i)(B) of this section, where two or more opt-in sources, or two or more opt-in sources and Phase I units, include in their annual compliance certification reports their good faith estimate of kilowatt hour savings or steam savings from the same demand side measures that improve the efficiency of electricity or steam consumption:

(*1*) The designated representatives of all such opt-in sources and Phase I units shall submit with their annual compliance certification reports a certification signed by all such designated representatives. The certification shall apportion the total kilowatt hour savings or steam savings among such opt-in sources and Phase I units.

(*2*) Each designated representative shall include in its annual compliance certification report only its share of kilowatt hour savings or steam savings.

(ii) For an opt-in source whose opt-in permit becomes effective on a date other than January 1, annual utilization for the first year shall be calculated as follows:

$$\text{Annual Utilization} = \begin{matrix}\text{Actual heat input}\\ \text{for the remaining calendar quarters}\end{matrix} + \begin{matrix}\text{Reduction from improved efficiency}\\ \text{for the remaining calendar quarters}\end{matrix}$$

where ''actual heat input'' and ''reduction from improved efficiency'' are defined as set forth in paragraph (a)(1)(i) of this section but are restricted to data or estimates for the ''remaining calendar quarters'', which are the calendar quarters that begin on or after the date the opt-in permit becomes effective.

(2) *Average utilization.* Average utilization for the calendar year shall be defined as the average of the annual utilization calculated as follows:

(i) For the first two calendar years after the effective date of an opt-in permit taking effect on January 1 or for the first two calendar years after the effective date of a thermal energy plan governing an opt-in source in accordance with § 74.47 of this chapter, average utilization will be calculated as follows:

(A) Average utilization for the first year = annual $\text{utilization}_{\text{year 1}}$

where ''annual $\text{utilization}_{\text{year 1}}$'' is as calculated under paragraph (a)(1)(i) of this section.

(B) Average utilization for the second year

$$= \left(\frac{\text{revised annual utilization}_{\text{year 1}} + \text{annual utilization}_{\text{year 2}}}{2}\right)$$

where,

''revised annual $\text{utilization}_{\text{year 1}}$'' is as submitted for the year under paragraph (c)(2)(i)(B) of this section and adjusted under paragraph (c)(2)(iii) of this section;

''annual $\text{utilization}_{\text{year 2}}$'' is as calculated under paragraph (a)(1)(i) of this section.

(ii) For the first three calendar years after the effective date of the opt-in permit taking effect on a date other than January 1, average utilization will be calculated as follows:

(A) Average utilization for the first year after opt-in = annual utilization$_{\text{year 1}}$

where ''annual utilization$_{\text{year 1}}$'' is as calculated under paragraph (a)(1)(ii) of this section.

(B) Average utilization for the second year after opt-in

where,

$$= \left(\frac{\text{revised annual utilization}_{\text{year 1}} + \text{annual utilization}_{\text{year 2}}}{\left(\begin{array}{c} \text{Number of months} \\ \text{in year 1 and year 2 for which} \\ \text{the opt-in permit is effective} \end{array} \right)} \right) \times 12$$

''revised annual utilization$_{\text{year 1}}$'' is as submitted for the year under paragraph (c)(2)(i)(B) of this section and adjusted under paragraph (c)(2)(iii) of this section; and

''annual utilization$_{\text{year 2}}$'' is as calculated under paragraph (a)(1)(ii) of this section.

(C) Average utilization for the third year after opt-in

$$= \left(\frac{\text{revised annual utilization}_{\text{year 1}} + \text{revised annual utilization}_{\text{year 2}} + \text{annual utilization}_{\text{year 3}}}{\left(\begin{array}{c} \text{Number of months} \\ \text{in year 1, year 2, and year 3} \\ \text{for which the opt-in permit is effective} \end{array} \right)} \right) \times 12$$

where,

''revised annual utilization$_{\text{year 1}}$'' is as submitted for the year under paragraph (c)(2)(i)(B) of this section and adjusted under paragraph (c)(2)(iii) of this section; and

''revised annual utilization$_{\text{year 2}}$'' is as submitted for the year under paragraph (c)(2)(i)(B) of this section and adjusted under paragraph (c)(2)(iii) of this section; and

''annual utilization$_{\text{year 3}}$'' is as calculated under paragraph (a)(1)(ii) of this section.

(iii) Except as provided in paragraphs (a)(2)(i) and (a)(2)(ii), average utilization shall be the sum of annual utilization for the calendar year and the revised annual utilization, submitted under paragraph (c)(2)(i)(B) of this section and adjusted by the Administrator under paragraph (c)(2)(iii) of this section, for the two immediately preceding calendar years divided by 3.

(b) *Determination of reduced utilization and calculation of allowances*—(1) *Determination of reduced utilization*. For a year during which its opt-in permit is effective, an opt-in source has reduced utilization if the opt-in source's average utilization for the calendar year, as calculated under paragraph (a) of this section, is less than its baseline.

(2) *Calculation of allowances deducted for reduced utilization*. If the Administrator determines that an opt-in source has reduced utilization for a calendar year during which the opt-in source's opt-in permit is in effect, the Administrator will deduct allowances, as calculated under paragraph (b)(2)(i) of this section, from the compliance subaccount of the opt-in source's Allowance Tracking System account.

(i) Allowances deducted for reduced utilization =

$$\text{Number of allowances allocated for the calendar year} \times \left(1 - \left(\frac{\text{average utilization}_{\text{calendar year}}}{\text{baseline}}\right)\right)$$

(ii) The allowances deducted shall have the same or an earlier compliance use date as those allocated under subpart C of this part for the calendar year for which the opt-in source has reduced utilization.

(c) *Compliance*—(1) *Opt-in Utilization Report.* The designated representative for each opt-in source shall submit an opt-in utilization report for the calendar year, as part of its annual compliance certification report under § 74.43, that shall include the following elements in a format prescribed by the Administrator:

(i) The name, authorized account representative identification number, and telephone number of the designated representative of the opt-in source;

(ii) The opt-in source's account identification number in the Allowance Tracking System;

(iii) The opt-in source's annual utilization for the calendar year, as defined under paragraph (a)(1) of this section, and the revised annual utilization, submitted under paragraph (c)(2)(i)(B) of this section and adjusted under paragraph (c)(2)(iii) of this section, for the two immediately preceding calendar years;

(iv) The opt-in source's average utilization for the calendar year, as defined under paragraph (a)(2) of this section;

(v) The difference between the opt-in source's average utilization and its baseline;

(vi) The number of allowances that shall be deducted, if any, using the formula in paragraph (b)(2)(i) of this section and the supporting calculations;

(2) *Confirmation report.* (i) If the annual compliance certification report for an opt-in source includes estimates of any reduction in heat input resulting from improved efficiency as defined under paragraph (a)(1)(i) of this section, the designated representative shall submit, by July 1 of the year in which the annual compliance certification report was submitted, a confirmation report, concerning the calendar year covered by the annual compliance certification report. The Administrator may grant, for good cause shown, an extension of the time to file the confirmation report. The confirmation report shall include the following elements in a format prescribed by the Administrator:

(A) *Verified reduction in heat input.* Any verified kwh savings or any verified steam savings from demand side measures that improve the efficiency of electricity or steam consumption, any verified reduction in the heat rate at the opt-in source, or any verified improvement in the efficiency of steam production at the opt-in source achieved and the verified corresponding reduction in heat input for the calendar year that resulted.

(B) *Revised annual utilization.* The opt-in source's annual utilization for the calendar year as provided under paragraph (c)(1)(iii) of this section, recalculated using the verified reduction in heat input for the calendar year under paragraph (c)(2)(i)(A) of this section.

(C) *Revised average utilization.* The opt-in source's average utilization as provided under paragraph (c)(1)(iv) of this section, recalculated using the verified reduction in heat input for the calendar year under paragraph (c)(2)(i)(A) of this section.

(D) *Recalculation of reduced utilization.* The difference between the opt-in source's recalculated average utilization and its baseline.

(E) *Allowance adjustment.* The number of allowances that should be credited or deducted using the formulas in paragraphs (c)(2)(iii)(C) and (D) of this section and the supporting calculations; and the number of adjusted allowances remaining using the formula in paragraph (c)(2)(iii)(E) of this section and the supporting calculations.

(ii) *Documentation.* (A) For all figures under paragraphs (c)(2)(i)(A) of this section, the opt-in source must provide as part of the confirmation report, documentation (which may follow the

EPA Conservation Verification Protocol) verifying the figures to the satisfaction of the Administrator.

(B) Notwithstanding paragraph (c)(2)(i)(A) of this section, where two or more opt-in sources, or two or more opt-in sources and Phase I units include in the confirmation report under paragraph (c)(2) of this section or § 72.91(b) of this chapter the verified kilowatt hour savings or steam savings defined under paragraph (c)(2)(i)(A) of this section, for the calendar year, from the same specific measures:

(1) The designated representatives of all such opt-in sources and Phase I units shall submit with their confirmation reports a certification signed by all such designated representatives. The certification shall apportion the total kilowatt hour savings or steam savings as defined under paragraph (c)(2)(i)(A) of this section for the calendar year among such opt-in sources.

(2) Each designated representative shall include in the opt-in source's confirmation report only its share of the verified reduction in heat input as defined under paragraph (c)(2)(i)(A) of this section for the calendar year under the certification under paragraph (c)(2)(ii)(B)(1) of this section.

(iii) *Determination of reduced utilization based on confirmation report.* (A) If an opt-in source must submit a confirmation report as specified under paragraph (c)(2) of this section, the Administrator, upon such submittal, will adjust his or her determination of reduced utilization for the calendar year for the opt-in source. Such adjustment will include the recalculation of both annual utilization and average utilization, using verified reduction in heat input as defined under paragraph (c)(2)(i)(A) of this section for the calendar year instead of the previously estimated values.

(B) *Estimates confirmed.* If the total, included in the confirmation report, of the amounts of verified reduction in the opt-in source's heat input equals the total estimated in the opt-in source's annual compliance certification report for the calendar year, then the designated representative shall include in the confirmation report a statement indicating that is true.

(C) *Underestimate.* If the total, included in the confirmation report, of the amounts of verified reduction in the opt-in source's heat input is greater than the total estimated in the opt-in source's annual compliance certification report for the calendar year, then the designated representative shall include in the confirmation report the number of allowances to be credited to the opt-in source's compliance subaccount calculated using the following formula:

Allowances credited for the calendar year in which the reduced utilization occurred=

$$\text{Number of allowances allocated for the calendar year} \times \left[\frac{\text{Average utilization}_{\text{Verified}} - \text{Average utilization}_{\text{Estimate}}}{\text{baseline}}\right]$$

where,

Average $\text{Utilization}_{\text{estimate}}$=

the average utilization of the opt-in source as defined under paragraph (a)(2) of this section, calculated using the estimated reduction in the opt-in source's heat input under (a)(1) of this section, and submitted in the annual compliance certification report for the calendar year.

Average $\text{Utilization}_{\text{verified}}$=

the average utilization of the opt-in source as defined under paragraph (a)(2) of this section, calculated using the verified reduction in the opt-in source's heat input as submitted under paragraph (c)(2)(i)(A) of this section by the designated representative in the confirmation report.

(D) *Overestimate.* If the total of the amounts of verified reduction in the opt-in source's heat input included in the confirmation report is less than the total estimated in the opt-in source's annual compliance certification report for the calendar year, then the designated representative shall include in

the confirmation report the number of allowances to be deducted from the opt-in source's compliance subaccount, which equals the absolute value of the result of the formula for allowances credited under paragraph (c)(2)(iii)(C) of this section.

(E) *Adjusted allowances remaining.* Unless paragraph (c)(2)(iii)(B) of this section applies, the designated representative shall include in the confirmation report the adjusted amount of allowances that would have been held in the opt-in source's compliance subaccount if the deductions made under § 73.35(b) of this chapter had been based on the verified, rather than the estimated, reduction in the opt-in source's heat input, calculated as follows:

$$\text{Adjusted amount of allowances} = \begin{array}{c}\text{Allowances held after deduction} - \text{Excess emissions} \\ + \text{Allowances credited} - \text{Allowances deducted}\end{array}$$

where:

''Allowances held after deduction'' shall be the amount of allowances held in the opt-in source's compliance subaccount after deduction of allowances was made under § 73.35(b) of this chapter based on the annual compliance certification report.

''Excess emissions'' shall be the amount (if any) of excess emissions determined under § 73.35(d) for the calendar year based on the annual compliance certification report. ''Allowances credited'' shall be the amount of allowances calculated under paragraph (c)(2)(iii)(C) of this section.

''Allowances deducted'' shall be the amount of allowances calculated under paragraph (c)(2)(iii)(D) of this section.

(1) If the result of the formula for ''adjusted amount of allowances'' is negative, the absolute value of the result constitutes excess emissions of sulfur dioxide. If the result is positive, there are no excess emissions of sulfur dioxide.

(2) If the amount of excess emissions of sulfur dioxide calculated under ''adjusted amount of allowances'' differs from the amount of excess emissions of sulfur dioxide determined under § 73.35 of this chapter based on the annual compliance certification report, then the designated representative shall include in the confirmation report a demonstration of:

(i) The number of allowances that should be deducted to offset any increase in excess emissions or returned to the account for any decrease in excess emissions; and

(ii) The amount of the excess emissions penalty (excluding interest) that should be paid or returned to the account for the change in excess emissions.

(3) The Administrator will deduct immediately from the opt-in source's compliance subaccount the amount of allowances necessary to offset any increase in excess emissions or will return immediately to the opt-in source's compliance subaccount the amount of allowances that he or she determines is necessary to account for any decrease in excess emissions.

(4) The designated representative may identify the serial numbers of the allowances to be deducted or returned. In the absence of such identification, the deduction will be on a first-in, first-out basis under § 73.35(c)(2) of this chapter and the identification of allowances returned will be at the Administrator's discretion.

(5) If the designated representative of an opt-in source fails to submit on a timely basis a confirmation report, in accordance with paragraph (c)(2) of this section, with regard to the estimate of reductions in heat input as defined under paragraph (c)(2)(i)(A) of this section, then the Administrator will reject such estimate and correct it to equal zero in the opt-in source's annual compliance certification report that includes that estimate. The Administrator will deduct immediately, on a first-in, first-out basis under § 73.35(c)(2) of this chapter, the amount of allowances that he or she determines is necessary to offset any increase in excess emissions of sulfur dioxide that

results from the correction and will require the owners and operators of the opt-in source to pay an excess emission penalty in accordance with part 77 of this chapter.

(F) If the opt-in source is governed by an approved thermal energy plan under § 74.47 and if the opt-in source must submit a confirmation report as specified under paragraph (c)(2) of this section, the adjusted amount of allowances that should remain in the opt-in source's compliance subaccount shall be calculated as follows:

Adjusted amount of allowances =

$$= \text{allowances allocated} - \text{tons emitted} - \text{the larger of} \begin{pmatrix} \text{allowances transferred} \\ \text{to all replacement units} \\ \text{or} \\ \text{allowances deducted} \\ \text{for reduced utilization} \end{pmatrix}$$

where,

''Allowances allocated'' shall be the original number of allowances allocated under section § 74.40 for the calendar year.

''Tons emitted'' shall be the total tons of sulfur dioxide emitted by the opt-in source during the calendar year, as reported in accordance with subpart F of this part for combustion sources.

''Allowances transferred to all replacement units'' shall be the sum of allowances transferred to all replacement units under an approved thermal energy plan in accordance with § 74.47 and adjusted by the Administrator in accordance with § 74.47(d)(2).

''Allowances deducted for reduced utilization'' shall be the total number of allowances deducted for reduced utilization as calculated in accordance with this section including any adjustments required under paragraph (c)(iii)(E) of this section.

§ 74.45 Reduced utilization for process sources. [Reserved]

§ 74.46 Opt-in source permanent shutdown, reconstruction, or change in affected status.

(a) *Notification*. (1) When an opt-in source has permanently shutdown during the calendar year, the designated representative shall notify the Administrator of the date of shutdown, within 30 days of such shutdown.

(2) When an opt-in source has undergone a modification that qualifies as a reconstruction as defined in § 60.15 of this chapter, the designated representative shall notify the Administrator of the date of completion of the reconstruction, within 30 days of such completion.

(3) When an opt-in source becomes an affected unit under § 72.6 of this chapter, the designated representative shall notify the Administrator of such change in the opt-in source's affected status within 30 days of such change.

(b) *Administrator's action*. (1) The Administrator will terminate the opt-in source's opt-in permit and deduct allowances as provided below in the following circumstances:

(i) When an opt-in source has permanently shutdown. The Administrator shall deduct allowances equal in number to and with the same or earlier compliance use date as those allocated to the opt-in source under § 74.40 for the calendar year in which the shut down occurs and for all future years following the year in which the shut down occurs; or

(ii) When an opt-in source has undergone a modification that qualifies as a reconstruction as defined in § 60.15 of this chapter. The Administrator shall deduct allowances equal in number to and with the same or earlier compliance use date as those allocated to the opt-in source under § 74.40 for the calendar year in which the reconstruction is completed and all future years following the year in which the reconstruction is completed; or

(iii) When an opt-in source becomes an affected unit under § 72.6 of this chapter. The Administrator shall deduct allowances equal in number to and with the same or earlier compliance use date as those allocated to the

opt-in source under §74.40 for the calendar year in which the opt-in source becomes affected under §72.6 of this chapter and all future years following the calendar year in which the opt-in source becomes affected under §72.6; or

(iv) When an opt-in source does not renew its opt-in permit. The Administrator shall deduct allowances equal in number to and with the same or earlier compliance use date as those allocated to the opt-in source under §74.40 for the calendar year in which the opt-in source's opt-in permit expires and all future years following the year in which the opt-in source's opt-in permit expires.

(2) After the allowance deductions under paragraph (b)(1) of this section are made, the Administrator will close the opt-in source's unit account in the Allowance Tracking System. If any allowances remain in the opt-in source's unit account after allowance deductions are made under paragraph (b)(1) of this section, and any deductions made under part 77 of this chapter, the Administrator will establish a general account for the opt-in source, and transfer any remaining allowances into this general account. The designated representative for the opt-in source shall become the authorized account representative for the general account.

§74.47 Transfer of allowances from the replacement of thermal energy—combustion sources.

(a) *Thermal energy plan*—(1) *General provisions.* The designated representative of an opt-in source that seeks to qualify for the transfer of allowances based on the replacement of thermal energy by a replacement unit shall submit a thermal energy plan subject to the requirements of §72.40(b) of this chapter for multi-unit compliance options and this section. The effective period of the thermal energy plan shall begin from January 1 of the first full calendar year for which the plan is approved and end December 31 of the last full calendar year for which the opt-in permit containing the plan is in effect.

(2) *Applicability.* This section shall apply to any designated representative of an opt-in source and any designated representative of each replacement unit seeking to transfer allowances based on the replacement of thermal energy.

(3) *Contents.* Each thermal energy plan shall contain the following elements in a format prescribed by the Administrator:

(i) The calendar year that the thermal energy plan takes effect, which shall be the first year the replacement unit(s) will replace thermal energy of the opt-in source;

(ii) The name, authorized account representative identification number, and telephone number of the designated representative of the opt-in source;

(iii) The name, authorized account representative identification number, and telephone number of the designated representative of each replacement unit;

(iv) The opt-in source's account identification number in the Allowance Tracking System;

(v) Each replacement unit's account identification number in the Allowance Tracking System (ATS);

(vi) The type of fuel used by each replacement unit;

(vii) The allowable SO_2 emissions rate, expressed in lbs/mmBtu, of each replacement unit for the calendar year for which the plan will take effect. When a thermal energy plan is renewed in accordance with paragraph (a)(9) of this section, the allowable SO_2 emission rate at each replacement unit will be the most stringent federally enforceable allowable SO_2 emissions rate applicable at the time of renewal for the calendar year for which the renewal will take effect. This rate will not be annualized;

(viii) The estimated amount of total thermal energy to be reduced at the opt-in source, including all energy flows (steam, gas, or hot water) used for any process or in any heating or cooling application;

(ix) The estimated total thermal energy at each replacement unit for the year prior to the year for which the plan is to take effect, including all energy flows (steam, gas, or hot water) used for any process or in any heating or cooling application;

(x) The estimated amount of total thermal energy at each replacement unit after replacing thermal energy at

the opt-in source, including all energy flows (steam, gas, or hot water) used for any process or in any heating or cooling application;

(xi) The estimated amount of thermal energy at each replacement unit, including all energy flows (steam, gas, or hot water) used for any process or in any heating or cooling application, replacing the thermal energy at the opt-in source;

(xii) Estimated total annual fuel input at each replacement unit after replacing thermal energy at the opt-in source;

(xiii) The number of allowances calculated under paragraph (b) of this section that the opt-in source will transfer to each replacement unit represented in the thermal energy plan.

(xiv) The estimated number of allowances to be deducted for reduced utilization under § 74.44;

(xv) Certification that each replacement unit has entered into a legally binding steam sales agreement to provide the thermal energy, as calculated under paragraph (a)(3)(xi) of this section, that it is replacing for the opt-in source. The designated representative of each replacement unit shall maintain and make available to the Administrator, at the Administrator's request, copies of documents demonstrating that the replacement unit is replacing the thermal energy at the opt-in source.

(4) *Submission*. The designated representative of the opt-in source seeking to qualify for the transfer of allowances based on the replacement of thermal energy shall submit a thermal energy plan to the permitting authority by no later than July 1 of the calendar year prior to the first calendar year for which the plan is to be in effect. The thermal energy plan shall be signed and certified by the designated representative of the opt-in source and each replacement unit covered by the plan.

(5) *Retirement of opt-in source upon enactment of plan*. (i) If the opt-in source will be permanently retired as of the effective date of the thermal energy plan, the opt-in source shall not be required to monitor its emissions upon retirement, consistent with § 75.67 of this chapter, provided that the following requirements are met:

(A) The designated representative of the opt-in source shall include in the plan a request for an exemption from the requirements of part 75 in accordance with § 75.67 of this chapter and shall submit the following statement: ''I certify that the opt-in source (''is'' or ''will be'', as applicable) permanently retired on the date specified in this plan and will not emit any sulfur dioxide or nitrogen oxides after such date.''

(B) The opt-in source shall not emit any sulfur dioxide or nitrogen oxides after the date specified in the plan.

(ii) Notwithstanding the monitoring exemption discussed in paragraph (a)(5)(i) of this section, the designated representative for the opt-in source shall submit the annual compliance certification report provided under paragraph (d) of this section.

(6) *Administrator's action*. If the permitting authority approves a thermal energy plan, the Administrator will annually transfer allowances to the Allowance Tracking System account of each replacement unit, as provided in the approved plan.

(7) *Incorporation, modification and renewal of a thermal energy plan*. (i) An approved thermal energy plan, including any revised or renewed plan that is approved, shall be incorporated into both the opt-in permit for the opt-in source and the Acid Rain permit for each replacement unit governed by the plan. Upon approval, the thermal energy plan shall be incorporated into the Acid Rain permit for each replacement unit pursuant to the requirements for administrative permit amendments under § 72.83 of this chapter.

(ii) In order to revise an opt-in permit to add an approved thermal energy plan or to change an approved thermal energy plan, the designated representative of the opt-in source shall submit a plan or a revised plan under paragraph (a)(4) of this section and meet the requirements for permit revisions under § 72.80 and either § 72.81 or § 72.82 of this chapter.

(8) *Termination of plan*. (i) A thermal energy plan shall be in effect until the earlier of the expiration of the opt-in

permit for the opt-in source or the year for which a termination of the plan takes effect under paragraph (a)(8)(ii) of this section.

(ii) *Termination of plan by opt-in source and replacement units.* A notification to terminate a thermal energy plan in accordance with § 72.40(d) of this chapter shall be submitted no later than December 1 of the calendar year for which the termination is to take effect.

(iii) If the requirements of paragraph (a)(8)(ii) of this section are met and upon revision of the opt-in permit of the opt-in source and the Acid Rain permit of each replacement unit governed by the thermal energy plan to terminate the plan pursuant to § 72.83 of this chapter, the Administrator will adjust the allowances for the opt-in source and the replacement units to reflect the transfer back to the opt-in source of the allowances transferred from the opt-in source under the plan for the year for which the termination of the plan takes effect.

(9) *Renewal of thermal energy plan.* The designated representative of an opt-in source may renew the thermal energy plan as part of its opt-in permit renewal in accordance with § 74.19.

(b) *Calculation of transferable allowances*—(1) *Qualifying thermal energy.* The amount of thermal energy credited towards the transfer of allowances based on the replacement of thermal energy shall equal the qualifying thermal energy and shall be calculated for each replacement unit as follows:

$$\text{Qualifying thermal energy} = \begin{array}{c}\text{the estimated thermal energy}\\ \text{at the replacement unit}\\ \text{under paragraph (a)(3)(xi) of this section}\end{array}$$

(2) *Fuel associated with qualifying thermal energy.* The fuel associated with the qualifying thermal energy at each replacement unit shall be calculated as follows:

$$\begin{array}{c}\text{Fuel associated with}\\ \text{Qualifying thermal energy}\end{array} = \frac{\text{Qualifying thermal energy}}{\text{Efficiency constant}}$$

where,

''Qualifying thermal energy'' for the replacement unit is as defined in paragraph (b)(1) of this section;

''Efficiency constant'' for the replacement unit

= 0.85, where the replacement unit is a boiler

= 0.80, where the replacement unit is a cogenerator

(3) *Allowances transferable from the opt-in source to each replacement unit.* The number of allowances transferable from the opt-in source to each replacement unit for the replacement of thermal energy is calculated as follows:

$$\begin{array}{c}\text{transferable allowances}\\ \text{for the replacement unit}\end{array} = \frac{\begin{array}{c}\text{Fuel Associated with}\\ \text{Qualifying thermal energy}\end{array} \times \begin{array}{c}\text{allowable } SO_2 \text{ emission rate}_{\text{replacement unit}}\\ \text{(in lb/mmBtu)}\end{array}}{2000}$$

where,

''Allowable SO_2 emission rate'' for the replacement unit is as defined in paragraph (a)(3)(vii) of this section;

''Fuel associated with qualifying thermal energy'' is as defined in paragraph (b)(2) of this section;

(c) *Transfer prohibition.* The allowances transferred from the opt-in source to each replacement unit shall not be transferred from the unit account of the replacement unit to any other account in the Allowance Tracking System.

(d) *Compliance*—(1) *Annual compliance certification report.* (i) As required for all opt-in sources, the designated representative of the opt-in source covered by a thermal energy plan must submit an opt-in utilization report for the calendar year as part of its annual compliance certification report under § 74.44(c)(1).

(ii) The designated representative of an opt-in source must submit a thermal energy compliance report for the calendar year as part of the annual compliance certification report, which must include the following elements in a format prescribed by the Administrator:

(A) The name, authorized account representative identification number, and telephone number of the designated representative of the opt-in source;

(B) The name, authorized account representative identification number, and telephone number of the designated representative of each replacement unit;

(C) The opt-in source's account identification number in the Allowance Tracking System (ATS);

(D) The account identification number in the Allowance Tracking System (ATS) for each replacement unit;

(E) The actual amount of total thermal energy reduced at the opt-in source during the calendar year, including all energy flows (steam, gas, or hot water) used for any process or in any heating or cooling application;

(F) The actual amount of thermal energy at each replacement unit, including all energy flows (steam, gas, or hot water) used for any process or in any heating or cooling application, replacing the thermal energy at the opt-in source;

(G) The actual amount of total thermal energy at each replacement unit after replacing thermal energy at the opt-in source, including all energy flows (steam, gas, or hot water) used for any process or in any heating or cooling application;

(H) Actual total fuel input at each replacement unit as determined in accordance with part 75 of this chapter;

(I) Calculations of allowance adjustments to be performed by the Administrator in accordance with paragraph (d)(2) of this section.

(2) *Allowance adjustments by Administrator.* (i) The Administrator will adjust the number of allowances in the Allowance Tracking System accounts for the opt-in source and for each replacement unit to reflect any changes between the estimated values submitted in the thermal energy plan pursuant to paragraph (a) of this section and the actual values submitted in the thermal energy compliance report pursuant to paragraph (d) of this section. The values to be considered for this adjustment include:

(A) The number of allowances transferable by the opt-in source to each replacement unit, calculated in paragraph (b) of this section using the actual, rather than estimated, thermal energy at the replacement unit replacing thermal energy at the opt-in source.

(B) The number of allowances deducted from the Allowance Tracking System account of the opt-in source, calculated under § 74.44(b)(2).

(ii) If the opt-in source includes in the opt-in utilization report under § 74.44 estimates for reductions in heat input, then the Administrator will adjust the number of allowances in the Allowance Tracking System accounts for the opt-in source and for each replacement unit to reflect any differences between the estimated values submitted in the opt-in utilization report and the actual values submitted in the confirmation report pursuant to § 74.44(c)(2).

(3) *Liability.* The owners and operators of an opt-in source or a replacement unit governed by an approved thermal energy plan shall be liable for any violation of the plan or this section at that opt-in source or replacement unit that is governed by the thermal energy plan, including liability for fulfilling the obligations specified in part 77 of this chapter and section 411 of the Act.

§74.48 Transfer of allowances from the replacement of thermal energy—process sources. [Reserved]

§74.49 Calculation for deducting allowances.

(a) *Allowance deduction formula.* The following formula shall be used to determine the total number of allowances to be deducted for the calendar year from the allowances held in an opt-in source's compliance subaccount as of the allowance transfer deadline applicable to that year:

Total allowances deducted = Tons emitted + Allowances deducted for reduced utilization where:

(1)(i) Except as provided in paragraph (a)(1)(ii) of this section, ''Tons emitted'' shall be the total tons of sulfur dioxide emitted by the opt-in source during the calendar year, as reported in accordance with subpart F of this part for combustion sources or subpart G of this part for process sources.

(ii) If the effective date of the opt-in source's permit took effect on a date other than January 1, ''Tons emitted'' for the first calendar year shall be the total tons of sulfur dioxide emitted by the opt-in source during the calendar quarters for which the opt-in source's opt-in permit is effective, as reported in accordance with subpart F of this part for combustion sources or subpart G of this part for process sources.

(2) ''Allowances deducted for reduced utilization'' shall be the total number of allowances deducted for reduced utilization as calculated in accordance with §74.44 for combustion sources or §74.45 for process sources.

§74.50 Deducting opt-in source allowances from ATS accounts.

(a) *Deduction of allowances.* The Administrator may deduct any allowances that were allocated to an opt-in source under §74.40 by removing, from any Allowance Tracking System accounts in which they are held, the allowances in an amount specified in paragraph (d) of this section, under the following circumstances:

(1) When the opt-in source has permanently shut down; or

(2) When the opt-in source has been reconstructed; or

(3) When the opt-in source becomes an affected unit under §72.6 of this chapter; or

(4) When the opt-in source fails to renew its opt-in permit.

(b) *Method of deduction.* The Administrator will deduct allowances beginning with those allowances with the latest recorded date of transfer out of the opt-in source's unit account.

(c) *Notification of deduction.* When allowances are deducted, the Administrator will send a written notification to the authorized account representative of each Allowance Tracking System account from which allowances were deducted. The notification will state:

(1) The serial numbers of all allowances deducted from the account,

(2) The reason for deducting the allowances, and

(3) The date of deduction of the allowances.

(d) *Amount of deduction.* The Administrator may deduct allowances in accordance with paragraph (a) of this section in an amount required to offset any excess emissions in accordance with part 77 of this chapter and when an opt-in source does not hold allowances equal in number to and with the same or earlier compliance use date for the calendar years specified under §74.46(b)(1) (i) through (iv) in an amount required to be deducted under §74.46(b)(1) (i) through (iv).

Subpart F—Monitoring Emissions: Combustion Sources

§74.60 Monitoring requirements.

(a) *Monitoring requirements for combustion sources.* The owner or operator of each combustion source shall meet all of the requirements specified in part 75 of this chapter for the owners and operators of an affected unit to install, certify, operate, and maintain a continuous emission monitoring system, an excepted monitoring system, or an approved alternative monitoring system in accordance with part 75 of this chapter.

(b) *Monitoring requirements for opt-in sources.* The owner or operator of each opt-in source shall install, certify, operate, and maintain a continuous emission monitoring system, an excepted

monitoring system, an approved alternative monitoring system in accordance with part 75 of this chapter.

§ 74.61 Monitoring plan.

(a) *Monitoring plan.* The designated representative of a combustion source shall meet all of the requirements specified under part 75 of this chapter for a designated representative of an affected unit to submit to the Administrator a monitoring plan that includes the information required in a monitoring plan under § 75.53 of this chapter. This monitoring plan shall be submitted as part of the combustion source's opt-in permit application under § 74.14 of this part.

(b) [Reserved]

Subpart G—Monitoring Emissions: Process Sources [Reserved]

PART 75—CONTINUOUS EMISSION MONITORING

Subpart A—General

Sec.
75.1 Purpose and scope.
75.2 Applicability.
75.3 General Acid Rain Program provisions.
75.4 Compliance dates.
75.5 Prohibitions.
75.6 Incorporation by reference.
75.7 EPA Study.
75.8 Relative accuracy and availability analysis.

Subpart B—Monitoring Provisions

75.10 General operating requirements.
75.11 Specific provisions for monitoring SO_2 emissions (SO_2 and flow monitors).
75.12 Specific provisions for monitoring NO_x emissions (NO_x and diluent gas monitors).
75.13 Specific provisions for monitoring CO_2 emissions.
75.14 Specific provisions for monitoring opacity.
75.15 Specific provisions for monitoring SO_2 emissions removal by qualifying Phase I technology.
75.16 Special provisions for monitoring emissions from common by-pass, and multiple stacks for SO_2 emissions and heat input determinations.
75.17 Specific provisions for monitoring emissions from common, by-pass, and multiple stacks for NO_x emission rate.
75.18 Specific provisions for monitoring emissions from common and by-pass stacks for opacity.

Subpart C—Operation and Maintenance Requirements

75.20 Certification and recertification procedures.
75.21 Quality assurance and quality control requirements.
75.22 Reference test methods.
75.23 Alternatives to standards incorporated by reference.
75.24 Out-of-control periods.

Subpart D—Missing Data Substitution Procedures

75.30 General provisions.
75.31 Initial missing data procedures.
75.32 Determination of monitor data availability for standard missing data procedures.
75.33 Standard missing data procedures.
75.34 Units with add-on emission controls.
75.35 Missing data procedures for CO_2 data.
75.36 Missing data procedures for heat input.

Subpart E—Alternative Monitoring Systems

75.40 General demonstration requirements.
75.41 Precision criteria.
75.42 Reliability criteria.
75.43 Accessibility criteria.
75.44 Timeliness criteria.
75.45 Daily quality assurance criteria.
75.46 Missing data substitution criteria.
75.47 Criteria for a class of affected units.
75.48 Petition for an alternative monitoring system.

Subpart F—Recordkeeping Requirements

75.50 General recordkeeping provisions.
75.51 General recordkeeping provisions for specific situations.
75.52 Certification, quality assurance and quality control record provisions.
75.53 Monitoring plan.
75.54 General recordkeeping provisions.
75.55 General recordkeeping provisions for specific situations.
75.56 Certification, quality assurance and quality control record provisions.

Subpart G—Reporting Requirements

75.60 General provisions.
75.61 Notifications.
75.62 Monitoring plan.
75.63 Initial certification or recertification application.
75.64 Quarterly reports.
75.65 Opacity reports.
75.66 Petitions to the Administrator.
75.67 Retired units petitions.

APPENDIX A TO PART 75—SPECIFICATIONS AND TEST PROCEDURES
APPENDIX B TO PART 75—QUALITY ASSURANCE AND QUALITY CONTROL PROCEDURES
APPENDIX C TO PART 75—MISSING DATA ESTIMATION PROCEDURES
APPENDIX D TO PART 75—OPTIONAL SO_2 EMISSIONS DATA PROTOCOL FOR GAS-FIRED AND OIL-FIRED UNITS
APPENDIX E TO PART 75—OPTIONAL NO_x EMISSIONS ESTIMATION PROTOCOL FOR GAS-FIRED PEAKING UNITS AND OIL-FIRED PEAKING UNITS
APPENDIX F TO PART 75—CONVERSION PROCEDURES
APPENDIX G TO PART 75—DETERMINATION OF CO_2 EMISSIONS
APPENDIX H TO PART 75—REVISED TRACEABILITY PROTOCOL NO. 1
APPENDIX I TO PART 75—OPTIONAL F—FACTOR/FUEL FLOW METHOD [RESERVED]
APPENDIX J TO PART 75—COMPLIANCE DATES FOR REVISED RECORDKEEPING REQUIREMENTS AND MISSING DATA PROCEDURES

AUTHORITY: 42 U.S.C. 7601 and 7651k.

SOURCE: 58 FR 3701, Jan. 11, 1993, unless otherwise noted.

Subpart A—General

§ 75.1 Purpose and scope.

(a) *Purpose.* The purpose of this part is to establish requirements for the monitoring, recordkeeping, and reporting of sulfur dioxide, nitrogen oxides, and carbon dioxide emissions, volumetric flow, and opacity data from affected units under the Acid Rain Program pursuant to sections 412 and 821 of the Clean Air Act, 42 U.S.C. 7401–7671q as amended by Public Law 101–549 (November 15, 1990) (the Act).

(b) *Scope.* (1) The regulations established under this part include general requirements for the installation, certification, operation, and maintenance of continuous emission or opacity monitoring systems and specific requirements for the monitoring of SO_2 emissions, volumetric flow, NO_x emissions, opacity, CO_2 emissions and SO_2 emissions removal by qualifying Phase I technologies. Specifications for the installation and performance of continuous emission monitoring systems, certification tests and procedures, and quality assurance tests and procedures are included in appendices A and B to this part. Criteria for alternative monitoring systems and provisions to account for missing data from certified continuous emission monitoring systems or approved alternative monitoring systems are also included in the regulation.

(2) Statistical estimation procedures for missing data are included in appendix C to this part. Optional protocols for estimating SO_2 mass emissions from gas-fired or oil-fired units and NO_x emissions from gas-fired peaking or oil-fired peaking units are included in appendices D and E, respectively, to this part. Requirements for recording and recordkeeping of monitoring data and for quarterly electronic reporting also are specified. Procedures for conversion of monitoring data into units of the standard are included in appendix F to this part. Procedures for the monitoring and calculation of CO_2 emissions are included in appendix G of this part.

[58 FR 3701, Jan. 11, 1993; 58 FR 34126, June 23, 1993; 58 FR 40747, July 30, 1993]

§ 75.2 Applicability.

(a) Except as provided in paragraph (b) of this section, the provisions of this part apply to each affected unit subject to Acid Rain emission limitations or reduction requirements for SO_2 or NO_x.

(b) The provisions of this part do not apply to:

(1) A new unit for which a written exemption has been issued under § 72.7 of this chapter (any new unit that serves one or more generators with total nameplate capacity of 25 MWe or less and burns only fuels with a sulfur content of 0.05 percent or less by weight may apply to the Administrator for an exemption); or

(2) Any unit not subject to the requirements of the Acid Rain Program due to operation of any paragraph of § 72.6(b) of this chapter; or

(3) An affected unit for which a written exemption has been issued under § 72.8 of this chapter and an exception granted under § 75.67 of this part.

[58 FR 3701, Jan. 11, 1993, as amended at 58 FR 15716, Mar. 23, 1993; 60 FR 26516, May 17, 1995]

§ 75.3 General Acid Rain Program provisions.

The provisions of part 72, including the following, shall apply to this part:

(a) § 72.2 (Definitions);

(b) § 72.3 (Measurements, Abbreviations, and Acronyms);

(c) § 72.4 (Federal Authority);

(d) § 72.5 (State Authority);

(e) § 72.6 (Applicability);

(f) § 72.7 (New Unit Exemption);

(g) § 72.8 (Retired Units Exemption);

(h) § 72.9 (Standard Requirements);

(i) § 72.10 (Availability of Information); and

(j) § 72.11 (Computation of Time).

In addition, the procedures for appeals of decisions of the Administrator under this part are contained in part 78 of this chapter.

§ 75.4 Compliance dates.

(a) The provisions of this part apply to each existing Phase I and Phase II unit on February 10, 1993. For substitution or compensating units that are so designated under the acid rain permit which governs the unit and contains the approved substitution or reduced utilization plan, pursuant to § 72.41 or § 72.43 of this chapter, the provisions of this part become applicable upon the issuance date of the acid rain permit. For combustion sources seeking to enter the Opt-in Program in accordance with part 74 of this chapter, the provisions of this part become applicable upon the submission of an opt-in permit application in accordance with § 74.14 of this chapter. In accordance with § 75.20, the owner or operator of each existing affected unit shall ensure that all monitoring systems required by this part for monitoring SO_2, NO_X, CO_2, opacity, and volumetric flow are installed and all certification tests are completed not later than the following dates (except as provided in paragraphs (d) through (h) of this section):

(1) For a unit listed in Table 1 of § 73.10(a) of this chapter, November 15, 1993.

(2) For a substitution or a compensating unit that is designated under an approved substitution plan or reduced utilization plan pursuant to § 72.41 or § 72.43 of this chapter, or for a unit that is designated an early election unit under an approved NO_X compliance plan pursuant to part 76 of this chapter, that is not conditionally approved and that is effective for 1995, the earlier of the following dates:

(i) January 1, 1995; or

(ii) 90 days after the issuance date of the Acid Rain permit (or date of approval of permit revision) that governs the unit and contains the approved substitution plan, reduced utilization plan, or NO_X compliance plan.

(3) For either a Phase II unit, other than a gas-fired unit or an oil-fired unit, or a substitution or compensating unit that is not a substitution or compensating unit under paragraph (a)(2) of this section: January 1, 1995.

(4) For a gas-fired Phase II unit or an oil-fired Phase II unit, January 1, 1995, except that installation and certification tests for continuous emission monitoring systems for NO_X and CO_2 or excepted monitoring systems for NO_X under appendix E or CO_2 estimation under appendix G of this part shall be completed as follows:

(i) For an oil-fired Phase II unit or a gas-fired Phase II unit located in an ozone nonattainment area or the ozone transport region, not later than July 1, 1995; or

(ii) For an oil-fired Phase II unit or a gas-fired Phase II unit not located in an ozone nonattainment area or the ozone transport region, not later than January 1, 1996.

(5) For combustion sources seeking to enter the Opt-in Program in accordance with part 74 of this chapter, the expiration date of a combustion source's opt-in permit under § 74.14(e) of this chapter.

(b) In accordance with § 75.20, the owner or operator of each new affected unit shall ensure that all monitoring systems required under this part for monitoring of SO_2, NO_X, CO_2, opacity, and volumetric flow are installed and all certification tests are completed on or before the later of the following dates:

(1) January 1, 1995, except that for a gas-fired unit or oil-fired unit located in an ozone nonattainment area or the ozone transport region, the date for installation and completion of all certification tests for NO_X and CO_2 monitoring systems shall be July 1, 1995 and for a gas-fired unit or an oil-fired unit not located in an ozone nonattainment area or the ozone transport region, the

date for installation and completion of all certification tests for NO_X and CO_2 monitoring systems shall be January 1, 1996; or

(2) Not later than 90 days after the date the unit commences commercial operation, notice of which date shall be provided under subpart G of this part.

(c) In accordance with § 75.20, the owner or operator of any unit affected under any paragraph of § 72.6(a)(3) (ii) through (vii) of this chapter shall ensure that all monitoring systems required under this part for monitoring of SO_2, NO_X, CO_2, opacity, and volumetric flow are installed and all certification tests are completed on or before the later of the following dates:

(1) January 1, 1995, except that for a gas-fired unit or oil-fired unit located in an ozone nonattainment area or the ozone transport region, the date for installation and completion of all certification tests for NO_X and CO_2 monitoring systems shall be July 1, 1995 and for a gas-fired unit or an oil-fired unit not located in an ozone nonattainment area or the ozone transport region, the date for installation and completion of all certification tests for NO_X and CO_2 monitoring systems shall be January 1, 1996; or

(2) Not later than 90 days after the date the unit becomes subject to the requirements of the Acid Rain Program, notice of which date shall be provided under subpart G of this part.

(d) In accordance with § 75.20, the owner or operator of an existing unit that is shutdown and is not yet operating by the applicable dates listed in paragraph (a) of this section, shall ensure that all monitoring systems required under this part for monitoring of SO_2, NO_X, CO_2, opacity, and volumetric flow are installed and all certification tests are completed not later than the earlier of 45 unit operating days or 180 calendar days after the date that the unit recommences commercial operation of the affected unit, notice of which date shall be provided under subpart G of this part. The owner or operator shall determine and report SO_2 concentration, NO_X emission rate, CO_2 concentration, and flow data for all unit operating hours after the applicable compliance date in paragraph (a) of this section until all required certification tests are successfully completed using either:

(1) The maximum potential concentration of SO_2, the maximum potential NO_X emission rate, the maximum potential flow rate, as defined in section 2.1 of appendix A of this part, or the maximum CO_2 concentration used to determine the maximum potential concentration of SO_2 in section 2.1.1.1 of appendix A of this part; or

(2) Reference methods under § 75.22(b); or

(3) Another procedure approved by the Administrator pursuant to a petition under § 75.66.

(e) In accordance with § 75.20, if the owner or operator of an existing unit completes construction of a new stack, flue, or flue gas desulfurization system after the applicable deadline in paragraph (a) of this section, then the owner or operator shall ensure that all monitoring systems required under this part for monitoring SO_2, NO_X, CO_2, opacity, and volumetric flow are installed on the new stack or duct and all certification tests are completed not later than 90 calendar days after the date that emissions first exit to the atmosphere through the new stack, flue, or flue gas desulfurization system, notice of which date shall be provided under subpart G of this part. Until emissions first pass through the new stack, flue or flue gas desulfurization system, the unit is subject to the appropriate deadline in paragraph (a) of this section. The owner or operator shall determine and report SO_2 concentration, NO_X emission rate, CO_2 concentration, and flow data for all unit operating hours after emissions first pass through the new stack, flue, or flue gas desulfurization system until all required certification tests are successfully completed using either:

(1) The appropriate value for substitution of missing data upon recertification pursuant to § 75.20(b)(3); or

(2) Reference methods under § 75.22(b) of this part; or

(3) Another procedure approved by the Administrator pursuant to a petition under § 75.66.

(f) In accordance with § 75.20, the owner or operator of a gas-fired or oil-fired peaking unit, if planning to use appendix E of this part, shall ensure

that the required certification tests for excepted monitoring systems under appendix E are completed for backup fuel as defined in § 72.2 of this chapter by no later than the later of: 30 unit operating days after the date that the unit first combusted that backup fuel after the certification testing of the primary fuel; or The deadline in paragraph (a) of this section. The owner or operator shall determine and report NO_X emission rate data for all unit operating hours that the backup fuel is combusted after the applicable compliance date in paragraph (a) of this section until all required certification tests are successfully completed using either:

(1) The maximum potential NO_X emission rate; or

(2) Reference methods under § 75.22(b) of this part; or

(3) Another procedure approved by the Administrator pursuant to a petition under § 75.66.

(g) In accordance with § 75.20, whenever the owner or operator of a gas-fired or oil-fired unit uses an excepted monitoring system under appendix D or E of this part and combusts emergency fuel as defined in § 72.2 of this chapter, then the owner or operator shall ensure that a fuel flowmeter measuring emergency fuel is installed and the required certification tests for excepted monitoring systems are completed by no later than 30 unit operating days after the first date after January 1, 1995 that the unit combusts emergency fuel. For all unit operating hours that the unit combusts emergency fuel after January 1, 1995 until the owner or operator installs a flowmeter for emergency fuel and successfully completes all required certification tests, the owner or operator shall determine and report SO_2 mass emission data using either:

(1) The maximum potential fuel flow rate, as described in appendix D of this part, and the maximum sulfur content of the fuel, as described in section 2.1.1.1 of appendix A of this part;

(2) Reference methods under § 75.22(b) of this part; or

(3) Another procedure approved by the Administrator pursuant to a petition under § 75.66.

(h) In accordance with § 75.20, the owner or operator of a unit with a qualifying Phase I technology shall ensure that all certification tests for the inlet and outlet SO_2-diluent continuous emission monitoring systems are completed no later than January 1, 1997 if the unit with a qualifying Phase I technology requires the use of an inlet SO_2 diluent continuous emission monitoring system for the purpose of monitoring SO_2 emissions removal from January 1, 1997 through December 31, 1999.

[60 FR 17131, Apr. 4, 1995, as amended at 60 FR 26516, May 17, 1995]

§ 75.5 Prohibitions.

(a) A violation of any applicable regulation in this part by the owners or operators or the designated representative of an affected source or an affected unit is a violation of the Act.

(b) No owner or operator of an affected unit shall operate the unit without complying with the requirements of §§ 75.2 through 75.67 and appendices A through I of this part.

(c) No owner or operator of an affected unit shall use any alternative monitoring system, alternative reference method, or any other alternative for the required continuous emission monitoring system without having obtained the Administrator's prior written approval in accordance with §§ 75.23, 75.48 and 75.66.

(d) No owner or operator of an affected unit shall operate the unit so as to discharge, or allow to be discharged, emissions of SO_2, NO_x, or CO_2 to the atmosphere without accounting for all such emissions in accordance with the provisions of §§ 75.10 through 75.18.

(e) No owner or operator of an affected unit shall disrupt the continuous emission monitoring system, any portion thereof, or any other approved emission monitoring method, and thereby avoid monitoring and recording SO_2, NO_X, or CO_2 emissions discharged to the atmosphere, except for periods of recertification, or periods when calibration, quality assurance, or maintenance is performed pursuant to § 75.21 and appendix B of this part.

(f) No owner or operator of an affected unit shall retire or permanently

discontinue use of the continuous emission monitoring system, any component thereof, the continuous opacity monitoring system, or any other approved emission monitoring system under this part, except under any one of the following circumstances:

(1) During the period that the unit is covered by an approved retired unit exemption under § 72.8 of this chapter that is in effect; or

(2) The owner or operator is monitoring emissions from the unit with another certified monitoring system that provides emission data for the same pollutant or parameter as the retired or discontinued monitoring system; or

(3) The designated representative submits notification of the date of recertification testing of a replacement monitoring system in accordance with §§ 75.20 and 75.61, and the owner or operator recertifies thereafter a replacement monitoring system in accordance with § 75.20.

[58 FR 3701, Jan. 11, 1993, as amended at 58 FR 40747, July 30, 1993; 60 FR 26517, May 17, 1995]

§ 75.6 Incorporation by reference.

The materials listed in this section are incorporated by reference in the corresponding sections noted. These incorporations by reference were approved by the Director of the Federal Register in accordance with 5 U.S.C. 552(a) and 1 CFR part 51. These materials are incorporated as they existed on the date of approval, and a notice of any change in these materials will be published in the FEDERAL REGISTER. The materials are available for purchase at the corresponding address noted below and are available for inspection at the Office of the Federal Register, 800 North Capitol Street, NW, Suite 700, Washington, DC, at the Public Information Reference Unit of the U.S. EPA, 401 M Street, SW, Washington, DC and at the Library (MD–35), U.S. EPA, Research Triangle Park, North Carolina.

(a) The following materials are available for purchase from the following addresses: American Society for Testing and Material (ASTM), 1916 Race Street, Philadelphia, Pennsylvania 19103; and the University Microfilms International 300 North Zeeb Road, Ann Arbor, Michigan 48106.

(1) ASTM D129–91, Standard Test Method for Sulfur in Petroleum Products (General Bomb Method), for appendices A and D of this part.

(2) ASTM D240–87 (Reapproved 1991), Standard Test Method for Heat of Combustion of Liquid Hydrocarbon Fuels by Bomb Calorimeter, for appendices A, D and F of this part.

(3) ASTM D287–82 (Reapproved 1987), Standard Test Method for API Gravity of Crude Petroleum and Petroleum Products (Hydrometer Method), for appendix D of this part.

(4) ASTM D388–92, Standard Classification of Coals by Rank, incorporation by reference for appendix F of this part.

(5) ASTM D941–88, Standard Test Method for Density and Relative Density (Specific Gravity) of Liquids by Lipkin Bicapillary Pycnometer, for appendix D of this part.

(6) ASTM D1072–90, Standard Test Method for Total Sulfur in Fuel Gases, for appendix D of this part.

(7) ASTM D1217–91, Standard Test Method for Density and Relative Density (Specific Gravity) of Liquids by Bingham Pycnometer, for appendix D of this part.

(8) ASTM D1250–80 (Reapproved 1990), Standard Guide for Petroleum Measurement Tables, for appendix D of this part.

(9) ASTM D1298–85 (Reapproved 1990), Standard Practice for Density, Relative Density (Specific Gravity) or API Gravity of Crude Petroleum and Liquid Petroleum Products by Hydrometer Method, for appendix D of this part.

(10) ASTM D1480–91, Standard Test Method for Density and Relative Density (Specific Gravity) of Viscous Materials by Bingham Pycnometer, for appendix D of this part.

(11) ASTM D1481–91, Standard Test Method for Density and Relative Density (Specific Gravity) of Viscous Materials by Lipkin Bicapillary Pycnometer, for appendix D of this part.

(12) ASTM D1552–90, Standard Test Method for Sulfur in Petroleum Products (High Temperature Method), for appendices A and D of the part.

(13) ASTM D1826–88, Standard Test Method for Calorific (Heating) Value of

Gases in Natural Gas Range by Continuous Recording Calorimeter, for appendix F of this part.

(14) ASTM D1945–91, Standard Test Method for Analysis of Natural Gas by Gas Chromatography, for appendices F and G of this part.

(15) ASTM D1946–90, Standard Practice for Analysis of Reformed Gas by Gas Chromatography, for appendices F and G of this part.

(16) ASTM D1989–92, Standard Test Method for Gross Calorific Value of Coal and Coke by Microprocessor Controlled Isoperibol Calorimeters, for appendix F of this part.

(17) ASTM D2013–86, Standard Method of Preparing Coal Samples for Analysis, for § 75.15 and appendix F of this part.

(18) ASTM D2015–91, Standard Test Method for Gross Calorific Value of Coal and Coke by the Adiabatic Bomb Calorimeter, for § 75.15 and appendices A, D and F of this part.

(19) ASTM D2234–89, Standard Test Methods for Collection of a Gross Sample of Coal, for § 75.15 and appendix F of this part.

(20) ASTM D2382–88, Standard Test Method for Heat of Combustion of Hydrocarbon Fuels by Bomb Calorimeter (High-Precision Method), for appendices D and F of this part.

(21) ASTM D2502–87, Standard Test Method for Estimation of Molecular Weight (Relative Molecular Mass) of Petroleum Oils from Viscosity Measurements, for appendix G of this part.

(22) ASTM D2503–82 (Reapproved 1987), Standard Test Method for Molecular Weight (Relative Molecular Mass) of Hydrocarbons by Thermoelectric Measurement of Vapor Pressure, for appendix G of this part.

(23) ASTM D2622–92, Standard Test Method for Sulfur in Petroleum Products by X-Ray Spectrometry, for appendices A and D of this part.

(24) ASTM D3174–89, Standard Test Method for Ash in the Analysis Sample of Coal and Coke From Coal, for appendix G of this part.

(25) ASTM D3176–89, Standard Practice for Ultimate Analysis of Coal and Coke, for appendices A and F of this part.

(26) ASTM D3177–89, Standard Test Methods for Total Sulfur in the Analysis Sample of Coal and Coke, for § 75.15 and appendix A of this part.

(27) ASTM D3178–89, Standard Test Methods for Carbon and Hydrogen in the Analysis Sample of Coal and Coke, for appendix G of this part.

(28) ASTM D3238–90, Standard Test Method for Calculation of Carbon Distribution and Structural Group Analysis of Petroleum Oils by the n-d-M Method, for appendix G of this part.

(29) ASTM D3246–81 (Reapproved 1987), Standard Test Method for Sulfur in Petroleum Gas By Oxidative Microcoulometry, for appendix D of this part.

(30) ASTM D3286–91a, Standard Test Method for Gross Calorific Value of Coal and Coke by the Isoperibol Bomb Calorimeter, for appendix F of this part.

(31) ASTM D3588–91, Standard Practice for Calculating Heat Value, Compressibility Factor, and Relative Density (Specific Gravity) of Gaseous Fuels, for appendix F of this part.

(32) ASTM D4052–91, Standard Test Method for Density and Relative Density of Liquids by Digital Density Meter, for appendix D of this part.

(33) ASTM D4057–88, Standard Practice for Manual Sampling of Petroleum and Petroleum Products, for appendix D of this part.

(34) ASTM D4177–82 (Reapproved 1990), Standard Practice for Automatic Sampling of Petroleum and Petroleum Products, for appendix D of this part.

(35) ASTM D4239–85, Standard Test Methods for Sulfur in the Analysis Sample of Coal and Coke Using High Temperature Tube Furnace Combustion Methods, for § 75.15 and appendix A of this part.

(36) ASTM D4294–90, Standard Test Method for Sulfur in Petroleum Products by Energy-Dispersive X-Ray Fluorescence Spectroscopy, for appendices A and D of this part.

(37) ASTM D4468–85 (Reapproved 1989), Standard Test Method for Total Sulfur in Gaseous Fuels by Hydrogenolysis and Rateometric Colorimetry, for appendix D of this part.

(38) ASTM D4891–89, Standard Test Method for Heating Value of Gases in Natural Gas Range by Stoichiometric Combustion, for appendix F of this part.

(39) ASTM D5291–92, Standard Test Methods for Instrumental Determination of Carbon, Hydrogen, and Nitrogen in Petroleum Products and Lubricants, for appendix G of this part.

(40) ASTM D5504–94, Standard Test Method for Determination of Sulfur Compounds in Natural Gas and Gaseous Fuels by Gas Chromatography and Chemiluminescence, for appendix D of this part.

(b) The following materials are available for purchase from the American Society of Mechanical Engineers (ASME), 22 Law Drive, Box 2350, Farifield, NJ 07007–2350.

(1) ASME MFC–3M–1989 with September 1990 Errata, Measurement of Fluid Flow in Pipes Using Orifice, Nozzle, and Venturi, for § 75.20 and appendix D of this part.

(2) ASME MFC–4M–1986 (Reaffirmed 1990), Measurement of Gas Flow by Turbine Meters, for § 75.20 and appendix D of this part.

(3) ASME-MFC–5M–1985, Measurement of Liquid Flow in Closed Conduits Using Transit-Time Ultrasonic Flowmeters, for § 75.20 and appendix D of this part.

(4) ASME MFC–6M–1987 with June 1987 Errata, Measurement of Fluid Flow in Pipes Using Vortex Flow Meters, for § 75.20 and appendix D of this part.

(5) ASME MFC–7M–1987 (Reaffirmed 1992), Measurement of Gas Flow by Means of Critical Flow Venturi Nozzles, for § 75.20 and appendix D of this part.

(6) ASME MFC–9M–1988 with December 1989 Errata, Measurement of Liquid Flow in Closed Conduits by Weighing Method, for § 75.20 and appendix D of this part.

(c) The following materials are available for purchase from the American National Standards Institute (ANSI), 11 W. 42nd Street, New York NY 10036: ISO 8316: 1987(E) Measurement of Liquid Flow in Closed Conduits—Method by Collection of the Liquid in a Volumetric Tank, for § 75.20 and appendices D and E of this part.

(d) The following materials are available for purchase from the following address: Gas Processors Association (GPA), 6526 East 60th Street, Tulsa, Oklahoma 74145:

(1) GPA Standard 2172–86, Calculation of Gross Heating Value, Relative Density and Compressibility Factor for Natural Gas Mixtures from Compositional Analysis, for appendices D, E, and F of this part.

(2) GPA Standard 2261–90, Analysis for Natural Gas and Similar Gaseous Mixtures by Gas Chromatography, for appendices D, F, and G of this part.

(e) The following materials are available for purchase from the following address: American Gas Association, 1515 Wilson Boulevard, Arlington VA 22209:

(1) American Gas Association Report No. 3: Orifice Metering of Natural Gas and Other Related Hydrocarbon Fluids, Part 1: General Equations and Uncertainty Guidelines (October 1990 Edition), Part 2: Specification and Installation Requirements (February 1991 Edition) and Part 3: Natural Gas Applications (August 1992 Edition), for § 75.20 and appendices D and E of this part.

(2) American Gas Association Transmission Measurement Committee Report No. 7: Measurement of Gas by Turbine Meters (1985 Edition), for § 75.20 and appendix D of this part.

[58 FR 3701, Jan. 11, 1993, as amended at 60 FR 26517, May 17, 1995; 61 FR 59157, Nov. 20, 1996]

§ 75.7 EPA Study.

The Agency will initiate rulemaking to adjust the equations in the bias test by an amount sufficient to compensate for reference method variance based on a study, which EPA shall complete by October 31, 1993, unless the Administrator determines that adjustments are technically unnecessary or infeasible to properly determine bias.

[58 FR 3701, Jan. 11, 1993; 58 FR 40747, July 30, 1993]

§ 75.8 Relative accuracy and availability analysis.

(a) The Agency will conduct an analysis of monitoring data submitted to EPA under this part between November 15, 1993 and December 31, 1996 to evaluate the appropriateness of the current performance specifications for relative accuracy and availability trigger conditions for missing data substitution for SO_2 and CO_2 pollutant concentration monitors, flow monitors, and NO_X

continuous emission monitoring systems.

(b) Prior to July 1, 1997, the Agency will prepare a report evaluating quarterly report data for the period between January 1, 1994 and December 31, 1996 and initial certification test data. Based upon this evaluation, the Administrator will sign for publication in the FEDERAL REGISTER, either:

(1) A notice that the Agency has completed its analysis and has determined that retaining the current performance specifications for relative accuracy and availability trigger conditions are appropriate; or

(2) A notice that the Agency will develop a proposed rule, based on the results of the study, proposing alternatives to the current performance specifications for relative accuracy and availability trigger conditions.

(c) If the Administrator signs a notice that the Agency will develop a proposed rule, the Administrator will:

(1) Sign a notice of proposed rulemaking by October 31, 1997; and

(2) Sign a notice of final rulemaking by October 31, 1998.

[60 FR 26519, May 17, 1995]

Subpart B—Monitoring Provisions

§ 75.10 General operating requirements.

(a) *Primary Measurement Requirement.* The owner or operator shall measure opacity, and all SO_2, NO_x, and CO_2 emissions for each affected unit as follows:

(1) The owner or operator shall install, certify, operate, and maintain, in accordance with all the requirements of this part, a SO_2 continuous emission monitoring system and a flow monitoring system with the automated data acquisition and handling system for measuring and recording SO_2 concentration (in ppm), volumetric gas flow (in scfh), and SO_2 mass emissions (in lb/hr) discharged to the atmosphere, except as provided in §§ 75.11 and 75.16 and subpart E of this part;

(2) The owner or operator shall install, certify, operate, and maintain, in accordance with all the requirements of this part, a NO_X continuous emission monitoring system (consisting of a NO_X pollutant concentration monitor and an O_2 or CO_2 diluent gas monitor) with the automated data acquisition and handling system for measuring and recording NO_X concentration (in ppm), O_2 or CO_2 concentration (in percent O_2 or CO_2) and NO_X emission rate (in lb/mmBtu) discharged to the atmosphere, except as provided in §§ 75.12 and 75.17 and subpart E of this part. The owner or operator shall account for total NO_X emissions, both NO and NO_2, either by monitoring for both NO and NO_2 or by monitoring for NO only and adjusting the emissions data to account for NO_2;

(3) The owner or operator shall determine CO_2 emissions by using one of the following options, except as provided in § 75.13 and subpart E of this part:

(i) The owner or operator shall install, certify, operate, and maintain, in accordance with all the requirements of this part, a CO_2 continuous emission monitoring system and a flow monitoring system with the automated data acquisition and handling system for measuring and recording CO_2 concentration (in ppm or percent), volumetric gas flow (in scfh), and CO_2 mass emissions (in tons/hr) discharged to the atmosphere;

(ii) The owner or operator shall determine CO_2 emissions based on the measured carbon content of the fuel and the procedures in appendix G of this part to estimate CO_2 emissions (in ton/day) discharged to the atmosphere; or

(iii) The owner or operator shall install, certify, operate, and maintain, in accordance with all the requirements of this part, a flow monitoring system and a CO_2 continuous emission monitoring system using an O_2 concentration monitor in order to determine CO_2 emissions using the procedures in appendix F of this part with the automated data acquisition and handling system for measuring and recording O_2 concentration (in percent), CO_2 concentration (in percent), volumetric gas flow (in scfh), and CO_2 mass emissions (in tons/hr) discharged to the atmosphere; and

(4) The owner or operator shall install, certify, operate, and maintain, in accordance with all the requirements in this part, a continuous opacity monitoring system with the automated data acquisition and handling system

for measuring and recording the opacity of emissions (in percent opacity) discharged to the atmosphere, except as provided in §§ 75.14 and 75.18.

(b) *Primary Equipment Performance Requirements.* The owner or operator shall ensure that each continuous emission monitoring system required by this part meets the equipment, installation, and performance specifications in Appendix A to this part; and is maintained according to the quality assurance and quality control procedures in Appendix B to this part; and shall record SO_2 and NO_x emissions in the appropriate units of measurement (i.e., lb/hr for SO_2 and lb/mmBtu for NO_x).

(c) *Heat Input Measurement Requirement.* The owner or operator shall determine and record the heat input to each affected unit for every hour or part of an hour any fuel is combusted following the procedures in Appendix F to this part.

(d) *Primary equipment hourly operating requirements.* The owner or operator shall ensure that all continuous emission and opacity monitoring systems required by this part are in operation and monitoring unit emissions or opacity at all times that the affected unit combusts any fuel except as provided in § 75.11(e) and during periods of calibration, quality assurance, or preventive maintenance, performed pursuant to § 75.21 and appendix B of this part, periods of repair, periods of backups of data from the data acquisition and handling system, or recertification performed pursuant to § 75.20. The owner or operator shall also ensure, subject to the exceptions above in this paragraph, that all continuous opacity monitoring systems required by this part are in operation and monitoring opacity during the time following combustion when fans are still operating, unless fan operation is not required to be included under any other applicable Federal, State, or local regulation, or permit. The owner or operator shall ensure that the following requirements are met:

(1) The owner or operator shall ensure that each continuous emission monitoring system and component thereof is capable of completing a minimum of one cycle of operation (sampling, analyzing, and data recording) for each successive 15-min interval. The owner or operator shall reduce all SO_2 concentrations, volumetric flow, SO_2 mass emissions, SO_2 emission rate in lb/mmBtu (if applicable), CO_2 concentration, O_2 concentration, CO_2 mass emissions (if applicable), NO_X concentration, and NO_X emission rate data collected by the monitors to hourly averages. Hourly averages shall be computed using at least one data point in each fifteen minute quadrant of an hour, where the unit combusted fuel during that quadrant of an hour. Notwithstanding this requirement, an hourly average may be computed from at least two data points separated by a minimum of 15 minutes (where the unit operates for more than one quadrant of an hour) if data are unavailable as a result of the performance of calibration, quality assurance, or preventive maintenance activities pursuant to § 75.21 and appendix B of this part, backups of data from the data acquisition and handling system, or recertification, pursuant to § 75.20. The owner or operator shall use all valid measurements or data points collected during an hour to calculate the hourly averages. All data points collected during an hour shall be, to the extent practicable, evenly spaced over the hour.

(2) The owner or operator shall ensure that each continuous opacity monitoring system is capable of completing a minimum of one cycle of sampling and analyzing for each successive 10-sec period and one cycle of data recording for each successive 6-min period. The owner or operator shall reduce all opacity data to 6-min averages calculated in accordance with the provisions of part 51, appendix M of this chapter, except where the applicable State implementation plan or operating permit requires a different averaging period, in which case the State requirement shall satisfy this Acid Rain Program requirement.

(3) Failure of an SO_2, CO_2 or O_2 pollutant concentration monitor, flow monitor, or NO_X continuous emission monitoring system, to acquire the minimum number of data points for calculation of an hourly average in paragraph (d)(1) of this section, shall result in the failure to obtain a valid hour of data and the loss of such component

data for the entire hour. An hourly average NO_X or SO_2 emission rate in lb/mmBtu is valid only if the minimum number of data points are acquired by both the pollutant concentration monitor (NO_X or SO_2) and the diluent monitor (CO_2 or O_2). Except for SO_2 emission rate data in lb/mmBtu, if a valid hour of data is not obtained, the owner or operator shall estimate and record emission or flow data for the missing hour by means of the automated data acquisition and handling system, in accordance with the applicable procedure for missing data substitution in subpart D of this part.

(e) *Optional backup monitor requirements.* If the owner or operator chooses to use two or more continuous emission monitoring systems, each of which is capable of monitoring the same stack or duct at a specific affected unit, or group of units using a common stack, then the owner or operator shall designate one monitoring system as the primary monitoring system, and shall record this information in the monitoring plan, as provided for in § 75.53. The owner or operator shall designate the other monitoring system(s) as backup monitoring system(s) in the monitoring plan. The backup monitoring system(s) shall be designated as redundant backup monitoring system(s), non-redundant backup monitoring system(s), or reference method backup system(s), as described in § 75.20(d). When the certified primary monitoring system is operating and not out-of-control as defined in § 75.24, only data from the certified primary monitoring system shall be reported as valid, quality-assured data. Thus, data from the backup monitoring system may be reported as valid, quality-assured data only when the backup is operating and not out-of-control as defined in § 75.24 (or in the applicable reference method in appendix A of part 60 of this chapter) and when the certified primary monitoring system is not operating (or is operating but out-of-control). A particular monitor may be designated both as a certified primary monitor for one unit and as a certified redundant backup monitor for another unit.

(f) *Minimum measurement capability requirement.* The owner or operator shall ensure that each continuous emission monitoring system and component thereof is capable of accurately measuring, recording, and reporting data, and shall not incur a full scale exceedance, except as provided in sections 2.1.1.4, 2.1.2.4, and 2.1.4 of appendix A of this part.

(g) Minimum Recording and Reporting Requirements. The owner or operator shall record and the designated representative shall report the hourly, daily, quarterly, and annual information collected under the requirements of this part as specified in subparts F and G of this part.

[58 FR 3701, Jan. 11, 1993, as amended at 60 FR 26519, May 17, 1995]

§ 75.11 Specific provisions for monitoring SO_2 emissions (SO_2 and flow monitors).

(a) *Coal-fired units.* The owner or operator shall meet the general operating requirements in § 75.10 for an SO_2 continuous emission monitoring system and a flow monitoring system for each affected coal-fired unit while the unit is combusting coal and/or any other fuel, except as provided in paragraph (e) of this section, in § 75.16, and in subpart E of this part. During hours in which only natural gas or gaseous fuel with a sulfur content no greater than natural gas (i.e., >20 grains per 100 standard cubic feet (gr/100 scf) is combusted in the unit, the owner or operator shall comply with the applicable provisions of paragraph (e)(1), (e)(2), or (e)(3) of this section.

(b) *Moisture correction.* Where SO_2 concentration is measured on a dry basis, the owner or operator shall either:

(1) Install, operate, and maintain a continuous moisture monitor for measuring and recording the moisture content of the flue gases; or

(2) Determine the moisture content of the flue gases continuously (or on an hourly basis) and correct the measured hourly volumetric flow rates for moisture when calculating SO_2 mass emissions (in lb/hr) using the procedures in appendix F of this part.

(c) *Unit with no location for a flow monitor meeting siting requirements.* Where no location exists that satisfies the minimum physical siting criteria

in appendix A to this part for installation of a flow monitor in either the stack or the ducts serving an affected unit or installation of a flow monitor in either the stack or ducts is demonstrated to the satisfaction of the Administrator to be technically infeasible, either:

(1) The designated representative shall petition the Administrator for an alternative method for monitoring volumetric flow in accordance with § 75.66; or

(2) The owner or operator shall construct a new stack or modify existing ductwork to accommodate the installation of a flow monitor, and the designated representative shall petition the Administrator for an extension of the required certification date given in § 75.4 and approval of an interim alternative flow monitoring methodology in accordance with § 75.66. The Administrator may grant existing Phase I affected units an extension to January 1, 1995, and existing Phase II affected units an extension to January 1, 1996 for the submission of the certification application for the purpose of constructing a new stack or making substantial modifications to ductwork for installation of a flow monitor; or

(3) The owner or operator shall install a flow monitor in any existing location in the stack or ducts serving the affected unit at which the monitor can achieve the performance specifications of this part.

(d) *Gas-fired and oil-fired units.* The owner or operator of an affected unit that qualifies as a gas-fired or oil-fired unit, as defined in § 72.2 of this chapter, based on information submitted by the designated representative in the monitoring plan, shall measure and record SO_2 emissions:

(1) By meeting the general operating requirements in § 75.10 for an SO_2 continuous emission monitoring system and flow monitoring system. If this option is selected, the owner or operator shall comply with the applicable provisions in paragraph (e)(1), (e)(2), or (e)(3) of this section during hours in which the unit combusts only natural gas (or gaseous fuel with a sulfur content no greater than natural gas); or

(2) By providing other information satisfactory to the Administrator using the applicable procedures specified in appendix D of this part for estimating hourly SO_2 mass emissions. Appendix D shall not, however, be used when the unit combusts gaseous fuel with a sulfur content greater than natural gas (i.e., ≤20 gr/100 scf); when such fuel is burned, the owner or operator shall comply with the provisions of paragraph (e)(4) of this section.

(e) Units with SO_2 continuous emission monitoring systems during the combustion of gaseous fuel. The owner or operator of an affected unit with an SO_2 continuous emission monitoring system shall, during any hours in which the unit combusts only gaseous fuel, determine SO_2 emissions in accordance with paragraph (e)(1), (e)(2), (e)(3) or (e)(4) of this section, as applicable.

(1) When pipeline natural gas is burned in the unit, the owner or operator may, in lieu of operating and recording data from the SO_2 monitoring system, determine SO_2 emissions by using the heat input calculated using a certified flow monitoring system and a certified diluent monitor, in conjunction with the default SO_2 emission rate for pipeline natural gas from section 2.3.2 of appendix D of this part, and Equation F–23 in appendix F of this part. When this option is chosen, the owner or operator shall perform the necessary data acquisition and handling system tests under § 75.20(c), and shall meet all quality control and quality assurance requirements in appendix B of this part for the flow monitor and the diluent monitor.

(2) When gaseous fuel with a sulfur content no greater than natural gas (i.e., ≤ 20 gr/100 scf) is combusted in the unit, the owner or operator may, in lieu of operating and recording data from the SO_2 monitoring system, determine SO_2 emissions by certifying an excepted monitoring system in accordance with § 75.20 and with appendix D of this part, by following the fuel sampling and analysis procedures in section 2.3.1 of appendix D of this part, by meeting the recordkeeping requirements of § 75.55, and by meeting all quality control and quality assurance requirements for fuel flowmeters in appendix D of this part. If this compliance option is selected, the hourly unit

heat input reported under § 75.54(b)(5) shall be determined using a certified flow monitoring system and a certified diluent monitor, in accordance with the procedures in section 5.2 of appendix F of this part. The flow monitor and diluent monitor shall meet all of the applicable quality control and quality assurance requirements of appendix B of this part.

(3) When gaseous fuel with a sulfur content no greater than natural gas (i.e., ≤ 20 gr/100 scf) is burned in the unit, the owner or operator may determine SO_2 mass emissions by using a certified SO_2 continuous monitoring system, in conjunction with a certified flow rate monitoring system. However, on and after January 1, 1999, the SO_2 monitoring system shall be subject to the following provisions; prior to January 1, 1999, the owner or operator may comply with these provisions:

(i) When conducting the daily calibration error tests of the SO_2 monitoring system, as required by section 2.1.1 in appendix B of this part, the zero-level calibration gas shall have an SO_2 concentration of 0.0 percent of span. This restriction does not apply if gaseous fuel is burned in the affected unit only during unit startup.

(ii) The zero-level calibration response of the SO_2 monitoring system shall be adjusted, either automatically or manually, to read exactly 0.0 ppm SO_2 following each successful daily calibration error test conducted in accordance with section 2.1.1 in appendix B of this part. This calibration adjustment is optional if gaseous fuel is burned in the affected unit only during unit startup.

(iii) Any hourly average SO_2 concentration of less than 2.0 ppm recorded by the SO_2 monitoring system shall be adjusted to a default value of 2.0 ppm, for reporting purposes. Such adjusted hourly averages shall be considered to be quality–assured data, provided that the monitoring system is operating and is not out–of–control with respect to any of the quality assurance tests required by appendix B of this part (i.e., daily calibration error, linearity and relative accuracy test audit).

(iv) Notwithstanding the requirements of sections 2.1.1.1 and 2.1.1.2 of appendix A of this part, a second, low-scale measurement range is not required for units that sometimes burn natural gas (or gaseous fuel with a sulfur content no greater than natural gas) and at other times burn higher-sulfur fuel(s) such as coal or oil. For units that burn only natural gas (or gaseous fuel with a sulfur content no greater than natural gas) and burn no other type(s) of fuel(s), the owner or operator shall set the span of the SO_2 monitoring system to a value no greater than 200 ppm.

(4) During any hours in which a unit combusts only gaseous fuel(s) with a sulfur content greater than natural gas (i.e., > 20 gr/100 scf), the owner or operator shall meet the general operating requirements in § 75.10 for an SO_2 continuous emission monitoring system and a flow monitoring system.

(f) *Other units.* The owner or operator of an affected unit that combusts wood, refuse, or other material in addition to oil or gas shall comply with the monitoring provisions for coal-fired units specified in paragraph (a) of this section.

[58 FR 3701, Jan. 11, 1993, as amended at 60 FR 26520, 26566, May 17, 1995; 61 FR 59157, Nov. 20, 1996]

§ 75.12 Specific provisions for monitoring NO_x emissions (NO_x and diluent gas monitors).

(a) *Coal-fired units, gas-fired nonpeaking units or oil-fired nonpeaking units.* The owner or operator shall meet the general operating requirements in § 75.10 of this part for a NO_x continuous emission monitoring system for each affected coal-fired unit, gas-fired nonpeaking unit, or oil-fired nonpeaking unit, except as provided in paragraph (c) of this section, § 75.17, and subpart E of this part. The diluent gas monitor in the NO_x continuous emission monitoring system may measure either O_2 or CO_2 concentration in the flue gases.

(b) *Determination of NO_x emission rate.* The owner or operator shall calculate hourly, quarterly, and annual NO_x emission rates (in lb/mmBtu) by combining the NO_x concentration (in ppm) and diluent concentration (in percent O_2 or CO_2) measurements according to the procedures in appendix F of this part.

(c) *Gas-fired peaking units or oil-fired peaking units.* The owner or operator of an affected unit that qualifies as a gas-fired peaking unit or oil-fired peaking unit, as defined in §72.2 of this chapter, based on information submitted by the designated representative in the monitoring plan shall comply with one of the following:

(1) Meet the general operating requirements in §75.10 for a NO_X continuous emission monitoring system; or

(2) Provide information satisfactory to the Administrator using the procedure specified in appendix E of this part for estimating hourly NO_X emission rate. However, if in the years after certification of an excepted monitoring system under appendix E of this part, a unit's operations exceed a capacity factor of 20 percent in any calendar year or exceed a capacity factor of 10.0 percent averaged over three years, the owner or operator shall install, certify, and operate a NO_X continuous emission monitoring system no later than December 31 of the following calendar year.

(d) *Other units.* The owner or operator of an affected unit that combusts wood, refuse, or other material in addition to oil or gas shall comply with the monitoring provisions specified in paragraph (a) of this section.

[58 FR 3701, Jan. 11, 1993, as amended at 60 FR 26520, May 17, 1995]

§75.13 Specific provisions for monitoring CO_2 emissions.

(a) *CO_2* continuous emission monitoring system. If the owner or operator chooses to use the continuous emission monitoring method, then the owner or operator shall meet the general operating requirements in §75.10 for a CO_2 continuous emission monitoring system and flow monitoring system for each affected unit. The owner or operator shall comply with the applicable provisions specified in §75.11 (a) through (e) or §75.16, except that the phrase ''SO_2 continuous emission monitoring system'' is replaced with ''CO_2 continuous emission monitoring system,'' the term ''maximum potential concentration for SO_2'' is replaced with ''maximum CO_2 concentration,'' and the phrase ''SO_2 mass emissions'' is replaced with ''CO_2 mass emissions.''

(b) *Determination of CO_2 emissions using Appendix G of this part.* If the owner or operator chooses to use the appendix G method, then the owner or operator may provide information satisfactory to the Administrator for estimating daily CO_2 mass emissions based on the measured carbon content of the fuel and the amount of fuel combusted. For units with wet flue gas desulfurization systems or other add-on emissions controls generating CO_2, the owner or operator shall use the procedures in appendix G to this part to estimate both combustion-related emissions based on the measured carbon content of the fuel and the amount of fuel combusted and sorbent-related emissions based on the amount of sorbent injected. The owner or operator shall calculate daily, quarterly, and annual CO_2 mass emissions (in tons) in accordance with the procedures in appendix G to this part.

(c) *Determination of CO_2mass emissions using an O_2monitor according to appendix F.* If the owner or operator chooses to use the appendix F method, then the owner or operator may determine hourly CO_2 concentration and mass emissions with a flow monitoring system, a continuous O_2 concentration monitor, fuel F and F_c factors, and where O_2 concentration is measured on a dry basis, hourly corrections for the moisture content of the flue gases, using the methods and procedures specified in appendix F to this part. For units using a common stack, multiple stack, or bypass stack, the owner or operator may use the provisions of §75.16, except that the phrase ''SO_2 continuous emission monitoring system'' is replaced with ''CO_2 continuous emission monitoring system,'' the term ''maximum potential concentration of SO'' is replaced with ''maximum CO_2 concentration,'' and the phrase ''SO_2 mass emissions'' is replaced with ''CO_2 mass emissions.''

[58 FR 3701, Jan. 11, 1993, as amended at 60 FR 26521, May 17, 1995]

§75.14 Specific provisions for monitoring opacity.

(a) *Coal-fired units and oil-fired units.* The owner or operator shall meet the general operating provisions in §75.10 of this part for a continuous opacity monitoring system for each affected

coal-fired or oil-fired unit, except as provided in paragraphs (b), (c), and (d) of this section and in § 75.18. Each continuous opacity monitoring system shall meet the design, installation, equipment, and performance specifications in Performance Specification 1 in appendix B to part 60 of this chapter. Any continuous opacity monitoring system previously certified to meet Performance Specification 1 shall be deemed certified for the purposes of this part.

(b) *Unit with wet flue gas pollution control system.* If the owner or operator can demonstrate that condensed water is present in the exhaust flue gas stream and would impede the accuracy of opacity measurements, then the owner or operator of an affected unit equipped with a wet flue gas pollution control system for SO_2 emissions or particulates is exempt from the opacity monitoring requirements of this part.

(c) *Gas-fired units.* The owner or operator of an affected unit that qualifies as gas-fired, as defined in § 72.2 of this chapter, based on information submitted by the designated representative in the monitoring plan is exempt from the opacity monitoring requirements of this part. Whenever a unit previously categorized as a gas-fired unit is recategorized as another type of unit by changing its fuel mix, the owner or operator shall install, operate, and certify a continuous opacity monitoring system as required by paragraph (a) of this section by December 31 of the following calendar year.

(d) *Diesel-fired units and dual-fuel reciprocating engine units.* The owner or operator of an affected diesel-fired unit or a dual-fuel reciprocating engine unit is exempt from the opacity monitoring requirements of this part.

[58 FR 3701, Jan. 11, 1993, as amended at 61 FR 25581, May 22, 1996]

§ 75.15 Specific provisions for monitoring SO_2 emissions removal by qualifying Phase I technology.

(a) *Additional monitoring provisions.* In addition to the SO_2 monitoring requirements in § 75.11 or § 75.16, for the purposes of adequately monitoring SO_2 emissions removal by qualifying Phase I technology operated pursuant to § 72.42 of this chapter, the owner or operator shall, except where specified below, use both an inlet SO_2-diluent continuous emission monitoring system and an outlet SO_2-diluent continuous emission monitoring system, consisting of an SO_2 pollutant concentration monitor and a diluent CO_2 or O_2 monitor. (The outlet SO_2-diluent continuous emission monitoring system may consist of the same SO_2 pollutant concentration monitor that is required under § 75.11 or § 75.16 for the measurement of SO_2 emissions discharged to the atmosphere and the diluent monitor used as part of the NO_X continuous emission monitoring system that is required under § 75.12 or § 75.17 for the measurement of NO_X emissions discharged into the atmosphere.) During the period when required to measure emissions removal efficiency, from January 1, 1997 through December 31, 1999, the owner or operator shall meet the general operating requirements in § 75.10 for both the inlet and the outlet SO_2-diluent continuous emission monitoring systems, and in addition, the owner or operator shall comply with the monitoring provisions in this section. On January 1, 2000, the owner or operator may cease operating and/or reporting on the inlet SO_2-diluent continuous emission monitoring system results for the purposes of the Acid Rain Program.

(1) *Pre-combustion technology.* The owner or operator of an affected unit for which a precombustion technology has been employed for the purpose of meeting qualifying Phase I technology requirements shall use sections 4 and 5 of Method 19 in appendix A of part 60 of this chapter to estimate, daily, for the purposes of this part, the percentage SO_2 removal efficiency from such technology, and shall substitute the following ASTM methods for sampling, preparation, and analysis of coal for those cited in Method 19: ASTM D2234–89, Standard Test Method for Collection of a Gross Sample of Coal (Type I, Conditions A, B, or C and systematic spacing), ASTM D2013–86, Standard Method of Preparing Coal Samples for Analysis, ASTM D2015–91, Standard Test Method for Gross Calorific Value of Coal and Coke by the Adiabatic Calorimeter, and ASTM D3177–89, Standard

Test Methods for Total Sulfur in the Analysis Sample of Coal and Coke, or ASTM D4239–85, Standard Test Method for Sulfur in the Analysis Sample of Coal and Coke Using High Temperature Tube Furnace Combustion Methods. Each of the preceding ASTM methods is incorporated by reference in § 75.6.

(2) *Combustion technology*. The owner or operator of an affected unit for which a combustion technology has been installed and operated for the purpose of meeting qualifying Phase I technology requirements shall use the coal sampling and analysis procedures in paragraph (a)(1) of this section and Equation 5 in paragraph (b) of this section to estimate the percentage SO_2 removal efficiency from such technology.

(3) *Post-combustion technology*. The owner or operator of an affected unit for which a post-combustion technology has been installed and operated for the purpose of meeting qualifying Phase I technology requirements shall install, certify, operate, and maintain both an inlet and an outlet SO_2-diluent continuous emission monitoring system.

(i) Both inlet and outlet SO_2-diluent continuous emission monitoring systems shall consist of an SO_2 pollutant concentration monitor and a diluent gas monitor for measuring the O_2 or CO_2 concentrations in the flue gas and shall measure and record average hourly SO_2 emission rates (in lb/mmBtu).

(ii) The SO_2-diluent continuous emission monitoring systems for measuring and recording the SO_2 emissions removal by a qualifying Phase I technology shall meet all the requirements of this part during the period when required to measure emissions removal, from January 1, 1997 through December 31, 1999, and shall meet the certification deadline specified in § 75.4.

(iii) The SO_2 pollutant concentration monitors and the diluent gas monitors at the inlet and outlet of the SO_2 emission controls shall meet all requirements specified in appendices A and B to this part.

(b) *Demonstration of SO_2 emissions removal efficiency*. The owner or operator shall demonstrate the average annual percentage SO_2 emissions removal efficiency of the installed technology or combination of technologies during the period when required to measure emissions removal, from January 1, 1997 through December 31, 1999, according to the following procedures:

(1) Calculate the average annual SO_2 emissions removal efficiency using Equations 1–7 as follows:

$$\%R=[100[1.0-(1.0-\%R_f/100)\quad(1.0-\%R_g/100)\quad(1.0-\%R_c/100)]\quad (Eq.1)$$

where,

$\%R$ = Overall percentage SO_2 emissions removal efficiency.

$\%R_f$ = Percentage SO_2 emissions removal efficiency from fuel pretreatment, calculated from Equation 19–22 in Reference Method 19 in Appendix A to part 60 of this chapter.

$\%R_c$ = Percentage SO_2 emissions removal of combustion emission controls, calculated from Equation 5.

$\%R_g$ = Percentage SO_2 removal efficiency of post-combustion emission controls, calculated from Equation 2.

$$\%R_g=100\left[1.0-\frac{E_o}{E_i}\right]$$

(Eq.2)

where,

E_o=Average hourly SO_2 emission rate in lb/mmBtu, measured at the outlet of the post-combustion emission controls during the calendar year, calculated from Equation 3.

E_i=Average hourly SO_2 emission rate in lb/mmBtu, measured at the inlet to the post-combustion emission controls during the calendar year, calculated from Equation 4.

$$E_o=\frac{\sum_{j=1}^{n} E_{hoj}}{n}$$

(Eq. 3)

where,

E_{hoj}=Each hourly SO_2 emission rate in lb/mmBtu, measured by the continuous emission monitoring system at the outlet to the post-combustion emission controls.

n=Total unit operating hours during which the SO_2 continuous emission monitoring system at the outlet of the emission controls collected quality-assured data.

$$E_i = \frac{\sum_{j=1}^{m} E_{hij}}{m}$$

(Eq. 4)

where,

E_{hij}=Each hourly SO_2 emission rate in lb/mmBtu, measured by the continuous emission monitoring system at the inlet to the post-combustion emission controls.

m=Total unit operating hours during which the SO_2 continuous emission monitoring system at the inlet to the emission controls collected quality-assured data.

$$\%R_c = 100\left[1.0 - \frac{E_{co}}{E_{ci}}\right] \qquad \text{(Eq. 5)}$$

where,

E_{co}=Average hourly SO_2 emission rate in lb/mmBtu, measured at the outlet of the combustion emission controls during the calendar year, calculated from Equation 6.

E_{ci}=Average hourly SO_2 emission rate in lb/mmBtu, determined by coal sampling and analysis according to the methods and procedures in paragraph (a)(1) of this section, calculated from Equation 7.

$$E_{co} = \frac{\sum_{j=1}^{q} E_{ocj}}{q}$$

(Eq. 6)

where,

E_{ocj}=Each hourly SO_2 emission rate in lb/mmBtu, measured by the continuous emission monitoring system at the outlet to the combustion controls.

q=Total unit operating hours for which the outlet SO_2 continuous emission monitoring system collected quality-assured data during the calendar year.

$$E_{ci} = \frac{\sum_{j=1}^{p} E_{icj}}{p} \qquad \text{Eq. 7)}$$

where,

E_{icj}=Each average hourly SO_2 emission rate in lb/mmBtu, determined by the coal sampling and analysis methods and procedures in paragraph (a)(1) of this section and calculated using appendix A, Method 19 of part 60 of this chapter, performed once a day.

p=Total unit operation hours during which coal sampling and analysis is performed to determine SO_2 emissions at the inlet to the combustion controls.

(2) The owner or operator shall include all periods when fuel is being combusted in determining total unit operating hours for the purpose of calculating the average SO_2 emissions removal efficiency during the calendar year.

(3) The owner or operator shall use only quality-assured SO_2 emissions data in the calculation of SO_2 emissions removal efficiency.

(4) Compliance with the 90-percent SO_2 emissions removal efficiency requirement under this part is determined annually beginning January 1, 1997 through December 31, 1999.

[58 FR 3701, Jan. 11, 1993, as amended at 60 FR 26521, May 17, 1995; 61 FR 25582, May 22, 1996]

§75.16 Special provisions for monitoring emissions from common, bypass, and multiple stacks for SO_2 emissions and heat input determinations.

(a) *Phase I common stack procedures.* Prior to January 1, 2000, the following procedures shall be used when more than one unit utilize a common stack:

(1) *Only Phase I units or only Phase II units using common stack.* When a Phase I unit uses a common stack with one or more other Phase I units, but no other units, or when a Phase II unit uses a common stack with one or more Phase II units, but no other units, the owner or operator shall either:

(i) Install, certify, operate, and maintain an SO_2 continuous emission monitoring system and flow monitoring system in the duct to the common stack from each affected unit; or

(ii) Install, certify, operate, and maintain an SO_2 continuous emission monitoring system and flow monitoring system in the common stack; and

(A) Combine emissions for the affected units for recordkeeping and compliance purposes; or

(B) Provide information satisfactory to the Administrator on methods for apportioning SO_2 mass emissions measured in the common stack to each of the affected units. The designated representative shall provide the information to the Administrator through a petition submitted under §75.66. The Administrator may approve such substitute methods for apportioning SO_2 mass emissions measured in a common stack whenever the method ensures complete and accurate accounting of all emissions regulated under this part.

(2) *Phase I unit using common stack with non-Phase I unit(s).* When one or more Phase I units uses a common stack with one or more Phase II or nonaffected units, the owner or operator shall either:

(i) Install, certify, operate, and maintain an SO_2 continuous emission monitoring system and flow monitoring system in the duct to the common stack from each affected unit; or

(ii) Install, certify, operate, and maintain an SO_2 continuous emission monitoring system and flow monitoring system in the common stack; and

(A) Designate any Phase II unit(s) as a substitution or compensating unit(s) in accordance with part 72 of this chapter and any nonaffected unit(s) as opt-in units in accordance with part 74 of this chapter and combine emissions for recordkeeping and compliance purposes; or

(B) Install, certify, operate, and maintain an SO_2 continuous emission monitoring system and flow monitoring system in the duct from each Phase II or nonaffected unit; calculate SO_2 mass emissions from the Phase I units as the difference between SO_2 mass emissions measured in the common stack and SO_2 mass emissions measured in the ducts of the Phase II and nonaffected units; record and report the calculated SO_2 mass emissions from the Phase I units, not to be reported as an hourly average value less than zero; and combine emissions for the Phase I units for compliance purposes; or

(C) Install, certify, operate, and maintain an SO_2 continuous emission monitoring system and flow monitoring system in the duct from each Phase I or nonaffected unit; calculate SO_2 mass emissions from the Phase II units as the difference between SO_2 mass emissions measured in the common stack and SO_2 mass emissions measured in the ducts of the Phase I and nonaffected units, not to be reported as an hourly average value less than zero; and combine emissions for the Phase II units for recordkeeping and compliance purposes; or

(D) Record the combined emissions from all units as the combined SO_2 mass emissions for the Phase I units for recordkeeping and compliance purposes; or

(E) Provide information satisfactory to the Administrator on methods for apportioning SO_2 mass emissions measured in the common stack to each of the units using the common stack. The designated representative shall provide the information to the Administrator through a petition submitted under § 75.66. The Administrator may approve such substitute methods for apportioning SO_2 mass emissions measured in a common stack whenever the method ensures complete and accurate accounting of all emissions regulated under this part.

(3) *Phase II unit using common stack with non-affected unit(s).* When one or more Phase II units uses a common stack with one or more nonaffected units, the owner or operator shall follow the procedures in paragraph (b)(2) of this section.

(b) *Phase II common stack procedures.* On or after January 1, 2000, the following procedures shall be used when more than one unit uses a common stack:

(1) *Unit utilizing common stack with other affected unit(s).* When a Phase I or Phase II affected unit utilizes a common stack with one or more other Phase I or Phase II affected units, but no nonaffected units, the owner or operator shall either:

(i) Install, certify, operate, and maintain an SO_2 continuous emission monitoring system and flow monitoring system in the duct to the common stack from each affected unit; or

(ii) Install, certify, operate, and maintain an SO_2 continuous emission monitoring system and flow monitoring system in the common stack; and

(A) Combine emissions for the affected units for recordkeeping and compliance purposes; or

(B) Provide information satisfactory to the Administrator on methods for apportioning SO_2 mass emissions measured in the common stack to each of the Phase I and Phase II affected units. The designated representative shall provide the information to the Administrator through a petition submitted under § 75.66. The Administrator may approve such substitute methods for apportioning SO_2 mass emissions measured in a common stack whenever the method ensures complete and accurate accounting of all emissions regulated under this part.

(2) *Unit utilizing common stack with nonaffected unit(s).* When one or more Phase I or Phase II affected units utilizes a common stack with one or more nonaffected units, the owner or operator shall either:

(i) Install, certify, operate, and maintain an SO_2 continuous emission monitoring system and flow monitoring system in the duct to the common stack from each Phase I and Phase II unit; or

(ii) Install, certify, operate, and maintain an SO_2 continuous emission monitoring system and flow monitoring system in the common stack; and

(A) Designate the nonaffected units as opt-in units in accordance with part 74 of this chapter and combine emissions for recordkeeping and compliance purposes; or

(B) Install, certify, operate, and maintain an SO_2 continuous emission monitoring system and flow monitoring system in the duct from each nonaffected unit; determine SO_2 mass emissions from the affected units as the difference between SO_2 mass emissions measured in the common stack and SO_2 mass emissions measured in the ducts of the nonaffected units, not to be reported as an hourly average value less than zero; and combine emissions for the Phase I and Phase II affected units for recordkeeping and compliance purposes; or

(C) Record the combined emissions from all units as the combined SO_2 mass emissions for the Phase I and Phase II affected units for record-keeping and compliance purposes; or

(D) Petition through the designated representative and provide information satisfactory to the Administrator on methods for apportioning SO_2 mass emissions measured in the common stack to each of the units using the common stack. The Administrator may approve such demonstrated substitute methods for apportioning SO_2 mass emissions measured in a common stack whenever the demonstration ensures complete and accurate accounting of all emissions regulated under this part.

(c) *Unit with bypass stack.* Whenever any portion of the flue gases from an affected unit can be routed so as to avoid the installed SO_2 continuous emission monitoring system and flow monitoring system, the owner or operator shall either:

(1) Install, certify, operate, and maintain an SO_2 continuous emission monitoring system or flow monitoring system on the bypass flue, duct, or stack gas stream and calculate SO_2 mass emissions for the unit as the sum of the emissions recorded by all required monitoring systems; or

(2) Monitor SO_2 mass emissions on the bypass flue, duct, or stack gas stream using the reference methods in § 75.22(b) for SO_2 and flow and calculate SO_2 mass emissions for the unit as the sum of the emissions recorded by the installed monitoring systems on the main stack and the emissions measured by the reference method monitoring systems; or

(3) Where a Federal, State, or local regulation or permit prohibits operation of the bypass stack or duct or limits operation of the bypass stack or duct to emergency situations resulting from the malfunction of a flue gas desulfurization system record the following values for each hour during which emissions pass through the bypass stack or duct: the maximum potential concentration for SO_2 as determined under section 2 of appendix A of this part, and the hourly volumetric flow value that would be substituted for the flow monitor installed on the main stack or flue under the missing data procedures in subpart D of this part if data from the flow monitor installed on the main stack or flue were missing for the hour. Calculate SO_2 mass emissions for the unit as the sum of the emissions calculated with the substitute values and the emissions recorded by the SO_2 and flow monitoring systems installed on the main stack.

(d) *Unit with multiple stacks or ducts.* When the flue gases from an affected unit utilize two or more ducts feeding into two or more stacks (that may include flue gases from other affected or nonaffected units), or when the flue gases utilize two or more ducts feeding into a single stack and the owner or operator chooses to monitor in the ducts rather than the stack, the owner or operator shall either:

(1) Install, certify, operate, and maintain an SO_2 continuous emission monitoring system and flow monitoring system in each duct feeding into the stack or stacks and determine SO_2 mass emissions from each affected unit as the sum of the SO_2 mass emissions recorded for each duct; or

(2) Install, certify, operate, and maintain an SO_2 continuous emission monitoring system and flow monitoring system in each stack. Determine SO_2 mass emissions from each affected unit as the sum of the SO_2 mass emissions recorded for each stack, except that where another unit also exhausts flue gases to one or more of the stacks, the owner or operator shall also comply with the applicable common stack requirements of this section to determine and record SO_2 mass emissions from the units using that stack.

(e) *Heat input.* The owner or operator of an affected unit using a common stack, bypass stack, or multiple stacks shall account for heat input according to the following:

(1) The owner or operator of an affected unit using a common stack, bypass stack, or multiple stack with a diluent monitor and a flow monitor on each stack may choose to determine the heat input for the affected unit, wherever flow and diluent monitor measurements are used to determine the heat input, using the procedures specified in paragraphs (a) through (d) of this section, except that the terms ''SO_2 mass emissions'' and ''emissions''

are replaced with the term ''heat input'' and the phrase ''SO_2 continuous emission monitoring system and flow monitoring system'' is replaced with the phrase ''a diluent monitor and a flow monitor''.

(2) Notwithstanding paragraph (e)(1) of this section, for any common stack where any unit utilizing the common stack has a NO_X emission limitation pursuant to Section 407(b) of the Act, the owner or operator shall not combine heat input for compliance purposes and shall determine heat input for that unit separately.

(3) Notwithstanding paragraph (e)(1) of this section, during the period prior to January 1, 2000, the owner or operator shall not combine heat input for units utilizing a common stack in order to determine heat input for each unit for purposes of § 75.10.

(4) In the event that an owner or operator of a unit with a bypass stack does not install and certify a diluent monitor and flow monitoring system in a bypass stack, the owner or operator shall determine total heat input to the unit for each unit operating hour during which the bypass stack is used according to the missing data provisions for heat input under § 75.36 or the procedures for calculating heat input from fuel sampling and analysis in section 5.5 of appendix F of this part.

(5) The owner or operator of an affected unit with a diluent monitor and a flow monitor installed on a common stack to determine heat input at the common stack may choose to apportion the heat input from the common stack to each affected unit utilizing the common stack by using either of the following two methods, provided that all of the units utilizing the common stack are combusting fuel with the same F–factor found in section 3 of appendix F of this part. The heat input may be apportioned either by using the ratio of load (in MWe) for each individual unit to the total load for all units utilizing the common stack or by using the ratio of steam flow (in 1000 lb/hr) for each individual unit to the total steam flow for all units utilizing the common stack.

[60 FR 26522, May 17, 1995, as amended at 61 FR 25582, May 22, 1996; 61 FR 59158, Nov. 20, 1996]

§ 75.17 Specific provisions for monitoring emissions from common, bypass, and multiple stacks for NO_x emission rate.

(a) *Unit utilizing common stack with other affected unit(s).* When an affected unit utilizes a common stack with one or more affected units, but no non-affected units, the owner or operator shall either:

(1) Install, certify, operate, and maintain a NO_x continuous emission monitoring system in the duct to the common stack from each affected unit; or

(2) Install, certify, operate, and maintain a NO_x continuous emission monitoring system in the common stack and follow the appropriate procedure in paragraphs (a)(2) (i) through (iii) of this section, depending on whether or not the units are required to comply with a NO_x emission limitation (in lb/mmBtu, annual average basis) pursuant to section 407(b) of the Act (referred to hereafter as ''NO_x emission limitation'').

(i) When each of the affected units has a NO_x emission limitation, the designated representative shall submit a compliance plan to the Administrator that indicates:

(A) Each unit will comply with the most stringent NO_x emission limitation of any unit utilizing the common stack; or

(B) Each unit will comply with the applicable NO_X emission limitation by averaging its emissions with the other unit(s) utilizing the common stack, pursuant to the emissions averaging plan submitted under part 76 of this chapter; or

(C) Each unit's compliance with the applicable NO_X emission limit will be determined by a method satisfactory to the Administrator for apportioning to each of the units the combined NO_X emission rate (in lb/mmBtu) measured in the common stack, as provided in a petition submitted by the designated representative. The Administrator may approve such demonstrated substitute methods for apportioning NO_X emission rate measured in a common stack whenever the demonstration ensures complete and accurate estimation of all emissions regulated under this part.

(ii) When none of the affected units has a NO_x emission limitation, the

owner or operator and the designated representative have no additional obligations pursuant to section 407 of the Act and may record and report a combined NO_x emission rate (in lb/mmBtu) for the affected units utilizing the common stack.

(iii) When at least one of the affected units has a NO_x emission limitation and at least one of the affected units does not have a NO_x emission limitation, the owner or operator shall either:

(A) Install, certify, operate, and maintain NO_x and diluent monitors in the ducts from the affected units; or

(B) Develop, demonstrate, and provide information satisfactory to the Administrator on methods for apportioning the combined NO_x emission rate (in lb/mmBtu) measured in the common stack on each of the units. The Administrator may approve such demonstrated substitute methods for apportioning the combined NO_x emission rate measured in a common stack whenever the demonstration ensures complete and accurate estimation of all emissions regulated under this part.

(b) *Unit utilizing common stack with nonaffected unit(s).* When one or more affected units utilizes a common stack with one or more nonaffected units, the owner or operator shall either:

(1) Install, certify, operate, and maintain a NO_x continuous emission monitoring system in the duct from each affected unit; or

(2) Develop, demonstrate, and provide information satisfactory to the Administrator on methods for apportioning the combined NO_x emission rate (in lb/mmBtu) measured in the common stack for each of the units. The Administrator may approve such demonstrated substitute methods for apportioning the combined NO_x emission rate measured in a common stack whenever the demonstration ensures complete and accurate estimation of all emissions regulated under this part.

(c) *Unit with multiple stacks or bypass stack.* When the flue gases from an affected unit utilize two or more ducts feeding into two or more stacks (that may include flue gases from other affected or nonaffected units), or when flue gases utilize two or more ducts feeding into a single stack and the owner or operator chooses to monitor in the ducts rather than the stack, the owner or operator shall monitor the NO_X emission rate representative of each affected unit. Where another unit also exhausts flue gases to one or more of the stacks where monitoring systems are installed, the owner or operator shall also comply with the applicable common stack monitoring requirements of this section. The owner or operator shall either:

(1) Install, certify, operate, and maintain a NO_X continuous emission monitoring system in each stack or duct and determine the NO_X emission rate for the unit as the Btu-weighted sum of the NO_X emission rates measured in the stacks or ducts using the heat input estimation procedures in appendix F of this part; or

(2) Install, certify, operate, and maintain a NO_X continuous emission monitoring system in one stack or duct from each affected unit and record the monitored value as the NO_X emission rate for the unit. The owner or operator shall account for NO_X emissions from the unit during all times when the unit combusts fuel.

[58 FR 3701, Jan. 11, 1993, as amended at 60 FR 26523, May 17, 1995]

§ 75.18 Specific provisions for monitoring emissions from common and bypass stacks for opacity.

(a) *Unit using common stack.*When an affected unit utilizes a common stack with other affected units or nonaffected units, the owner or operator shall comply with the applicable monitoring provision in this paragraph, as determined by existing Federal, State, or local opacity regulations.

(1) Where another regulation requires the installation of a continuous opacity monitoring system upon each affected unit, the owner or operator shall install, certify, operate, and maintain a continuous opacity monitoring system meeting Performance Specification 1 in appendix B to part 60 of this chapter (referred to hereafter as a ''certified continuous opacity monitoring system'') upon each unit.

(2) Where another regulation does not require the installation of a continuous opacity monitoring system upon each affected unit, and where the affected

source is not subject to any existing Federal, State, or local opacity regulations, the owner or operator shall install, certify, operate, and maintain a certified continuous opacity monitoring system upon each common stack for the combined effluent.

(b) *Unit using bypass stack.* Where any portion of the flue gases from an affected unit can be routed so as to bypass the installed continuous opacity monitoring system, the owner or operator shall install, certify, operate, and maintain a certified continuous opacity monitoring system on each bypass stack flue, duct, or stack gas stream unless either:

(1) An applicable Federal, State, or local opacity regulation or permit exempts the unit from a requirement to install a continuous opacity monitoring system in the bypass stack; or

(2) A continuous opacity monitoring system is already installed and certified at the inlet of the add-on emissions controls.

(3) The owner or operator monitors opacity using Method 9 of appendix A of part 60 of this chapter whenever emissions pass through the bypass stack. Method 9 shall be used in accordance with the applicable State regulations.

[58 FR 3701, Jan. 11, 1993, as amended at 60 FR 26524, May 17, 1995; 60 FR 40296, Aug. 8, 1995; 61 FR 59158, Nov. 20, 1996]

Subpart C—Operation and Maintenance Requirements

§ 75.20 Certification and recertification procedures.

(a) *Initial certification approval process.* The owner or operator shall ensure that each continuous emission or opacity monitoring system required by this part, which includes the automated data acquisition and handling system, and, where applicable, the CO_2 continuous emission monitoring system, meets the initial certification requirements of this section and shall ensure that all applicable certification tests under paragraph (c) of this section are completed by the deadlines specified in § 75.4 and prior to use in the Acid Rain Program. In addition, whenever the owner or operator installs a continuous emission or opacity monitoring system in order to meet the requirements of §§ 75.13 through 75.18 where no continuous emission or opacity monitoring system was previously installed, initial certification is required.

(1) *Notification of initial certification test dates.* The owner or operator or designated representative shall submit a written notice of the dates of initial certification testing at the unit as specified in § 75.60 and § 75.61(a)(1)(i).

(2) *Certification application.* The owner or operator shall apply for certification of each continuous emission or opacity monitoring system used under the Acid Rain Program. The owner or operator shall submit the certification application in accordance with § 75.60 and each complete certification application shall include the information specified in § 75.63.

(3) *Provisional approval of certification applications.* Upon the successful completion of the required certification procedures of this section for each continuous emission or opacity monitoring system or component thereof, each continuous emission or opacity monitoring system or component thereof shall be deemed provisionally certified for use under the Acid Rain Program for a period not to exceed 120 days following receipt by the Administrator of the complete certification application under paragraph (a)(4) of this section; provided that no continuous emission or opacity monitor systems for a combustion source seeking to enter the Opt-in Program in accordance with part 74 of this chapter shall be deemed provisionally certified for use under the Acid Rain Program. Data measured and recorded by a provisionally certified continuous emission or opacity monitoring system or component thereof, in accordance with the requirements of appendix B of this part, will be considered valid quality-assured data (retroactive to the date and time of successful completion of all certification tests), provided that the Administrator does not invalidate the provisional certification by issuing a notice of disapproval within 120 days of receipt of the complete certification application.

(4) *Certification application formal approval process.* The Administrator will issue a written notice of approval or

disapproval of the certification application to the owner or operator within 120 days of receipt of the complete certification application. In the event the Administrator does not issue such a written notice within 120 days of receipt, each continuous emission or opacity monitoring system which meets the performance requirements of this part and is included in the certification application will be deemed certified for use under the Acid Rain Program.

(i) *Approval notice.* If the certification application is complete and shows that each continuous emission or opacity monitoring system meets the performance requirements of this part, then the Administrator will issue a written notice of approval of the certification application within 120 days of receipt.

(ii) *Incomplete application notice.* If the certification application is not complete, then the Administrator will issue a written notice of insufficiency. The 120-day review period shall not begin prior to receipt of a complete application.

(iii) *Disapproval notice.* If the certification application is complete but shows that any continuous emission or opacity monitoring system or component thereof does not meet the performance requirements of this part, the Administrator shall issue a written notice of disapproval of the certification application within 120 days of receipt. By issuing the notice of disapproval, the provisional certification is invalidated by the Administrator, and the data measured and recorded by each uncertified continuous emission or opacity monitoring system or component thereof shall not be considered valid quality-assured data from the date and time of completion of the invalid certification tests until the date and time that the owner or operator completes subsequently approved initial certification tests. The owner or operator shall follow the procedures for loss of certification in paragraph (a)(5) of this section for each continuous emission or opacity monitoring system or component thereof which was disapproved.

(iv) *Audit decertification.* The Administrator may issue a notice of disapproval of the certification status of a continuous emission or opacity monitoring system or component thereof, in accordance with § 75.21.

(5) *Procedures for loss of certification.* When the Administrator issues a notice of disapproval of a certification application or a notice of disapproval of certification status (as specified in paragraph (a)(4) of this section), then:

(i) The owner or operator shall substitute the following values, as applicable, for each hour of unit operation during the period of invalid data specified in paragraph (a)(4)(iii) of this section or in § 75.21: the maximum potential concentration of SO_2 as defined in section 2.1 of appendix A of this part to report SO_2 concentration; the maximum potential NO_X emission rate, as defined in § 72.2 of this chapter to report NO_X emissions, the maximum potential flow rate, as defined in section 2.1 of appendix A of this part to report volumetric flow, or the maximum CO_2 concentration used to determine the maximum potential concentration of SO_2 in section 2.1.1.1 of appendix A of this part to report CO_2 concentration data until such time, date, and hour as the continuous emission monitoring system or component thereof can be adjusted, repaired, or replaced and certification tests successfully completed; and

(ii) The designated representative shall submit a notification of certification retest dates as specified in § 75.61(a)(1)(ii) and a new certification application according to the procedures in paragraph (a)(2) of this section; and

(iii) The owner or operator shall repeat all certification tests or other requirements that were failed by the continuous emission or opacity monitoring system, as indicated in the Administrator's notice of disapproval, no later than 30 unit operating days after the date of issuance of the notice of disapproval.

(b) *Recertification approval process.* Whenever the owner or operator makes a replacement, modification, or change in the certified continuous emission monitoring system or continuous opacity monitoring system (which includes the automated data acquisition and

handling system, and, where applicable, the CO_2 continuous emission monitoring system), that significantly affects the ability of the system to measure or record the SO_2 concentration, volumetric gas flow, SO_2 mass emissions, NO_X emission rate, CO_2 concentration, or opacity, or to meet the requirements of § or appendix B of this part, the owner or operator shall recertify the continuous emission monitoring system, continuous opacity monitoring system, or component thereof according to the procedures in this paragraph. Examples of changes which require recertification include: replacement of the analytical method, including the analyzer; change in location or orientation of the sampling probe or site; rebuilding of the analyzer or all monitoring system equipment; and replacement of an existing continuous emission monitoring system or continuous opacity monitoring system. In addition, if a continuous emission monitoring system is not operating for more than 2 calendar years, then the owner or operator shall recertify the continuous emission monitoring system. The Administrator may determine whether a replacement, modification or change in a monitoring system significantly affects the ability of the monitoring system to measure or record the SO_2 concentration, volumetric gas flow, SO_2 mass emissions, NO_X emission rate, CO_2 concentration, or opacity. Furthermore, whenever the owner or operator makes a replacement, modification, or change to the flue gas handling system or the unit operation that significantly changes the flow or concentration profile of monitored emissions, the owner or operator shall recertify the continuous emission monitoring system or component thereof according to the procedures in this paragraph. The owner or operator shall recertify a continuous opacity monitoring system whenever the monitor path length changes or as required by an applicable State or local regulation or permit. Recertification is not required prior to use of a non-redundant backup continuous emission monitoring system in cases where all of the following conditions have been met: the non-redundant backup continuous emission monitoring system has been certified at the same sampling location within the previous two calendar years; all components of the non-redundant backup continuous emissions monitoring system have previously been certified; and component monitors of the non-redundant backup continuous emission monitoring system pass a linearity check (for pollutant concentration monitors) or a calibration error test (for flow monitors) prior to their use for monitoring of emissions or flow. In addition, changes resulting from routine or normal corrective maintenance and/or quality assurance activities do not require recertification, nor do software modifications in the automated data acquisition and handling system, where the modification is only for the purpose of generating additional or modified reports for the State Implementation Plan, internal company uses, or for reporting requirements under subpart G of this part.

(1) *Tests required.* For recertification testing, the owner or operator shall complete all certification tests in paragraph (c) of this section applicable to the monitoring system, except as approved by the Administrator. Such approval may be obtained by petition under § 75.66 or may be provided in written guidance from the Administrator.

(2) *Notification of recertification test dates.* The owner or operator or designated representative shall submit notice of testing dates for recertification under this paragraph as specified in § 75.61(a)(1)(ii), unless such testing is required as a result of a change in the flue gas handling system, a change in location or orientation of the sampling probe or site, or the planned replacement of a continuous emission or opacity monitoring system or component thereof. In such cases, the owner or operator shall provide notice in accordance with the notice provisions for initial certification testing in § 75.61(a)(1)(i).

(3) *Substitution of missing data.* (i) The owner or operator shall substitute for missing data during the period following the replacement, modification, or change to the monitoring system up to the time of successful completion of all recertification testing according to the

standard missing data procedures in §§ 75.33 through 75.36, and shall use the standard missing data substitution procedures for all missing data periods following the recertification, except as provided below.

(ii) If the replacement, modification, or change is such that the data collected by the prior certified monitoring system are no longer representative, such as after a change to the flue gas handling system or unit operation that requires changing the span value to be consistent with Section 2.1 of appendix A of this part, the owner or operator must also substitute the appropriate one of the following values: for a change that results in a significantly higher concentration or flow rate, substitute maximum potential values according to the procedures in paragraph (a)(5) of this section during the period following the replacement, modification, or change up to the time of the successful completion of all recertification testing; or for a change that results in a significantly lower concentration or flow rate, substitute data using the standard missing data procedures during the period following the replacement, modification, or change up to the time of the successful completion of all recertification testing. The owner or operator shall then use the initial missing data procedures in § 75.31 following provisional certification, unless otherwise provided by § 75.34 for units with add-on emission controls.

(4) *Recertification application*. The designated representative shall apply for recertification of a continuous emission or opacity monitoring system used under the Acid Rain Program according to the procedures in paragraph (a)(2) of this section. Each complete recertification application shall include the information specified in § 75.63 of this part.

(5) *Approval/disapproval of request for recertification*. The procedures for provisional certification in paragraph (a)(3) of this section shall apply. The Administrator will issue a written notice of approval or disapproval according to the procedures in paragraph (a)(4) of this section, except that the period for the Administrator's review provided under paragraph (a)(4) of this section shall not exceed 60 days following receipt of the complete recertification application by the Administrator. The missing data substitution procedures under paragraph (b)(3) of this section shall apply in the event of a loss of recertification.

(c) *Certification procedures.* Prior to the deadline in § 75.4 of this part, the owner or operator shall conduct certification tests and in accordance with § 75.63, the designated representative shall submit an application to demonstrate that the continuous emission or opacity monitoring system and components thereof meet the specifications in appendix A to this part. The owner or operator shall compare reference method values with output from the automated data acquisition and handling system that is part of the continuous emission monitoring system being tested. Except as specified in paragraphs (b)(1), (d) and (e) of this section, the owner or operator shall perform the following tests for initial certification or recertification of continuous emission or opacity monitoring systems or components according to the requirements of appendix A of this part:

(1) For each SO_2 pollutant concentration monitor and NO_x continuous emission monitoring system:

(i) A 7-day calibration error test, where, for the NO_x continuous emission monitoring system, this test is performed separately on the NO_x pollutant concentration monitor and the diluent gas monitor;

(ii) A linearity check, where, for the NO_x continuous emission monitoring system, this check is performed separately on the NO_x pollutant concentration monitor and the diluent gas monitor;

(iii) A relative accuracy test audit;

(iv) A bias test; and

(v) A cycle time test.

(v) A cycle time/response time test.

(2) For each flow monitor:

(i) A 7-day calibration error test;

(ii) Relative accuracy test audits at three flue gas velocities; and

(iii) A bias test (at normal operating load).

(3) The relative accuracy test audits for the SO_2 pollution concentration

monitor and the flow monitor shall be performed contemporaneously.

(4) The certification test data from an O_2 or a CO_2 diluent gas monitor certified for use in a NO_X continuous emission monitoring system may be submitted to meet the requirements of § 75.20(c)(5).

(5) For each CO_2 pollutant concentration monitor or O_2 monitor which is part of a CO_2 continuous emission monitoring system or is used to monitor heat input and for each SO_2-diluent continuous emission monitoring system:

(i) A 7-day calibration error test, where, for the SO_2-diluent system, this test is performed separately on each component monitor;

(ii) A linearity check, where, for the SO_2 diluent system, this check is performed separately on each component monitor;

(iii) A relatively accuracy test audit; and

(iv) A cycle-time test.

(6) The owner or operator shall ensure that certification or recertification of a continuous opacity monitor for use under the Acid Rain Program is conducted according to one of the following procedures:

(i) Performance of the tests for certification or recertification, according to the requirements of Performance Specification 1 in appendix B to part 60 of this chapter.

(ii) A continuous opacity monitoring system tested and certified previously under State or other Federal requirements to meet the requirements of Performance Specification 1 shall be deemed certified for the purposes of this part.

(7) For the automated data acquisition and handling system, tests designed to verify:

(i) Proper computation of hourly averages for pollutant concentrations, flow rate, pollutant emission rates, and pollutant mass emissions; and

(ii) Proper computation and application of the missing data substitution procedures in subpart D of this part and the bias adjustment factors in Section 7 of appendix A to this part.

(8) The owner or operator shall provide, or cause to be provided, adequate facilities for certification or recertification testing that include:

(i) Sampling ports adequate for test methods applicable to such facility, such that:

(A) Volumetric flow rate, pollutant concentration, and pollutant emission rates can be accurately determined by applicable test methods and procedures; and

(B) A stack or duct free of cyclonic flow during performance tests is available, as demonstrated by applicable test methods and procedures.

(ii) Basic facilities (e.g., electricity) for sampling and testing equipment.

(d) *Certification/recertification procedures for optional backup continuous emission monitoring systems*—(1) *Redundant backups.* The owner or operator of an optional redundant backup continuous emission monitoring system shall comply with all the requirements for initial certification and recertification according to the procedures specified in paragraphs (a), (b), and (c) of this section. The owner or operator shall operate the redundant backup continuous emission monitoring system during all periods of unit operation, except for periods of calibration, quality assurance, maintenance, or repair. The owner or operator shall perform upon the redundant backup continuous emission monitoring system all quality assurance and quality control procedures specified in appendix B of this part.

(2) *Non-redundant backups.* The owner or operator of an optional non-redundant backup continuous emission monitoring system shall comply with all the requirements for initial certification and recertification according to the procedures specified in paragraphs (a), (b) and (c) of this section for each non-redundant backup continuous emission monitoring system, except that: the owner or operator of a non-redundant backup continuous emission monitoring system may omit the 7-day calibration error test for certification or recertification of an SO_2 pollutant concentration monitor, flow monitor, NO_X pollutant concentration monitor, or diluent gas monitor, provided the non-redundant backup system is not used for reporting on any affected unit for more than 720 hours in any calendar

year. In addition, the owner or operator shall ensure that the certified non-redundant backup continuous emission monitoring system passes a linearity check (for pollutant concentration monitors) or a calibration error test (for flow monitors) prior to each use for recording and reporting emissions and complies with the daily and quarterly quality assurance and quality control requirements in appendix B of this part for each day and quarter that the non-redundant backup monitoring system is used to report data. If the owner or operator does not perform semi-annual or annual relative accuracy test audits upon the non-redundant backup continuous emission monitoring system, then the owner or operator shall recertify the non-redundant continuous emission monitoring system once every two calendar years, performing all certification tests applicable under this paragraph. However, if a non-redundant backup system is used for reporting data from any affected unit or common stack for more than 720 hours in any one calendar year, then reported data after the first 720 hours is not valid, quality-assured data unless the owner or operator has ensured that the non-redundant backup monitoring system has also passed the 7-day calibration error test, before data is recorded for any period in excess of 720 hours for that calendar year for that monitoring system.

(3) *Reference method backups.* A monitoring system that is operated as a reference method backup system pursuant to the reference method requirements of Methods 2, 6C, 7E, or 3A in appendix A of part 60 of this chapter need not perform and pass the certification tests required by paragraph (c) of this section prior to its use pursuant to this paragraph.

(e) *Certification/recertification procedures for either peaking unit or by-pass stack/duct continuous emission monitoring systems.* The owner or operator of either a peaking unit or by-pass stack/duct continuous emission monitoring system shall comply with all the requirements for certification or recertification according to the procedures specified in paragraphs (a), (b), and (c) of this section, except as follows: the owner or operator need only perform one nine-run relative accuracy test audit for certification or recertification of a flow monitor installed on the by-pass stack/duct or on the stack/duct used only by affected peaking unit(s). The relative accuracy test audit shall be performed during normal operation of the peaking unit(s) or the by-pass stack/duct.

(f) *Certification/recertification procedures for alternative monitoring systems.* The designated representative representing the owner or operator of each alternative monitoring system approved by the Administrator as equivalent to or better than a continuous emission monitoring system according to the criteria in subpart E of this part shall apply for certification to the Administrator prior to use of the system under the Acid Rain Program, and shall apply for recertification to the Administrator following a replacement, modification, or change according to the procedures in paragraph (c) of this section. The owner or operator of an alternative monitoring system shall comply with the notification and application requirements for certification or recertification according to the procedures specified in paragraphs (a) and (b) of this section.

(1) The Administrator will publish each request for initial certification of an alternative monitoring system in the FEDERAL REGISTER and, following a public comment period of 60 days, will issue a notice of approval or disapproval.

(2) No alternative monitoring system shall be authorized by the Administrator in a permit issued pursuant to part 72 of this chapter unless approved by the Administrator in accordance with this part.

(g) *Certification procedures for excepted monitoring systems under appendices D and E.* The owner or operator of a gas-fired unit, oil-fired unit, or diesel-fired unit using the optional protocol under appendix D or E of this part shall ensure that an excepted monitoring system under appendix D or E of this part meets the applicable general operating requirements of § 75.10, the applicable requirements of appendices D and E to this part, and the certification requirements of this paragraph.

(1) *Certification testing.* The owner or operator shall use the following procedures for certification of an excepted monitoring system under appendix D or E of this part.

(i) When the optional SO_2 mass emissions estimation procedure in appendix D of this part or the optional NO_X emissions estimation protocol in appendix E of this part is used, the owner or operator shall provide data from a calibration test for each fuel flowmeter according to the appropriate calibration procedures using one of the following standard methods: ASME MFC–3M–1989 with September 1990 Errata, ''Measurement of Fluid Flow in Pipes Using Orifice, Nozzle, and Venturi'', ASME MFC–4M–1986 (Reaffirmed 1990) ''Measurement of Gas Flow by Turbine Meters'', ASME MFC–5M–1985, ''Measurement of Liquid Flow in Closed Conduits Using Transit–Time Ultrasonic Flowmeters'', ASME MFC–6M–1987 with June 1987 Errata, ''Measurement of Fluid Flow in Pipes Using Vortex Flow Meters'', ASME MFC–7M–1987 (Reaffirmed 1992), ''Measurement of Gas Flow by Means of Critical Flow Venturi Nozzles'', ASME MFC–9M–1988 with December 1989 Errata, ''Measurement of Liquid Flow in Closed Conduits by Weighing Method'', ISO 8316: 1987(E) ''Measurement of Liquid Flow in Closed Conduits—Method by Collection of the Liquid in a Volumetric Tank'', Section 8, Calibration from American Gas Association Transmission Measurement Committee Report No. 7: Measurement of Gas by Turbine Meters (1985 Edition) or American Gas Association Report No. 3: Orifice Metering of Natural Gas and Other Related Hydrocarbon Fluids Part 1: General Equations and Uncertainty Guidelines (October 1990 Edition), Part 2: Specification and Installation Requirements (February 1991 Edition) and Part 3: Natural Gas Applications (August 1992 Edition), excluding the modified calculation procedures of Part 3, as required by appendices D and E of this part (all methods incorporated by reference under § 75.6). The Administrator may also approve other procedures that use equipment traceable to National Institute of Standards of Technology (NIST) standards. The designated representative shall document the procedure and the equipment used in the monitoring plan for the unit and in a petition submitted in accordance with § 75.66(c).

(ii) For the automated data acquisition and handling system used under either the optional SO_2 mass emissions estimation procedure in appendix D of this part or the optional NO_X emissions estimation protocol in appendix E of this part, the owner or operator shall perform tests designed to verify:

(A) The proper computation of hourly averages for pollutant concentrations, fuel flow rates, emission rates, heat input, and pollutant mass emissions; and

(B) Proper computation and application of the missing data substitution procedures in appendix D or E of this part.

(iii) When the optional NO_X emissions protocol in appendix E is used, the owner or operator shall complete all initial performance testing under section 2.1 of appendix E.

(2) *Certification testing notification.* The designated representative shall provide initial certification testing notification and periodic retesting notification for an excepted monitoring system under appendix E of this part as specified in § 75.61. The designated representative shall submit recertification testing notification as specified in § 75.61 for quality assurance/quality control-related NO_X emission rate testing under section 2.3 of appendix E of this part for an excepted monitoring system under appendix E of this part. Certification testing notification or periodic retesting notification is not required for testing of a fuel flowmeter or testing for an excepted monitoring system under appendix D of this part.

(3) *Monitoring plan.* The designated representative shall submit an initial monitoring plan in accordance with § 75.62(a).

(4) *Certification application.* The designated representative shall submit a certification application in accordance with §§ 75.60 and 75.63.

(5) *Provisional approval of certification applications.* Upon the successful completion of the required certification procedures for each excepted monitoring system under appendix D or E of this part, each excepted monitoring

system under appendix D or E of this part shall be deemed provisionally certified for use under the Acid Rain Program during the period for the Administrator's review. The provisions for the certification application formal approval process in paragraph (a)(4) of this section shall apply. Data measured and recorded by a provisionally certified excepted monitoring system under appendix D or E of this part, will be considered quality-assured data from the date and time of completion of the final certification test, provided that the Administrator does not revoke the provisional certification by issuing a notice of disapproval within 120 days of receipt of the complete certification application in accordance with the provisions in paragraph (a)(4) of this section.

[58 FR 3701, Jan. 11, 1993, as amended at 60 FR 26524, May 17, 1995; 60 FR 40296, Aug. 8, 1995; 61 FR 59158, Nov. 20, 1996]

§75.21 Quality assurance and quality control requirements.

(a) *Continuous emission monitoring systems.* The owner or operator of an affected unit shall operate, calibrate and maintain each continuous emission monitoring system used to report emission data under the Acid Rain Program as follows:

(1) The owner or operator shall operate, calibrate and maintain each primary and redundant backup continuous emission monitoring system according to the quality assurance and quality control procedures in appendix B of this part.

(2) The owner or operator shall ensure that each non-redundant backup continuous emission monitoring system complies with the daily and quarterly quality assurance and quality control procedures in appendix B of this part for each day and quarter that the system is used to report data.

(3) The owner or operator shall perform quality assurance upon a reference method backup monitoring system according to the requirements of Method 2, 6C, 7E, or 3A in appendix A of part 60 of this chapter (supplemented, as necessary, by guidance from the Administrator), instead of the procedures specified in appendix B of this part.

(4) When a unit combusts only natural gas or gaseous fuel with a sulfur content no greater than natural gas and SO_2 emissions are determined in accordance with §75.11(e)(1) or (e)(2), the owner or operator of a unit with an SO_2 continuous emission monitoring system is not required to perform the daily or quarterly assessments of the SO_2 monitoring system under appendix B of this part on any day or in any calendar quarter in which only natural gas (or gaseous fuel with a sulfur content no greater than natural gas) is combusted in the unit. Notwithstanding, the results of any daily calibration error test and linearity test of the SO_2 monitoring system performed while the unit is combusting only natural gas (or gaseous fuel with a sulfur content no greater than natural gas) shall be considered valid. If any such test is failed, the SO_2 monitoring system shall be considered to be out-of-control until a subsequent test of the same type has been successfully completed.

(5) For a unit with an SO_2 continuous monitoring system, in which natural gas (or gaseous fuel with a sulfur content no greater than natural gas) is sometimes burned as a primary and/or backup fuel, and in which higher-sulfur fuel(s) such as oil or coal are, at other times, burned as primary or backup fuel(s), the owner or operator shall perform the relative accuracy test audits of the SO_2 monitoring system (as required by section 6.5 in appendix A of this part and section 2.3.1 in appendix B of this part) only when the higher-sulfur fuel is combusted in the unit, and shall not perform SO_2 relative accuracy test audits when gaseous fuel is the only fuel being combusted.

(6) If a unit with an SO_2 monitoring system burns only fuel(s) with a sulfur content no greater than that of natural gas and never combusts other fuel(s) with a sulfur content greater than natural gas, the SO_2 monitoring system is exempted from the relative accuracy test audit requirements in appendices A and B of this part.

(7) In determining the deadline for the next semiannual or annual relative accuracy test audit of an SO_2 monitoring system, any calendar quarter during which a unit combusts only fuel(s) with a sulfur content no greater than

natural gas shall be excluded in determining the calendar quarter, bypass operating quarter, or unit operating quarter when the next relative accuracy test audit must be performed for the SO_2 monitoring system. If, however, as a result of such exclusion of calendar quarters, eight calendar quarters elapse after a relative accuracy test audit, without a subsequent relative accuracy test audit of an SO_2 monitoring system having been performed, the owner or operator shall ensure that a relative accuracy test audit is performed in the next calendar quarter in which a fuel with a sulfur content greater than natural gas is burned in the unit.

(8) The owner or operator who, in accordance with § 75.11(e)(1), uses a certified flow monitor and a certified diluent monitor and Equation F–23 in appendix F of this part to calculate SO_2 emissions during hours in which a unit combusts only pipeline natural gas, shall meet all quality control and quality assurance requirements in appendix B of this part for the flow monitor and the diluent monitor.

(b) *Continuous opacity monitoring systems.* The owner or operator of an affected unit shall operate, calibrate, and maintain each continuous opacity monitoring system used under the Acid Rain Program according to the procedures specified for State Implementation Plans, pursuant to part 51, appendix M of this chapter.

(c) *Calibration gases.* The owner or operator shall ensure that all calibration gases used to quality assure the operation of the instrumentation required by this part shall meet the definition in § 72.2 of this chapter.

(d) *Notification for periodic relative accuracy test audits.* The owner or operator or the designated representative shall submit a written notice of the dates of relative accuracy testing as specified in § 75.61.

(e) *Consequences of audits.* The owner or operator shall invalidate data from a continuous emission monitoring system or continuous opacity monitoring system upon failure of an audit under paragraph (a)(1)(iv) of § 75.20, under appendix B of this part, or any other audit, beginning with the unit operating hour of completion of a failed audit as determined by the Administrator. The owner or operator shall not use invalidated data for reporting emissions or heat input, nor for calculations of monitor data availability.

(1) *Audit decertification.* Whenever both: an audit (including audits required under appendix B of this part) of a continuous emission or opacity monitoring system or component thereof, including the data acquisition and handling system, and a review of the initial certification application or recertification application, reveal that any continuous emission or opacity monitoring system or component should not have been certified because it did not meet a particular performance specification or other requirement of this part both at the time of the certification application submission and at the time of the audit, the Administrator will issue a notice of disapproval of the certification status of such system or component. By issuing the notice of disapproval, the certification status is revoked, prospectively, by the Administrator. The data measured and recorded by each continuous emission or opacity monitoring system shall not be considered valid quality-assured data from the date of issuance of the notification of the revoked certification status until the date and time that the owner or operator completes subsequently approved certification tests. The owner or operator shall follow the procedures for loss of certification in § 75.20(a)(5) for initial certification or § 75.20(b)(3) for recertification to replace, prospectively, all of the invalid, non-quality-assured data for each disapproved continuous emission or opacity monitoring system.

(2) *Out-of-control period.* Whenever a continuous emission monitoring system or continuous opacity monitoring system fails a periodic quality assurance audit, an audit under § 75.20(a)(1)(iv), a field audit from EPA personnel or other audit, the system is out-of-control. The owner or operator shall follow the procedures for out-of-control periods in § 75.24.

[58 FR 3701, Jan. 11, 1993, as amended at 60 FR 26527, 26566, May 17, 1995; 61 FR 25582, May 22, 1996; 61 FR 59159, Nov. 20, 1996]

§75.22 Reference test methods.

(a) The owner or operator shall use the following methods included in appendix A to part 60 of this chapter to conduct monitoring system tests for certification or recertification of continuous emission monitoring systems and excepted monitoring systems under appendix E of this part and quality assurance and quality control procedures.

(1) Methods 1 or 1A are the reference methods for selection of sampling site and sample traverses.

(2) Methods 2, 2A, 2C, or 2D are the reference methods for determination of volumetric flow.

(3) Methods 3, 3A, or 3B are the reference methods for the determination of the dry molecular weight O_2 and CO_2 concentrations in the emissions.

(4) Method 4 is the reference method for the determination of moisture in the stack.

(5) Methods 6, 6A, 6B or 6C, and 7, 7A, 7C, 7D or 7E, as applicable, are the reference methods for determining SO_2 and NO_X pollutant concentrations. (Methods 6A and 6B may also be used to determine SO_2 emission rate in lb/mmBtu. Methods 7, 7A, 7C, 7D, or 7E must be used to measure total NO_X emissions, both NO and NO_2, for purposes of this part. The owner or operator shall not use the exception in section 5.1.2 of Method 7E.)

(6) Method 20 is the reference method for determining NO_X and diluent emissions from stationary gas turbines for testing under appendix E of this part.

(b) The owner or operator may use the following methods in Appendix A of part 60 of this chapter as a reference method backup monitoring system to provide quality-assured monitor data:

(1) Method 3A for determining O_2 or CO_2 concentration;

(2) Method 6C for determining SO_2 concentration;

(3) Method 7E for determining total NO_X concentration (both NO and NO_2); and

(4) Method 2 for determining volumetric flow. The sample point(s) for reference methods shall be located according to the provisions of section 6.5.5 of appendix A of this part.

(c) (1) Performance tests shall be conducted and data reduced in accordance with the test methods and procedures of this part unless the Administrator:

(i) Specifies or approves, in specific cases, the use of a reference method with minor changes in methodology;

(ii) Approves the use of an equivalent method; or

(iii) Approves shorter sampling times and smaller sample volumes when necessitated by process variables or other factors.

(2) Nothing in this paragraph shall be construed to abrogate the Administrator's authority to require testing under Section 114 of the Act.

[58 FR 3701, Jan. 11, 1993, as amended at 60 FR 26528, May 17, 1995]

§75.23 Alternatives to standards incorporated by reference.

(a) The designated representative of a unit may petition the Administrator for an alternative to any standard incorporated by reference and prescribed in this part in accordance with §75.66(c).

(b) [Reserved]

[60 FR 26528, May 17, 1995]

§75.24 Out-of-control periods.

(a) If an out-of-control period occurs to a monitor or continuous emission monitoring system, the owner or operator shall take corrective action and repeat the tests applicable to the ''out-of-control parameter'' as described in appendix B of this part.

(1) For daily calibration error tests, an out-of-control period occurs when the calibration error of a pollutant concentration monitor exceeds 5.0 percent based upon the span value, the calibration error of a diluent gas monitor exceeds 1.0 percent O_2 or CO_2, or the calibration error of a flow monitor exceeds 6.0 percent based upon the span value, which is twice the applicable specification in Appendix A to this part.

(2) For quarterly linearity checks, an out-of-control period occurs when the error in linearity at any of three gas concentrations (low, mid-range, and high) exceeds the applicable specification in appendix A to this part.

(3) For relative accuracy test audits, an out-of-control period occurs when

the relative accuracy exceeds the applicable specification in Appendix A to this part.

(b) When a monitor or continuous emission monitoring system is out-of-control, any data recorded by the monitor or monitoring system are not quality-assured and shall not be used in calculating monitor data availabilities pursuant to § 75.32 of this part.

(c) When a monitor or continuous emission monitoring system is out-of-control, the owner or operator shall take one of the following actions until the monitor or monitoring system has successfully met the relevant criteria in appendices A and B of this part as demonstrated by subsequent tests:

(1) Apply the procedures for missing data substitution to emissions from affected unit(s); or

(2) Use a certified backup or certified portable monitor or monitoring system or a reference method for measuring and recording emissions from the affected unit(s); or

(3) Adjust the gas discharge paths from the affected unit(s) with emissions normally observed by the out-of-control monitor or monitoring system so that all exhaust gases are monitored by a certified monitor or monitoring system meeting the requirements of appendices A and B of this part.

(d) When the bias test indicates that an SO_2 monitor, volumetric flow monitor, or NO_X continuous emission monitoring system is biased low (i.e., the arithmetic mean of the differences between the reference method value and the monitor or monitoring system measurements in a relative accuracy test audit exceed the bias statistic in section 7 of appendix A to this part), the owner or operator shall adjust the monitor or continuous emission monitoring system to eliminate the cause of bias such that it passes the bias test or calculate and use the bias adjustment factor as specified in section 2.3.3 of appendix B to this part and in accordance with § 75.7.

(e) The owner or operator shall determine if a continuous opacity monitoring system is out-of-control and shall take appropriate corrective actions according to the procedures specified for State Implementation Plans, pursuant to appendix M of part 51 of this chapter. The owner or operator shall comply with the monitor data availability requirements of the State. If the State has no monitor data availability requirements for continuous opacity monitoring systems, then the owner or operator shall comply with the monitor data availability requirements as stated in the data capture provisions of appendix M, part 51 of this chapter.

[58 FR 3701, Jan. 11, 1993, as amended at 60 FR 26528, May 17, 1995]

Subpart D—Missing Data Substitution Procedures

§ 75.30 General provisions.

(a) Except as provided in § 75.34, the owner or operator shall provide substitute data for each affected unit using a continuous emission monitoring system according to the missing data procedures in this subpart whenever the unit combusts any fuel and:

(1) A valid, quality-assured hour of SO_2 concentration data (in ppm) has not been measured and recorded for an affected unit by a certified SO_2 pollutant concentration monitor, or by an approved alternative monitoring method under subpart E of this part, except as provided in paragraph (d) of this section; or

(2) A valid, quality-assured hour of flow data (in scfh) has not been measured and recorded for an affected unit from a certified flow monitor, or by an approved alternative monitoring system under subpart E of this part; or

(3) A valid, quality-assured hour of NO_X emission rate data (in lb/mmBtu) has not been measured and recorded for an affected unit by a certified NO_X continuous emission monitoring system, or by an approved alternative monitoring system under subpart E of this part; or

(4) A valid, quality-assured hour of CO_2 concentration data (in percent CO_2, or percent O_2 converted to percent CO_2 using the procedures in appendix F of this part) has not been measured and recorded for an affected unit by a certified CO_2 continuous emission monitoring system, or by an approved alternative monitoring method under subpart E of this part.

(b) However, the owner or operator shall have no need to provide substitute data according to the missing data procedures in this subpart if the owner or operator uses SO_2 or CO_2 (or O_2) concentration, flow, or NO_X emission rate data recorded from either a certified redundant or non-redundant backup continuous emission monitor or a backup reference method monitoring system when the certified primary monitor is not operating or out-of-control. A redundant or non-redundant backup continuous emission monitoring system must have been certified according to the procedures in § 75.20 prior to the missing data period. Non-redundant backup continuous emission monitoring system must pass a linearity check (for pollutant concentration monitors) or a calibration error test (for flow monitors) prior to each period of use of the certified backup monitor for recording and reporting emissions. Use of a certified backup monitoring system or backup reference method monitoring system is optional and at the discretion of the owner or operator.

(c) When the certified primary monitor is not operating or out-of-control, then data recorded for an affected unit from a certified backup continuous emission monitor or backup reference method monitoring system are used, as if such data were from the certified primary monitor, to calculate monitor data availability in § 75.32, and to provide the quality-assured data used in the missing data procedures in §§ 75.31 and 75.33, such as the ''hour after'' value.

(d) The owner or operator shall comply with the applicable provisions of this paragraph during hours in which a unit with an SO_2 continuous emission monitoring system combusts only natural gas or gaseous fuel with a sulfur content no greater than natural gas.

(1) Whenever a unit with an SO_2 continuous emission monitoring system combusts only pipeline natural gas and the owner or operator is using the procedures in section 7 of appendix F of this part to determine SO_2 mass emissions pursuant to § 75.11(e)(1), the owner or operator shall, for the purposes of reporting heat input data under § 75.54(b)(5) and for the calculation of SO_2 mass emissions using Equation F–23 in section 7 of appendix F of this part, substitute for missing data from a flow monitoring system, CO_2 diluent monitor or O_2 diluent monitor using the missing data substitution procedures in § 75.36.

(2) Whenever a unit with an SO_2 continuous emission monitoring system combusts gaseous fuel with a sulfur content no greater than natural gas (i.e., ≤ 20 gr/100 scf) and the owner or operator uses the gas sampling and analysis and fuel flow procedures in appendix D of this part, to determine SO_2 mass emissions pursuant to § 75.11(e)(2), the owner or operator shall substitute for missing sulfur content, gross calorific value and fuel flow meter data using the missing data procedures in appendix D of this part and shall also, for the purposes of reporting heat input data under § 75.54(b)(5), substitute for missing data from a flow monitoring system, CO_2 diluent monitor or O_2 diluent monitor using the missing data substitution procedures in § 75.36.

(3) The owner or operator of a unit with an SO_2 monitoring system shall not include hours when the unit combusts only natural gas (or a gaseous fuel with sulfur content no greater than that of natural gas) in the SO_2 data availability calculations in § 75.32, or in the calculations of substitute SO_2 data using the procedures of either §§ 75.31 or 75.33, when SO_2 emissions are determined in accordance with §§ 75.11 (e)(1) or (e)(2). For the purpose of the missing data and availability procedures for SO_2 pollutant concentration monitors in §§ 75.31 through 75.33 only, all hours during which the unit combusts only natural gas, or a gaseous fuel with a sulfur content no greater than natural gas, shall be excluded from the definition of ''monitor operating hour,'' ''quality-assured monitor operating hour,'' ''unit operating hour,'' and ''unit operating day'', when SO_2 emissions are determined in accordance with §§ 75.11 (e)(1) or (e)(2).

(4) During all hours in which a unit with an SO_2 continuous emission monitoring system combusts only natural gas (or gaseous fuel with a sulfur content no greater than natural gas) and the owner or operator uses the SO_2 monitoring system to determine SO_2 mass emissions pursuant to § 75.11(e)(3),

the owner or operator shall determine the percent monitor data availability for SO_2 in accordance with § 75.32 and shall use the standard SO_2 missing data procedures of § 75.33.

[60 FR 26528, 26566, May 17, 1995, as amended at 61 FR 59160, Nov. 20, 1996]

§ 75.31 Initial missing data procedures.

(a) During the first 720 quality-assured monitor operating hours following initial certification (i.e., following the date and time of completion of successful certification tests), of the SO_2 and CO_2 (or O_2) pollutant concentration monitor and during the first 2,160 quality-assured monitor operating hours following initial certification of the flow monitor and NO_X continuous emission monitoring system(s), the owner or operator shall provide substitute data required under this subpart according to the procedures in paragraphs (b) and (c) of this section. The owner or operator of a unit shall use these procedures for no longer than three years (26,280 clock hours) following initial certification.

(b) *SO_2* or CO_2 (or O_2) concentration data. For each hour of missing SO_2 or CO_2 concentration data (including CO_2 data converted from O_2 data using the procedures in appendix F of this part) or O_2 concentration data used to calculate heat input, the owner or operator shall calculate the substitute data as follows:

(1) Whenever prior quality-assured data exist, the owner or operator shall substitute, by means of the data acquisition and handling system, the average of the hourly SO_2 or CO_2 (or O_2) concentrations recorded for an affected unit by a certified monitor for the unit operating hour immediately before and the unit operating hour immediately after the missing data period for each hour of missing data.

(2) Whenever no prior quality-assured SO_2 or CO_2 (or O_2) concentration data exist, the owner or operator shall substitute the maximum potential concentration for SO_2 or CO_2 (or minimum O_2 concentration, for determination of heat input), as specified in section 2.1 of appendix A of this part, for each hour of missing data.

(c) *Volumetric flow and NO_x emission rate data.* For each hour of missing volumetric flow or NO_x emission rate data;

(1) Whenever prior quality-assured data exist in the load range corresponding to the operating load at the time the missing data period occurred, the owner or operator shall substitute, by means of the automated data acquisition and handling system, the average hourly flow rate (or NO_x emission rate) recorded for the affected unit by a certified flow monitor (or a certified NO_x continuous emission monitoring system). The flow rate (or NO_x emission rate) shall be calculated from the corresponding load range as determined using the procedure in appendix C of this part.

(2) Whenever no prior quality-assured flow or NO_x emission rate data exist for the corresponding load range, the owner or operator shall substitute the average hourly flow rate or the average hourly NO_x emission rate at the next higher level load range for which quality-assured data is available, for each hour of missing data.

(3) Whenever no prior quality-assured flow or NO_X emission rate data exist for the corresponding load range, or any higher load range, the owner or operator shall calculate and substitute the maximum potential flow rate or shall substitute the maximum potential NO_X emission rate, as specified in § 72.2 of this chapter and section 2.1 of appendix A, for each hour of missing data.

[58 FR 3701, Jan. 11, 1993, as amended at 60 FR 26529, May 17, 1995]

§ 75.32 Determination of monitor data availability for standard missing data procedures.

(a) Following initial certification, upon completion of the first 720 quality-assured monitor operating hours of the SO_2 or CO_2 (or O_2) pollutant concentration monitor or the first 2,160 quality-assured monitor operating hours of the flow monitor or NO_X continuous emission monitoring system, the owner or operator shall calculate and record, by means of the automated data acquisition and handling system, the percent monitor data availability for the SO_2 and CO_2 (or O_2) pollutant

concentration monitor, the flow monitor, the NO_X continuous emission monitoring system as follows:

(1) Prior to completion of 8,760 unit operating hours following initial certification, the owner or operator shall, for the purpose of applying the standard missing data procedures of § 75.33, use Equation 8 to calculate, hourly, percent monitor data availability.

$$\text{Percent monitor data availability} = \frac{\text{Total unit operating hours for which quality-assured data were recorded since certification}}{\text{Total unit operating hours since certification}} \times 100 \qquad \text{(Eq. 8)}$$

(2) Upon completion of 8,760 unit operating hours following initial certification (or, for a unit with less than 8,760 unit operating hours three years (26,280 clock hours) after initial certification, upon completion of three years (26,280 clock hours) following initial certification) and thereafter, the owner or operator shall, for the purpose of applying the standard missing data procedures of § 75.33, use Equation 9 to calculate, hourly, percent monitor data availability.

$$\text{Percent monitor data availability} = \frac{\text{Total unit operating hours for which quality-assured data were recorded during previous 8,760 unit operating hours}}{8{,}760} \times 100 \qquad \text{(Eq. 9)}$$

(3) The owner or operator shall include all unit operating hours, and all monitor operating hours for which quality-assured data were recorded by a certified primary monitor; a certified redundant or non-redundant backup monitor or a reference method for that unit; or by an approved alternative monitoring system under subpart E of this part when calculating percent monitor data availability using Equation 8 or 9. No hours from more than three years (26,280 clock hours) earlier shall be used in Equation 9. For a unit that has accumulated less than 8,760 unit operating hours in the previous three years (26,280 clock hours), replace the words ''during previous 8,760 unit operating hours'' in Equation 9 with ''in the previous three years'' and replace ''8,760'' with ''total unit operating hours in the previous three years.'' The owner or operator of a unit with an SO_2 monitoring system shall, when SO_2 emissions are determined in accordance with § 75.11(e)(1) or (e)(2), exclude hours in which a unit combusts only natural gas (or gaseous fuel with a sulfur content no greater than natural gas) from calculations of percent monitor data availability for SO_2 pollutant concentration monitors, as provided in § 75.30(d).

(b) The monitor data availability need not be calculated during the missing data period. The owner or operator shall record the percent monitor data availability for the last hour of each missing data period as the monitor availability used to implement the missing data substitution procedures.

[58 FR 3701, Jan. 11, 1993, as amended at 60 FR 26529, 26567, May 17, 1995; 61 FR 59160, Nov. 20, 1996]

§ 75.33 Standard missing data procedures.

(a) Following initial certification and upon completion of the first 720 quality-assured monitor operating hours of the SO_2 pollutant concentration monitor or the first 2,160 quality-assured

monitor operating hours of the flow monitor or NO_x continuous emission monitoring system, the owner or operator shall provide substitute data required under this subpart according to the procedures in paragraphs (b) and (c) of this section and depicted in Table 1 (SO_x) and Table 2 (NO_x, flow). The owner or operator of a unit shall substitute for missing data using only quality-assured monitor operating hours of data from the three years (26,280 clock hours) prior to the date and time of the missing data period.

TABLE 1.—MISSING DATA PROCEDURE FOR SO_2 CEMS

Trigger conditions		Calculation routines	
Availability (percent)	Duration (N) of outage (hours)	Method	Lookback period
95 or more	N≤24	Average	HB/HA.
	N>24	Max. of average	HB/HA.
		Max. of 90th percentile	720 operating hours*.
90 or more, but below 95	N≤8	Average	HB/HA.
	N>8	Max. of average	HB/HA.
		Max. of 95th percentile	720 operating hours*.
Below 90	N >0	Maximum value[1]	720 operating hours*.

HB/HA=hour before and hour after the outage.
*=Quality-assured, monitor operating hours.
[1] Where unit with add-on emission controls can demonstrate that the controls are operating properly, as provided in § 75.34, the unit may, upon approval, use the maximum controlled emission rate from the previous 720 operating hours.

TABLE 2.—MISSING DATA PROCEDURE FOR NO_x AND FLOW CEMS

Trigger conditions		Calculation routines		
Availability (percent)	Duration (N) of outage (hours)	Method	Lookback period	Load ranges
95 or more	N ≤ 24	Average	2160 operating hours*	Yes.
	N > 24	Max of average	HB/HA	No.
		Max of 90th percentile	2160 operating hours*	Yes.
90 or more, but below 95	N ≤ 8	Average	2160 operating hours*	Yes.
	N > 8	Max of Average	HB/HA	No.
		Max of 95th percentile	2160 operating hours*	Yes.
Below 90	N > 0	Maximum Value[1]	2160 operating hours*	Yes.

HB/HA = hour before and hour after the outage.
* = Quality-assured, monitor operating hours.
Where unit with add-on emission controls can demonstrate that the controls are operating properly, as provided in § 75.34, the unit may, upon approval, use the maximum controlled emission rate from the previous 720 operating hours.

(b) *SO_2 concentration data.* For each hour of missing SO_2 concentration data,

(1) Whenever the monitor data availability is equal to or greater than 95.0 percent, the owner or operator shall calculate substitute data by means of the automated data acquisition and handling system for each hour of each missing data period according to the following procedures:

(i) For a missing data period less than or equal to 24 hours, substitute the average of the hourly SO_2 concentrations recorded by an SO_2 pollutant concentration monitor for the hour before and the hour after the missing data period.

(ii) For a missing data period greater than 24 hours, substitute the greater of:

(A) The 90th percentile hourly SO_2 concentration recorded by an SO_2 pollutant concentration monitor during the previous 720 quality-assured monitor operating hours; or

(B) The average of the hourly SO_2 concentrations recorded by an SO_2 pollutant concentration monitor for the hour before and the hour after the missing data period.

(2) Whenever the monitor data availability is at least 90.0 percent but less than 95.0 percent, the owner or operator shall calculate substitute data by means of the automated data acquisition and handling system for each hour of each missing data period according to the following procedures:

(i) For a missing data period of less than or equal to 8 hours, substitute the

average of the hourly SO_2 concentrations recorded by an SO_2 pollutant concentration monitor for the hour before and the hour after the missing data period.

(ii) For a missing data period of more than 8 hours, substitute the greater of:

(A) the 95th percentile hourly SO_2 concentration recorded by an SO_2 pollutant concentration monitor during the previous 720 quality-assured monitor operating hours; or

(B) The average of the hourly SO_2 concentrations recorded by an SO_2 pollutant concentration monitor for the hour before and the hour after the missing data period.

(3) Whenever the monitor data availability is less than 90.0 percent, the owner or operator shall substitute for each hour of each missing data period the maximum hourly SO_2 concentration recorded by an SO_2 pollutant concentration monitor during the previous 720 quality-assured monitor operating hours.

(c) *Volumetric flow and NO_x emission rate data.* For each hour of missing volumetric flow or NO_x emission rate data:

(1) Whenever the monitor or continuous emission monitoring system data availability is equal to or greater than 95.0 percent, the owner or operator shall calculate substitute data by means of the automated data acquisition and handling system for each hour of each missing data period according to the following procedures:

(i) For a missing data period less than or equal to 24 hours, substitute the average hourly flow or NO_x emission rate recorded by a flow monitor or NO_x continuous emission monitoring system during the previous 2,160 quality-assured monitor operating hours at the corresponding unit load range recorded for each missing hour, as determined using the procedure in appendix C to this part.

(ii) For a missing data period greater than 24 hours, substitute the greater of:

(A) The 90th percentile hourly flow or NO_x emission rate recorded by a flow monitor or NO_x continuous emission monitoring system at the corresponding unit load range recorded for each missing hour during the previous 2,160 quality-assured monitor operating hours, as determined using the procedure in appendix C to this part; or

(B) The average of the hourly flow or NO_x emission rate recorded by a flow monitor or NO_x continuous emission monitoring system for the hour before and the hour after the missing data period.

(2) Whenever the monitor or continuous emission monitoring system data availability is at least 90.0 percent but less than 95.0 percent, the owner or operator shall calculate substitute data by means of the automated data acquisition and handling system for each hour of each missing data period according to the following procedures:

(i) For a missing data period of less than or equal to 8 hours, substitute the average hourly flow or NO_x emission rate recorded by a flow monitor or NO_x continuous emission monitoring system at the corresponding unit load range recorded for the missing hour during the previous 2,160 quality-assured monitor operating hours, as determined using the procedure in appendix C to this part.

(ii) For a missing data period greater than 8 hours, substitute the greater of:

(A) The 95th percentile hourly flow or NO_x emission rate recorded by a flow monitor or NO_x continuous emission monitoring system at the corresponding unit load range recorded for the missing hour during the previous 2,160 quality-assured monitor operating hours, as determined using the procedure in appendix C to this part; or

(B) The average of the hourly flow or NO_x emission rate recorded by a flow monitor or NO_x continuous emission monitoring system for the hour before and the hour after the missing data period.

(3) Whenever the monitor data availability is less than 90.0 percent, the owner or operator shall calculate substitute data by means of the automated data acquisition and handling system for each hour of each missing data period by substituting the maximum hourly flow or NO_x emission rate recorded by the flow monitor or NO_x continuous emission monitoring system at the corresponding unit load range recorded for the missing hour

during the previous 2,160 quality-assured monitor operating hours, as determined using the procedure in section 2 of appendix C to this part.

(4) Whenever no prior quality-assured flow or NO_x emission rate data exist for the corresponding load range, the owner or operator shall substitute the maximum hourly flow rate or the maximum hourly NO_x emission rate at the next higher level load range for which quality-assured data is available for each hour of missing data.

(5) Whenever no prior quality-assured flow or NO_X emission rate data exist for either the corresponding load range or a higher load range, the owner or operator shall substitute the maximum potential NO_X emission rate or the maximum potential flow rate, as defined in section 2.1 of appendix A of this part.

[58 FR 3701, Jan. 11, 1993, as amended at 60 FR 26529, May 17, 1995; 61 FR 25582, May 22, 1996]

§ 75.34 Units with add-on emission controls.

(a) The owner or operator of an affected unit equipped with add-on SO_2 and/or NO_X emission controls shall use one of the following options for each hour in which quality-assured data from the outlet SO_2 and/or NO_X monitoring system(s) are not obtained:

(1) The owner or operator may use the missing data substitution procedures as specified for all affected units in §§ 75.31 through 75.33 to substitute data for each hour in which the add-on emission controls are operating within the proper parametric ranges specified in the quality assurance/quality control program for the unit, required by section 1 in appendix B of this part. The designated representative shall document in the quality assurance/quality control program the ranges of the add-on emission control operating parameters that indicate proper operation of the controls. The owner or operator shall, for each missing data period, record data to verify the proper operation of the SO_2 or NO_X add-on emission controls during each hour, as described in paragraph (d) of this section. In addition, under § 75.64(c), the designated representative shall submit a certified verification of the proper operation of the SO_2 or NO_X add-on emission control for each missing data period at the end of each quarter.

(2) The designated representative may petition the Administrator under § 75.66 to replace the maximum recorded value in the last 720 quality-assured monitor operating hours with a value corresponding to the maximum controlled emission rate (an emission rate recorded when the add-on emission controls were operating) recorded during the last 720 quality-assured monitor operating hours. For such a petition, the designated representative must demonstrate that the following conditions are met: the monitor data availability, calculated in accordance with § 75.32, for the affected unit is below 90.0 percent and parametric data establish that the add-on emission controls were operating properly (i.e., within the range of operating parameters provided in the quality assurance/quality control program) during the time period under petition.

(3) The designated representative may petition the Administrator under § 75.66 for approval of site-specific parametric monitoring procedure(s) for calculating substitute data for missing SO_2 pollutant concentration and NO_X emission rate data in accordance with the requirements of paragraphs (b) and (c) of this section and appendix C of this part. The owner or operator shall record the data required in appendix C of this part, pursuant to § 75.55(b).

(b) For an affected unit equipped with add-on SO_2 emission controls, the designated representative may petition the Administrator to approve a parametric monitoring procedure, as described in appendix C of this part, for calculating substitute SO_2 concentration data for missing data periods. The owner or operator shall use the procedures in §§ 75.31, 75.33, or 75.34(a) for providing substitute data for missing SO_2 concentration data unless a parametric monitoring procedure has been approved by the Administrator.

(1) Where the monitor data availability is 90.0 percent or more for an outlet SO_2 pollutant concentration monitor, the owner or operator may calculate substitute data using an approved parametric monitoring procedure.

(2) Where the monitor data availability for an outlet SO_2 pollutant concentration monitor is less than 90.0 percent, the owner or operator shall calculate substitute data using the procedures in §75.34(a) (1) or (2), even if the Administrator has approved a parametric monitoring procedure.

(c) For an affected unit with NO_X add-on emission controls, the designated representative may petition the Administrator to approve a parametric monitoring procedure, as described in appendix C of this part, in order to calculate substitute NO_X emission rate data for missing data periods. The owner or operator shall use the procedures in §75.31 or 75.33 for providing substitute data for missing NO_{X2} emission rate data prior to receiving the Administrator's approval for a parametric monitoring procedure.

(1) Where monitor data availability for a NO_X continuous emission monitoring system is 90.0 percent or more, the owner or operator may calculate substitute data using an approved parametric monitoring procedure.

(2) Where monitor data availability for a NO_X continuous emission monitoring system is less than 90.0 percent, the owner or operator shall calculate substitute data using the procedure in §75.34(a) (1) or (2), even if the Administrator has approved a parametric monitoring procedure.

(d) The owner or operator shall keep records of information as described in subpart F of this part to verify the proper operation of the SO_2 or NO_X emission controls during all periods of SO_2 or NO_X emission missing data. The owner or operator shall provide these records to the Administrator or to the EPA Regional Office upon request. Whenever such data are not provided or such data do not demonstrate that proper operation of the SO_2 or NO_X add-on emission controls has been maintained in accordance with the range of add-on emission control operating parameters reported in the quality assurance/quality control program for the unit, the owner or operator shall substitute the maximum potential NO_X emission rate, as defined in §72.2 of this chapter, to report the NO_X emission rate, and either the maximum hourly SO_2 concentration recorded by the inlet monitor during the previous 720 quality-assured monitor operating hours, if available, or the maximum potential concentration for SO_2, as defined by section 2.1.1.1. of appendix A of this part, to report SO_2 concentration for each hour of missing data until information demonstrating proper operation of the SO_2 or NO_X emission controls is available.

[60 FR 26567, May 17, 1995, as amended at 61 FR 59160, Nov. 20, 1996]

§75.35 Missing data procedures for CO_2 data.

(a) On or after January 1, 1996, the owner or operator of a unit with a CO_2 continuous emission monitoring system shall substitute for missing CO_2 concentration data using the procedures of this section. Prior to January 1, 1996, the owner or operator of a unit with a CO_2 continuous emission monitoring system may substitute for missing CO_2 concentration data using the procedures of this section.

(b) During the first 720 quality-assured monitor operating hours following initial certification (i.e., following the date and time of completion of successful certification tests), of the CO_2 continuous emission monitoring system, the owner or operator shall provide substitute data required under this subpart according to the procedures in paragraph (b) of §75.31.

(c) Upon completion of the first 720 quality-assured monitor operating hours following initial certification of the CO_2 continuous emission monitoring system, the owner or operator shall provide substitute data for CO_2 concentration or CO_2 mass emissions required under this subpart according to the procedures in paragraphs (c)(1), (c)(2), or (c)(3) of this section, including CO_2 data calculated from O_2 measurements using the procedures in appendix F of this part.

(1) Whenever a quality-assured monitoring operating hour of CO_2 concentration data has not been obtained and recorded for a period less than or equal to 72 hours or for a missing data period where the percent monitor data availability for the CO_2 continuous emission monitoring system as of the last unit operating hour of the previous calendar quarter was greater than or

equal to 90.0 percent, then the owner or operator shall substitute the average of the recorded CO_2 concentration for the hour before and the hour after the missing data period for each hour in each missing data period.

(2) Whenever no quality-assured CO_2 concentration data are available for a period of 72 consecutive unit operating hours or more, the owner or operator shall begin substituting CO_2 mass emissions calculated using the procedures in appendix G of this part beginning with the seventy-third hour of the missing data period until quality-assured CO_2 concentration data are again available. The owner or operator shall use the CO_2 concentration from the hour before the missing data period to substitute for hours 1 through 72 of the missing data period.

(3) Whenever no quality-assured CO_2 concentration data are available for a period where the percent monitor data availability for the CO_2 continuous emission monitoring system as of the last unit operating hour of the previous calendar quarter was less than 90.0 percent, the owner or operator shall substitute CO_2 mass emissions calculated using the procedures in appendix G of this part for each hour of the missing data period until quality-assured CO_2 concentration data are again available.

[60 FR 26529, May 17, 1995]

§ 75.36 Missing data procedures for heat input.

(a) On or after January 1, 1996, the owner or operator of a unit monitoring heat input with a CO_2 or O_2 pollutant concentration monitor and a flow monitoring system shall substitute for missing heat input data using the procedures of this section. Prior to January 1, 1996, the owner or operator of a unit monitoring heat input with a CO_2 or O_2 pollutant concentration monitor and a flow monitoring system may substitute for missing heat input data using the procedures of this section.

(b) During the first 720 quality-assured monitor operating hours following initial certification (i.e., following the date and time of completion of successful certification tests), of the CO_2 or O_2 pollutant concentration monitor and during the first 2,160 quality-assured monitoring operating hours following initial certification of the flow monitor, the owner or operator shall provide substitute data for heat input calculated under section 5.2 of appendix F of this part by substituting the CO_2 or O_2 concentration measured or substituted according to paragraph (b) of § 75.31, and by substituting the flow rate measured or substituted according to § 75.31.

(c) Upon completion of the first 720 quality-assured monitor operating hours following initial certification of the CO_2 (or O2) pollutant concentration monitor, the owner or operator shall provide substitute data for CO_2 or O_2 concentration to calculate heat input or shall substitute heat input determined under appendix F of this part according to the procedures in paragraphs (c)(1), (c)(2), or (c)(3) of this section. Upon completion of 2,160 quality-assured monitor operating hours following initial certification of the flow monitor, the owner or operator shall provide substitute data for volumetric flow according to the procedures in § 75.33 in order to calculate heat input, unless required to determine heat input using the fuel sampling procedures in appendix F of this part under paragraphs (c)(1), (c)(2) or (c)(3) of this section.

(1) Whenever a quality-assured monitor operating hour of CO_2 or O_2 concentration data has not been obtained and recorded for a period less than or equal to 72 hours or for a missing data period where the percent monitor data availability for the CO_2 or O_2 pollutant concentration monitor as of the last unit operating hour of the previous calendar quarter was greater than or equal to 90.0 percent, the owner or operator shall substitute the average of the recorded CO_2 or O_2 concentration for the hour before and the hour after the missing data period for each hour in each missing data period to calculate heat input.

(2) Whenever a quality-assured monitor operating hour of CO_2 or O_2 concentration data has not been obtained and recorded for a period of 72 consecutive unit operating hours or more, the owner or operator shall begin substituting heat input calculated using the procedures in section 5.5 of appendix F of this part beginning with the

seventy-third hour of the missing data period until quality-assured CO_2 or O_2 concentration data are again available. The owner or operator shall use the CO_2 or O_2 concentration from the hour before the missing data period to substitute for hours 1 through 72 of the missing data period.

(3) Whenever no quality-assured CO_2 or O_2 concentration data are available for a period where the percent monitor data availability for the CO_2 continuous emission monitoring system (or O_2 diluent monitor) as of the last unit operating hour of the previous calendar quarter was less than 90.0 percent, the owner or operator shall substitute heat input calculated using the procedures in section 5.5 of appendix F of this part for each hour of the missing data period until quality-assured CO_2 or O_2 concentration data are again available.

(d) For a unit that has no diluent monitor certified during the period between the certification deadline in §75.4(a) for flow monitoring systems and the certification deadline in §75.4(a) for NO_X and CO_2 continuous emission monitoring systems, the owner or operator shall calculate heat input using the procedures in section 5.5 of appendix F of this part until quality-assured data are available from both a flow monitor and a diluent monitor.

[60 FR 26530, May 17, 1995]

Subpart E—Alternative Monitoring Systems

§75.40 General demonstration requirements.

(a) The owner or operator of an affected unit, or the owner or operator of an affected unit and representing a class of affected units which meet the criteria specified in §75.47, required to install a continuous emission monitoring system may apply to the Administrator for approval of an alternative monitoring system (or system component) to determine average hourly emission data for SO_2, NO_x, and/or volumetric flow by demonstrating that the alternative monitoring system has the same or better precision, reliability, accessibility, and timeliness as that provided by the continuous emission monitoring system.

(b) The requirements of this subpart shall be met by the alternative monitoring system when compared to a contemporaneously operating, fully certified continuous emission monitoring system or a contemporaneously operating reference method, where the appropriate reference methods are listed in §75.22.

§75.41 Precision criteria.

(a) *Data collection and analysis.* To demonstrate precision equal to or better than the continuous emission monitoring system, the owner or operator shall conduct an F-test, a correlation analysis, and a t-test for bias as described in this section. The t-test shall be performed only on sample data at the normal operating level and primary fuel supply, whereas the F-test and the correlation analysis must be performed on each of the data sets required under paragraphs (a)(4) and (a)(5) of this section. The owner or operator shall collect and analyze data according to the following requirements:

(1) Data from the alternative monitoring system and the continuous emission monitoring system shall be collected and paired in a manner that ensures each pair of values applies to hourly average emissions during the same hour.

(2) An alternative monitoring system that directly measures emissions shall have probes or other measuring devices in locations that are in proximity to the continuous emission monitoring system and shall provide data on the same parameters as those measured by the continuous emission monitoring system. Data from the alternative monitoring system shall meet the statistical tests for precision in paragraph (c) of this section and the t-test for bias in appendix A of this part.

(3) An alternative monitoring system that indirectly quantifies emission values by measuring inputs, operating characteristics, or outputs and then applying a regression or another quantitative technique to estimate emissions, shall meet the statistical tests for precision in paragraph (c) of this section and the t-test for bias in Appendix A of this part.

(4) For flow monitor alternatives, the alternative monitoring system must provide sample data for each of three different exhaust gas velocities while the unit or units, if more than one unit exhausts into the stack or duct, is burning its primary fuel at:

(i) A frequently used low operating level, selected within the range between the minimum safe and stable operating level and 50 percent of the maximum operating level,

(ii) A frequently used high operating level, selected within the range between 80 percent of the maximum operating level and the maximum operating level, and

(iii) The normal operating level, or an evenly spaced intermediary level between low and high levels used if the normal operating level is within a specified range (10.0 percent of the maximum operating level), of either paragraphs (a)(4) (i) or (ii) of this section.

(5) For pollutant concentration monitor alternatives, the alternative monitoring system shall provide sample data for the primary fuel supply and for all alternative fuel supplies that have significantly different sulfur content.

(6) For the normal unit operating level and primary fuel supply, paired hourly sample data shall be provided for at least 90.0 percent of the hours during 720 unit operating hours. For each of the remaining two operating levels for flow monitor alternatives, and for each alternative fuel supply for pollutant concentration monitor alternatives, paired hourly sample data shall be provided for at least 24 successive unit operating hours.

(7) The owner or operator shall not use missing data substitution procedures to provide sample data.

(8) If the collected data meet the requirements of the F-test, the correlation test, and the t-test at one or more, but not all, of the operating levels or fuel supplies, the owner or operator may elect to continue collecting the paired data for up to 1,440 additional operating hours and repeat the statistical tests using the data for the entire 30- to 90-day period.

(9) The owner or operator shall provide two separate time series data plots for the data at each operating level or fuel supply described in paragraphs (a)(4) and (a)(5) of this section. Each data plot shall have a horizontal axis that represents the clock hour and calendar date of the readings and shall contain a separate data point for every hour for the duration of the performance evaluation. The data plots shall show the following:

(i) Percentage difference versus time where the vertical axis represents the percentage difference between each paired hourly reading generated by the continuous emission monitoring system (or reference method) and the alternative emission monitoring system as calculated using the following equation:

$$\Delta e = \frac{e_p - e_v}{e_v} \times 100\%$$

(Eq. 10)

where,

Δe=Percentage difference between the readings generated by the alternative monitoring system and the continuous emission monitoring system.

e_p=Measured value from the alternative monitoring system.

e_v=Measured value from the continuous emission monitoring system.

(ii) Alternative monitoring system readings and continuous emission monitoring system (or reference method) readings versus time where the vertical axis represents hourly pollutant concentrations or volumetric flow, as appropriate, and two different symbols are used to represent the readings from the alternative monitoring system and the continuous emission monitoring system (or reference method), respectively.

(b) *Data screening and calculation adjustments.* In preparation for conducting the statistical tests described in paragraph (c) of this section, the owner or operator may screen the data for lognormality and time dependency autocorrelation. If either is detected, the owner or operator shall make the following calculation adjustments:

(1) *Lognormality.* The owner or operator shall conduct any screening and adjustment for lognormality according to the following procedures.

(i) Apply the log transformation to each measured value of either the certified continuous emissions monitoring system or certified flow monitor, using the following equation:

$l_v = \ln e_v$
(Eq. 11)

where,

e_v=Hourly value generated by the certified continuous emissions monitoring system or certified flow monitoring system

l_v=Hourly lognormalized data values for the certified monitoring system

and to each measured value, e_p, of the proposed alternative monitoring system, using the following equation to obtain the lognormalized data values, l_p≦

$l_p = \ln e_p$
(Eq. 12)

where,

e_p=Hourly value generated by the proposed alternative monitoring system.

l_p=Hourly lognormalized data values for the proposed alternative monitoring system.

(ii) Separately test each set of transformed data, l_v and l_p, for normality, using the following:

(A) Shapiro-Wilk test;

(B) Histogram of the transformed data; and

(C) Quantile-Quantile plot of the transformed data.

(iii) The transformed data in a data set will be considered normally distributed if all of the following conditions are satisfied:

(A) The Shapiro-Wilk test statistic, W, is greater than or equal to 0.75 or is not statistically significant at α=0.05.

(B) The histogram of the data is unimodal and symmetric.

(C) The Quantile-Quantile plot is a diagonal straight line.

(iv) If both of the transformed data sets, l_v and l_p, meet the conditions for normality, specified in paragraphs

(b)(1)(iii) (A) through (C) of this section, the owner or operator may use the transformed data, l_v and l_p, in place of the original measured data values in the statistical tests for alternative monitoring systems as described in paragraph (c) of this section and in appendix A of this part.

(v) If the transformed data are used in the statistical tests in paragraph (c) of this section and in appendix A of this part, the owner or operator shall provide the following:

(A) Copy of the original measured values and the corresponding transformed data in printed and electronic format.

(B) Printed copy of the test results and plots described in paragraphs (b)(1)(i) through (iii) of this section.

(2) *Time dependency (autocorrelation).* The screening and adjustment for time dependency are conducted according to the following procedures:

(i) Calculate the degree of autocorrelation of the data on their LAG1 values, where the degree of autocorrelation is represented by the Pearson autocorrelation coefficient, ρ, computed from an AR(1) autoregression model, such that:

$$\rho = \frac{COV(x_i', x_i'')}{s_{x_i'} s_{x_i''}}$$

(Eq. 13)

where,

x'_i=The original data value at hour *i*.

x''_i=The LAG1 data value at hour *i*.

$COV(x'_i, x''_i)$=The autocovariance of x'_i and defined by,

$$COV(x_i', x_i'') = \frac{\sum_{i=1}^{n}(x_i'-\bar{x}')(x_i''-\bar{x}'')}{(n-1)}$$

(Eq. 14)

where,

n=The total number of observations in which both the original value, x'_i, and the lagged value, x''_i, are available in the data set.

s'_{xi}=The standard deviation of the original data values, x'_i defined by,

$$s_{x_i'} = \sqrt{\frac{\sum_{i=1}^{n}(x_i'-\bar{x}')^2}{n-1}}$$

(Eq. 15)

where,

s''_{xi}=The standard deviation of the LAG1 data values, x''_i, defined by

$$s_{x_i''} = \sqrt{\frac{\sum_{i=1}^{n}(x_i''-\bar{x}'')^2}{n-1}}$$

(Eq. 16)

where,

x'=The mean of the original data values, x'_i defined by

$$\bar{x}' = \frac{\sum_{i=1}^{n} x_i'}{n}$$

(Eq. 17)

where,

x''=The mean of the LAG1 data values, x''_i, defined by

$$\bar{x}'' = \frac{\sum_{i=1}^{n} x_i''}{n}$$

(Eq. 18)

where,

(ii) The data in a data set will be considered autocorrelated if the autocorrelation coefficient, ρ, is significant at

the 5 percent significance level. To determine if this condition is satisfied, calculate Z using the following equation:

$$Z = 0.5\left[\ln\left(\frac{1+\rho}{1-\rho}\right)\right]\sqrt{n-3}$$

(Eq. 19)

If $Z > 1.96$, then the autocorrelation coefficient, ρ, is significant at the 5 percent significance level ($a = 0.05$).

(iii) If the data in a data set satisfy the conditions for autocorrelation, specified in paragraph (b)(2)(ii) of this section, the variance of the data, S^2, may be adjusted using the following equation:

$S^2_{ADJ} = VIF \times S^2$

(Eq. 20)

where,

S^2=The original, unadjusted variance of the data set.

VIF=The variance inflation factor, defined by

$$VIF = \frac{1}{\left[1 - \frac{2\rho}{(n-1)(1-\rho)} + \frac{2\rho(1-\rho^n)}{n(n-1)(1-\rho)^2}\right]}$$

(Eq. 21)

S^2_{ADJ}=The autocorrelation-adjusted variance for the data set.

(iv) The procedures described in paragraphs (b)(2)(i)–(iii) of this section may be separately applied to the following data sets in order to derive distinct autocorrelation coefficients and variance inflation factors for each data set:

(A) The set of measured hourly values, e_v, generated by the certified continuous emissions monitoring system or certified flow monitoring system.

(B) The set of hourly values, e_p, generated by the proposed alternative monitoring system,

(C) The set of hourly differences, e_v–e_p, between the hourly values, e_v, generated by the certified continuous emissions monitoring system or certified flow monitoring system and the hourly values, e_p, generated by the proposed alternative monitoring system.

(v) For any data set, listed in paragraph (b)(2)(iv) of this section, that satisfies the conditions for autocorrelation specified in paragraph (b)(2)(ii) of this section, the owner or operator may adjust the variance of that data set, using Equation 20 of this section.

(A) The adjusted variance may be used in place of the corresponding original variance, as calculated using Equation 23 of this section, in the F-test (Equation 24) of this section.

(B) In place of the standard error of the mean,

$$\frac{S_d}{\sqrt{n}}$$

in the bias test Equation A–9 of Appendix A of this part the following adjusted standard error of the mean may be used:

$$\left(\frac{S_d}{\sqrt{n}}\right)_{adj} = \left[\sqrt{\left(\frac{1+\rho}{1-\rho}\right) - \left(\frac{2\rho(1-\rho^n)}{n(1-\rho)^2}\right)}\right] \times \sqrt{VIF} \times \left(\frac{S_d}{\sqrt{n}}\right)$$

where.

$\left(\frac{S_d}{\sqrt{n}}\right)_{adj}$ = The autocorrelation-adjusted standard error of the mean.

(vi) For each data set in which a variance adjustment is used, the owner or operator shall provide the following:

(A) All values in the data set in printed and electronic format.

(B) Values of the autocorrelation coefficient, its level of significance, the variance inflation factor, and the unadjusted original and adjusted values found in Equations 20 and 22 of this section.

(C) Equation and related statistics of the AR(1) autoregression model of the data set.

(D) Printed documentation of the intermediate calculations used to derive the autocorrelation coefficient and the Variance Inflation Factor.

(c) *Statistical Tests.* The owner or operator shall perform the F-test and correlation analysis as described in this paragraph and the t-test for bias described in Appendix A of this part to demonstrate the precision of the alternative monitoring system.

(1) *F-test.* The owner or operator shall conduct the F-test according to the following procedures.

(i) Calculate the variance of the certified continuous emission monitoring system or certified flow monitor as applicable, S_v2, and the proposed method, S_p2, using the following equation.

$$S^2 = \frac{\sum_{i=1}^{n}\left(e_i - e_m\right)^2}{n-1}$$

(Eq. 23)

where,

e_i=Measured values of either the certified continuous emission monitoring system or certified flow monitor, as applicable, or proposed method.

e_m=Mean of either the certified continuous emission monitoring system or certified flow monitor, as applicable, or proposed method values.

n=Total number of paired samples.

(ii) Determine if the variance of the proposed method is significantly different from that of the certified continuous emission monitoring system or certified flow monitor, as applicable, by calculating the F-value using the following equation.

$$F = \frac{S_p^2}{S_v^2}$$

(Eq. 24)

Compare the experimental F-value with the critical value of F at the 95-percent confidence level with n–1 degrees of freedom. The critical value is obtained from a table for F-distribution. If the calculated F-value is greater than the critical value, the proposed method is unacceptable.

(2) *Correlation analysis.* The owner or operator shall conduct the correlation analysis according to the following procedures.

(i) Plot each of the paired emissions readings as a separate point on a graph where the vertical axis represents the value (pollutant concentration or volumetric flow, as appropriate) generated by the alternative monitoring system and the horizontal axis represents the value (pollutant concentration or volumetric flow, as appropriate) generated by the continuous emission monitoring system (or reference method). On the graph, draw a horizontal line representing the mean value, e_p, for the alternative monitoring system and a vertical line representing the mean value, e_v, for the continuous emission monitoring system where,

$$\overline{e_p} = \frac{\sum e_p}{n}$$

(Eq. 25)

$$\overline{e_v} = \frac{\sum e_v}{n}$$

(Eq. 26)

where,

e_p=Hourly value generated by the alternative monitoring system.

e_v=Hourly value generated by the continuous emission monitoring system.

n=Total number of hours for which data were generated for the tests.

A separate graph shall be produced for the data generated at each of the operating levels or fuel supplies described in paragraphs (a)(4) and (a)(5) of this section.

(ii) Use the following equation to calculate the coefficient of correlation, r, between the emissions data from the alternative monitoring system and the continuous emission monitoring system using all hourly data for which paired values were available from both monitoring systems.

$$r = \frac{\sum e_p e_v - \left(\sum e_p\right)\left(\sum e_v\right) \quad n}{\left(\left[\sum e_p^2 - \left(\sum e_p\right)^2 \quad n\right]\left[\sum e_p^2 - \left(\sum e_v\right)^2 \quad n\right]\right)^{(1\ 2)}}$$

(Eq. 27)

(iii) If the calculated r-value is less than 0.8, the proposed method is unacceptable.

[58 FR 3701, Jan. 11, 1993, as amended at 60 FR 26530, May 17, 1995; 60 FR 40296, Aug. 8, 1995]

§75.42 Reliability criteria.

To demonstrate reliability equal to or better than the continuous emission monitoring system, the owner or operator shall demonstrate that the alternative monitoring system is capable of providing valid 1-hr averages for 95.0 percent or more of unit operating hours over a 1-yr period and that the system meets the applicable requirements of Appendix B of this part.

§75.43 Accessibility criteria.

To demonstrate accessibility equal to or better than the continuous emission monitoring system, the owner or operator shall provide reports and on-site records of emission data to demonstrate that the alternative monitoring system provides data meeting the requirements of subparts F and G of this part.

§75.44 Timeliness criteria.

To demonstrate timeliness equal to or better than the continuous emission monitoring system, the owner or operator shall demonstrate that the alternative monitoring system can meet the requirements of subparts F and G of this part; can provide a continuous, quality-assured, permanent record of certified emissions data on an hourly basis; and can issue a record of data for the previous day within 24 hours.

§75.45 Daily quality assurance criteria.

The owner or operator shall either demonstrate that daily tests equivalent to those specified in Appendix B of this part can be performed on the alternative monitoring system or demonstrate and document that such tests are unnecessary for providing quality-assured data.

§75.46 Missing data substitution criteria.

The owner or operator shall demonstrate that all missing data can be accounted for in a manner consistent with the applicable missing data procedures in subpart D of this part.

§75.47 Criteria for a class of affected units.

(a) The owner or operator of an affected unit may represent a class of affected units for the purpose of applying

to the Administrator for a class-approved alternative monitoring system.

(b) The owner or operator of an affected unit representing a class of affected units shall provide the following information:

(1) A description of the affected unit and how it appropriately represents the class of affected units;

(2) A description of the class of affected units, including data describing all the affected units which will comprise the class; and

(3) A demonstration that the magnitude of emissions of all units which will comprise the class of affected units are *de minimis.*

(c) If the Administrator determines that the emissions from all affected units which will comprise the class of units are *de minimis,* then the Administrator shall publish notice in the FEDERAL REGISTER, providing a 30-day period for public comment, prior to granting a class-approved alternative monitoring system.

[60 FR 40297, Aug. 8, 1995]

§ 75.48 Petition for an alternative monitoring system.

(a) The designated representative shall submit the following information in the application for certification or recertification of an alternative monitoring system.

(1) Source identification information.

(2) A description of the alternative monitoring system.

(3) Data, calculations, and results of the statistical tests, specified in § 75.41(c) of this part, including:

(i) Date and hour.

(ii) Hourly test data for the alternative monitoring system at each required operating level and fuel type.

(iii) Hourly test data for the continuous emissions monitoring system at each required operating level and fuel type.

(iv) Arithmetic mean of the alternative monitoring system measurement values, as specified in Equation 24 in § 75.41(c) of this part, of the continuous emission monitoring system values, as specified on Equation 25 in § 75.41(c) of this part, and of their differences.

(v) Standard deviation of the difference, as specified in Equation A–8 in appendix A of this part.

(vi) Confidence coefficient, as specified in Equation A–9 in appendix A of this part.

(vii) The bias test results as specified in § 7.6.4 in appendix A of this part.

(viii) Variance of the measured values for the alternative monitoring system and of the measured values for the continuous emissions monitoring system, as specified in Equation 22 in § 75.41(c) of this part.

(ix) F-statistic, as specified in Equation 23 in § 75.41(c) of this part.

(x) Critical value of F at the 95-percent confidence level with n–1 degrees of freedom.

(xi) Coefficient of correlation, r, as specified in Equation 26 in § 75.41(c) of this part.

(4) Data plots, specified in §§ 75.41(a)(9) and 75.41(c)(2)(i) of this part.

(5) Results of monitor reliability analysis.

(6) Results of monitor accessibility analysis.

(7) Results of monitor timeliness analysis.

(8) A detailed description of the process used to collect data, including location and method of ensuring an accurate assessment of operating hourly conditions on a real-time basis.

(9) A detailed description of the operation, maintenance, and quality assurance procedures for the alternative monitoring system as required in appendix B of this part.

(10) A description of methods used to calculate heat input or diluent gas concentration, if applicable.

(11) Results of tests and measurements (including the results of all reference method field test sheets, charts, laboratory analyses, example calculations, or other data as appropriate) necessary to substantiate that the alternative monitoring system is equivalent in performance to an appropriate, certified operating continuous emission monitoring system.

(b) [Reserved]

[60 FR 40297, Aug. 8, 1995]

Subpart F—Recordkeeping Requirements

§75.50 General recordkeeping provisions.

(a) *Recordkeeping requirements for affected sources.* The provisions of this section shall remain in effect prior to January 1, 1996. The owner or operator shall meet the requirements of either §§75.50 or 75.54 prior to January 1, 1996. On or after January 1, 1996, the owner or operator shall meet the requirements of §75.54 only. The owner or operator of any affected source subject to the requirements of this part shall maintain for each affected unit (or for each group of affected or nonaffected units utilizing a common stack and common monitoring systems pursuant to §75.16 through §75.18 of this part (referred to hereafter as ''each affected unit'')) a file of all measurements, data, reports, and other information required by this part at the source in a form suitable for inspection for at least three (3) years from the date of each record. This file shall contain the following information:

(1) The data and information required in paragraphs (b) through (f) of this section;

(2) The component data and information used to calculate values required in paragraphs (b) through (f) of this section;

(3) The current monitoring plan as specified in §75.53 of this part; and

(4) The quality control plan as described in Appendix B of this part.

(b) *Operating parameter record provisions.* The owner or operator shall record hourly the following information on unit operating time, heat input, and load for each affected unit, including individual affected units utilizing a common stack except as provided in paragraph (b)(6) of this section for when units combust gas:

(1) Date and hour;

(2) Unit operating time (rounded to nearest hour);

(3) Total integrated hourly gross unit load (rounded to nearest MW_{ge}) (or steam load in lb/hr at stated temperature and pressure, rounded to the nearest lb/hr, if elected in the monitoring plan);

(4) Operating load range corresponding to total integrated gross load of 1–10, except for units using a common stack, which may use the number of unit load ranges up to 20, specified in the monitoring plan for the common stack;

(5) Total heat input (mmBtu, rounded to the nearest tenth); and

(6) For when units combust gas, the owner or operator may record total heat input (mmBtu, rounded to the nearest tenth) daily.

(c) *SO_2 emission record provisions.* The owner or operator shall record hourly the information required by this paragraph for each affected unit or group of units using a common stack and common monitoring systems, except a gas-fired or oil-fired unit for which the owner or operator is using the optional protocol in appendix D to this part for estimating SO_2 mass emissions:

(1) For SO_2 concentration, as measured and reported from the certified primary monitor, certified back-up or certified portable monitor, or other approved method of emissions determination:

(i) Monitor-channel identification code as provided for in §75.53;

(ii) Date and hour;

(iii) Hourly average SO_2 concentration (ppm, rounded to the nearest tenth),

(iv) Hourly average SO_2 concentration (ppm, rounded to the nearest tenth) adjusted for bias, if bias adjustment factor is required as provided for in §75.24(d) of this part;

(v) Percent monitor data availability (recorded to the nearest tenth of a percent) calculated pursuant to §75.32 of this part; and

(vi) Method of determination for hourly average SO_2 concentration using Codes 1–13 in Table 3 of this section.

(2) For flow as measured and reported from the certified primary monitor, certified back-up or certified portable monitor or other approved method of emissions determination:

(i) Monitor-channel identification code as provided for in §75.53;

(ii) Date and hour;

(iii) Hourly average volumetric flow rate (in scfh, rounded to the nearest thousand);

(iv) Hourly average volumetric flow rate (in scfh, rounded to the nearest thousand) adjusted for bias, if bias adjustment factor required as provided for in § 75.24(d) of this part;

(v) Hourly average moisture content of flue gases (volume fraction) where SO_2 concentration is measured on dry basis;

(vi) Percent monitor data availability, (recorded to the nearest tenth of a percent), calculated pursuant to § 75.32 of this part; and

(vii) Method of determination for hourly average flow rate using Codes 1–13 in Table 3.

(3) For SO_2 mass emissions as measured and reported from the certified primary monitoring system, certified back-up or certified portable monitoring systems, or other approved method of emissions determination:

(i) Date and hour;

(ii) Hourly average SO_2 mass emissions (lb/hr, rounded to the nearest tenth);

(iii) Hourly average SO_2 mass emissions (lb/hr, rounded to the nearest tenth) adjusted for bias, if bias adjustment factor required, as provided for in § 75.24(d); and

(iv) Unique three-digit code identifying emissions formula used to derive hourly SO_2 mass emissions from SO_2 concentration and flow data in paragraphs (c)(1) and (c)(2) of this section as provided for in § 75.53.

TABLE 3.—CODES FOR METHOD OF EMISSIONS AND FLOW DETERMINATION

Code	Hourly emissions/flow measurement or estimation method
1	Certified primary emission/flow monitoring system.
2	Certified back-up or certified portable emission/flow monitoring system.
3	Approved alternative monitoring system.
4	Reference Method: SO_2≤ Method 6, 6A, 6B, or 6C. Flow: Method 2, 2A, 2C, or 2D. NO_x: Method 7, 7A, 7C, 7D, or 7E. CO_2 or O_2: Method 3, 3A or 3B.
5	For units with add-on SO_2 and/or NO_x emission controls: SO_2 concentration or NO_x emission rate estimate from Agency preapproved parametric monitoring method.
6	Average of the hourly SO_2 concentrations, flow, or NO_x emission rate for the hour before and the hour following a missing data period.
7	Average hourly SO_2 concentration, flow rate, or NO_x emission rate using initial missing data procedures.
8	90th percentile hourly SO_2 concentration, flow rate, or NO_x emission rate.

TABLE 3.—CODES FOR METHOD OF EMISSIONS AND FLOW DETERMINATION—Continued

Code	Hourly emissions/flow measurement or estimation method
9	95th percentile hourly SO_2 concentration, flow rate, or NO_x emission rate.
10	Maximum hourly SO_2 concentration, flow rate, or NO_x emission rate.
11	Average hourly flow rate or NO_x emission rate in corresponding load range.
12	Maximum potential concentration of SO_2 maximum potential flow rate, or NO_x emission rate corresponding to maximum potential concentration of NO_x and minimum O_2 or maximum CO_2 concentration, as determined using section 2.1 of appendix A of this part.
13	Other data (specify method).

(d) *NO_x emission record provisions.* The owner or operator shall record hourly the information required by this paragraph for each affected unit, except for a gas-fired peaking unit or oil-fired peaking unit for which the owner or operator is using the optional protocol in appendix E to this part for estimating NO_x emission rate. For each NO_x emission rate as measured and reported from the certified primary monitor, certified back-up or certified portable monitor, or other approved method of emissions determination:

(1) Monitor-channel identification code as provided for in § 75.53;

(2) Date and hour;

(3) Hourly average NO_x concentration (ppm, rounded to the nearest tenth);

(4) Hourly average diluent gas concentration (percent O_2 or percent CO_2, rounded to the nearest tenth);

(5) Hourly average NO_x emission rate (lb/mmBtu, rounded to nearest hundredth);

(6) Hourly average NO_x emission rate (lb/mmBtu, rounded to nearest hundredth) adjusted for bias, if bias adjustment factor is required as provided for in § 75.24(d) of this part;

(7) Percent monitoring system data availability (recorded to the nearest tenth of a percent), calculated pursuant to § 75.32 of this part;

(8) Method of determination for hourly average NO_x emission rate using Codes 1–13 in Table 3; and

(9) Unique three-digit code identifying emissions formula used to derive hourly average NO_x emission rate, as provided for in § 75.53.

(e) *CO_2 emission record provisions.* The owner or operator shall record or calculate CO_2 emissions for each affected unit using one of the following methods specified in this section:

(1) If the owner or operator chooses to use a CO_2 continuous emission monitoring system (or an O_2 continuous emission monitor and flow monitor as specified in appendix F), then the owner or operator shall record hourly the following information for CO_2 mass emissions, as measured and reported from the certified primary monitor, certified back-up or certified portable monitor, or other approved method of emissions determination:

(i) Monitor-channel identification code as provided for in §75.53;

(ii) Date and hour;

(iii) Hourly average CO_2 (or O_2) concentration (in percent, rounded to the nearest tenth);

(iv) Hourly average volumetric flow rate (scfh, rounded to the nearest scf);

(v) Hourly average CO_2 mass emissions (tons/hr, rounded to the nearest tenth);

(vi) Percent monitor data availability (recorded to the nearest tenth of a percent), calculated pursuant to §75.32 of this part;

(vii) Method of determination for hourly average CO_2 mass emissions using Codes 1–13 in Table 3; and

(viii) Unique three-digit emissions formula used to derive hourly average CO_2 mass emissions, as provided for in §75.53.

(2) As an alternative to §75.50(e)(1), the owner or operator may use the procedures in §75.13 and in appendix G to this part, and shall record daily the following information for CO_2 mass emissions:

(i) Date;

(ii) Daily combustion-formed CO_2 mass emissions (tons/day, rounded to the nearest tenth);

(iii) For coal-fired units, flag indicating whether optional procedure to adjust combustion-formed CO_2 mass emissions for carbon retained in flyash has been used and, if so, the adjustment;

(iv) For a unit with a wet flue gas desulfurization system or other controls generating CO_2, daily sorbent-related CO_2 mass emissions (tons/day, rounded to the nearest tenth); and

(v) For a unit with a wet flue gas desulfurization system or other controls generating CO_2, total daily CO_2 mass emissions (tons/day, rounded to the nearest tenth) as sum of combustion-formed emissions and sorbent-related emissions.

(f) *Opacity record provisions.* The owner or operator shall record every six minutes (or other averaging period specified by the State or local air pollution control agency) the information required by this paragraph for each affected unit, except as provided for in §75.14 (b), (c), and (d). The owner or operator shall also keep records of all incidents of opacity monitor downtime during unit operation, including reason(s) for the monitor outage(s) and any corrective action(s) taken for opacity, as measured and reported by the continuous opacity monitoring system:

(1) Monitor-channel identification code;

(2) Date, hour, and minute;

(3) Average opacity of emissions (in percent opacity);

(4) If the average opacity of emissions exceeds the applicable standard, then a code indicating such an exceedance has occurred; and

(5) Percent monitor data availability, recorded to the nearest tenth of a percent, calculated pursuant to §75.32 of this part.

[58 FR 3701, Jan. 11, 1993, as amended at 58 FR 34126, June 23, 1993; 58 FR 40749, July 30, 1993; 61 FR 25582, May 22, 1996]

§75.51 General recordkeeping provisions for specific situations.

(a) *Specific SO_2 emission record provisions for units with qualifying Phase I technology.* In addition to the SO_2 emissions information required in §75.50(c) of this part, from January 1, 1997, through December 31, 1999, the owner or operator shall record the applicable information in this paragraph for each affected unit on which SO_2 emission controls have been installed and operated for the purpose of meeting qualifying Phase I technology requirements pursuant to §72.42 of this chapter and §75.15.

(1) For units with post-combustion emission controls:

(i) Monitor-channel identification codes for each inlet and outlet SO_2-diluent continuous emission monitoring system;

(ii) Date and hour;

(iii) Hourly average inlet SO_2 emission rate (lb/mmBtu, rounded to nearest hundredth);

(iv) Hourly average inlet SO_2 concentration (ppm, rounded to the nearest tenth) adjusted for bias, if bias adjustment factor required (see §75.24(d) of this part);

(v) Hourly average outlet SO_2 emission rate (lb/mmBtu, rounded to nearest hundredth);

(vi) Hourly average outlet SO_2 concentration (ppm, rounded to the nearest tenth) adjusted for bias, if bias adjustment factor required (see §75.24(d) of this part);

(vii) Percent data availability for both inlet and outlet SO_2-diluent continuous emission monitoring systems (recorded to the nearest tenth of a percent), calculated pursuant to Equation 8 of §75.32 (for the first 8,760 unit operating hours following initial certification) and Equation 9 of §75.32, thereafter; and

(viii) Emissions formula used to derive hourly average inlet and outlet SO_2 emission rates for each affected unit or group of units using a common stack.

(2) For units with combustion and/or pre-combustion emission controls:

(i) Monitor-channel identification codes for each outlet SO_2-diluent continuous emission monitoring system;

(ii) Date and hour;

(iii) Hourly average outlet SO_2 emission rate (lb/mmBtu, rounded to nearest hundredth);

(iv) For units with combustion controls, average daily inlet SO_2 emission rate (lb/mmBtu, rounded to nearest hundredth), determined by coal sampling and analysis procedures in appendix F to this part; and

(v) For units with pre-combustion controls (i.e., fuel pretreatment), fuel analysis demonstrating the weight, sulfur content, and gross calorific value of the product and raw fuel lots.

(b) *Specific parametric data record provisions for calculating substitute emissions data for units with add-on emission controls.* In addition to the SO_2 and NO_x emissions data to be recorded under §75.50, the owner or operator of an affected unit with add-on emission controls, where the owner or operator is using the approved site-specific parametric monitoring procedures for calculation of substitute data in accordance with §75.34, shall also record for each hour during each missing data period the applicable information in this paragraph (b):

(1) For units with add-on SO_2 emission controls, for each hour of missing SO_2 concentration or volumetric flow data:

(i) The information required in §75.50(b) of this part for SO_2 concentration and volumetric flow if either one of these monitors is still operating;

(ii) Date and hour;

(iii) Number of operating scrubber modules;

(iv) Feedrate of makeup slurry to each operating scrubber module (gal/min);

(v) Average pressure differential across each operating scrubber module (inches of water column);

(vi) For a unit with a wet flue gas desulfurization system, an inline measure of absorber pH for each operating scrubber module;

(vii) For a unit with a dry flue gas desulfurization system, the inlet and outlet temperatures across each operating scrubber module;

(viii) For a unit with a dry flue gas desulfurization system, the slurry feed rate (gal/min) to the atomizer nozzle; and

(ix) Method of determination of SO_2 concentration and volumetric flow, using Codes 1–13 in Table 3 of §75.50 of this part.

(2) For units with add-on NO_x emission controls, for each hour of missing NO_x emission rate data:

(i) Date and hour;

(ii) Inlet air flow rate (acfh, rounded to the nearest thousand);

(iii) Excess O_2 concentration of flue gas at stack outlet (rounded to nearest tenth of a percent);

(iv) CO concentration of flue gas at stack outlet (ppm, rounded to the nearest tenth);

(v) Temperature of flue gas at furnace exit or economizer outlet duct (°F); and

(vi) Other parameters specific to NO_x emission controls (e.g., average hourly reagent feedrate).

(c) *Specific SO_2 emission record provisions for gas-fired or oil-fired units using optional protocol in appendix D to this part.* In lieu of recording the information in § 75.50(c) of this section, the owner or operator shall record the applicable information in this paragraph for each affected gas-fired or oil-fired unit for which the owner or operator is using the optional protocol in appendix D to this part for estimating SO_2 mass emissions.

(1) When the unit is combusting oil:

(i) Date and hour;

(ii) Hourly flow rate of oil with the units in which oil flow is recorded, (gal/hr, lb/hr, or bbl/hr, rounded to the nearest tenth);

(iii) Sulfur content of daily oil sample, rounded to nearest tenth of a percent;

(iv) Method of oil sampling (flow proportional, continuous drip, or manual);

(v) Mass of oil combusted each hour (lb/hr, rounded to the nearest tenth); and

(vi) Hourly SO_2 mass emissions (lb/hr, rounded to the nearest tenth).

(2) For gas-fired units or oil-fired units using the optional protocol in appendix D of this part of daily manual oil sampling, when the unit is combusting oil, the highest sulfur content recorded from the most recent 30 daily oil samples rounded to nearest tenth of a percent.

(3) When the unit is combusting natural gas:

(i) Date and hour;

(ii) Daily heat input from natural gas according to procedures in appendix F to this part (mmBtu, rounded to the nearest tenth);

(iii) Sulfur content or SO_2 emission rate, in one of the following formats, in accordance with the appropriate procedure from appendix D of this part:

(A) Sulfur content of daily gas sample, (rounded to the nearest 0.1 grains/100 scf) and the volume of gas combusted per day, in 100 scf; or

(B) SO_2 emission rate from NADB (in lb/mmBtu).

(d) *Specific NO_x emission record provisions for gas-fired peaking units or oil-fired peaking units using optional protocol in appendix E of this part.* In lieu of recording the information in paragraph § 75.50(d), the owner or operator shall record the applicable information in this paragraph for each affected gas-fired peaking unit or oil-fired peaking unit for which the owner or operator is using the optional protocol in appendix E to this part for estimating NO_x emission rate.

(1) When the unit is combusting oil:

(i) Date and hour;

(ii) Average hourly fuel flow of oil with the units in which oil flow is recorded (gal/hour or bbl/hour);

(iii) NO_x emission rate F-factor for oil combusted according to procedure in appendix E to this part; and

(iv) Average hourly NO_x emission rate (lb/mmBtu, rounded to nearest tenth).

(2) When the unit is combusting natural gas:

(i) Date and hour;

(ii) Average daily fuel flow of natural gas (million cubic ft);

(iii) NO_x emission rate F-factor for gas combusted according to procedure in appendix E to this part; and

(iv) Average daily NO_x emission rate (lb/mmBtu, rounded to nearest tenth).

[58 FR 3701, Jan. 11, 1993, as amended at 58 FR 40749, July 30, 1993]

§ 75.52 Certification, quality assurance and quality control record provisions.

(a) The owner or operator shall record the applicable information in this section for each certified monitor or certified monitoring system (including certified backup or certified portable monitors) measuring and recording emissions or flow from an affected unit.

(1) For each SO_2 or NO_x pollutant concentration monitor, flow monitor, CO_2 monitor, or diluent gas monitor, the owner or operator shall record the following for all daily and 7-day calibration error tests, including any follow-up tests after corrective action:

(i) Monitor-channel identification code;

(ii) Instrument span;

(iii) Date and hour;

(iv) Reference value (i.e., calibration gas concentration or reference signal value, in ppm or other appropriate units);

(v) Observed value (monitor response during calibration, in ppm or other appropriate units);

(vi) Percent calibration error (rounded to nearest tenth of a percent);

(vii) Number of out-of-control hours, if any, following test; and

(viii) Description of any adjustments, corrective actions, or maintenance following test.

(2) For each flow monitor, the owner or operator shall record the following for all daily interference checks, including any follow-up tests after corrective action:

(i) Code indicating whether monitor passes or fails the interference check;

(ii) Number of out-of-control hours, if any, following test; and

(iii) Description of any adjustments, corrective actions, or maintenance following test.

(3) For each SO_2 or NO_x pollutant concentration monitor, CO_2 monitor, or diluent gas monitor, the owner or operator shall record the following for the initial and all subsequent linearity check(s), including any follow-up tests after corrective action:

(i) Monitor-channel identification code;

(ii) Instrument span;

(iii) Date and hour;

(iv) Reference value (i.e., reference gas concentration, in ppm or other appropriate units);

(v) Observed value (average monitor response at each reference gas concentration, in ppm or other appropriate units);

(vi) Percent error at each of three reference gas concentrations (rounded to nearest tenth of a percent);

(vii) Number of out-of-control hours, if any, following test; and

(viii) Description of any adjustments, corrective action, or maintenance following test.

(4) For each flow monitor, where applicable, the owner or operator shall record the following for all quarterly leak checks, including any follow-up tests after corrective action:

(i) Code indicating whether monitor passes or fails the quarterly leak check;

(ii) Number of out-of-control hours, if any, following test; and

(iii) Description of any adjustments, corrective actions, or maintenance following test.

(5) For each SO_2 pollutant concentration monitor, flow monitor, CO_2 pollutant concentration monitor, NO_x continuous emission monitoring system, SO_2 diluent continuous emission monitoring system, and approved alternative monitoring system, the owner or operator shall record the following information for the initial and all subsequent relative accuracy tests and test audits:

(i) Date and hour;

(ii) Reference method(s) used;

(iii) Individual test run data from the relative accuracy test audit for the SO_2 concentration monitor, flow monitor, CO_2 pollutant concentration monitor, NO_x continuous emission monitoring system, SO_2-diluent continuous emission monitoring system, or approved alternative monitoring systems, including:

(A) Date, hour, and minute of beginning of test run,

(B) Date, hour, and minute of end of test run,

(C) Monitor-channel identification code,

(D) Run number,

(E) Run data for monitor;

(F) Run data for reference method; and

(G) Flag value (0 or 1) indicating whether run has been used in calculating relative accuracy and bias values.

(iv) Calculations and tabulated results, as follows:

(A) Arithmetic mean of the monitoring system measurement values, of the reference method values, and of their differences, as specified in Equation A–7 in appendix A to this part.

(B) Standard deviation, as specified in Equation A–8 in appendix A to this part.

(C) Confidence coefficient, as specified in Equation A–9 in appendix A to this part.

(D) Relative accuracy test results, as specified in Equation A–10 in appendix A to this part. (For the 3-level flow

monitor test only, relative accuracy test results should be recorded at each of three gas velocities. Each of these three gas velocities shall be expressed as a total integrated gross unit load, rounded to the nearest MWe.)

(E) Bias test results as specified in section 7.6.4 in appendix A to this part.

(F) Bias adjustment factor from Equations A–11 and A–12 in appendix A to this part for any monitoring system or component that failed the bias test and 1.0 for any monitoring system or component that passed the bias test. (For flow monitors only, bias adjustment factors should be recorded at each of three gas velocities).

(v) Number of out-of-control hours, if any, following test.

(vi) Description of any adjustment, corrective action, or maintenance following test.

(6) F-factor value(s) used to convert NO_x pollutant concentration and diluent gas (O_2 or CO_2) concentration measurements into NO_x emission rates (in lb/mmBtu), heat input or CO_2 emissions.

(7) Results of all trial runs and certification tests and quality assurance activities and measurements (including all reference method field test sheets, charts, records of combined system responses, laboratory analyses, and example calculations) necessary to substantiate compliance with all relevant appendices in this part.

(b) [Reserved]

[58 FR 3701, Jan. 11, 1993, as amended at 58 FR 40749, July 30, 1993]

§ 75.53 Monitoring plan.

(a) *General provisions.* The owner or operator of an affected unit shall prepare and maintain a monitoring plan. Except as provided in paragraph (d) of this section, a monitoring plan shall contain sufficient information on the continuous emission or opacity monitoring systems or excepted monitoring systems under appendix D or E of this part and the use of data derived from these systems to demonstrate that all unit SO_2 emissions, NO_X emissions, CO_2 emissions, and opacity are monitored and reported.

(b) Whenever the owner or operator makes a replacement, modification, or change, either in the certified continuous emission monitoring system or continuous opacity monitoring system or excepted monitoring systems under appendix D or E of this part, including a change in the automated data acquisition and handling system or in the flue gas handling system, that requires recertification, then the owner or operator shall update the monitoring plan.

(c) *Contents of the monitoring plan.* Each monitoring plan shall contain the following:

(1) Precertification information, including, as applicable, the identification of the test strategy, protocol for the relative accuracy test audit, other relevant test information, span calculations, and apportionment strategies under §§ 75.13 through 75.17 of this part.

(2) *Unit table.* A table identifying ORISPL numbers developed by the Department of Energy and used in the National Allowance Database, for all affected units involved in the monitoring plan, with the following information for each unit:

(i) Short name;

(ii) Classification of unit as one of the following: Phase I (including substitution or compensating units), Phase II, new, or nonaffected;

(iii) Type of boiler (or boilers for a group of units using a common stack);

(iv) Type of fuel(s) fired, by boiler, and if more than one fuel, the fuel classification of the boiler;

(v) Type(s) of emission controls for SO_2, NO_x, and particulates installed or to be installed, including specifications of whether such controls are pre-combustion, post-combustion, or integral to the combustion process; and

(vi) Identification of all units using a common stack.

(3) *Description of monitor site location.* Description of site locations for each monitoring component in the continuous emission or opacity monitoring systems, including schematic diagrams and engineering drawings specified in paragraphs (c)(7) and (c)(8) of this section, and any other documentation that demonstrates each monitor location meets the appropriate siting criteria.

(4) *Monitoring component table.* Identification and description of each monitoring component (including each

monitor and its identifiable components such as analyzer and/or probe) in the continuous emission monitoring systems (i.e., SO_2 pollutant concentration monitor, flow monitor, moisture monitor; NO_X pollutant concentration monitor and diluent gas monitor) the continuous opacity monitoring system, or excepted monitoring system (i.e., fuel flowmeter, data acquisition and handling system), including:

(i) Manufacturer model number and serial number;

(ii) Component/system identification code assigned by the utility to each identifiable monitoring component (such as the analyzer and/or probe). The code shall use a six-digit format, unique to each monitoring component, where the first three digits indicate the number of the component and the second three digits indicate the system to which the component belongs;

(iii) Actual or projected installation date (month and year);

(iv) A brief description of the component type or method of operation, such as in situ pollutant concentration monitor or thermal flow monitor;

(v) A brief description of the flow monitor that is sufficiently detailed to allow a determination of whether the applicable interference check design specification meets the requirements specified in appendix A of this part; and

(vi) A designation of the system as a primary, redundant backup, non-redundant backup or reference method backup system, as provided for in § 75.10(e).

(5) *Data acquisition and handling system table.* Identification and description of all major hardware and software components of the automated data acquisition and handling system, including:

(i) For hardware components, the manufacturer, model number, and actual or projected installation date;

(ii) For software components, identification of the provider and a brief description of features;

(iii) A data flow diagram denoting the complete information handling path from output signals of continuous emission monitoring system components to final reports;

(iv) A copy of the test results verifying the accuracy of the automated data acquisition and handling system (once such results are available).

(6) *Emissions formula table.* A table giving explicit formulas for each reported unit emission parameter, using component/system identification codes to link continuous emission monitoring system or excepted monitoring system observations with reported concentrations, mass emissions, or emission rates, according to the conversions listed in appendix D, E, or F to this part. The formulas must contain all constants and factors required to derive mass emissions or emission rates from component/system code observations, and each emissions formula is identified with a unique three digit code.

(7) *Schematic stack diagrams.* For units monitored by a continuous emission or opacity monitoring system, a schematic diagram identifying entire gas handling system from boiler to stack for all affected units, using identification numbers for units, monitor components, and stacks corresponding to the identification numbers provided in paragraphs (c)(2), (c)(4), (c)(5), and (c)(6) of this section. The schematic diagram must depict stack height and the height of any monitor locations. Comprehensive and/or separate schematic diagrams shall be used to describe groups of units using a common stack.

(8) *Stack and duct engineering diagrams.* For units monitored by a continuous emission or opacity monitoring system, stack and duct engineering diagrams showing the dimensions and location of fans, turning vanes, air preheaters, monitor components, probes, reference method sampling ports and other equipment which affects the monitoring system location, performance or quality control checks.

(9) Inside crosssectional area (ft^2) at flue exit and at flow monitoring location.

(10) *Span and calibration gas.* A table or description identifying maximum potential concentration, maximum expected concentration (if applicable), maximum potential flow rate, maximum potential NO_X emission rate, span value, and full-scale range for each SO_2, NO_X, CO_2, O_2, or flow component

monitor. In addition, the table must identify calibration gas levels for the calibration error test and the linearity check, and calculations made to determine each span value.

(d) *Contents of monitoring plan for specific situations.* The following additional information shall be included in the monitoring plan for gas-fired or oil-fired units:

(1) For each gas-fired unit or oil-fired unit for which the owner or operator uses the optional protocol in appendix D of this part for estimating SO_2 mass emissions or appendix E of this part for estimating NO_X emission rate (using a fuel flow meter), the designated representative shall include in the monitoring plan:

(i) A description of the fuel flowmeter (and data demonstrating its flow meter accuracy, when available);

(ii) The installation location of each fuel flowmeter;

(iii) The fuel sampling location(s); and

(iv) Procedures used for calibrating each fuel flowmeter.

(2) For each gas-fired peaking unit and oil-fired peaking unit for which the owner or operator uses the optional procedures in appendix E of this part for estimating NO_X emission rate, the designated representative shall include in the monitoring plan:

(i) A protocol containing methods used to perform the baseline or periodic NO_X emission test, and a copy of initial performance test results (when such results are available);

(ii) Unit operating and capacity factor information demonstrating that the unit qualifies as a peaking unit, as defined in §72.2 of this chapter; and

(iii) Unit operating parameters related to NO_X formation by the unit.

(3) For each gas-fired unit and diesel-fired unit or unit with a wet flue gas pollution control system for which the designated representative claims an opacity monitoring exemption under §75.14, the designated representative shall include in the monitoring plan information demonstrating that the unit qualifies for the exemption.

[58 FR 3701, Jan. 11, 1993, as amended at 60 FR 26532, 26568, May 17, 1995; 61 FR 59161, Nov. 20, 1996]

§75.54 General recordkeeping provisions.

(a) *Recordkeeping requirements for affected sources.* On or after January 1, 1996, the owner or operator shall meet the requirements of this section. The owner or operator of any affected source subject to the requirements of this part shall maintain for each affected unit a file of all measurements, data, reports, and other information required by this part at the source in a form suitable for inspection for at least three (3) years from the date of each record. Unless otherwise provided, throughout this subpart the phrase ''for each affected unit'' also applies to each group of affected or nonaffected units utilizing a common stack and common monitoring systems, pursuant to §§75.13 through 75.18, or utilizing a common pipe header and common fuel flowmeter, pursuant to section 2.1.2 of appendix D of this part. The file shall contain the following information:

(1) The data and information required in paragraphs (b) through (f) of this section, beginning with the earlier of the date of provisional certification, or the deadline in §75.4(a), (b) or (c);

(2) The supporting data and information used to calculate values required in paragraphs (b) through (f) of this section, excluding the subhourly data points used to compute hourly averages under §75.10(d), beginning with the earlier of the date of provisional certification, or the deadline in §75.4(a), (b) or (c);

(3) The data and information required in §75.55 of this part for specific situations, as applicable, beginning with the earlier of the date of provisional certification, or the deadline in §75.4(a), (b) or (c);

(4) The certification test data and information required in §75.56 for tests required under §75.20, beginning with the date of the first certification test performed, and the quality assurance and quality control data and information required in §75.56 for tests and the quality assurance/quality control plan required under §75.21 and appendix B of this part, beginning with the date of provisional certification;

(5) The current monitoring plan as specified in §75.53, beginning with the

initial submission required by § 75.62; and

(6) The quality control plan as described in appendix B to this part, beginning with the date of provisional certification.

(b) *Operating parameter record provisions.* The owner or operator shall record for each hour the following information on unit operating time, heat input, and load separately for each affected unit, and also for each group of units utilizing a common stack and a common monitoring system or utilizing a common pipe header and common fuel flowmeter, except that separate heat input data for each unit shall not be required after January 1, 2000 for any unit, other than an opt-in source, that does not have a NO_X emission limitation under part 76 of this chapter.

(1) Date and hour;

(2) Unit operating time (rounded up to nearest 15 minutes);

(3) Total hourly gross unit load (rounded to nearest MWge) (or steam load in lb/hr at stated temperature and pressure, rounded to the nearest 1000 lb/hr, if elected in the monitoring plan);

(4) Operating load range corresponding to total gross load of 1–10, except for units using a common stack or common pipe header, which may use the number of unit load ranges up to 20 for flow, as specified in the monitoring plan; and

(5) Total heat input (mmBtu, rounded to the nearest tenth).

(c) *SO_2 emission record provisions.* The owner or operator shall record for each hour the information required by this paragraph for each affected unit or group of units using a common stack and common monitoring systems, except as provided under § 75.11(e) or for a gas-fired or oil-fired unit for which the owner or operator is using the optional protocol in appendix D to this part for estimating SO_2 mass emissions:

(1) For SO_2 concentration, as measured and reported from each certified primary monitor, certified back-up monitor, or other approved method of emissions determination:

(i) Component-system identification code as provided for in § 75.53;

(ii) Date and hour;

(iii) Hourly average SO_2 concentration (ppm, rounded to the nearest tenth);

(iv) Hourly average SO_2 concentration (ppm, rounded to the nearest tenth) adjusted for bias, if bias adjustment factor is required as provided for in § 75.24(d);

(v) Percent monitor data availability (recorded to the nearest tenth of a percent) calculated pursuant to § 75.32; and

(vi) Method of determination for hourly average SO_2 concentration using Codes 1–15 in Table 4 of this section.

(2) For flow as measured and reported from each certified primary monitor, certified back-up monitor or other approved method of emissions determination:

(i) Component/system identification code as provided for in § 75.53;

(ii) Date and hour;

(iii) Hourly average volumetric flow rate (in scfh, rounded to the nearest thousand);

(iv) Hourly average volumetric flow rate (in scfh, rounded to the nearest thousand) adjusted for bias, if bias adjustment factor required as provided for in § 75.24(d);

(v) Hourly average moisture content of flue gases (percent, rounded to the nearest tenth) where SO_2 concentration is measured on dry basis;

(vi) Percent monitor data availability (recorded to the nearest tenth of a percent), calculated pursuant to § 75.32; and

(vii) Method of determination for hourly average flow rate using Codes 1–15 in Table 4.

(3) For SO_2 mass emissions as measured and reported from the certified primary monitoring system(s), certified redundant or non-redundant back-up monitoring system(s), or other approved method(s) of emissions determination:

(i) Date and hour;

(ii) Hourly SO_2 mass emissions (lb/hr, rounded to the nearest tenth);

(iii) Hourly SO_2 mass emissions (lb/hr, rounded to the nearest tenth) adjusted for bias, if bias adjustment factor required, as provided for in § 75.24(d); and

(iv) Identification code for emissions formula used to derive hourly SO_2 mass

emissions from SO_2 concentration and flow data in paragraphs (c)(1) and (c)(2) of this section as provided for in § 75.53.

TABLE 4.—CODES FOR METHOD OF EMISSIONS AND FLOW DETERMINATION

Code	Hourly emissions/flow measurement or estimation method
1	Certified primary emission/flow monitoring system.
2	Certified back-up emission/flow monitoring system.
3	Approved alternative monitoring system.
4	Reference method: $SO_{2\leq}$ Method 6C. Flow: Method 2. $NO_{X\leq}$ Method 7E. CO_2 or $O_{2\leq}$ Method 3A.
5	For units with add-on SO_2 and/or NO_X emission controls: SO_2 concentration or NO_X emission rate estimate from Agency preapproved parametric monitoring method.
6	Average of the hourly SO_2 concentrations, CO_2 concentrations, flow, or NO_X emission rate for the hour before and the hour following a missing data period.
7	Hourly average SO_2 concentration, CO_2 concentration, flow rate, or NO_X emission rate using initial missing data procedures.
8	90th percentile hourly SO_2 concentration, flow rate, or NO_X emission rate.
9	95th percentile hourly SO_2 concentration, flow rate, or NO_X emission rate.
10	Maximum hourly SO_2 concentration, flow rate, or NO_X emission rate.
11	Hourly average flow rate or NO_X emission rate in corresponding load range.
12	Maximum potential concentration of SO_2, maximum potential flow rate, or maximum potential NO_X emission rate, as determined using section 2.1 of appendix A of this part, or maximum CO_2 concentration.
13	Other data (specify method).
14	Minimum CO_2 concentration of 5.0 percent CO_2 or maximum O_2 concentration of 14.0 percent to be substituted optionally for measured diluent gas concentrations during unit startup, for NO_X emission rate or SO_2 emission rate in lb/mmBtu or for CO_2 concentration.
15	Fuel analysis data from appendix G of this part for CO_2 mass emissions.

(d) *NO_X emission record provisions.* The owner or operator shall record the information required by this paragraph for each affected unit for each hour, except for a gas-fired peaking unit or oil-fired peaking unit for which the owner or operator is using the optional protocol in appendix E to this part for estimating NO_X emission rate. For each NO_X emission rate as measured and reported from the certified primary monitor, certified back-up monitor, or other approved method of emissions determination:

(1) Component/system identification code as provided for in § 75.53;

(2) Date and hour;

(3) Hourly average NO_X concentration (ppm, rounded to the nearest tenth);

(4) Hourly average diluent gas concentration (percent O_2 or percent CO_2, rounded to the nearest tenth);

(5) Hourly average NO_X emission rate (lb/mmBtu, rounded to nearest hundredth);

(6) Hourly average NO_X emission rate (lb/mmBtu, rounded to nearest hundredth) adjusted for bias, if bias adjustment factor is required as provided for in § 75.24(d);

(7) Percent monitoring system data availability, (recorded to the nearest tenth of a percent), calculated pursuant to § 75.32;

(8) Method of determination for hourly average NO_X emission rate using Codes 1–15 in Table 4; and

(9) Identification code for emissions formula used to derive hourly average NO_X emission rate, as provided for in § 75.53.

(e) *CO_2 emission record provisions.* The owner or operator shall record or calculate CO_2 emissions for each affected unit using one of the following methods specified in this section:

(1) If the owner or operator chooses to use a CO_2 continuous emission monitoring system (including an O_2 monitor and flow monitor as specified in appendix F of this part), then the owner or operator shall record for each hour the following information for CO_2 mass emissions, as measured and reported from the certified primary monitor, certified back-up monitor, or other approved method of emissions determination:

(i) Component/system identification code as provided for in § 75.53;

(ii) Date and hour;

(iii) Hourly average CO_2 concentration (in percent, rounded to the nearest tenth);

(iv) Hourly average volumetric flow rate (scfh, rounded to the nearest thousand scfh);

(v) Hourly CO_2 mass emissions (tons/hr, rounded to the nearest tenth);

(vi) Percent monitor data availability (recorded to the nearest tenth of a percent); calculated pursuant to § 75.32;

(vii) Method of determination for hourly CO_2 mass emissions using Codes 1–15 in Table 4; and

(viii) Identification code for emissions formula used to derive average hourly CO_2 mass emissions, as provided for in § 75.53.

(2) As an alternative to § 75.54(e)(1), the owner or operator may use the procedures in § 75.13 and in appendix G to this part, and shall record daily the following information for CO_2 mass emissions:

(i) Date;

(ii) Daily combustion-formed CO_2 mass emissions (tons/day, rounded to the nearest tenth);

(iii) For coal-fired units, flag indicating whether optional procedure to adjust combustion-formed CO_2 mass emissions for carbon retained in flyash has been used and, if so, the adjustment;

(iv) For a unit with a wet flue gas desulfurization system or other controls generating CO_2, daily sorbent-related CO_2 mass emissions (tons/day, rounded to the nearest tenth); and

(v) For a unit with a wet flue gas desulfurization system or other controls generating CO_2, total daily CO_2 mass emissions (tons/day, rounded to the nearest tenth) as sum of combustion-formed emissions and sorbent-related emissions.

(f) *Opacity records.* The owner or operator shall record opacity data as specified by the State or local air pollution control agency. If the State or local air pollution control agency does not specify recordkeeping requirements for opacity, then record the information required by paragraphs (f) (1) through (5) of this section for each affected unit, except as provided for in § 75.14 (b), (c), and (d). The owner or operator shall also keep records of all incidents of opacity monitor downtime during unit operation, including reason(s) for the monitor outage(s) and any corrective action(s) taken for opacity, as measured and reported by the continuous opacity monitoring system:

(1) Component/system identification code;

(2) Date, hour, and minute;

(3) Average opacity of emissions for each six minute averaging period (in percent opacity);

(4) If the average opacity of emissions exceeds the applicable standard, then a code indicating such an exceedance has occurred; and

(5) Percent monitor data availability, recorded to the nearest tenth of a percent, calculated according to the requirements of the procedure recommended for State Implementation Plans in appendix M of part 51 of this chapter.

[60 FR 26533, May 17, 1995]

§ 75.55 General recordkeeping provisions for specific situations.

(a) *Specific SO_2 emission record provisions for units with qualifying Phase I technology.* In addition to the SO_2 emissions information required in § 75.54(c), from January 1, 1997, through December 31, 1999, the owner or operator shall record the applicable information in this paragraph for each affected unit on which SO_2 emission controls have been installed and operated for the purpose of meeting qualifying Phase I technology requirements pursuant to § 72.42 of this chapter and § 75.15.

(1) For units with post-combustion emission controls:

(i) Component/system identification codes for each inlet and outlet SO_2-diluent continuous emission monitoring system;

(ii) Date and hour;

(iii) Hourly average inlet SO_2 emission rate (lb/mmBtu, rounded to nearest hundredth);

(iv) Hourly average outlet SO_2 emission rate (lb/mmBtu, rounded to nearest hundredth);

(v) Percent data availability for both inlet and outlet SO_2-diluent continuous emission monitoring systems (recorded to the nearest tenth of a percent), calculated pursuant to Equation 8 of § 75.32 (for the first 8,760 unit operating hours following initial certification) and Equation 9 of § 75.32, thereafter; and

(vi) Identification code for emissions formula used to derive hourly average inlet and outlet SO_2 mass emissions rates for each affected unit or group of units using a common stack.

(2) For units with combustion and/or pre-combustion emission controls:

(i) Component/system identification codes for each outlet SO_2-diluent continuous emission monitoring system;

(ii) Date and hour;

(iii) Hourly average outlet SO_2 emission rate (lb/mmBtu, rounded to nearest hundredth);

(iv) For units with combustion controls, average daily inlet SO_2 emission rate (lb/mmBtu, rounded to nearest hundredth), determined by coal sampling and analysis procedures in § 75.15; and

(v) For units with pre-combustion controls (i.e., fuel pretreatment), fuel analysis demonstrating the weight, sulfur content, and gross calorific value of the product and raw fuel lots.

(b) *Specific parametric data record provisions for calculating substitute emissions data for units with add-on emission controls.* In accordance with § 75.34, the owner or operator of an affected unit with add-on emission controls shall either record the applicable information in paragraph (b)(3) of this section for each hour of missing SO_2 concentration data or NO_X emission rate (in addition to other information), or shall record the information in paragraph (b)(1) of this section for SO_2 or paragraph (b)(2) of this section for NO_X through an automated data acquisition and handling system, as appropriate to the type of add-on emission controls:

(1) For units with add-on SO_2 emission controls petitioning to use or using the optional parametric monitoring procedures in appendix C of this part, for each hour of missing SO_2 concentration or volumetric flow data:

(i) The information required in § 75.54(b) for SO_2 concentration and volumetric flow if either one of these monitors is still operating;

(ii) Date and hour;

(iii) Number of operating scrubber modules;

(iv) Total feedrate of slurry to each operating scrubber module (gal/min);

(v) Pressure differential across each operating scrubber module (inches of water column);

(vi) For a unit with a wet flue gas desulfurization system, an inline measure of absorber pH for each operating scrubber module;

(vii) For a unit with a dry flue gas desulfurization system, the inlet and outlet temperatures across each operating scrubber module;

(viii) For a unit with a wet flue gas desulfurization system, the percent solids in slurry for each scrubber module.

(ix) For a unit with a dry flue gas desulfurization system, the slurry feed rate (gal/min) to the atomizer nozzle;

(x) For a unit with SO_2 add-on emission controls other than wet or dry limestone, corresponding parameters approved by the Administrator;

(xi) Method of determination of SO_2 concentration and volumetric flow, using Codes 1–15 in Table 3 of § 75.54; and

(xii) Inlet and outlet SO_2 concentration values recorded by an SO_2 continuous emission monitoring system and the removal efficiency of the add-on emission controls.

(2) For units with add-on NO_X emission controls petitioning to use or using the optional parametric monitoring procedures in appendix C of this part, for each hour of missing NO_X emission rate data:

(i) Date and hour;

(ii) Inlet air flow rate (acfh, rounded to the nearest thousand);

(iii) Excess O_2 concentration of flue gas at stack outlet (percent, rounded to nearest tenth of a percent);

(iv) Carbon monoxide concentration of flue gas at stack outlet (ppm, rounded to the nearest tenth);

(v) Temperature of flue gas at furnace exit or economizer outlet duct (°F); and

(vi) Other parameters specific to NO_X emission controls (e.g., average hourly reagent feedrate);

(vii) Method of determination of NO_X emission rate using Codes 1–15 in Table 3 of § 75.54; and

(viii) Inlet and outlet NO_X emission rate values recorded by a NO_X continuous emission monitoring system and the removal efficiency of the add-on emission controls.

(3) For units with add-on SO_2 or NO_X emission controls following the provisions of § 75.34 (a)(1) or (a)(2), the owner or operator shall, for each hour of missing SO_2 or NO_X emission data, record:

(i) Parametric data which demonstrate the proper operation of the add-on emission controls, as described

in the quality assurance/quality control program for the unit. The parametric data shall be maintained on site, and shall be submitted upon request to the Administrator, an EPA Regional office, State, or local agency;

(ii) A flag indicating either that the add-on emission controls are operating properly, as evidenced by all parameters being within the ranges specified in the quality assurance/quality control program, or that the add-on emission controls are not operating properly;

(iii) For units petitioning under § 75.66 for substituting a representative SO_2 concentration during missing data periods, any available inlet and outlet SO_2 concentration values recorded by an SO_2 continuous emission monitoring system; and

(iv) For units petitioning under § 75.66 for substituting a representative NO_X emission rate during missing data periods, any available inlet and outlet NO_X emission rate values recorded by a NO_X continuous emission monitoring system.

(c) *Specific SO_2 emission record provisions for gas-fired or oil-fired units using optional protocol in appendix D of this part.* In lieu of recording the information in § 75.54(c) of this section, the owner or operator shall record the applicable information in this paragraph for each affected gas-fired or oil-fired unit for which the owner or operator is using the optional protocol in appendix D of this part for estimating SO_2 mass emissions.

(1) For each hour when the unit is combusting oil:

(i) Date and hour;

(ii) Hourly average flow rate of oil with the units in which oil flow is recorded, (gal/hr, lb/hr, m^3/hr, or bbl/hr, rounded to the nearest tenth)(flag value if derived from missing data procedures);

(iii) Sulfur content of oil sample used to determine SO_2 mass emissions, rounded to nearest hundredth for diesel fuel or to the nearest tenth of a percent for other fuel oil (flag value if derived from missing data procedures);

(iv) Method of oil sampling (flow proportional, continuous drip, as delivered or manual);

(v) Mass of oil combusted each hour (lb/hr, rounded to the nearest tenth);

(vi) SO_2 mass emissions from oil (lb/hr, rounded to the nearest tenth);

(vii) For units using volumetric oil flowmeters, density of oil (flag value if derived from missing data procedures);

(viii) Gross calorific value (heat content) of oil, used to determine heat input (Btu/mass unit) (flag value if derived from missing data procedures);

(ix) Hourly heat input rate from oil according to procedures in appendix F of this part (mmBtu/hr, to the nearest tenth); and

(x) Fuel usage time for combustion of oil during the hour, rounded up to the nearest 15 min.

(2) For gas-fired units or oil-fired units using the optional protocol in appendix D of this part of daily manual oil sampling, when the unit is combusting oil, the highest sulfur content recorded from the most recent 30 daily oil samples rounded to nearest tenth of a percent.

(3) For each hour when the unit is combusting gaseous fuel,

(i) Date and hour;

(ii) Hourly heat input rate from gaseous fuel according to procedures in appendix F to this part (mmBtu/hr, rounded to the nearest tenth);

(iii) Sulfur content or SO_2 emission rate, in one of the following formats, in accordance with the appropriate procedure from appendix D of this part:

(A) Sulfur content of gas sample, (rounded to the nearest 0.1 grains/100 scf) (flag value if derived from missing data procedures); or

(B) SO_2 emission rate of 0.0006 lb/mmBtu for pipeline natural gas;

(iv) Hourly flow rate of gaseous fuel, in 100 scfh (flag value if derived from missing data procedures);

(v) Gross calorific value (heat content) of gaseous fuel, used to determine heat input (Btu/scf) (flag value if derived from missing data procedures);

(vi) Heat input rate from gaseous fuel (mmBtu/hr, rounded to the nearest tenth);

(vii) SO_2 mass emissions due to the combustion of gaseous fuels, lb/hr; and

(viii) Fuel usage time for combustion of gaseous fuel during the hour, rounded up to the nearest 15 min.

(4) For each oil sample or sample of diesel fuel:

(i) Date of sampling;

(ii) Sulfur content (percent, rounded to the nearest hundredth for diesel fuel and to the nearest tenth for other fuel oil) (flag value if derived from missing data procedures);

(iii) Gross calorific value or heat content (Btu/lb) (flag value if derived from missing data procedures); and

(iv) Density or specific gravity, if required to convert volume to mass (flag value if derived from missing data procedures).

(5) For each daily sample of gaseous fuel:

(i) Date of sampling;

(ii) Sulfur content (grains/100 scf, rounded to the nearest tenth) (flag value if derived from missing data procedures);

(6) For each monthly sample of gaseous fuel:

(i) Date of sampling;

(ii) Gross calorific value or heat content (Btu/scf) (flag value if derived from missing data procedures).

(d) *Specific NO_X emission record provisions for gas-fired peaking units or oil-fired peaking units using optional protocol in appendix E of this part.* In lieu of recording the information in paragraph § 75.54(d), the owner or operator shall record the applicable information in this paragraph for each affected gas-fired peaking unit or oil-fired peaking unit for which the owner or operator is using the optional protocol in appendix E of this part for estimating NO_X emission rate.

(1) For each hour when the unit is combusting oil,

(i) Date and hour;

(ii) Hourly average fuel flow rate of oil with the units in which oil flow is recorded (gal/hour, lb/hr or bbl/hour) (flag value if derived from missing data procedures);

(iii) Gross calorific value (heat content) of oil, used to determine heat input (Btu/lb) (flag value if derived from missing data procedures);

(iv) Hourly average NO_X emission rate from combustion of oil (lb/mmBtu);

(v) Heat input rate of oil (mmBtu/hr, rounded to the nearest tenth); and

(vi) Fuel usage time for combustion of oil during the hour, rounded to the nearest 15 min.

(2) For each hour when the unit is combusting gaseous fuel,

(i) Date and hour;

(ii) Hourly average fuel flow rate of gaseous fuel (100 scfh) (flag value if derived from missing data procedures);

(iii) Gross calorific value (heat content) of gaseous fuel, used to determine heat input (Btu/scf) (flag value if derived from missing data procedures);

(iv) Hourly average NO_X emission rate from combustion of gaseous fuel (lb/mmBtu, rounded to nearest hundredth);

(v) Heat input rate from gaseous fuel (mmBtu/hr, rounded to the nearest tenth); and

(vi) Fuel usage time for combustion of gaseous fuel during the hour, rounded to the nearest 15 min.

(3) For each hour when the unit combusts any fuel:

(i) Date and hour;

(ii) Total heat input from all fuels (mmBtu, rounded to the nearest tenth);

(iii) Hourly average NO_X emission rate for the unit for all fuels;

(iv) For stationary gas turbines and diesel or dual-fuel reciprocating engines, hourly averages of operating parameters under section 2.3 of appendix E (flag if value is outside of manufacturer's recommended range);

(v) For boilers, hourly average boiler O_2 reading (percent, rounded to the nearest tenth) (flag if value exceeds by more than 2 percentage points the O_2 level recorded at the same heat input during the previous NO_X emission rate test).

(4) For each fuel sample:

(i) Date of sampling;

(ii) Gross calorific value (heat content) (Btu/lb for oil, Btu/scf for gaseous fuel); and

(iii) Density or specific gravity, if required to convert volume to mass.

(e) *Specific* SO_2 emission record provisions during the combustion of gaseous fuel.

(1) If SO_2 emissions are determined in accordance with the provisions in § 75.11(e)(2) during hours in which only natural gas (or gaseous fuel with a sulfur content no greater than natural gas) is combusted in a unit with an SO_2

continuous emission monitoring system, the owner or operator shall record the information in paragraph (c)(3) of this section in lieu of the information in §§75.54 (c)(1) and (c)(3), for those hours.

(2) The provisions of this paragraph apply to a unit which, in accordance with the provisions of §75.11(e)(3) uses an SO_2 continuous emission monitoring system to determine SO_2 emissions during hours in which only natural gas or gaseous fuel with a sulfur content no greater than natural gas is combusted in the unit. If the unit sometimes burns only natural gas (or gaseous fuel with a sulfur content no greater than natural gas) as a primary and/or backup fuel, and at other times combusts higher-sulfur fuels such as coal or oil as primary and/or backup fuel(s), then the owner or operator shall keep records on-site, suitable for inspection, of the type(s) of fuel(s) burned during each period of missing SO_2 data, and the number of hours that each type of fuel was combusted in the unit during each missing data period. This recordkeeping requirement does not apply to an affected unit that burns natural gas (or gaseous fuel with a sulfur content no greater than natural gas) exclusively, nor does it apply to a unit that burns such gaseous fuel(s) only during unit startup.

(f) The owner or operator shall meet the requirements of this section on or after January 1, 1996.

[60 FR 26535, 26568, May 17, 1995, as amended at 61 FR 59161, Nov. 20, 1996]

§75.56 Certification, quality assurance and quality control record provisions.

(a) *Continuous emission or opacity monitoring systems.* The owner or operator shall record the applicable information in this section for each certified monitor or certified monitoring system (including certified backup monitors) measuring and recording emissions or flow from an affected unit.

(1) For each SO_2 or NO_X pollutant concentration monitor, flow monitor, CO_2 monitor, or diluent gas monitor, the owner or operator shall record the following for all daily and 7-day calibration error tests, including any follow-up tests after corrective action:

(i) Component/system identification code;

(ii) Instrument span;

(iii) Date and hour;

(iv) Reference value, (i.e., calibration gas concentration or reference signal value, in ppm or other appropriate units);

(v) Observed value (monitor response during calibration, in ppm or other appropriate units);

(vi) Percent calibration error (rounded to nearest tenth of a percent); and

(vii) For 7-day calibration tests for certification or recertification, a certification from the cylinder gas vendor or CEMS vendor, that calibration gas as defined in §72.2 and appendix A of this part, were used to conduct calibration error testing; and

(viii) Description of any adjustments, corrective actions, or maintenance following test.

(2) For each flow monitor, the owner or operator shall record the following for all daily interference checks, including any follow-up tests after corrective action:

(i) Code indicating whether monitor passes or fails the interference check; and

(ii) Description of any adjustments, corrective actions, or maintenance following test.

(3) For each SO_2 or NO_X pollutant concentration monitor, CO_2 monitor, or diluent gas monitor, the owner or operator shall record the following for the initial and all subsequent linearity check(s), including any follow-up tests after corrective action:

(i) Component/system identification code;

(ii) Instrument span;

(iii) Date and hour;

(iv) Reference value (i.e., reference gas concentration, in ppm or other appropriate units);

(v) Observed value (average monitor response at each reference gas concentration, in ppm or other appropriate units);

(vi) Percent error at each of three reference gas concentrations (rounded to nearest tenth of a percent); and

(vii) Description of any adjustments, corrective action, or maintenance following test.

(4) For each flow monitor, where applicable, the owner or operator shall record the following for all quarterly leak checks, including any follow-up tests after corrective action:

(i) Code indicating whether monitor passes or fails the quarterly leak check; and

(ii) Description of any adjustments, corrective actions, or maintenance following test.

(5) For each SO_2 pollutant concentration monitor, flow monitor, CO_2 pollutant concentration monitor; NO_X continuous emission monitoring system, SO_2-diluent continuous emission monitoring system, and approved alternative monitoring system, the owner or operator shall record the following information for the initial and all subsequent relative accuracy tests and test audits:

(i) Date and hour;

(ii) Reference method(s) used;

(iii) Individual test run data from the relative accuracy test audit for the SO_2 concentration monitor, flow monitor, CO_2 pollutant concentration monitor, NO_X continuous emission monitoring system, SO_2-diluent continuous emission monitoring system, or approved alternative monitoring systems, including:

(A) Date, hour, and minute of beginning of test run,

(B) Date, hour, and minute of end of test run,

(C) Component/system identification code,

(D) Run number,

(E) Run data for monitor;

(F) Run data for reference method; and

(G) Flag value (0 or 1) indicating whether run has been used in calculating relative accuracy and bias values.

(iv) Calculations and tabulated results, as follows:

(A) Arithmetic mean of the monitoring system measurement values, reference method values, and of their differences, as specified in Equation A–7 in appendix A to this part.

(B) Standard deviation, as specified in Equation A–8 in appendix A to this part.

(C) Confidence coefficient, as specified in Equation A–9 in appendix A to this part.

(D) Relative accuracy test results, as specified in Equation A–10 in appendix A to this part. (For the 3-level flow monitor test only, relative accuracy test results should be recorded at each of three gas velocities. Each of these three gas velocities shall be expressed as a total gross unit load, rounded to the nearest MWe or as steam load, rounded to the nearest thousand lb/hr.)

(E) Bias test results as specified in section 7.6.4 in appendix A to this part.

(F) Bias adjustment factor from Equations A–11 and A–12 in appendix A to this part for any monitoring system or component that failed the bias test and 1.0 for any monitoring system or component that passed the bias test. (For flow monitors only, bias adjustment factors should be recorded at each of three gas velocities).

(v) Description of any adjustment, corrective action, or maintenance following test.

(vi) F-factor value(s) used to convert NO_X pollutant concentration and diluent gas (O_2 or CO_2) concentration measurements into NO_X emission rates (in lb/mmBtu), heat input or CO_2 emissions.

(6) [Reserved]

(7) Results of all trial runs and certification tests and quality assurance activities and measurements (including all reference method field test sheets, charts, records of combined system responses, laboratory analyses, and example calculations) necessary to substantiate compliance with all relevant appendices in this part. This information shall include, but shall not be limited to, the following reference method data:

(i) For each run of each test using Method 2 in appendix A of part 60 of this chapter to determine volumetric flow rate:

(A) Pitot tube coefficient;

(B) Date of pitot tube calibration;

(C) Average square root of velocity head of stack gas (inches of water) for the run;

(D) Average absolute stack gas temperature, °R;

(E) Barometric pressure at test port, inches of mercury;

(F) Stack static pressure, inches of H_2O;

(G) Absolute stack gas pressure, inches of mercury;

(H) Moisture content of stack gas, percent;

(I) Molecular weight of stack gas, wet basis (lb/lb-mole);

(J) Number of reference method measurements during the run; and

(K) Total volumetric flowrate (scfh, wet basis).

(ii) For each test using Method 2 in appendix A of part 60 of this chapter to determine volumetric flow rate:

(A) Information indicating whether or not the location meets requirements of Method 1 in appendix A of part 60 of this chapter;

(B) Information indicating whether or not the equipment passed the leak check after every run included in the relative accuracy test;

(C) Stack inside diameter at test port (ft);

(D) Duct side height and width at test port (ft);

(E) Stack or duct cross-sectional area at test port (ft^2); and

(F) Designation as to the load level of the test.

(iii) For each run of each test using Method 6C, 7E, or 3A in appendix A of part 60 of this chapter to determine SO_2, NO_X, CO_2, or O_2 concentration:

(A) Run start date;

(B) Run start time;

(C) Run end date;

(D) Run end time;

(E) Span of reference method analyzer;

(F) Reference gas concentration (low, mid-, and high gas levels);

(G) Initial and final analyzer calibration response (low, mid- and high gas levels);

(H) Analyzer calibration error (low, mid-, and high gas levels);

(I) Pre-test and post-test analyzer bias (zero and upscale gas levels);

(J) Calibration drift and zero drift of analyzer;

(K) Indication as to which data are from a pretest and which are from a posttest;

(L) Calibration gas level (zero, mid-level, or high); and

(M) Moisture content of stack gas, in percent, if needed to convert to moisture basis of CEMS being tested.

(iv) For each test using Method 6C, 7E, or 3A in appendix A of part 60 of this chapter to determine SO_2, NO_X CO_2, or O_2 concentration:

(A) Pollutant being measured;

(B) Test number;

(C) Date of interference test;

(D) Results of interference test;

(E) Date of NO_2 to NO conversion test (Method 7E only);

(F) Results of NO_2 to NO conversion test (Method 7E only).

(v) For each calibration gas cylinder used to test using Method 6C, 7E, or 3A in appendix A of part 60 of this chapter to determine SO_2, NO_X, CO_2, or O_2 concentration:

(A) Cylinder gas vendor name from certification;

(B) Cylinder number;

(C) Cylinder expiration date;

(D) Pollutant(s) in cylinder; and

(E) Cylinder gas concentration(s).

(b) *Excepted monitoring systems for gas-fired and oil-fired units.* The owner or operator shall record the applicable information in this section for each excepted monitoring system following the requirements of appendix D of this part or appendix E of this part for determining and recording emissions from an affected unit.

(1) For each oil-fired unit or gas-fired unit using the optional procedures of appendix D of this part for determining SO_2 mass emissions and heat input or the optional procedures of appendix E of this part for determining NO_X emission rate, for certification and quality assurance testing of fuel flowmeters:

(i) Date of test,

(ii) Upper range value of the fuel flowmeter,

(iii) Flowmeter measurements during accuracy test,

(iv) Reference flow rates during accuracy test,

(v) Average flowmeter accuracy as a percent of upper range value,

(vi) Fuel flow rate level (low, mid-level, or high); and

(vii) Description of fuel flowmeter calibration specification or procedure (in the certification application, or periodically if a different method is used for annual quality assurance testing).

(2) For gas-fired peaking units or oil-fired peaking units using the optional procedures of appendix E of this part,

for each initial performance, periodic, or quality assurance/quality control-related test:

(i) For each run of emissions data;

(A) Run start date and time;

(B) Run end date and time;

(C) Fuel flow (lb/hr, gal/hr, scf/hr, bbl/hr, or m^3/hr);

(D) Gross calorific value (heat content) of fuel (Btu/lb or Btu/scf);

(E) Density of fuel (if needed to convert mass to volume);

(F) Total heat input during the run (mmBtu);

(G) Hourly heat input rate for run (mmBtu/hr);

(H) Response time of the O_2 and NO_X reference method analyzers;

(I) NO_X concentration (ppm);

(J) O_2 concentration (percent O_2);

(K) NO_X emission rate (lb/mmBtu); and

(L) Fuel or fuel combination (by heat input fraction) combusted.

(ii) For each unit load and heat input;

(A) Average NO_X emission rate (lb/mmBtu);

(B) F-factor used in calculations;

(C) Average heat input rate (mmBtu/hr);

(D) Unit operating parametric data related to NO_X formation for that unit type (e.g., excess O_2 level, water/fuel ratio); and

(E) Fuel or fuel combination (by heat input fraction) combusted.

(iii) For each test report;

(A) Graph of NO_X emission rate against heat input rate;

(B) Results of the tests for verification of the accuracy of emissions calculations and missing data procedures performed by the automated data acquisition and handling system, and the calculations used to produce NO_X emission rate data at different heat input conditions; and

(C) Results of all certification tests and quality assurance activities and measurements (including reference method field test sheets, charts, laboratory analyses, example calculations, or other data as appropriate), necessary to substantiate compliance with the requirements of appendix E of this part.

(c) For units with add-on SO_2 and NO_X emission controls following the provisions of §75.34(a)(1) or (a)(2), the owner or operator shall keep the following records on-site in the quality assurance/quality control plan required by section 1 in appendix B of this part:

(1) A list of operating parameters for the add-on emission controls, including parameters in §75.55 (b), appropriate to the particular installation of add-on emission controls; and

(2) The range of each operating parameter in the list that indicates the add-on emission controls are properly operating.

(d) The owner or operator shall meet the requirements of paragraphs (a) and (b) of this section on and after January 1, 1996. The owner or operator shall meet the requirements of paragraph (c) of this section on and after January 1, 1998.

[60 FR 26536, 26568, May 17, 1995, as amended at 61 FR 59161, Nov. 20, 1996]

Subpart G—Reporting Requirements

§75.60 General provisions.

(a) The designated representative for any affected unit subject to the requirements of this part shall comply with all reporting requirements in this section and with the signatory requirements of §72.21 of this chapter for all submissions.

(b) *Submissions.* The designated representative shall submit all reports and petitions (except as provided in §75.61) as follows:

(1) All initial certification or recertification testing notifications, initial certification or recertification applications, monitoring plans, petitions for alternative monitoring systems, notifications, electronic quarterly reports, and other communications required by this subpart shall be submitted to the Administrator.

(2) Copies of initial certification or recertification testing notifications, certification or recertification applications and monitoring plans shall be submitted to the appropriate Regional office of the U.S. Environmental Protection Agency and appropriate State or local air pollution control agency.

(c) *Confidentiality of data.* The following provisions shall govern the confidentiality of information submitted under this part.

(1) All emission data reported in quarterly reports under § 75.64 shall remain public information.

(2) For information submitted under this part other than emission data submitted in quarterly reports, the designated representative must assert a claim of confidentiality at the time of submission for any information he or she wishes to have treated as confidential business information (CBI) under subpart B of part 2 of this chapter. Failure to assert a claim of confidentiality at the time of submission may result in disclosure of the information by EPA without further notice to the designated representative.

(3) Any claim of confidentiality for information submitted in quarterly reports under § 75.64 must include substantiation of the claim. Failure to provide substantiation may result in disclosure of the information by EPA without further notice.

(4) As provided under subpart B of part 2 of this chapter, EPA may review information submitted to determine whether it is entitled to confidential treatment even when confidentiality claims are initially received. The EPA will contact the designated representative as part of such a review process.

[58 FR 3701, Jan. 11, 1993, as amended at 60 FR 26538, May 17, 1995]

§ 75.61 Notifications.

(a) *Submission.* The designated representative for an affected unit (or owner or operator, as specified) shall submit notice to the Administrator, to the appropriate EPA Regional Office, and to the applicable State air pollution control agency for the following purposes, as required by this part.

(1) *Initial certification and recertification test notifications.* The owner or operator or designated representative for an affected unit shall submit written notification of initial certification tests, recertification tests, and revised test dates as specified in § 75.20 for continuous emission monitoring systems, for alternative monitoring systems under subpart E of this part, or for excepted monitoring systems under appendix E of this part, except as provided in paragraph (a)(4) of this section and except for testing only of the data acquisition and handling system.

(i) *Notification of initial certification testing.* Initial certification test notifications shall be submitted not later than 45 days prior to the first scheduled day of initial certification testing. Testing may be performed on a date other than that already provided in a notice under this subparagraph as long as notice of the new date is provided either in writing or by telephone or other means at least 7 days prior to the original scheduled test date or the revised test date, whichever is earlier.

(ii) *Notification of certification retesting and recertification testing.* For retesting following a loss of certification under § 75.20(a)(5) or for recertification under § 75.20(b), notice of testing shall be submitted either in writing or by telephone at least 7 days prior to the first scheduled day of testing; except that in emergency situations when testing is required following an uncontrollable failure of equipment that results in lost data, notice shall be sufficient if provided within 2 business days following the date when testing is scheduled. Testing may be performed on a date other than that already provided in a notice under this subparagraph as long as notice of the new date is provided by telephone or other means at least 2 business days prior to the original scheduled test date or the revised test date, whichever is earlier.

(iii) *Repeat of testing without notice.* Notwithstanding the above notice requirements, the owner or operator may elect to repeat a certification test immediately, without advance notification, whenever the owner or operator has determined during the certification testing that a test was failed or that a second test is necessary in order to attain a reduced relative accuracy test frequency.

(2) *New unit, newly affected unit, new stack, or new flue gas desulfurization system operation notification.* The designated representative for an affected unit shall submit written notification: For a new unit or a newly affected unit, of the planned date when a new unit or newly affected unit will commence commercial operation or, for

new stack or flue gas desulfurization system, of the planned date when a new stack or flue gas desulfurization system will be completed and emissions will first exit to the atmosphere.

(i) Notification of the planned date shall be submitted not later than 45 days prior to the date the unit commences commercial operation, or not later than 45 days prior to the date when a new stack or flue gas desulfurization system exhausts emissions to the atmosphere.

(ii) If the date when the unit commences commercial operation or the date when the new stack or flue gas desulfurization system exhausts emissions to the atmosphere, whichever is applicable, changes from the planned date, a notification of the actual date shall be submitted not later than 7 days following: The date the unit commences commercial operation or, the date when a new stack or flue gas desulfurization system exhausts emissions to the atmosphere.

(3) *Unit shutdown and recommencement of commercial operation.* The designated representative for an affected unit that will be shutdown on the relevant compliance date in § 75.4(a) and that is relying on the provisions in § 75.4(d) to postpone certification testing shall submit notification of unit shutdown and recommencement of commercial operation as follows:

(i) For planned unit shutdowns, written notification of the planned shutdown date and planned date of recommencement of commercial operation shall be submitted 45 calendar days prior to the deadline in § 75.4(a). For unit shutdowns that are not planned 45 days prior to the deadline in § 75.4(a), written notification of the planned shutdown date and planned date of recommencement of commercial operation shall be submitted no later than 7 days after the date the owner or operator is able to schedule the shutdown date and date of recommencement of commercial operation. If the actual shutdown date or the actual date of recommencement of commercial operation differs from the planned date, written notice of the actual date shall be submitted no later than 7 days following the actual date of shutdown or of recommencement of commercial operation, as applicable;

(ii) For unplanned unit shutdowns, written notification of actual shutdown date and the expected date of recommencement of commercial operation shall be submitted no later than 7 days after the shutdown. If the actual date of recommencement of commercial operation differs from the expected date, written notice of the actual date shall be submitted no later than 7 days following the actual date of recommencement of commercial operation.

(4) *Use of backup fuels for appendix E procedures.* The designated representative for an affected oil-fired or gas-fired peaking unit that is using an excepted monitoring system under appendix E of this part and that is relying on the provisions in § 75.4(f) to postpone testing of a fuel shall submit written notification of that fact no later than 45 days prior to the deadline in § 75.4(a). The designated representative shall also submit a notification that such a fuel has been combusted no later than 7 days after the first date of combustion of any fuel for which testing has not been performed under appendix E after the deadline in § 75.4(a). Such notice shall also include notice that testing under Appendix E either was performed during the initial combustion or notice of the date that testing will be performed.

(5) *Periodic relative accuracy test audits.* The owner or operator or designated representative of an affected unit shall submit written notice of the date of periodic relative accuracy testing performed under appendix B of this part no later than 21 days prior to the first scheduled day of testing. Testing may be performed on a date other than that already provided in a notice under this subparagraph as long as notice of the new date is provided either in writing or by telephone or other means acceptable to the respective State agency or office of EPA, and the notice is provided as soon as practicable after the new testing date is known, but no later than twenty-four (24) hours in advance of the new date of testing.

(i) Written notification under paragraph (a) (5) of this section may be provided either by mail or by facsimile. In

addition, written notification may be provided by electronic mail, provided that the respective State agency or office of EPA agrees that this is an acceptable form of notification.

(ii) Notwithstanding the notice requirements under paragraph (a)(5) of this section, the owner or operator may elect to repeat a periodic relative accuracy test immediately, without additional notification whenever the owner or operator has determined that a test was failed, or that a second test is necessary in order to attain a reduced relative accuracy test frequency.

(iii) *Waiver from notification requirements.* The Administrator, the appropriate EPA Regional Office, or the applicable State air pollution control agency may issue a waiver from the requirement of paragraph (a)(5) of this section to provide notice to the respective State agency or office of EPA for a unit or a group of units for one or more tests. The Administrator, the appropriate EPA Regional Office, or the applicable State air pollution control agency may also discontinue the waiver and reinstate the requirement of paragraph (a)(5) of this section to provide notice to the respective State agency or office of EPA for future tests for a unit or a group of units. In addition, if an observer from a State agency or EPA is present when a test is rescheduled, the observer may waive all notification requirements under paragraph (a)(5) of this section for the rescheduled test.

(6) *Notice of combustion of emergency fuel under appendix D or E.* The designated representative of an oil-fired unit or gas-fired unit using appendix D or E of this part shall provide notice of the combustion of emergency fuel according to the following:

(i) For an affected oil-fired or gas-fired unit that is using an excepted monitoring system under appendix D or E of this part, where the owner or operator is postponing installation or testing of a fuel flowmeter for emergency fuel under §75.4(g), the designated representative shall submit written notification of postponement of installation or testing no later than 45 days prior to the deadline in §75.4(a). The designated representative shall also submit a notification that emergency fuel has been combusted no later than 7 days after the first date of combustion of the emergency fuel after the deadline in §75.4(a).

(ii) The designated representative of a unit that has received approval of a petition under §75.66 for exemption from one or more of the requirements of appendix E of this part for certification of an excepted monitoring system under appendix E of this part for a unit combusting emergency fuel shall submit written notice of each period of combustion of the emergency fuel with the next quarterly report submitted under §75.64 for each calendar quarter in which emergency fuel is combusted, including notice specifying the exact dates and hours during which the emergency fuel was combusted.

(b) The owner or operator or designated representative shall submit notification of certification tests and recertification tests for continuous opacity monitoring systems, as specified in §75.20(c)(6) to the State or local air pollution control agency.

(c) If the Administrator determines that notification substantially similar to that required in this section is required by any other State or local agency, the owner or operator or designated representative may send the Administrator a copy of that notification to satisfy the requirements of this section, provided the ORISPL unit identification number(s) is denoted.

[60 FR 26538, May 17, 1995, as amended at 61 FR 25582, May 22, 1996; 61 FR 59162, Nov. 22, 1996]

§ 75.62 Monitoring plan.

(a) *Submission.* The designated representative for an affected unit shall submit the monitoring plan to the Administrator no later than 45 days prior to the first scheduled certification test, other than testing of a fuel flowmeter or an excepted monitoring system under appendix D of this part. The designated representative shall submit the monitoring plan for a Phase II unit using an excepted monitoring system under appendix D of this part to the Administrator no later than November 15, 1994.

(b) *Contents.* Monitoring plans shall contain the information specified in §75.53 of this part.

(c) *Format.* Each monitoring plan shall be submitted in a format specified by the Administrator, including information in electronic format and on paper.

[58 FR 3701, Jan. 11, 1993, as amended at 60 FR 26539, May 17, 1995]

§75.63 Initial certification or recertification application.

(a) *Submission.* The designated representative for an affected unit or a combustion source seeking to enter the Opt-in Program in accordance with part 74 of this chapter shall submit the application to the Administrator within 45 days after completing all initial certification tests or recertification tests.

(b) *Contents.* Each application for initial certification or recertification shall contain the following information:

(1) A copy of the monitoring plan (or any modifications to the monitoring plan) for the unit, or units, or combustion sources seeking to enter the Opt-in Program in accordance with part 74 of this chapter, if not previously submitted.

(2) The results of the test(s) required by §75.20, including the type of test conducted, testing date, and field data sheets required by §75.52 (or §75.56, no later than January 1, 1996), and including the results of any failed tests that had been repeated pursuant to the requirements in §75.20.

(3) Results of the tests for verification of the accuracy of emissions and volumetric flow calculations performed by the automated data acquisition and handling system, including a summary of equations used to convert component data to units of the standard and to calculate substitute data for missing data periods, including sample calculations.

(c) *Format.* Each certification application shall be submitted in a format to be specified by the Administrator, including test results in electronic format and field data sheets required by §75.52 (or §75.56, no later than January 1, 1996) on paper where the information required under §75.56(a)(7) shall be submitted on paper.

[60 FR 26539, May 17, 1995]

§75.64 Quarterly reports.

(a) *Electronic submission.* The designated representative for an affected unit shall electronically report the data and information in paragraphs (a), (b), and (c) of this section to the Administrator quarterly, beginning with the data from the later of: the last (partial) calendar quarter of 1993 (where the calendar quarter data begins at November 15, 1993); or the calendar quarter corresponding to the relevant deadline for certification in §75.4(a), (b), or (c). For any provisionally-certified monitoring system, some or all of the quarterly data may be invalidated, if the Administrator subsequently issues a notice of disapproval within 120 days of receipt of the complete initial certification application or within 60 days of receipt of the complete recertification application for the monitoring system. Each electronic report must be submitted to the Administrator within 30 days following the end of each calendar quarter and shall include for each affected unit (or group of units using a common stack):

(1) The information and hourly data required in §§75.50 through 75.52 (or §§75.54 through 75.56), no later than the quarterly report due April 30, 1996), excluding:

(i) Descriptions of adjustments, corrective action, and maintenance;

(ii) Information which is incompatible with electronic reporting (e.g., field data sheets, lab analyses, quality control plan);

(iii) Opacity data listed in §75.50(f) or §75.54(f);

(iv) For units with SO_2 or NO_X add-on emission controls that do not elect to use the approved site-specific parametric monitoring procedures for calculation of substitute data, the information in §75.55(b)(3); and

(v) The information recorded under §75.56(a)(7) for the period prior to January 1, 1996.

(2) Tons (rounded to the nearest tenth) of SO_2 emitted during the quarter and cumulative SO_2 emissions for calendar year.

(3) Average NO_x emission rate (lb/mmBtu, rounded to the nearest hundredth) during the quarter and cumulative NO_x emission rate for calendar year.

(4) Tons of CO_2 emitted during quarter and cumulative CO_2 emissions for calendar year.

(5) Total heat input (mmBtu) for quarter and cumulative heat input for calendar year.

(6) If the affected unit is using a qualifying Phase I technology, then the quarterly report shall include the information required in paragraph (e) of this section.

(b) The designated representative shall affirm that the component/system identification codes and formulas in the quarterly electronic reports, submitted to the Administrator pursuant to § 75.53, represent current operating conditions.

(c) *Compliance certification.* The designated representative shall submit a certification in support of each quarterly emissions monitoring report based on reasonable inquiry of those persons with primary responsibility for ensuring that all of the unit's emissions are correctly and fully monitored. The certification shall indicate whether the monitoring data submitted were recorded in accordance with the applicable requirements of this part including the quality control and quality assurance procedures and specifications of this part and its appendices, and any such requirements, procedures and specifications of an applicable excepted or approved alternative monitoring method. In the event of any missing data periods, the certification must describe the measures taken to cure the causes for the missing data periods. For a unit with add-on emission controls, the designated representative shall also include a certification for all hours where data are substituted following the provisions of § 75.34(a)(1), that the add-on emission controls were operating within the range of parameters listed in the monitoring plan, and that the substitute values recorded during the quarter do not systematically underestimate SO_2 or NO_X emissions, pursuant to § 75.34.

(d) *Electronic format.* Each quarterly report shall be submitted in a format to be specified by the Administrator, including both electronic submission of data and paper submission of compliance certifications.

(e) *Phase I qualifying technology reports.* In addition to reporting the information in paragraphs (a), (b), and (c) of this section, the designated representative for an affected unit on which SO_2 emission controls have been installed and operated for the purpose of meeting qualifying Phase I technology requirements pursuant to § 72.42 of this chapter shall also submit reports documenting the measured percent SO_2 emissions removal to the Administrator on a quarterly basis, beginning the first quarter of 1997 and continuing through the fourth quarter of 1999. Each report shall include all measurements and calculations necessary to substantiate that the qualifying technology achieves the overall percentage reduction in SO_2 emissions.

[58 FR 3701, Jan. 11, 1993, as amended at 60 FR 26540, 26569, May 17, 1995]

§ 75.65 Opacity reports.

The owner or operator or designated representative shall report excess emissions of opacity recorded under §§ 75.50(f) or 75.54(f) to the applicable State or local air pollution control agency, in a format specified by the applicable State or local air pollution control agency.

[60 FR 26540, May 17, 1995]

§ 75.66 Petitions to the Administrator.

(a) *General.* The designated representative for an affected unit subject to the requirements of this part may submit petitions to the Administrator. Any petitions shall be submitted in accordance with the requirements of this section. The designated representative shall comply with the signatory requirements of § 72.21 of this chapter for each submission.

(b) *Alternative flow monitoring method petition.* In cases where no location exists for installation of a flow monitor in either the stack or the ducts serving an affected unit that satisfies the minimum physical siting criteria in appendix A of this part or where installation of a flow monitor in either the stack or duct is demonstrated to the satisfaction of the Administrator to be technically infeasible, the designated representative for the affected unit may

petition the Administrator for an alternative method for monitoring volumetric flow. The petition shall, at a minimum, contain the following information:

(1) Identification of the affected unit(s);

(2) Description of why the minimum siting criteria cannot be met within the existing ductwork or stack(s). This description shall include diagrams of the existing ductwork or stack, as well as documentation of any attempts to locate a flow monitor; and

(3) Description of proposed alternative method for monitoring flow.

(c) *Alternative to standards incorporated by reference.* The designated representative for an affected unit may apply to the Administrator for an alternative to any standard incorporated by reference and prescribed in this part. The designated representative shall include the following information in an application:

(1) A description of why the prescribed standard is not being used;

(2) A description and diagram(s) of any equipment and procedures used in the proposed alternative;

(3) Information demonstrating that the proposed alternative produces data acceptable for use in the Acid Rain Program, including accuracy and precision statements, NIST traceability certificates or protocols, or other supporting data, as applicable to the proposed alternative.

(d) *Alternative monitoring system petitions.* The designated representative for an affected unit may submit a petition to the Administrator for approval and certification of an alternative monitoring system or component according to the procedure in subpart E of this part. Each petition shall contain the information and data specified in subpart E, including the information specified in § 75.48, in a format to be specified by the Administrator.

(e) *Parametric monitoring procedure petitions.* The designated representative for an affected unit may submit a petition to the Administrator, where each petition shall contain the information specified in § 75.51(b) (or § 75.55(b), no later than January 1, 1996) for use of a parametric monitoring method. The Administrator will either:

(1) Publish a notice in the FEDERAL REGISTER indicating receipt of a parametric monitoring procedure petition;, or

(2) Notify interested parties of receipt of a parametric monitoring petition.

(f) *Missing data petitions for units with add-on emission controls.* The designated representative for an affected unit may submit a petition to the Administrator for the use of the maximum controlled emission rate, which the Administrator will approve if the petition adequately demonstrates that all the requirements in § 75.34(a)(2) are satisfied. Each petition shall contain the information listed below for the time period (or data gap) during which the affected unit experienced the monitor outage that would otherwise result in the substitution of an uncontrolled maximum value under the standard missing data procedures contained in subpart D of this part:

(1) Data demonstrating that the affected unit's monitor data availability for the time period under petition was less than 90.0 percent;

(2) Data demonstrating that the add-on emission controls were operating properly during the time period under petition (i.e., operating parameters were within the ranges specified for proper operation of the add-on emission controls in the quality assurance/quality control program for the unit);

(3) A list of the average hourly values for the previous 720 quality-assured monitor operating hours, highlighting both the maximum recorded value and the value corresponding to the maximum controlled emission rate; and

(4) An explanation and information on operation of the add-on emission controls demonstrating that the selected historical SO_2 concentration or NO_X emission rate does not underestimate the SO_2 concentration or NO_X emission rate during the missing data period.

(g) *Petitions for emissions or heat input apportionments.* The designated representative of an affected unit shall provide information to describe a method for emissions or heat input apportionment under §§ 75.13, 75.16, 75.17, or appendix D of this part. This petition may be submitted as part of the

monitoring plan. Such a petition shall contain, at a minimum, the following information:

(1) A description of the units, including their fuel type, their boiler type, and their categorization as Phase I units, substitution units, compensating units, Phase II units, new units, or non-affected units;

(2) A formula describing how the emissions or heat input are to be apportioned to which units;

(3) A description of the methods and parameters used to apportion the emissions or heat input; and

(4) Any other information necessary to demonstrate that the apportionment method accurately measures emissions or heat input and does not underestimate emissions or heat input from affected units.

(h) *Partial recertification petition.* The designated representative of an affected unit may provide information and petition the Administrator to specify which of the certification tests required by § 75.20 apply for partial recertification of the affected unit. Such a petition shall include the following information:

(1) Identification of the monitoring system(s) being changed;

(2) A description of the changes being made to the system;

(3) An explanation of why the changes are being made; and

(4) A description of the possible effect upon the monitoring system's ability to measure, record, and report emissions.

(i) *Any other petitions to the Administrator under this part.* The designated representative for an affected unit shall include sufficient information for the evaluation of any other petition submitted to the Administrator under this part.

[58 FR 3701, Jan. 11, 1993,as amended at 60 FR 26540, 26569, May 17, 1995; 61 FR 59162, Nov. 20, 1996]

§ 75.67 Retired units petitions.

(a) For units that will be permanently retired prior to January 1, 1995, if the designated representative submits a complete petition, as required in § 72.8 of this chapter, to the Administrator prior to the deadline in § 75.4 by which the continuous emission or opacity monitoring systems must complete the required certification tests, the Administrator will issue an exemption from the requirements of this part, including the requirement to install and certify continuous emission monitoring systems.

(b) For combustion sources seeking to enter the Opt-in Program in accordance with part 74 of this chapter that will be permanently retired and governed upon entry into the Opt-in Program by a thermal energy plan in accordance with § 74.47 of this chapter, an exemption from the requirements of this part, including the requirement to install and certify a continuous emissions monitoring system, may be obtained from the Administrator if the designated representative submits to the Administrator a petition for such an exemption prior to the deadline in § 75.4 by which the continuous emission or opacity monitoring systems must complete the required certification tests.

[60 FR 17131, Apr. 4, 1995, as amended at 60 FR 26541, May 17, 1995]

APPENDIX A TO PART 75—SPECIFICATIONS AND TEST PROCEDURES

1. INSTALLATION AND MEASUREMENT LOCATION

1.1 Pollutant Concentration and CO_2 or O_2 Monitors

Following the procedures in section 3.1 of Performance Specification 2 in Appendix B to part 60 of this chapter, install the pollutant concentration monitor or monitoring system at a location where the pollutant concentration and emission rate measurements are directly representative of the total emissions from the affected unit. Select a representative measurement point or path for the monitor probe(s) (or for the path from the transmitter to the receiver) such that the SO_2 pollutant concentration monitor or NO_x continuous emission monitoring system (NO_x pollutant concentration monitor and diluent gas monitor) will pass the relative accuracy test (see section 6 of this Appendix).

It is recommended that monitor measurements be made at locations where the exhaust gas temperature is above the dewpoint temperature. If the cause of failure to meet the relative accuracy tests is determined to be the measurement location, relocate the monitor probe(s).

1.1.1 POINT POLLUTANT CONCENTRATION AND CO_2 OR O_2 MONITORS

Locate the measurement point (1) within the centroidal area of the stack or duct cross section, or (2) no less than 1.0 meter from the stack or duct wall.

1.1.2 PATH POLLUTANT CONCENTRATION AND CO_2 OR O_2 GAS MONITORS

Locate the measurement path (1) totally within the inner area bounded by a line 1.0 meter from the stack or duct wall, or (2) such that at least 70.0 percent of the path is within the inner 50.0 percent of the stack or duct cross-sectional area, or (3) such that the path is centrally located within any part of the centroidal area.

1.2 Flow Monitors

Install the flow monitor in a location that provides representative volumetric flow over all operating conditions. Such a location is one that provides an average velocity of the flue gas flow over the stack or duct cross section, provides a representative SO_2 emission rate (in lb/hr), and is representative of the pollutant concentration monitor location. Where the moisture content of the flue gas affects volumetric flow measurements, use the procedures in both Reference Methods 1 and 4 of Appendix A to part 60 of this chapter to establish a proper location for the flow monitor. The EPA recommends (but does not require) performing a flow profile study following the procedures in 40 CFR part 60, appendix A, Method, 1, section 2.5 or 2.4 for each of the three operating or load levels indicated in section 6.5.2 of this appendix to determine the acceptability of the potential flow monitor location and to determine the number and location of flow sampling points required to obtain a representative flow value. The procedure in 40 CFR part 60, Appendix A, Test Method 1, section 2.5 may be used even if the flow measurement location is greater than or equal to 2 equivalent stack or duct diameters downstream or greater than or equal to ½ duct diameter upstream from a flow disturbance. If a flow profile study shows that cyclonic (or swirling) or stratified flow conditions exist at the potential flow monitor location that are likely to prevent the monitor from meeting the performance specifications of this part, then EPA recommends either (1) selecting another location where there is no cyclonic (or swirling) or stratified flow condition, or (2) eliminating the cyclonic (or swirling) or stratified flow condition by straightening the flow, e.g., by installing straightening vanes. EPA also recommends selecting flow monitor locations to minimize the effects of condensation, coating, erosion, or other conditions that could adversely affect flow monitor performance.

1.2.1 ACCEPTABILITY OF MONITOR LOCATION

The installation of a flow monitor is acceptable if either (1) the location satisfies the minimum siting criteria of Method 1 in Appendix A to part 60 of this chapter (i.e., the location is greater than or equal to eight stack or duct diameters downstream and two diameters upstream from a flow disturbance; or, if necessary, two stack or duct diameters downstream and one-half stack or duct diameter upstream from a flow disturbance), or (2) the results of a flow profile study, if performed, are acceptable (i.e., there are no cyclonic (or swirling) or stratified flow conditions), and the flow monitor also satisfies the performance specifications of this part. If the flow monitor is installed in a location that does not satisfy these physical criteria, but nevertheless the monitor achieves the performance specifications of this part, then the location is acceptable, notwithstanding the requirements of this section.

1.2.2 ALTERNATIVE MONITORING LOCATION

Whenever the designated representative successfully demonstrates that modifications to the exhaust duct or stack (such as installation of straightening vanes, modifications of ductwork, and the like) are necessary for the flow monitor to meet the performance specifications, the Administrator may approve an interim alternative flow monitoring methodology and an extension to the required certification date for the flow monitor.

Whenever the owner or operator successfully demonstrates that modifications to the exhaust duct or stack (such as installation of straightening vanes, modifications of ductwork, and the like) are necessary for the flow monitor to meet the performance specifications, the Administrator may approve an interim alternative flow monitoring methodology and an extension to the required certification date for the flow monitor.

Where no location exists that satisfies the physical siting criteria in section 1.2.1, where the results of flow profile studies performed at two or more alternative flow monitor locations are unacceptable, or where installation of a flow monitor in either the stack or the ducts is demonstrated to be technically infeasible, the owner or operator may petition the Administrator for an alternative method for monitoring flow.

2. EQUIPMENT SPECIFICATIONS

2.1 Instrument Span

In implementing sections 2.1.1 through 2.1.4 of this appendix, to the extent practicable, measure at a range such that the majority of readings obtained during normal operation are between 25 and 75 percent of full-scale range of the instrument.

2.1.1 SO_2 POLLUTANT CONCENTRATION MONITORS

Determine, as indicated below, the span value for an SO_2 pollutant concentration monitor so that all expected concentrations can be accurately measured and recorded.

2.1.1.1 MAXIMUM POTENTIAL CONCENTRATION

The monitor must be capable of accurately measuring up to 125 percent of the maximum potential concentration (MPC) as calculated using Equation A–1a or A–1b. Calculate the maximum potential concentration by using Equation A–1a or A–1b and the maximum percent sulfur and minimum gross calorific value (GCV) for the highest sulfur fuel to be burned, using daily fuel sample data if they are available. If an SO_2 CEMS is already installed, the owner or operator may determine an MPC based upon the maximum concentration observed during the previous 30 unit operating days when using the type of fuel to be burned. For initial certification, base the maximum percent sulfur and minimum GCV on the results of all available fuel sampling and analysis data from the previous 12 months (where such data exists). If the unit has not been operated during that period, use the maximum sulfur content and minimum GCV from the fuel contract for fuel that will be combusted by the unit. Whenever the fuel supply changes such that these maximum sulfur and minimum GCV values may change significantly, base the maximum percent sulfur and minimum GCV on the new fuel with the highest sulfur content. Use the one of the two following methods that results in a higher MPC: (1) results of samples representative of the new fuel supply, or (2) maximum sulfur and minimum GCV from the fuel contract for fuel that will be combusted by the unit. Whenever performing fuel sampling to determine the MPC, use ASTM Methods ASTM D3177–89, ''Standard Test Methods for Total Sulfur in the Analysis Sample of Coal and Coke,'' ASTM D4239–85, ''Standard Test Methods for Sulfur in the Analysis Sample of Coal and Coke Using High Temperature Tube Furnace Combustion Methods,'' ASTM D4294–90, ''Standard Test Method for Sulfur in Petroleum Products by Energy-Dispersive X-Ray Fluorescence Spectroscopy,'' ASTM D1552–90, ''Standard Test Method for Sulfur in Petroleum Products (High Temperature Method),'' ASTM D129–91, ''Standard Test Method for Sulfur in Petroleum Products (General Bomb Method),'' or ASTM D2622–92, ''Standard Test Method for Sulfur in Petroleum Products by X-Ray Spectrometry'' for sulfur content of solid or liquid fuels, or ASTM D3176–89, ''Standard Practice for Ultimate Analysis of Coal and Coke'', ASTM D240–87 (Reapproved 1991), ''Standard Test Method for Heat of Combustion of Liquid Hydrocarbon Fuels by Bomb Calorimeter'', or ASTM D2015–91, ''Standard Test Method for Gross Calorific Value of Coal and Coke by the Adiabatic Bomb Calorimeter'' for GCV (incorporated by reference under §75.6). Multiply the maximum potential concentration by 125 percent, and round up the resultant concentration to the nearest multiple of 100 ppm to determine the span value. The span value will be used to determine the concentrations of the calibration gases. Include the full-scale range setting and calculations of the span and MPC in the monitoring plan for the unit. Select the full-scale range of the instrument to be consistent with section 2.1 of this appendix, and to be greater than or equal to the span value. This selected monitor range with a span rounded up from 125 percent of the maximum potential concentration will be the ''high-scale'' of the SO_2 pollutant concentration monitor.

$$MPC = 11.32 \times 10^6 \left(\frac{\%S}{GCV}\right)\left(\frac{20.9 - \%O_{2w}}{20.9}\right) \qquad \text{(Eq. A–1a)}$$

or

$$MPC = 66.93 \times 10^6 \left(\frac{\%S}{GCV}\right)\left(\frac{\%CO_{2w}}{100}\right) \qquad \text{(Eq. A–1b)}$$

Where,

MPC=Maximum potential concentration (ppm, wet basis). (To convert to dry basis, divide the MPC by 0.9.)

%S=Maximum sulfur content of fuel to be fired, wet basis, weight percent, as determined by ASTM D3177–89, ASTM D4239–85, ASTM D4294–90, ASTM D1552–90, ASTM D129–91, or ASTM D2622–92 for solid or liquid fuels (incorporated by reference under §75.6).

GCV=Minimum gross calorific value of the fuel lot consistent with the sulfur analysis (Btu/lb), as determined using ASTM D3176–89, ASTM D240–87 (Reapproved 1991), or ASTM D2015–91 (incorporated by reference under §75.6).

$\%O_{2w}$=Minimum oxygen concentration, percent wet basis, under normal operating conditions.

$\%CO_{2w}$=Maximum carbon dioxide concentration, percent wet basis, under normal operating conditions.

11.32×10^6=Oxygen-based conversion factor in (Btu/lb)(ppm)/%.

6.93×10^6=Carbon dioxide-based conversion factor in (Btu/lb)(ppm)/%

NOTE: All percent values to be inserted in the equations of this section are to be expressed as a percentage, not a fractional value, e.g., 3, not .03.

2.1.1.2 Maximum Expected Concentration

If the majority of SO_2 concentration values are predicted to be less than 25 percent of the full-scale range of the instrument selected under section 2.1.1.1 of this appendix, (e.g., where an SO_2 add-on emission control is used or where fuel with different sulfur contents are blended), use an additional (lower) measurement range. For this second range, use Equation A–2 to calculate the maximum expected concentration (MEC) for units with emission controls. For units blending fuels, calculate the MEC using a best estimate of the highest sulfur content and lowest gross calorific value expected for the blend and inserting these values into Equation A–1. If an SO_2 CEMS is already installed, the owner or operator may calculate an MEC based upon the maximum concentration measured by the CEMS over a thirty-day period, provided that there have been no full-scale exceedances since the range was last selected. Multiply the maximum expected concentration by 125 percent, and round up the resultant concentration to the nearest multiple of 10 ppm to determine the span value for the additional (lower) range. The span value of this additional range will also be used to determine concentrations of the calibration gases for this additional range. Report the full-scale range setting and calculations of the MEC and span in the monitoring plan for the unit. Select the full-scale range of the instrument of this additional (lower) range to be consistent with section 2.1 of this appendix, and to be greater than or equal to the lower range span value. This selected monitor range with a span rounded up from 125 percent of the MEC will be the ''low-scale'' of the SO_2 pollutant concentration monitor. Units using a low-scale range must also be capable of accurately measuring the anticipated concentrations up to and including 125 percent of the maximum potential concentration. If an existing State, local, or Federal requirement for span of an SO_2 pollutant concentration monitor requires a span other than that required in this section, but less than that required for the high-scale by this appendix, the State, local or Federal span value may be approved, where a satisfactory explanation is included in the monitoring plan.

$$MEC=MPC[(100-RE)/100] \quad \text{(Eq. A–2)}$$

Where:

MEC=Maximum expected concentration (ppm).

MPC=Maximum potential concentration (ppm), as determined by Eq. A–1a or A–1b.

RE = Expected average design removal efficiency of control equipment (%).

2.1.1.3 Auto-ranging Monitors

For monitors that can continuously and automatically adjust their range of measurement, the monitor must be capable at any time of accurately measuring up to 125 percent of the maximum potential concentration, as calculated using Equation A–1a or A–1b. Define the span value(s) for an auto-ranging monitor as 125 percent of the maximum potential concentration and 125 percent of the maximum expected concentration if a second span is determined to be necessary under section 2.1.1.2 of this appendix. Determine concentrations of the calibration gases based upon the span value(s).

2.1.1.4 ADJUSTMENT OF SPAN

Wherever the SO_2 concentration exceeds the maximum potential concentration but does not exceed the full-scale range during more than one clock-hour and the monitor can measure and record the SO_2 concentration accurately, it may be reported for use in the Acid Rain Program. If the concentration exceeds the monitor's ability to measure and record values accurately during a clock hour, and the full-scale exceedance is not during an out-of-control period, report the full-scale value as the SO_2 concentration for that clock hour. If full-scale exceedances occur during more than one clock hour since the last adjustment of the full-scale range setting, adjust the full-scale range setting to prevent future exceedances.

Whenever the fuel supply or emission controls change such that the maximum expected or potential concentration may change significantly, adjust the span and range setting to assure the continued proper operation of the monitoring system. Determine the adjusted span using the procedures in sections 2.1.1.1 or 2.1.1.2 of this appendix. Select the full scale range of the instrument to be greater than or equal to the new span value and to be consistent with the guidelines of section 2.1 of this appendix. Record and report the new full-scale range setting, calculations of the span, MPC, and MEC (if

appropriate), and the adjusted span value, in an updated monitoring plan. In addition, record and report the adjusted span as part of the records for the daily calibration error test and linearity check specified by appendix B of this part. Whenever the span value is adjusted, use calibration gas concentrations based on the most recent adjusted span value. Perform a linearity check according to section 6.2 of this appendix whenever making a change to the monitor span or range. Recertification under §75.20(b) is required whenever a significant change in the monitor's range also requires an internal modification to the monitor (e.g., a change of measurement cell length).

2.1.2 NO_X POLLUTANT CONCENTRATION MONITORS

Determine, as indicated below, the span value(s) for the NO_X pollutant concentration monitor so that all expected NO_X concentrations can be determined and recorded accurately including both the maximum expected and potential concentration.

2.1.2.1 MAXIMUM POTENTIAL CONCENTRATION

The monitor must be capable of accurately measuring up to 125 percent of the maximum potential concentration (MPC) as determined below in this section. Use 800 ppm for coal-fired and 400 ppm for oil- or gas-fired units as the maximum potential concentration of NOx, unless a more representative MPC is determined by one of the following methods (If an MPC of 1600 ppm for coal-fired units or 480 ppm for oil- or gas-fired units was previously selected under this part, that value may still be used.): (1) NO_X emission test results, (2) historical CEM data over the previous 30 unit operating days; or (3) specific values based on boiler-type and fuel combusted, listed in Table 2–1 or Table 2–2 if other data under (1) or (2) were not available. Multiply the MPC by 125 percent and round up to the nearest multiple of 100 ppm to determine the span value. The span value will be used to determine the concentrations of the calibration gases.

Report the full-scale range setting, and calculations of the MPC, maximum potential NO_X emission rate, and span in the monitoring plan for the unit. Select the full-scale range of the instrument to be consistent with section 2.1 of this appendix, and to be greater than or equal to the span value. This selected monitor range with a span rounded up from 125 percent of the maximum potential concentration will be the ''high-scale'' of the NO_X pollutant concentration monitor.

If NO_X emission testing is used to determine the maximum potential NO_X concentration, use the following guidelines: Use Method 7E from appendix A of part 60 of this chapter to measure total NO_X concentration. Operate the unit, or group of units sharing a common stack, at the minimum safe and stable load, the normal load, and the maximum load. If the normal load and maximum load are identical, an intermediate level need not be tested. Operate at the highest excess O_2 level expected under normal operating conditions. Make at least three runs with three traverse points of at least 20 minutes duration at each operating condition. Select the highest NO_X concentration from all measured values as the maximum potential concentration for NOx. If historical CEM data are used to determine the MPC, the data must represent various operating conditions, including the minimum safe and stable load, normal load, and maximum load. Calculate the MPC and span using the highest hourly NO_X concentration in ppm. If no test data or historical CEM data are available, use Table 2–1 or Table 2–2 to estimate the maximum potential concentration based upon boiler type and fuel used.

TABLE 2–1.—MAXIMUM POTENTIAL CONCENTRATION FOR NO_X—Coal-Fired Units

Unit type	Maximum potential concentration for NO_X (ppm)
Tangentially-fired dry bottom and fluidized bed	460
Wall-fired dry bottom, turbo-fired dry bottom, stokers	675
Roof-fired (vertically-fired) dry bottom, cell burners, arch-fired	975
Cyclone, wall-fired wet bottom, wet bottom turbo-fired	1200
Others	As approved by the Administrator.

TABLE 2–2.—MAXIMUM POTENTIAL CONCENTRATION FOR NO_X—Gas- And Oil-Fired Units

Unit type	Maximum potential concentration for NO_X (ppm)
Tangentially-fired dry bottom	380
Wall-fired dry bottom	600
Roof-fired (vertically-fired) dry bottom, arch-fired	550
Existing combustion turbine or combined cycle turbine	200
New stationary gas turbine/combustion turbine	50
Others	As approved by the Administrator.

2.1.2.2 MAXIMUM EXPECTED CONCENTRATION

If the majority of NO_X concentrations are expected to be less than 25 percent of the full-scale range of the instrument selected under section 2.1.2.1 of this appendix (e.g., where a NO_X add-on emission control is used) use a ''low-scale'' measurement range. For units with add-on emission controls, determine the maximum expected concentration (MEC) of NO_X using Equation A–2, inserting the maximum potential concentration, as determined using the procedures in section 2.1.2.1 of this appendix. Where Equation A–2 is not appropriate, set the MEC, either (1) by measuring the NO_X concentration using the testing procedures in section 2.1.2.1 of this appendix, or (2) by using historical CEM data over the previous 30 unit operating days. Other methods for determining the MEC may be accepted if they are satisfactorily explained in the monitoring plan. If an existing State, local, or Federal requirement for span of an NO_X pollutant concentration monitor requires a span other than that required in this section, but less than that required for the high scale by this appendix, the State, local, or Federal span value may be approved, where a satisfactory explanation is included in the monitoring plan. Calculate the span for the additional (lower) range by multiplying the maximum expected concentration by 125 percent and by rounding up the resultant concentration to the nearest multiple of 10 ppm. The span value of this additional (lower) range will also be used to determine the concentrations of the calibration gases. Include the full-scale range setting and calculations of the MEC and span in the monitoring plan for the unit. Select the full-scale range of the instrument to be consistent with section 2.1 of this appendix, and to be greater or equal to the lower range span value. This selected monitor range with a span rounded up from 125 percent of the maximum expected concentration is the ''low-scale'' of NO_X pollutant concentration monitors. NO_X pollutant concentration monitors on affected units with NO_X emission controls, or on other units with monitors using a low-scale range, must also be capable of accurately measuring up to 125 percent of the maximum potential concentration. For dual-span NO_X pollutant concentration monitors, determine the concentration of calibration gases based on both span values.

2.1.2.3 AUTO-RANGING MONITORS

For monitors that can continuously and automatically adjust their range of measurement, the monitor must be capable at any time of accurately measuring up to 125 percent of the maximum potential concentration as defined in section 2.1.2.1 of this appendix. Define the span value(s) for an auto-ranging monitor as 125 percent of the maximum potential concentration and 125 percent of the maximum expected concentration if a second span is determined to be necessary under section 2.1.2.2 of this appendix. Determine concentrations of the calibration gases based upon the span value(s).

2.1.2.4 ADJUSTMENT OF SPAN

Wherever the actual NO_X concentration exceeds the maximum potential concentration but does not exceed the full-scale range for more than one clock-hour and the monitor can measure and record the NO_X concentration values accurately, the NO_X concentration values may be reported for use in the Acid Rain Program. If the concentration exceeds the monitor's ability to measure and record values accurately during a clock hour, and the full-scale exceedance is not during an out-of-control period, report the full-scale value as the NO_X concentration for that clock hour. If full-scale exceedances occur during more than one clock hour since the last adjustment of the full-scale range setting, adjust the full-scale range setting to prevent future exceedances.

Whenever the fuel supply, emission controls, or other process parameters change such that the maximum expected concentration or the maximum potential concentration may change significantly, adjust the NO_X pollutant concentration span and monitor range to assure the continued accuracy of the monitoring system. Determine the adjusted span value using the procedures in sections 2.1.2.1 or 2.1.2.2 of this appendix. Select the new full scale range of the instrument to be greater than or equal to the adjusted span value and to be consistent with the guidelines of section 2.1 of this appendix. Record and report the new full-scale range setting, calculations of the span value, MPC, and MEC (if appropriate), maximum potential NO_X emission rate and the adjusted span value in an updated monitoring plan for the unit. In addition, record and report the adjusted span as part of the records for the daily calibration error test and linearity check required by appendix B of this part. Whenever the span value is adjusted, use calibration gas concentrations based on the most recent adjusted span value. Perform a linearity check according to section 6.2 of this appendix whenever making a change to the monitor span or range. Recertification under §75.20(b) is required whenever a significant change is made in the monitor's range that requires an internal modification to the monitor (e.g., a change of measurement cell length).

2.1.3 CO_2 AND O_2 MONITORS

Define the ''high scale'' span value as 20 percent O_2 or 20 percent CO_2. All O_2 and CO_2 analyzers must have ''high-scale'' measurement capability. Select the full-scale range

of the instrument to be consistent with section 2.1 of this appendix, and to be greater than or equal to the span value. If the O_2 or CO_2 concentrations are expected to be consistently low, a ''low scale'' measurement range may be used for increased accuracy, provided that it is consistent with section 2.1 of this appendix. Include a span value for the low-scale range in the monitoring plan. Select the calibration gas concentrations as percentages of the span value.

2.1.4 FLOW MONITORS

Select the full-scale range of the flow monitor so that it is consistent with section 2.1 of this appendix, and can accurately measure all potential volumetric flow rates at the flow monitor installation site. For this purpose, determine the span value of the flow monitor using the following procedure. Calculate the maximum potential velocity (MPV) using Equation A–3a or A–3b or determine the MPV or maximum potential flow rate (MPF) in scfh (wet basis) from velocity traverse testing. If using test values, use the highest velocity measured at or near the maximum unit operating load. Calculate the MPV in units of wet standard fpm. Then, if necessary, convert the MPV to equivalent units of flow rate (e.g., scfh or kscfh) or differential pressure (inches of water), consistent with the measurement units used for the daily calibration error test to calculate the span value. Multiply the MPV (in equivalent units) by 125 percent, and round up the result to no less than 2 significant figures. Report the full-scale range setting, and calculations of the span value, MPV and MPF in the monitoring plan for the unit.

$$MPV = \left(\frac{F_d H_f}{A}\right)\left(\frac{20.9}{20.9 - \%O_{2d}}\right)\left[\frac{100}{100 - \%H_2O}\right] \qquad \text{(Eq. A–3a)}$$

or

$$MPV = \left(\frac{F_c H_f}{A}\right)\left(\frac{100}{\%CO_{2d}}\right)\left[\frac{100}{100 - \%H_2O}\right] \qquad \text{(Eq. A–3b)}$$

Where:

MPV=maximum potential velocity (fpm, standard wet basis),

Fd=dry-basis F factor (dscf/mmBtu) from Table 1, Appendix F of this part,

Fc=carbon-based F factor (scfCO2/mmBtu) from Table 1, Appendix F of this part,

Hf=maximum heat input (mmBtu/minute) for all units, combined, exhausting to the stack or duct where the flow monitor is located,

A=inside cross sectional area (ft2) of the flue at the flow monitor location,

%O2d=maximum oxygen concentration, percent dry basis, under normal operating conditions,

%CO2d=minimum carbon dioxide concentration, percent dry basis, under normal operating conditions,

$\%H_2O$ = maximum percent flue gas moisture content under normal operating conditions.

If the volumetric flow rate exceeds the maximum potential flow calculated from the maximum potential velocity but does not exceed the full scale range during more than one clock hour and the flow monitor can accurately measure and record values, the flow rate may be reported for use in the Acid Rain Program. If the volumetric flow rate exceeds the monitor's ability to measure and record values accurately during a clock hour, and the full-scale exceedance is not during an out-of-control period, report the full-scale value as the flow rate for that clock hour. If full-scale exceedance occurs during more than one hour since the last adjustment of the full-scale range setting, adjust the full-scale range setting to prevent future exceedances. If the fuel supply, process parameters or other conditions change such that the maximum potential velocity may change significantly, adjust the range to assure the continued accuracy of the flow monitor. Calculate an adjusted span using the procedures in this section. Select the full-scale range of the instrument to be greater than or equal to the adjusted span value. Record and report the new full-scale range setting, calculations of the span value, MPV, and MPF, and the adjusted span value in an updated monitoring plan for the unit. Record and report the adjusted span and reference values as parts of the records for the calibration error test required by appendix B

of this part. Whenever the span value is adjusted, use reference values for the calibration error test based on the most recent adjusted span value.

Perform a calibration error test according to section 2.1.2 of this appendix whenever making a change to the flow monitor span or range. Recertification under §75.20(b) is required whenever making a significant change in the flow monitor's range that requires an internal modification to the monitor.

2.2 Design for Quality Control Testing

2.2.1 POLLUTANT CONCENTRATION AND CO_2 OR O_2 MONITORS

Design and equip each pollutant concentration and CO_2 or O_2 monitor with a calibration gas injection port that allows a check of the entire measurement system when calibration gases are introduced. For extractive and dilution type monitors, all monitoring components exposed to the sample gas, (e.g., sample lines, filters, scrubbers, conditioners, and as much of the probe as practicable) are included in the measurement system. For in situ type monitors, the calibration must check against the injected gas for the performance of all active electronic and optical components (e.g. transmitter, receiver, analyzer).

Design and equip each pollutant concentration or CO_2 or O_2 monitor to allow daily determinations of calibration error (positive or negative) at the zero- and high-level concentrations specified in Section 5.2 of this Appendix.

2.2.2 FLOW MONITORS

Design all flow monitors to meet the applicable performance specifications.

2.2.2.1 CALIBRATION ERROR TEST

Design and equip each flow monitor to allow for a daily calibration error test consisting of at least two reference values: (1) Zero to 20 percent of span or an equivalent reference value (e.g., pressure pulse or electronic signal) and (2) 50 to 70 percent of span. Flow monitor response, both before and after any adjustment, must be capable of being recorded by the data acquisition and handling system. Design each flow monitor to allow a daily calibration error test of (1) the entire flow monitoring system, from and including the probe tip (or equivalent) through and including the data acquisition and handling system, or (2) the flow monitoring system from and including the transducer through and including the data acquisition and handling system.

2.2.2.2 INTERFERENCE CHECK

Design and equip each flow monitor with a means to ensure that the moisture expected to occur at the monitoring location does not interfere with the proper functioning of the flow monitoring system. Design and equip each flow monitor with a means to detect, on at least a daily basis, pluggage of each sample line and sensing port, and malfunction of each resistance temperature detector (RTD), transceiver or equivalent.

Design and equip each differential pressure flow monitor to provide (1) an automatic, periodic back purging (simultaneously on both sides of the probe) or equivalent method of sufficient force and frequency to keep the probe and lines sufficiently free of obstructions on at least a daily basis to prevent velocity sensing interference, and (2) a means for detecting leaks in the system on at least a quarterly basis (manual check is acceptable).

Design and equip each thermal flow monitor with a means to ensure on at least a daily basis that the probe remains sufficiently clean to prevent velocity sensing interference.

Design and equip each ultrasonic flow monitor with a means to ensure on at least a daily basis that the transceivers remain sufficiently clean (e.g., backpurging system) to prevent velocity sensing interference.

3. PERFORMANCE SPECIFICATIONS

3.1 Calibration Error

The initial calibration error performance specification of SO_2 and NO_x pollutant concentration monitors shall not deviate from the reference value of the calibration gas by more than 2.5 percent based upon the span of the instrument, as calculated using Eq. A–5 of this appendix. Alternatively, where the span value is less than 200 ppm, calibration error test results are also acceptable if the absolute value of the difference between the monitor response value and the reference value, $|R–A|$ in Equation A–5 of this appendix, is less than or equal to 5 ppm. The calibration error of CO_2 or O_2 monitors shall not deviate from the reference value of the zero- or high-level calibration gas by more than 0.5 percent O_2 or CO_2 as calculated using the term $|R–A|$ in the numerator of Eq. A–5 of this appendix. The calibration error of flow monitors shall not exceed 3.0 percent based upon the span of the instrument as calculated using Eq. A–6 of this appendix.

3.2 Linearity Check

For SO_2 and NO_x pollutant concentration monitors, the error in linearity for each calibration gas concentration (low-, mid-, and high-levels) shall not exceed or deviate from the reference value by more than 5.0 percent (as calculated using Equation A–4 of this appendix). Linearity check results are also acceptable if the absolute value of the difference between the average of the monitor

response values and the average of the reference values, | R–A | in Equation A–4 of this appendix, is less than or equal to 5 ppm. For CO_2 or O_2 monitors:

(1) The error in linearity for each calibration gas concentration (low-, mid-, and high-levels) shall not exceed or deviate from the reference value by more than 5.0 percent as calculated using Equation A–4 of this appendix; or

(2) The absolute value of the difference between the average of the monitor response values and the average of the reference values, | R–A| in Equation A–4 of this appendix, shall be less than or equal to 0.5 percent CO_2 or O_2, whichever is less restrictive.

3.3 Relative Accuracy

3.3.1 RELATIVE ACCURACY FOR SO_2

The relative accuracy for SO_2 pollutant concentration monitors and for SO_2-diluent continuous emission monitoring systems used by units with a qualifying Phase I technology for the period during which the units are required to monitor SO_2 emission removal efficiency, from January 1, 1997 through December 31, 1999, shall not exceed 10.0 percent except as provided below in this section.

For affected units where the average of the monitor measurements of SO_2 concentration during the relative accuracy test audit is less than or equal to 250.0 ppm (or for SO_2 diluent monitors, less than or equal to 0.5 lb/mmBTU), the mean value of the monitor measurements shall not exceed ±15.0 ppm of the reference method mean value (or, for SO_2-diluent monitors, not to exceed ±0.03 lb/mmBTU for the period during which the units are required to monitor SO_2 emission removal efficiency, from January 1, 1997 through December 31, 1999) wherever the relative accuracy specification of 10.0 percent is not achieved.

3.3.2 RELATIVE ACCURACY FOR NO_x

The relative accuracy for NO_x continuous emission monitoring systems shall not exceed 10.0 percent.

For affected units where the average of the monitoring system measurements of NO_x emission rate during the relative accuracy test audit is less than or equal to 0.20 lb/mmBtu, the mean value of the NO_x continuous emission monitoring system measurements shall not exceed ±0.02 lb/mmBtu of the reference method mean value wherever the relative accuracy specification of 10.0 percent is not achieved.

3.3.3 RELATIVE ACCURACY FOR CO_2 AND O_2 POLLUTANT CONCENTRATION MONITORS

The relative accuracy for CO_2 and O_2 monitors shall not exceed 10.0 percent. The relative accuracy test results are also acceptable if the mean difference of the CO_2 or O_2 monitor measurements and the corresponding reference method measurement, calculated using Equation A–7 of this appendix, is within 1.0 percent CO_2 or O_2.

3.3.4 RELATIVE ACCURACY FOR FLOW

Except as provided below in this section, the relative accuracy for flow monitors, where volumetric gas flow is measured in scfh, shall not exceed 15.0 percent through December 31, 1999. Beginning on January 1, 2000 (except as provided below in this section), the relative accuracy of flow monitors shall not exceed 10.0 percent.

For affected units where the average of the flow monitor measurements of gas velocity during one or more operating levels of the relative accuracy test audit is less than or equal to 10.0 fps, the mean value of the flow monitor velocity measurements shall not exceed ±2.0 fps of the reference method mean value in fps wherever the relative accuracy specification above is not achieved.

3.3.5 COMBINED SO_2/FLOW MONITORING SYSTEM [RESERVED]

3.4 Bias

3.4.1 SO_2 POLLUTANT CONCENTRATION MONITORS AND NO_x CONTINUOUS EMISSION MONITORING SYSTEMS.

SO_2 pollutant concentration monitors and NO_x continuous emission monitoring systems shall not be biased low as determined by the test procedure in section 7.6 of this appendix. The bias specification applies to all SO_2 pollutant concentration monitors, including those measuring an average SO_2 concentration of 250.0 ppm or less, and to all NO_x continuous emission monitoring systems, including those measuring an average NO_x emission rate of 0.20 lb/mmBtu or less

3.4.2 FLOW MONITORS

Flow monitors shall not be biased low as determined by the test procedure in section 7.6 of this appendix. The bias specification applies to all flow monitors including those measuring an average gas velocity of 10.0 fps or less.

3.5 Cycle Time

The cycle time for pollutant concentration monitors, and continuous emission monitoring systems shall not exceed 15 min.

4. DATA ACQUISITION AND HANDLING SYSTEMS

Automated data acquisition and handling systems shall: (1) Read and record the full range of pollutant concentrations and volumetric flow from zero through span; and (2) provide a continuous, permanent record of all measurements and required information as an ASCII flat file capable of transmission

via an IBM-compatible personal computer diskette or other electronic media. These systems also shall have the capability of interpreting and converting the individual output signals from an SO_2 pollutant concentration monitor, a flow monitor, and a NO_x continuous emission monitoring system to produce a continuous readout of pollutant mass emission rates in the units of the standard. Where CO_2 emissions are measured with a continuous emission monitoring system, the data acquisition and handling system shall also produce a readout of CO_2 mass emissions in tons.

Data acquisition and handling systems shall also compute and record monitor calibration error; any bias adjustments to pollutant concentration, flow rate, or NO_x emission rate data; and all missing data procedure statistics specified in subpart D of this part.

For an excepted monitoring system under appendix D or E of this part, data acquisition and handling systems shall:

(1) Read and record the full range of fuel flowrate through the upper range value;

(2) Calculate and record intermediate values necessary to obtain emissions, such as mass fuel flowrate and heat input rate;

(3) Calculate and record emissions in units of the standard (lb/hr of SO_2, lb/mmBtu of NO_X);

(4) Predict and record NO_X emission rate using the heat input rate and the NO_X/heat input correlation developed under appendix E of this part;

(5) Calculate and record all missing data substitution values specified in appendix D or E of this part; and

(6) Provide a continuous, permanent record of all measurements and required information as an ASCII flat file capable of transmission via an IBM-compatible personal computer diskette or other electronic media.

5. CALIBRATION GAS

5.1 Reference Gases

For the purposes of part 75, calibration gases include the following.

5.1.1 STANDARD REFERENCE MATERIALS

These calibration gases may be obtained from the National Institute of Standards and Technology (NIST) at the following address: Quince Orchard and Cloppers Road, Gaithersburg, Maryland 20899.

5.1.2 NIST TRACEABLE REFERENCE MATERIALS

Contact the Quality Assurance Division (MD 77), Environmental Monitoring System Laboratory, U.S. Environmental Protection Agency, Research Triangle Park, North Carolina 27711 or the Organic Analytical Research Division of NIST at the above address for Standard Reference Materials for a list of vendors and cylinder gases.

5.1.3 EPA TRACEABILITY PROTOCOL 1 GASES

Protocol 1 gases must be vendor-certified to be within 2.0 percent of the concentration specified on the cylinder label (tag value).

5.1.4 RESEARCH GAS MIXTURES

Contact the Quality Assurance Division (MD 77), Environmental Monitoring System Laboratory, U.S. Environmental Protection Agency, Research Triangle Park, North Carolina 27711 or the Organic Analytical Research Division of NIST at the above address for Standard Reference Materials for a list of vendors and cylinder gases.

5.1.5 ZERO AIR MATERIAL

Use zero air material for calibrating at zero-level concentrations only. Zero air material shall be certified by the gas vendor or instrument manufacturer or vendor not to contain concentrations of SO_2 or NO_X above 0.1 ppm or CO_2 above 400 ppm, and not to contain concentrations of other gases that will interfere with instrument readings or cause the instrument to read concentrations of SO_2, NO_X, or CO_2.

5.1.6 NIST/EPA-APPROVED CERTIFIED REFERENCE MATERIALS

Existing certified reference materials as previously certified under EPA's former certified reference material program may be used for the remainder of the cylinder's shelf life.

5.2 Concentrations

Four concentration levels are required as follows.

5.2.1 ZERO-LEVEL CONCENTRATION

0 to 20 percent of span, including span for high scale or both low- and high-scale for SO_2 and NO_x pollutant concentration monitors, as appropriate.

5.2.2 LOW-LEVEL CONCENTRATION

20 to 30 percent of span, including span for high scale or both low- and high-scale for SO_2 and NO_x pollutant concentration monitors, as appropriate.

5.2.3 MID-LEVEL CONCENTRATION

50 to 60 percent of span, including span for high scale or both low- and high-scale for SO_2 and NO_x pollutant concentration monitors, as appropriate.

5.2.4 HIGH-LEVEL CONCENTRATION

80 to 100 percent of span, including span for high scale or both low- and high-scale for SO_2 and NO_x pollutant concentration monitors, as appropriate.

6. CERTIFICATION TESTS AND PROCEDURES

6.1 Pretest Preparation

Install the components of the continuous emission monitoring system (i.e., pollutant concentration monitors, CO_2 or O_2 monitor, and flow monitor) as specified in sections 1, 2, and 3 of this appendix, and prepare each system component and the combined system for operation in accordance with the manufacturer's written instructions. Operate the unit(s) during each period when measurements are made. Units may be tested on non-consecutive days. To the extent practicable, test the DAHS software prior to testing the monitoring hardware.

6.2 Linearity Check

Measure the linearity of each pollutant concentration monitor and CO_2 or O_2 monitor according to the following procedures.

Challenge each pollutant concentration or CO_2 or O_2 monitor with NIST/EPA-approved certified reference material, NIST traceable reference material, standard reference material, or Protocol 1 calibration gases certified to be within 2 percent of the concentration specified on the label at the low-, mid-, or high-level concentrations specified in section 5.2 of this appendix. For units using emission controls and other units using a maximum expected concentration value to determine calibration gases, perform a linearity check on both the low- and high-scales.

Introduce the calibration gas at the gas injection port, as specified in section 2.2.1 of this appendix. Operate each monitor at its normal operating temperature and conditions. For extractive and dilution type monitors, pass the calibration gas through all filters, scrubbers, conditioners, and other monitor components used during normal sampling and through as much of the sampling probe as is practical. For in situ type monitors, perform calibration checking all active electronic and optical components, including the transmitter, receiver, and analyzer.

Repeat the procedure for SO_2 and NO_x pollutant concentration monitors using the low-scale for units equipped with emission controls with dual span monitors. Challenge the monitor three times with each reference gas. Do not use the same gas twice in succession. Record the monitor response from the data acquisition and handling system (see example data sheet in Figure 1). For each concentration, use the average of the responses to determine the error in linearity using Equation A–4 in this appendix.

Linearity checks are acceptable for monitor or monitoring system certification if none of the test results exceed the applicable performance specifications in section 3.2 of this appendix.

6.3 7-Day Calibration Error Test

6.3.1 POLLUTANT CONCENTRATION MONITOR AND CO_2 OR O_2 MONITOR 7-DAY CALIBRATION ERROR TEST

Measure the calibration error of each pollutant concentration monitor and CO_2 or O_2 monitor while the unit is operating once each day for 7 consecutive operating days according to the following procedures. (In the event that extended unit outages occur after the commencement of the test, the 7 consecutive unit operating days need not be 7 consecutive calendar days.) Units using dual span monitors must perform the calibration error test on both high- and low-scales of the pollutant concentration monitor.

Do not make manual or automatic adjustments to the monitor settings until after taking measurements at both zero and high concentration levels for that day during the 7-day test. If automatic adjustments are made following both injections, conduct the calibration error test in a way that the magnitude of the adjustments can be determined and recorded. Record and report test results for each day using the unadjusted concentration measured in the calibration error test prior to making any manual or automatic adjustments (i.e. resetting the calibration).

The calibration error tests should be approximately 24 hours apart, (unless the 7-day test is performed over non-consecutive days). Perform calibration error tests at two concentrations: (1) zero-level and (2) high-level, as specified in section 5.2 of this appendix. In addition, repeat the procedure for SO_2 and NO_X pollutant concentration monitors using the low-scale for units equipped with emission controls or other units with dual span monitors. Use only NIST traceable reference material, standard reference material, NIST/EPA-approved certified reference material, research gas material, Protocol 1 calibration gases certified by the vendor to be within 2 percent of the label value or zero air material for the zero level only.

Introduce the calibration gas at the gas injection port, as specified in section 2.2.1 of this appendix. Operate each monitor in its normal sampling mode. For extractive and dilution type monitors, pass the audit gas through all filters, scrubbers, conditioners, and other monitor components used during normal sampling and through as much of the sampling probe as is practical. For in situ type monitors, perform calibration checking all active electronic and optical components, including the transmitter, receiver, and analyzer. Challenge the pollutant concentration monitors and CO_2 or O_2 monitors once with each gas. Record the monitor response from the data acquisition and handling system. Using Equation A–5 of this appendix, determine the calibration error at each concentration once each day (at approximately

24-hour intervals) for 7 consecutive days according to the procedures given in this section.

Calibration error tests are acceptable for monitor or monitoring system certification if none of these daily calibration error test results exceed the applicable performance specifications in section 3.1 of this appendix.

6.3.2 FLOW MONITOR 7-DAY CALIBRATION ERROR TEST

Measure the calibration error of each flow monitor according to the following procedures.

Introduce the reference signal corresponding to the values specified in section 2.2.2.1 of this appendix to the probe tip (or equivalent), or to the transducer. During the 7-day certification test period, conduct the calibration error test while the unit is operating once each unit operating day (as close to 24-hour intervals as practicable). In the event that extended unit outages occur after the commencement of the test, the 7 consecutive operating days need not be 7 consecutive calendar days. Record the flow monitor responses by means of the data acquisition and handling system. Calculate the calibration error using Equation A–6 of this appendix.

Do not perform any corrective maintenance, repair, or replacement upon the flow monitor during the 7-day certification test period other than that required in the quality assurance/quality control (QA/QC) plan required by appendix B of this part. Do not make adjustments between the zero and high reference level measurements on any day during the 7-day test. If the flow monitor operates within the calibration error performance specification (i.e., less than or equal to 3 percent error each day and requiring no corrective maintenance, repair, or replacement during the 7-day test period) the flow monitor passes the calibration error test portion of the certification test. Record all maintenance activities and the magnitude of any adjustments. Record output readings from the data acquisition and handling system before and after all adjustments. Record and report all calibration error test results using the unadjusted flow rate measured in the calibration error test prior to resetting the calibration. Record all adjustments made during the seven day period at the time the adjustment is made and report them in the certification application.

6.4 Cycle Time Test

Perform cycle time tests for each pollutant concentration monitor, and continuous emission monitoring system while the unit is operating, according to the following procedures (see also Figure 6 of this appendix).

Use a zero-level and a high-level calibration gas (as defined in section 5.2 of this appendix) alternately. To determine the upscale elapsed time, inject a zero-level concentration calibration gas into the probe tip (or injection port leading to the calibration cell, for in situ systems with no probe). Record the stable starting gas value and start time, using the data acquisition and handling system (DAHS). Next, allow the monitor to measure the concentration of flue gas emissions until the response stabilizes. Record the stable ending stack emissions value and the end time of the test using the DAHS. Determine the upscale elapsed time as the time it takes for 95.0 percent of the step change to be achieved between the stable starting gas value and the stable ending stack emissions value. Then repeat the procedure, starting by injecting the high-level gas concentration to determine the downscale elapsed time, which is the time it takes for 95.0 percent of the step change to be achieved between the stable starting gas value and the stable ending stack emissions value. End the downscale test by measuring the stable concentration of flue gas emissions. Record the stable starting and ending monitor values, the start and end times, and the downscale elapsed time for the monitor using the DAHS. A stable value is equivalent to a reading with a change of less than 2 percent of the span value for 2 minutes, or a reading with a change of less than 6 percent from the measured average concentration over 6 minutes. (Owners or operators of systems which do not record data in 1-minute or 3-minute intervals may petition the Administrator under §75.66 for alternative stabilization criteria).

For monitors or monitoring systems that perform a series of operations (such as purge, sample, and analyze), time the injections of the calibration gases so they will produce the longest possible cycle time. Report the slower of the two elapsed times (upscale or downscale) as the cycle time for the analyzer. (See Figure 5 of this appendix.) For the NO_X-diluent continuous emission monitoring system test and SO_2-diluent continuous emission monitoring system test, record and report the longer cycle time of the two component analyzers as the system cycle time.

For time-shared systems, this procedure must be done at all probe locations that will be polled within the same 15-minute period during monitoring system operations. To determine the cycle time for time-shared systems, add together the longest cycle time obtained at each of the probe locations. Report the sum of the longest cycle time at each of the probe locations plus the sum of the time required for all purge cycles (as determined by the continuous emission monitoring system manufacturer) at each of the probe locations as the cycle time for each of the time-shared systems. For monitors with dual ranges, report the test results from on the range giving the longer cycle time. Cycle time test results are acceptable for monitor

or monitoring system certification if none of the cycle times exceed 15 minutes.

6.5 *Relative Accuracy and Bias Tests*

Perform relative accuracy test audits for each CO_2 and SO_2 pollutant concentration monitor, each O_2 monitor used to calculate heat input or CO_2 concentration, each SO_2 diluent continuous emission monitoring system (lb/mmBtu) used by units with a qualifying Phase I technology for the period during which the units are required to monitor SO_2 emission removal efficiency, from January 1, 1997 through December 31, 1999, flow monitor, and NO_X continuous emission monitoring system. For monitors or monitoring systems with dual ranges, perform the relative accuracy test on one range measuring emissions in the stack at the time of testing. Record monitor or monitoring system output from the data acquisition and handling system. Perform concurrent relative accuracy test audits for each SO_2 pollutant concentration monitor and flow monitor, at least once a year (see section 2.3.1 of appendix B of this part), during the flow monitor test at the normal operating level specified in section 6.5.2 of this appendix. Concurrent relative accuracy test audits may be performed by conducting simultaneous SO_2 and flow relative accuracy test audit runs, or by alternating an SO_2 relative accuracy test audit run with a flow relative accuracy test audit run until all relative accuracy test audit runs are completed. Where two or more probes are in the same proximity, care should be taken to prevent probes from interfering with each other's sampling. For each SO_2 pollutant concentration monitor, each flow monitor, and each NO_X continuous emission monitoring system, calculate bias, as well as relative accuracy, with data from the relative accuracy test audits.

Complete each relative accuracy test audit within a 7-day period while the unit (or units, if more than one unit exhausts into the flue) is combusting the fuel that is normal for that unit. When relative accuracy test audits are performed on continuous emission monitoring systems or component(s) on bypass stacks/ducts, use the fuel normally combusted by the unit (or units, if more than one unit exhausts into the flue) when emissions exhaust through the bypass stack/ducts. Do not perform corrective maintenance, repairs, replacements or adjustments during the relative accuracy test audit other than as required in the operation and maintenance manual.

6.5.1 SO_2, O_2 AND CO_2 POLLUTANT CONCENTRATION MONITORS AND SO_2-DILUENT AND NO_X CONTINUOUS EMISSION MONITORING SYSTEMS

Perform relative accuracy test audits for each SO_2, O_2 or CO_2 pollutant concentration monitor or NO_X continuous emission monitoring system or SO_2-diluent continuous emission monitoring system (lb/mmBtu) used by units with a qualifying Phase I technology for the period during which the units are required to monitor SO_2 emission removal efficiency, from January 1, 1997 through December 31, 1999, at a normal operating level for the unit (or combined units, if common stack).

6.5.2 FLOW MONITORS

Except for flow monitors on bypass stacks/ducts and peaking units, perform relative accuracy test audits for each flow monitor at three different exhaust gas velocities, expressed in terms of percent of flow monitor span, or different operating or load levels. For a common stack/duct, the three different exhaust gas velocities may be obtained from frequently used unit/load combinations for units exhausting to the common stack. Select the operating levels as follows: (1) A frequently used low operating level selected within the range between the minimum safe and stable operating level and 50 percent load, (2) a frequently used high operating level selected within the range between 80 percent of the maximum operating level and the maximum operating level, and (3) the normal operating level. If the normal operating level is within 10.0 percent of the maximum operating level of either (1) or (2) above, use a level that is evenly spaced between the low and high operating levels used. The maximum operating level shall be equal to the nameplate capacity less any physical or regulatory limitations or other deratings. Calculate flow monitor relative accuracy at each of the three operating levels. If a flow monitor fails the relative accuracy test on any of the three levels of a three-level relative accuracy test audit, the three-level relative accuracy test audit must be repeated. For flow monitors on bypass stacks/ducts and peaking units, the flow monitor relative accuracy test audit is required only at the normal operating level.

6.5.3 CO_2 POLLUTANT CONCENTRATION MONITORS

Perform relative accuracy test audits for each CO_2 monitor (measuring in percent CO_2) at a normal operating level for the unit (or combined units, if common stack).

6.5.4 CALCULATIONS

Using the data from the relative accuracy test audits, calculate relative accuracy and bias in accordance with the procedures and equations specified in section 7 of this appendix.

6.5.5 REFERENCE METHOD MEASUREMENT LOCATION

Select a location for reference method measurements that is (1) accessible; (2) in

the same proximity as the monitor or monitoring system location; and (3) meets the requirements of Performance Specification 2 in appendix B of part 60 of this chapter for SO_2 and NO_X continuous emission monitoring systems, Performance Specification 3 in appendix B of part 60 of this chapter for CO_2 or O_2 monitors, or Method 1 (or 1A) in appendix A of part 60 of this chapter for volumetric flow, except as otherwise indicated in this section or as approved by the Administrator.

6.5.6 Reference Method Traverse Point Selection

Select traverse points that (1) ensure acquisition of representative samples of pollutant and diluent concentrations, moisture content, temperature, and flue gas flow rate over the flue cross section; and (2) meet the requirements of Performance Specification 2 in appendix B of part 60 of this chapter (for SO_2 and NO_X), Performance Specification 3 in appendix B of part 60 of this chapter (for O_2 and CO_2), Method 1 (or 1A) (for volumetric flow), Method 3 (for molecular weight), and Method 4 (for moisture determination) in appendix A of part 60 of this chapter.

6.5.7 Sampling Strategy

Conduct the reference method tests so they will yield results representative of the pollutant concentration, emission rate, moisture, temperature, and flue gas flow rate from the unit and can be correlated with the pollutant concentration monitor, CO_2 or O_2 monitor, flow monitor, and SO_2 or NO_X continuous emission monitoring system measurements. Conduct the diluent (O_2 or CO_2) measurements and any moisture measurements that may be needed simultaneously with the pollutant concentration and flue gas flow rate measurements. If an O_2 monitor is used as a CO_2 continuous emission monitoring system, but not as a diluent monitor, measure CO_2 with the reference method. To properly correlate individual SO_2 and CO_2 pollutant concentration monitor data, O_2 monitor data, SO_2 or NO_X continuous emission monitoring system data (in lb/mmBtu), and volumetric flow rate data with the reference method data, mark the beginning and end of each reference method test run (including the exact time of day) on the individual chart recorder(s) or other permanent recording device(s).

6.5.8 Correlation of Reference Method and Continuous Emission Monitoring System

Confirm that the monitor or monitoring system and reference method test results are on consistent moisture, pressure, temperature, and diluent concentration basis (e.g., since the flow monitor measures flow rate on a wet basis, Method 2 test results must also be on a wet basis). Compare flow-monitor and reference method results on a scfh basis. Also, consider the response times of the pollutant concentration monitor, the continuous emission monitoring system, and the flow monitoring system to ensure comparison of simultaneous measurements.

For each relative accuracy test audit run, compare the measurements obtained from the monitor or continuous emission monitoring system (in ppm, percent CO_2, lb/mmBtu, or other units) against the corresponding reference method values. Tabulate the paired data in a table such as the one shown in Figure 2.

6.5.9 Number of Reference Method Tests

Perform a minimum of nine sets of paired monitor (or monitoring system) and reference method test data for every required (i.e., certification, semiannual, or annual) relative accuracy or bias test audit. For the certification and annual quality assurance relative accuracy test audits for flow monitors, perform a minimum of nine sets at each of the three operating levels specified in section 6.5.2 of this appendix. Conduct each set within a period of 30 to 60 minutes.

NOTE: The tester may choose to perform more than nine sets of reference method tests. If this option is chosen, the tester may reject a maximum of three sets of the test results as long as the total number of test results used to determine the relative accuracy or bias is greater than or equal to nine. Report all data, including the rejected data, and reference method test results.

6.5.10 Reference Methods

The following methods from appendix A to part 60 of this chapter or their approved alternatives are the reference methods for performing relative accuracy test audits: Method 1 or 1A for siting; Method 2 (or 2A, 2C, or 2D) for velocity; Methods 3, 3A, or 3B for O_2 or CO_2; Method 4 for moisture; Methods 6, 6A, or 6C for SO_2; Methods 7, 7A, 7C, 7D, 7E for NO_X, excluding the exception in section 5.1.2 of Method 7E. When using Method 7E for measuring NO_X concentration, total NO_X, both NO and NO_2, must be measured.

7. Calculations

7.1 Linearity Check

Analyze the linearity data for pollutant concentration and CO_2 or O_2 monitors as follows. Calculate the percentage error in linearity based upon the reference value at the low-level, mid-level, and high-level concentrations specified in section 6.2 of this appendix. Perform this calculation once during the certification test. Use the following equation to calculate the error in linearity for each reference value.

$$LE = \frac{|R-A|}{R} \times 100$$

(Eq. A–4)

where,

LE=Percentage Linearity error, based upon the reference value.

R=Reference value of Low-, mid-, or high-level calibration gas introduced into the monitoring system.

A=Average of the monitoring system responses.

7.2 Calibration Error

7.2.1 Pollutant Concentration and Diluent Monitors

For each reference value, calculate the percentage calibration error based upon instrument span for daily calibration error tests using the following equation:

$$CE = \frac{|R-A|}{S} \times 100$$

(Eq. A–5)

where,

CE=Percentage Calibration error based upon span of the instrument.

R=Reference value of zero- or high-level calibration gas introduced into the monitoring system.

A=Actual monitoring system response to the calibration gas.

S=Span of the instrument, as specified in Section 2 of this appendix.

7.2.2 Flow Monitor Calibration Error

For each reference value, calculate the percentage calibration error based upon span using the following equation:

$$CE = \frac{|R-A|}{S} \times 100 \qquad \text{(Eq. A–6)}$$

where:

CE=Calibration error;

R=Low or high level reference value specified in section 2.2.2.1 of this appendix;

A=Actual flow monitor response to the reference value; and

S=Flow monitor span or equivalent reference value (e.g., pressure pulse or electronic signal).

7.3 Relative Accuracy for SO_2 and CO_2 Pollutant Concentration Monitors, SO_2-Diluent Continuous Emission Monitoring Systems, and Flow Monitors

Analyze the relative accuracy test audit data from the reference method tests for SO_2 and CO_2 pollutant concentration monitors, SO_2-diluent continuous emission monitoring systems (lb/mmBtu) used by units with a qualifying Phase I technology for the period during which the units are required to monitor SO_2 emission removal efficiency, from January 1, 1997 through December 31, 1999, and flow monitors using the following procedures. Summarize the results on a data sheet. An example is shown in Figure 2. Calculate the mean of the monitor or monitoring system measurement values. Calculate the mean of the reference method values. Using data from the automated data acquisition and handling system, calculate the arithmetic differences between the reference method and monitor measurement data sets. Then calculate the arithmetic mean of the difference, the standard deviation, the confidence coefficient, and the monitor or monitoring system relative accuracy using the following procedures and equations.

7.3.1 ARITHMETIC MEAN

Calculate the arithmetic mean of the differences, $\bar{d}$, of a data set as follows.

$$\bar{d} = \frac{1}{n} \sum_{i=1}^{n} d_i$$

(Eq. A–7)

where,

n=Number of data points.

$\sum_{i=1}^{n} d_i$=Algebraic sum of the individual differences d_i.

d_i=The difference between a reference method value and the corresponding continuous emission monitoring system value (RM_i–CEM_i) at a given point in time i.

When calculating the arithmetic mean of the difference of a flow monitor data set, be sure to correct the monitor measurements for moisture if applicable.

7.3.2 STANDARD DEVIATION

Calculate the standard deviation, S_d, of a data set as follows:

$$S_d = \sqrt{\frac{\sum_{i=1}^{n} d_i^2 - \left[\frac{\left(\sum_{i=1}^{n} d_i\right)^2}{n}\right]}{n-1}}$$

(Eq. A–8)

7.3.3 CONFIDENCE COEFFICIENT

Calculate the confidence coefficient (one-tailed), cc, of a data set as follows.

$$cc = t_{0.025} \frac{S_d}{\sqrt{n}}$$

(eq. A–9)

where,

$t_{0.025}$=t value (see Table 7–1).

TABLE 7–1 T-VALUES

n-1	$t_{0.025}$	n-1	$t_{0.025}$	n-1	$t_{0.025}$
1	12.706	12	2.179	23	2.069
2	4.303	13	2.160	24	2.064
3	3.182	14	2.145	25	2.060
4	2.776	15	2.131	26	2.056
5	2.571	16	2.120	27	2.052
6	2.447	17	2.110	28	2.048
7	2.365	18	2.101	29	2.045
8	2.306	19	2.093	30	2.042
9	2.262	20	2.086	40	2.021
10	2.228	21	2.080	60	2.000
11	2.201	22	2.074	>60	1.960

7.3.4 Relative Accuracy

Calculate the relative accuracy of a data set using the following equation.

$$RA = \frac{|\bar{d}| + |cc|}{\overline{RM}} \times 100$$

(Eq. A–10)

where,

RM=Arithmetic mean of the reference method values.

$|\bar{d}|$=The absolute value of the mean difference between the reference method values and the corresponding continuous emission monitoring system values.

|cc|=The absolute value of the confidence coefficient.

7.4 Relative Accuracy for NO_x Continuous Emission Monitoring Systems

Analyze the relative accuracy test audit data from the reference method tests for NO_x continuous emissions monitoring system as follows.

7.4.1 DATA PREPARATION

If C_{NOx}, the NO_x concentration, is in ppm, multiply it by 1.194×10^{-7} (lb/dscf)/ppm to convert it to units of lb/dscf. If C_{NOx} is in mg/dscm, multiply it by 6.24×10^{-8} (lb/dscf)/(mg/dscm) to convert it to lb/dscf. Then, use the diluent (O_2 or CO_2) reference method results for the run and the appropriate F or F_c factor from Table 1 in Appendix F of this part to convert C_{NOx} from lb/dscf to lb/mmBtu units. Use the equations and procedure in section 3 of Appendix F to this part, as appropriate.

7.4.2 NO_x EMISSION RATE (MONITORING SYSTEM)

For each test run in a data set, calculate the average NO_x emission rate (in lb/mmBtu), by means of the data acquisition and handling system, during the time period of the test run. Tabulate the results as shown in example Figure 4.

7.4.3 RELATIVE ACCURACY

Use the equations and procedures in section 7.3 above to calculate the relative accuracy for the NO_x continuous emission monitoring system. In using Equation A–7, ''d'' is, for each run, the difference between the NO_x emission rate values (in lb/mmBtu) obtained from the reference method data and the NO_x continuous emission monitoring system.

7.5 Relative Accuracy for Combined SO_2/Flow [Reserved]

7.6 Bias Test and Adjustment Factor

Test the relative accuracy test audit data sets for SO_2 pollutant concentration monitors, flow monitors, and NO_X continuous emission monitoring systems for bias using the procedures outlined below.

7.6.1 ARITHMETIC MEAN

Calculate the arithmetic mean of the difference, $\bar{d}$, of the data set using Equation A–7 of this appendix. To calculate bias for an SO_2 pollutant concentration monitor, ''d'' is, for each paired data point, the difference between the SO_2 concentration value (in ppm) obtained from the reference method and the monitor. To calculate bias for a flow monitor, ''d'' is, for each paired data point, the difference between the flow rate values (in scfh) obtained from the reference method and the monitor. To calculate bias for a NO_X continuous emission monitoring system, ''d'' is, for each paired data point, the difference between the NO_X emission rate values (in lb/mmBtu) obtained from the reference method and the monitoring system.

7.6.2 STANDARD DEVIATION

Calculate the standard deviation, S_d, of the data set using Equation A–8.

7.6.3 CONFIDENCE COEFFICIENT

Calculate the confidence coefficient, cc, of the data set using Equation A–9.

7.6.4 BIAS TEST

If the mean difference, d, is greater than the absolute value of the confidence coefficient, |cc|, the monitor or monitoring system has failed to meet the bias test requirement. For flow monitor bias tests, if the mean difference, d, is greater than |cc| at the operating level closest to normal operating level during the 3-level RATA, the monitor has failed to meet the bias test requirement. For flow monitors, apply the bias test at the operating level closest to normal operating level during the 3-level RATA.

7.6.5 BIAS ADJUSTMENT

If the monitor or monitoring system fails to meet the bias test requirement, adjust the value obtained from the monitor using the following equation:

$$CEM_i^{Adjusted} = CEM_i^{Monitor} \times BAF \qquad \text{(Eq. A–11)}$$

Where:

CEM_i Monitor=Data (measurement) provided by the monitor at time i.

CEM_i Adjusted=Data value, adjusted for bias, at time i.

BAF=Bias adjustment factor, defined by

$$BAF = 1 + \frac{|\bar{d}|}{\overline{CEM}} \qquad \text{(Eq. A–12)}$$

Where:

BAF=Bias adjustment factor, calculated to the nearest thousandth.

d=Arithmetic mean of the difference obtained during the failed bias test using Equation A–7.

CEM=Mean of the data values provided by the monitor during the failed bias test.

If the bias test is failed by a flow monitor at the operating level closest to normal on a 3-level relative accuracy test audit, calculate the bias adjustment factor for each of the three operating levels. Apply the largest of the three bias adjustment factors to subsequent flow monitor data using Equation A–11.

Apply this adjustment prospectively to all monitor or monitoring system data from the date and time of the failed bias test until the date and time of a relative accuracy test audit that does not show bias. Use the adjusted values in computing substitution values in the missing data procedure, as specified in subpart D of this part, and in reporting the concentration of SO_2, the flow rate, and the average NO_X emission rate and calculated mass emissions of SO_2 and CO_2 during the quarter and calendar year, as specified in subpart G of this part.

Figures for Appendix A of Part 75

FIGURE 1.—LINEARITY ERROR DETERMINATION

Day	Date and time	Reference value	Monitor value	Difference	Percent of reference value
Low-level:					

Figures for Appendix A of Part 75—Continued

FIGURE 1.—LINEARITY ERROR DETERMINATION

Day	Date and time	Reference value	Monitor value	Difference	Percent of reference value
Mid-level:					
High-level:					

FIGURE 2.—RELATIVE ACCURACY DETERMINATION (POLLUTANT CONCENTRATION MONITORS)

Run No.	Date and time	SO_2 (ppm[c])			Date and time	CO_2 (Pollutant) (ppm[c])		
		RM[a]	M[b]	Diff		RM[a]	M[b]	Diff
1								
2								
3								
4								
5								
6								
7								
8								
9								
10								
11								
12								
Arithmetic Mean Difference (Eq. A–7). Confidence Coefficient (Eq. A–9). Relative Accuracy (Eq. A–10).								

[a] RM means ''reference method data.''
[b] M means ''monitor data.''
[c] Make sure the RM and M data are on a consistent basis, either wet or dry.

FIGURE 3.—RELATIVE ACCURACY DETERMINATION (FLOW MONITORS)

Run No.	Date and time	Flow rate (Low) (scf/hr)*			Date and time	Flow rate (Normal) (scf/hr)*			Date and time	Flow rate (High) (scf/hr)*		
		RM	M	Diff		RM	M	Diff		RM	M	Diff
1												
2												
3												
4												
5												
6												
7												
8												
9												
10												
11												
12												
Arithmetic Mean Difference (Eq. A–7). Confidence Coefficient (Eq. A–9). Relative Accuracy (Eq. A–10).												

*Make sure the RM and M data are on a consistent basis, either wet or dry.

FIGURE 4.—RELATIVE ACCURACY DETERMINATION (NO_X/Diluent Combined System)

Run No.	Date and time	Reference method data		NO_X system (lb/mmBtu)		
		NO_X( )[a]	O_2/CO_2%	RM	M	Difference
1						
2						
3						
4						
5						
6						
7						
8						
9						
10						
11						
12						
Arithmetic Mean Difference (Eq. A–7). Confidence Coefficient (Eq. A–9). Relative Accuracy (Eq. A–10).						

[a] Specify units: ppm, lb/dscf, mg/dscm.

FIGURE 5—CYCLE TIME

Date of test _____

Component/system ID#≦ _____

Analyzer type _____

Serial Number _____

High level gas concentration: _____ ppm/% (circle one)

Zero level gas concentration: _____ ppm/% (circle one)

Analyzer span setting: _____ ppm/% (circle one)

Upscale:

Stable starting monitor value: _____ ppm/% (circle one)

Stable ending monitor reading: _____ ppm/% (circle one)

Elapsed time: _____ seconds

Downscale:

Stable starting monitor value: _____ ppm/% (circle one)

Stable ending monitor value: _____ ppm/% (circle one)

Elapsed time: _____ seconds

Component cycle time= _____ seconds

System cycle time= _____ seconds

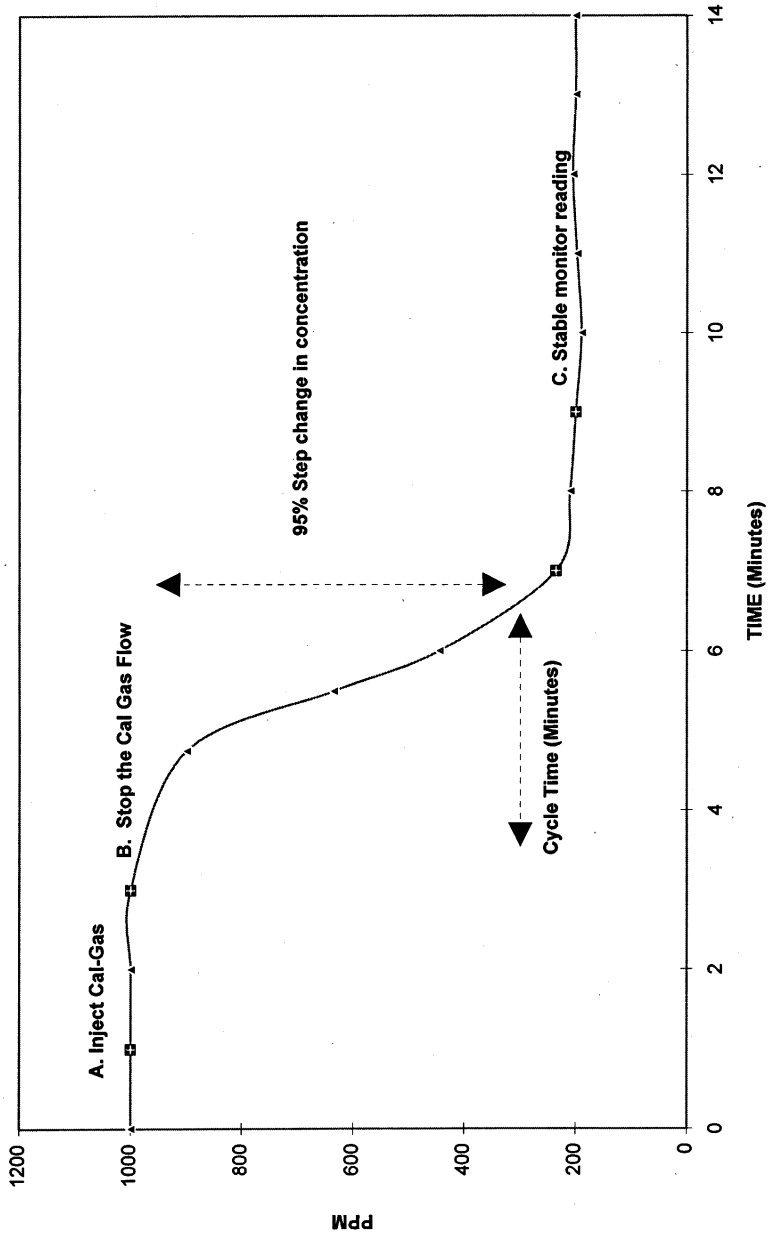

Figure 6. Downscale Cycle Time Test

A. To determine the downscale cycle time, inject a high level calibration gas into the port leading to the calibration cell or thimble.

B. Allow the analyzer to stabilize. Record the stabilized value. Stop the calibration gas flow and allow the monitor to measure the

flue gas emissions until the response stabilizes.

C. Record the stabilized value. A stable reading is achieved when the concentration reading deviates less than 6% from the measured average concentration in 6 minutes or if it deviates less than 2% of the monitor's span value in 2 minutes. (Owners and operators of units that do not record data in 1 minute or 3 minute intervals may petition the Administrator under section 75.66 for alternative stabilization criteria.)

D. Determine the step change. The step change is equal to the difference between the stabilized calibration gas value (Point B) and the final stable value (Point C). Take 95% of the step change value and subtract the result from the stabilized calibration gas value (Point B). Determine the time at which 95% of the step change occurred (Point D).

E. Determine the cycle time. The cycle time is equal to the downscale elapsed time, i.e. the time at which 95% of the step change occurred (point D) minus the time at which the calibration gas flow was stopped (Point B). In this example, cycle time=(6.5−4)=2.5 minutes (Report as 3 minutes).

F. To determine the cycle time for the upscale test, inject a zero scale calibration gas into the probe and repeat the procedures described above, except that 95% of the step change in concentration is added to the stabilized calibration gas value. Afterwards, compare the two cycle times achieved for both the upscale and downscale tests. The longer of these two times equals the cycle time for the analyzer.

[58 FR 3701, Jan. 11, 1993, as amended at 60 FR 26541–26546, 26569–26570, May 17, 1995; 61 FR 25582, May 22, 1996; 61 FR 59162, Nov. 20, 1996]

APPENDIX B TO PART 75—QUALITY ASSURANCE AND QUALITY CONTROL PROCEDURES

1. QUALITY CONTROL PROGRAM

Develop and implement a quality control program for the continuous emission monitoring systems and their components. As a minimum, include in each quality control program a written plan that describes in detail complete, step-by-step procedures and operations for each of the following activities.

1.1 Calibration Error Test and Linearity Check Procedures

Identify calibration error test and linearity check procedures specific to the continuous emission monitoring system that may require variance from the procedures in Appendix A to this part (e.g., how gases are to be injected, adjustments of flow rates and pressures, introduction of reference values, length of time for injection of calibration gases, steps for obtaining calibration error or error in linearity, determination of interferences, and when calibration adjustments should be made).

1.2 Calibration and Linearity Adjustments

Explain how each component of the continuous emission monitoring system will be adjusted to provide correct responses to calibration gases, reference values, and/or indications of interference both initially and after repairs or corrective action. Identify equations, conversion factors, assumed moisture content, and other factors affecting calibration of each continuous emission monitoring system.

1.3 Preventive Maintenance

Keep a written record of procedures, including those specified by the manufacturers, needed to maintain the continuous emission monitoring system in proper operating condition and a schedule for those procedures. Include provisions for maintaining an inventory of spare parts.

1.4 Audit Procedures

Keep a written record of procedures and details peculiar to the installed continuous emission monitoring system that are to be used for relative accuracy test audits, such as sampling and analysis methods.

1.5 Recordkeeping and Reporting

Keep a written record describing procedures that will be used to implement the recordkeeping and reporting requirements in subparts F and G of this part.

1.6 Parametric Monitoring for Units With Add-On Emission Controls

The owner or operator shall keep a written (or electronic) record including a list of operating parameters for the add-on SO_2 or NO_X emission controls, including parameters in §75.55(b), and the range of each operating parameter that indicates the add-on emission controls are operating properly.

The owner or operator shall keep a written (or electronic) record of the parametric monitoring data during each hour of each SO_2 or NO_X missing data period.

2. FREQUENCY OF TESTING

A summary chart showing each quality assurance test and the frequency at which each test is required is located at the end of this appendix in Figure 1.

2.1 Daily Assessments

Perform the following daily assessments to quality-assure the hourly data recorded by the monitoring systems during each period of unit operation, or, for a bypass stack or duct, each period in which emissions pass

through the bypass stack or duct. These requirements are effective as of the date when the monitor or continuous emission monitoring system completes certification testing.

2.1.1 CALIBRATION ERROR TEST

Except as provided in section 2.1.1.2 of this appendix, perform the daily calibration error test of each gas monitoring system according to the procedure in section 6.3.1 of appendix A of this part and perform the daily calibration error test of each flow monitoring system according to the procedure in section 6.3.2 of appendix A of this part.

For units with add-on emission controls and dual-span or auto-ranging monitors, and other units that use the maximum expected concentration to determine calibration gas values, perform the daily calibration error tests on each scale that has been used since the previous calibration error test. For example, if the pollutant concentration has not exceeded the low-scale value (based on the maximum expected concentration) since the previous calibration error test, the calibration error test may be performed on the low-scale only. If, however, the concentration has exceeded the low-scale span value for one hour or longer since the previous calibration error test, perform the calibration error test on both the low- and high-scales.

2.1.1.1 On-line Daily Calibration Error Tests. Except as provided in section 2.1.1.2 of this appendix, all daily calibration error tests must be performed while the unit is in operation at normal, stable conditions (i.e. ''on-line'').

2.1.1.2 Off-line Daily Calibration Error Tests. Daily calibrations may be performed while the unit is not operating (i.e., ''off-line'') and may be used to validate data for a monitoring system that meets the following conditions:

(1) An initial demonstration test of the monitoring system is successfully completed and the results are reported in the quarterly report required under §75.64 of this part. The initial demonstration test, hereafter called the ''off-line calibration demonstration'', consists of an off-line calibration error test followed by an on-line calibration error test. Both the off-line and on-line portions of the off-line calibration demonstration must meet the calibration error performance specification in section 3.1 of appendix A of this part. Upon completion of the off-line portion of the demonstration, the zero and upscale monitor responses may be adjusted, but only toward the true values of the calibration gases or reference signals used to perform the test and only in accordance with the routine calibration adjustment procedures specified in the quality control program required under section 1 of appendix B to this part. Once these adjustments are made, no further adjustments may be made to the monitoring system until after completion of the on-line portion of the off-line calibration demonstration. Within 26 clock hours of the completion hour of the off-line portion of the demonstration, the monitoring system must successfully complete the first attempted calibration error test, i.e., the on-line portion of the demonstration.

(2) For each monitoring system that has passed the off-line calibration demonstration, a successful on-line calibration error test of the monitoring system must be completed no later than 26 unit operating hours after each off-line calibration error test used for data validation.

2.1.2 DAILY FLOW INTERFERENCE CHECK

Perform the daily flow monitor interference checks specified in section 2.2.2.2 of appendix A of this part while the unit is in operation at normal, stable conditions.

2.1.3 RECALIBRATION

The EPA recommends adjusting the calibration, at a minimum, whenever the daily calibration error exceeds the limits of the applicable performance specification for the pollutant concentration monitor, CO_2, or O_2 monitor, or flow monitor in appendix A of this part.

2.1.4 OUT-OF-CONTROL PERIOD

An out-of-control period occurs when the calibration error of an SO_2 or NO_x pollutant concentration monitor exceeds 5.0 percent based upon the span value (or exceeds 10 ppm, for span values <200 ppm), when the calibration error of a diluent gas monitor exceeds 1.0 percent O_2 or CO_2, or when the calibration error of a flow monitor exceeds 6.0 percent based upon the span value, which is twice the applicable specification of Appendix A of this part. The out-of-control period begins with the hour of completion of the failed calibration error test and ends with the hour of completion following an effective recalibration. Whenever the failed calibration, corrective action, and effective recalibration occur within the same hour, the hour is not out of control if 2 or more valid readings are obtained during that hour as required by §75.10 of this part. A NO_x continuous emission monitoring system is considered out-of-control if either component monitor exceeds twice the applicable specification in Appendix A of this part.

An out-of-control period also occurs whenever interference of a flow monitor is identified. The out-of-control period begins with the hour of completion of the failed interference check and ends with the hour of completion of an interference check that is passed.

2.1.5 QUALITY ASSURANCE OF DATA WITH RESPECT TO DAILY ASSESSMENTS

When a monitoring system passes a daily assessment (i.e., daily calibration error test or daily flow interference check), data from that monitoring system are prospectively validated for 26 clock hours (i.e., 24 hours plus a 2-hour grace period) beginning with the hour in which the test is passed, unless another assessment (i.e. a daily calibration error test, an interference check of a flow monitor, a quarterly linearity check, a quarterly leak check, or a relative accuracy test audit) is failed within the 26-hour period.

2.1.5.1 Data Invalidation with Respect to Daily Assessments. The following specific rules apply to the invalidation of data with respect to daily assessments:

(1) Data from a monitoring system are invalid beginning with the first hour following the expiration of a 26-hour data validation period or beginning with the first hour following the expiration of an 8-hour start-up grace period (as provided under section 2.1.3.2 of this appendix) if the required subsequent daily assessment has not been conducted.

(2) Beginning on January 1, 1999, for a monitoring system that has passed the off-line calibration demonstration, if an on-line daily calibration error test of the same monitoring system is not conducted and passed within 26 unit operating hours of an off-line calibration error test that is used for data validation, then data from that monitoring system are invalid, beginning with the 27th unit operating hour following that off-line calibration error test.

2.1.5.2 Daily Assessment Start-Up Grace Period. For the purpose of quality assuring data with respect to a daily assessment (i.e. a daily calibration error test or a flow interference check), a start-up grace period may apply when a unit begins to operate after a period of non-operation. The start-up grace period for a daily calibration error test is independent of the start-up grace period for a daily flow interference check. To qualify for a start-up grace period for a daily assessment, there are two requirements:

(1) The unit must have resumed operation after being in outage for 1 or more hours (i.e., the unit must be in a start-up condition) as evidenced by a change in unit operating time from zero in one clock hour to an operating time greater than zero in the next clock hour.

(2) For the monitoring system to be used to validate data during the grace period, the previous daily assessment of the same kind must have been passed on-line within 26 clock hours prior to the last hour in which the unit operated before the outage. In addition, the monitoring system must be in-control with respect to quarterly and semi-annual or annual assessments.

If both of the above conditions are met, then a start-up grace period of up to 8 clock hours applies, beginning with the first hour of unit operation following the outage. During the start-up grace period, data generated by the monitoring system are considered quality-assured. For each monitoring system, a start-up grace period for a calibration error test or flow interference check ends when either: (1) a daily assessment of the same kind (i.e., calibration error test or flow interference check) is performed; or (2) 8 clock hours have elapsed (starting with the first hour of unit operation following the outage), whichever occurs first.

2.1.6 DATA RECORDING

Record and tabulate all calibration error test data according to month, day, clock-hour, and magnitude in either ppm, percent volume, or scfh. Program monitors that automatically adjust data to the corrected calibration values (e.g., microprocessor control) to record either: (1) The unadjusted concentration or flow rate measured in the calibration error test prior to resetting the calibration, or (2) the magnitude of any adjustment. Record the following applicable flow monitor interference check data: (1) Sample line/sensing port pluggage, and (2) malfunction of each RTD, transceiver, or equivalent.

2.2 Quarterly Assessments

For each monitor or continuous emission monitoring system, perform the following assessments during each unit operating quarter, or for monitors or monitoring systems on bypass ducts or bypass stacks, during each bypass operating quarter to be performed not less than once every 2 calendar years. This requirement is effective as of the calendar quarter following the calendar quarter in which the monitor or continuous emission monitoring system is provisionally certified.

2.2.1 LINEARITY CHECK

Perform a linearity check for each SO_2 and NO_X pollutant concentration monitor and each CO_2 or O_2 monitor at least once during each unit operating quarter or each bypass operating quarter, in accordance with the procedures in appendix A, section 6.2 of this part. For units using emission controls and other units using a low-scale span value to determine calibration gases, perform a linearity check on both the low- and high-scales. Conduct the linearity checks no less than 2 months apart, to the extent practicable.

2.2.2 LEAK CHECK

For differential pressure flow monitors, perform a leak check of all sample lines (a manual check is acceptable) at least once

during each unit operating quarter or each bypass operating quarter. Conduct the leak checks no less than 2 months apart, to the extent practicable.

2.2.3 OUT-OF-CONTROL PERIOD

An out-of-control period occurs when the error in linearity at any of the three concentrations (six for dual range monitors) in the quarterly linearity check exceeds the applicable specification in Appendix A, section 3.2 of this part. The out-of-control period begins with the hour of the failed linearity check and ends with the hour of a satisfactory linearity check following corrective action and/or monitor repair. For the NO_x continuous emission monitoring system, the system is considered out-of-control if either of the component monitors exceed the applicable specification in Appendix A, section 3.2 of this part. An out-of-control period occurs when a flow monitor sample line leak is detected. The out-of-control period begins with the hour of the failed leak check and ends with the hour of a satisfactory leak check following corrective action.

2.3 Semiannual and Annual Assessments

For each monitor or continuous emission monitoring system, perform the following assessments once semiannually (within two calendar quarters) or once annually (within four calendar quarters) after the calendar quarter in which the monitor or monitoring system was last tested, as specified below for the type of test and the performance achieved, except as provided below in section 2.3.1 of this appendix for monitors or continuous emission monitoring systems on bypass ducts or stacks or on peaking units. This requirement is effective as of the calendar quarter, unit operating quarter (for peaking units), or bypass operating quarter (for bypass stacks or ducts) following the calendar quarter in which the monitor or continuous emission monitoring system is provisionally certified. A summary chart showing the frequency with which a relative accuracy test audit must be performed, depending on the accuracy achieved, is located at the end of this appendix in Figure 2.

2.3.1 RELATIVE ACCURACY TEST AUDIT

Perform relative accuracy test audits semiannually and, to the extent practicable, no less than 4 months apart for each SO_2 or CO_2 pollutant concentration monitor, flow monitor, NO_X continuous emission monitoring system, or SO_2-diluent continuous emission monitoring systems used by units with a Phase I qualifying technology for the period during which the units are required to monitor SO_2 emission removal efficiency, from January 1, 1997 through December 31, 1999, except as provided for monitors or continuous emission monitoring systems on peaking units or bypass stacks or ducts. For monitors on bypass stacks/ducts, perform relative accuracy test audits no less than once every two successive bypass operating quarters, or once every two calendar years, whichever occurs first, in accordance with the procedures in section 6.5 of Appendix A of this part. For monitors on peaking units, perform relative accuracy test audits no less than once every two successive unit operating quarters, or once every two calendar years, whichever occurs first. Audits required under this section shall be performed no less than 4 months apart, to the extent practicable. The audit frequency may be reduced, as specified below for monitors or monitoring systems which qualify for less frequent testing.

For flow monitors, one-level and three-level relative accuracy test audits shall be performed alternately (when a flow RATA is conducted semiannually), such that the three-level relative accuracy test audit is performed at least once annually. The three-level audit shall be performed at the three different operating or load levels specified in appendix A, section 6.5.2 of this part, and the one-level audit shall be performed at the normal operating or load level. Notwithstanding that requirement, relative accuracy test audits need only be performed at the normal operating or load level for monitors and continuous emission monitoring systems on peaking units and bypass stacks/ducts.

Relative accuracy test audits may be performed on an annual basis rather than on a semiannual basis (or for monitors on peaking units and bypass ducts or bypass stacks, no less than (1) once every four successive unit or bypass operating quarters, or (2) every two calendar years, whichever occurs first) under any of the following conditions: (1) The relative accuracy during the previous audit for an SO_2 or CO_2 pollutant concentration monitor (including an O_2 pollutant monitor used to measure CO_2 using the procedures in appendix F of this part), or for a NO_X or SO_2-diluent continuous emissions monitoring system is 7.5 percent or less; (2) prior to January 1, 2000, the relative accuracy during the previous audit for a flow monitor is 10.0 percent or less at each operating level tested; (3) on and after January 1, 2000, the relative accuracy during the previous audit for a flow monitor is 7.5 percent or less at each operating level tested; (4) on low flow (≤10.0 fps) stacks/ducts, when the monitor mean, calculated using Equation A–7 in appendix A of this part is within ±1.5 fps of the reference method mean or achieves a relative accuracy of 7.5 percent (10 percent if prior to January 1, 2000) or less during the previous audit; (5) on low SO_2 emitting units (SO_2 concentrations ≤250.0 ppm, or equivalent lb/mmBtu value for SO_2-diluent continuous emission monitoring systems), when the

monitor mean is within ±8.0 ppm (or equivalent in lb/mmBtu for SO_2-diluent continuous emission monitoring systems) of the reference method mean or achieves a relative accuracy of 7.5 percent or less during the previous audit; or (6) on low NO_X emitting units (NO_X emission rate ≤0.20 lb/mmBtu), when the NO_X continuous emission monitoring system achieves a relative accuracy of 7.5 percent or less or when the monitoring system mean, calculated using Equation A–7 in appendix A of this part is within ±0.01 lb/mmBtu of the reference method mean.

A maximum of two relative accuracy test audit trials may be performed for the purpose of achieving the results required to qualify for less frequent relative accuracy test audits. Whenever two trials are performed, the results of the second (later) trial must be used in calculating both the relative accuracy and bias.

2.3.2 Out-of-Control Period

An out-of-control period occurs under any of the following conditions: (1) The relative accuracy of an SO_2, CO_2, or O_2 pollutant concentration monitor or a NO_X or SO_2-diluent continuous emission monitoring system exceeds 10.0 percent; (2) prior to January 1, 2000, the relative accuracy of a flow monitor exceeds 15.0 percent; (3) on and after January 1, 2000, the relative accuracy of a flow monitor exceeds 10.0 percent; (4) for low flow situations (≤10.0 fps), the flow monitor mean value (if applicable) exceeds ±2.0 fps of the reference method mean whenever the relative accuracy is greater than 15.0 percent for Phase I or 10 percent for Phase II; (5) for low SO_2 emitter situations, the monitor mean values exceeds ±15.0 ppm (or ± 0.03 lb/mmBtu for SO_2-diluent continuous emission monitoring systems from January 1, 1997 through December 31, 1999) of the reference method mean whenever the relative accuracy is greater than 10.0 percent; or (6) for low NO_X emitting units (NO_X emission rate ≤0.2 lb/mmBtu), the NO_X continuous emission monitoring system mean values exceed ±0.02 lb/mmBtu of the reference method mean whenever the relative accuracy is greater than 10.0 percent. For SO_2, CO_2, O_2, NO_X emission rate, and flow relative accuracy test audits performed at only one level, the out-of-control period begins with the hour of completion of the failed relative accuracy test audit and ends with the hour of completion of a satisfactory relative accuracy test audit. For a flow relative accuracy test audit at 3 operating levels, the out-of-control period begins with the hour of completion of the first failed relative accuracy test audit at any of the three operating levels, and ends with the hour of completion of a satisfactory three-level relative accuracy test audit.

Failure of the bias test does not result in the system or monitor being out-of-control.

2.3.3 Bias Adjustment Factor

2.3.3 Bias Adjustment Factor. If an SO_2 pollutant concentration monitor, flow monitor, or NO_x continuous emission monitoring system fails the bias test specified in Section 7.6 of Appendix A of this part, use the bias adjustment factor given in Equations A–11 and A–12 of Appendix A of this part to adjust the monitored data.

2.4 Other Audits

Affected units may be subject to relative accuracy test audits at any time. If a monitor or continuous emission monitoring system fails the relative accuracy test during the audit, the monitor or continuous emission monitoring system shall be considered to be out-of-control beginning with the date and time of completion of the audit, and continuing until a successful audit test is completed following corrective action. If a monitor or monitoring system fails the bias test during an audit, use the bias adjustment factor given by Equations A–11 and A–12 in Appendix A to this part to adjust the monitored data. Apply this adjustment factor from the date and time of completion of the audit until the date and time of completion of a relative accuracy test audit that does not show bias.

FIGURE 1.—QUALITY ASSURANCE TEST REQUIREMENTS

Test	QA test frequency requirements		
	Daily*	Quarterly*	Semiannual*
Calibration Error (2 pt.).	√		
Interference (flow).	√		
Leak (flow)		√	
Linearity (3 pt.)		√	
RATA (SO_2, NO_x, CO_2)[1].			√
RATA (flow, alternating 1-load and 3-load)[2].			√

* For monitors on bypass stack/duct, bypass operating days or quarters, only.

[1] Conduct annually, if monitor meets accuracy requirements to qualify for less frequent testing.

[2] Conduct 3-load RATAs annually, if requirements to qualify for less frequent testing are met.

FIGURE 2.—RELATIVE ACCURACY TEST FREQUENCY INCENTIVE SYSTEM

RATA	Semiannually[1] (percent)	Annual[1]
SO_2	RA ≤ 10	RA ≤ 7.5% or ±8.0 ppm.[2]

FIGURE 2.—RELATIVE ACCURACY TEST FREQUENCY INCENTIVE SYSTEM—Continued

RATA	Semiannually[1] (percent)	Annual[1]
NO_X	RA ≤ 10	RA ≤ 7.5% or ±0.01 lb/mmBtu.[2]
Flow (Phase I)[3]	RA ≤ 15	RA ≤ 10% or ± 1.5 fps.[2]
Flow (Phase II)[3]	RA ≤ 10	RA ≤ 7.5% or ± 1.5 fps.[2]
CO_2/O_2	RA ≤ 10	RA ≤ 7.5%.

[1] For monitors on bypass stack/duct, bypass operating quarters, not to exceed two calendar years. For monitors on peaking units, unit operating quarters, not to exceed two calendar years.
[2] The difference between monitor and reference method mean values; low emitters or low flow, only.
[3] Conduct 3-load RATAs annually, if requirements to qualify for less frequent testing are met.

[58 FR 3701, Jan. 11, 1993, as amended at 60 FR 26546, 26571, May 17, 1995; 61 FR 59165, Nov. 20, 1996]

APPENDIX C TO PART 75—MISSING DATA ESTIMATION PROCEDURES

1. PARAMETRIC MONITORING PROCEDURE FOR MISSING SO_2 Concentration or NO_X EMISSION RATE DATA

1.1 Applicability

The owner or operator of any affected unit equipped with post-combustion SO_2 or NO_x emission controls and SO_2 pollutant concentration monitors and/or NO_x continuous emission monitoring systems at the inlet and outlet of the emission control system may apply to the Administrator for approval and certification of a parametric, empirical, or process simulation method or model for calculating substitute data for missing data periods. Such methods may be used to parametrically estimate the removal efficiency of the SO_2 of postcombustion NO_x emission controls which, with the monitored inlet concentration or emission rate data, may be used to estimate the average concentration of SO_2 emissions or average emission rate of NO_x discharged to the atmosphere. After approval by the Administrator, such method or model may be used for filling in missing SO_2 concentration or NO_x emission rate data when data from the outlet SO_2 pollutant concentration monitor or outlet NO_x continuous emission monitoring system have been reported with an annual monitor data availability of 90.0 percent or more.

Base the empirical and process simulation methods or models on the fundamental chemistry and engineering principles involved in the treatment of pollutant gas. On a case-by-case basis, the Administrator may pre-certify commercially available process simulation methods and models.

1.2 Petition Requirements

Continuously monitor, determine, and record hourly averages of the estimated SO_2 or NO_X removal efficiency and of the parameters specified below, at a minimum. The affected facility shall supply additional parametric information where appropriate. Measure the SO_2 concentration or NO_X emission rate, removal efficiency of the add-on emission controls, and the parameters for at least 2160 unit operating hours. Provide information for all expected operating conditions and removal efficiencies. At least 4 evenly spaced data points are required for a valid hourly average, except during periods of calibration, maintenance, or quality assurance activities, during which 2 data points per hour are sufficient. The Administrator will review all applications on a case-by-case basis.

1.2.1 Parameters for Wet Flue Gas Desulfurization System

1.2.1.1 Number of scrubber modules in operation.

1.2.1.2 Total slurry rate to each scrubber module (gal per min).

1.2.1.3 In-line absorber pH of each scrubber module.

1.2.1.4 Pressure differential across each scrubber module (inches of water column).

1.2.1.5 Unit load (MWe).

1.2.1.6 Inlet and outlet SO_2 concentration as determined by the monitor or missing data substitution procedures.

1.2.1.7 Percent solids in slurry for each scrubber module.

1.2.1.8 Any other parameters necessary to verify scrubber removal efficiency, if the Administrator determines the parameters above are not sufficient.

1.2.2 Parameters for Dry Flue Gas Desulfurization System

1.2.2.1 Number of scrubber modules in operation.

1.2.2.2 Atomizer slurry flow rate to each scrubber module (gal per min).

1.2.2.3 Inlet and outlet temperature for each scrubber module (°F).

1.2.2.4 Pressure differential across each scrubber module (inches of water column).

1.2.2.5 Unit load (MWe).

1.2.2.6 Inlet and outlet SO_2 concentration as determined by the monitor or missing data substitution procedures.

1.2.2.7 Any other parameters necessary to verify scrubber removal efficiency, if the Administrator determines the parameters above are not sufficient.

1.2.3 PARAMETERS FOR OTHER FLUE GAS DESULFURIZATION SYSTEMS

If SO_2 control technologies other than wet or dry lime or limestone scrubbing are selected for flue gas desulfurization, a corresponding empirical correlation or process simulation parametric method using appropriate parameters may be developed by the owner or operator of the affected unit, and then reviewed and approved or modified by the Administrator on a case-by-case basis.

1.2.4 PARAMETERS FOR POST-COMBUSTION NO_x EMISSION CONTROLS

1.2.4.1 Inlet air flow rate to the unit (boiler) (mcf/hr).

1.2.4.2 Excess oxygen concentration of flue gas at stack outlet (percent).

1.2.4.3 Carbon monoxide concentration of flue gas at stack outlet (ppm).

1.2.4.4 Temperature of flue gas at outlet of the unit (°F).

1.2.4.5 Inlet and outlet NO_x emission rate as determined by the NO_x continuous emission monitoring system or missing data substitution procedures.

1.2.4.6 Any other parameters specific to the emission reduction process necessary to verify the NO_x control removal efficiency, (e.g., reagent feedrate in gal/mi).

1.3 Correlation of Emissions With Parameters

Establish a method for correlating hourly averages of the parameters identified above with the percent removal efficiency of the SO_2 or post-combustion NO_X emission controls under varying unit operating loads. Equations 1–7 in §75.15 may be used to estimate the percent removal efficiency of the SO_2 emission controls on an hourly basis.

Each parametric data substitution procedure should develop a data correlation procedure to verify the performance of the SO_2 emission controls or post-combustion NO_x emission controls, along with the SO_2 pollutant concentration monitor and NO_x continuous emission monitoring system values for varying unit load ranges.

For NO_x emission rate data, and wherever the performance of the emission controls varies with the load, use the load range procedure provided in section 2.2 of this appendix.

1.4 Calculations

1.4.1 Use the following equation to calculate substitute data for filling in missing (outlet) SO_2 pollutant concentration monitor data.

$$M_o = I_c (1–E)$$
(Eq. C–1)

where,

M_o = Substitute data for outlet SO_2 concentration, ppm.

I_c = Recorded inlet SO_2 concentration, ppm.

E = Removal efficiency of SO_2 emission controls as determined by the correlation procedure described in section 1.3 of this appendix.

1.4.2 Use the following equation to calculate substitute data for filling in missing (outlet) NO_x emission rate data.

$$M_o = I_c (1–E)$$
(Eq. C–2)

where,

M_o = Substitute data for outlet NO_x emission rate, lb/mmBtu.

I_c = Recorded inlet NO_x emission rate, lb/mmBtu.

E = Removal efficiency of post-combustion NO_x emission controls determined by the correlation procedure described in section 1.3 of this appendix.

1.5 Missing Data

1.5.1 If both the inlet and the outlet SO_2 pollutant concentration monitors are unavailable simultaneously, use the maximum inlet SO_2 concentration recorded by the inlet SO_2 pollutant concentration monitor during the previous 720 quality assured monitor operating hours to substitute for the inlet SO_2 concentration in Equation C–1 of this appendix.

1.5.2 If both the inlet and outlet NO_x continuous emission monitoring systems are unavailable simultaneously, use the maximum inlet NO_x emission rate for the corresponding unit load recorded by the NO_x continuous emission monitoring system at the inlet during the previous 2160 quality assured monitor operating hours to substitute for the inlet NO_x emission rate in Equation C–2 of this Appendix.

1.6 Application

Apply to the Administrator for approval and certification of the parametric substitution procedure for filling in missing SO_2 concentration or NO_x emission rate data using the established criteria and information identified above. DO not use this procedure until approved by the Administrator.

2. LOAD-BASED PROCEDURE FOR MISSING FLOW RATE AND NO_x EMISSION RATE DATA

2.1 Applicability

This procedure is applicable for data from all affected units for use in accordance with the provisions of this part to provide substitute data for volumetric flow (scfh) and NO_x emission rate (in lb/mmBtu).

2.2 Procedure

2.2.1 For a single unit, establish 10 operating load ranges defined in terms of percent of the maximum hourly gross load of the unit, in gross megawatts (MWge), as shown in

Table C–1. For units sharing a common stack monitored with a single flow monitor, the load ranges for flow (but not for NO_X) may be broken down into 20 equally-sized operating load ranges in increments of 5 percent of the combined maximum hourly gross load of all units utilizing the common stack. For a cogenerating unit or other unit at which some portion of the heat input is not used to produce electricity or for a unit for which hourly gross load in MWge is not recorded separately, use the hourly gross steam load of the unit, in pounds of steam per hour at the measured temperature (°F) and pressure (psia) instead of MWge. Indicate a change in the number of load ranges or the units of loads to be used in the precertification section of the monitoring plan.

TABLE C–1.—DEFINITION OF OPERATING LOAD RANGES FOR LOAD-BASED SUBSTITUTION DATA PROCEDURES

Operating load range	Percent of maximum hourly gross load (%)
1	0–10
2	10–20
3	20–30
4	30–40
5	40–50
6	50–60
7	60–70
8	70–80
9	80–90
10	90–100

2.2.2 Beginning with the first hour of unit operation after installation and certification of the flow monitor or the NO_x continuous emission monitoring system, for each hour of unit operation record a number, 1 through 10 (or 1 through 20 for flow at common stacks), that identifies the operating load range corresponding to the integrated hourly gross load of the unit(s) recorded for each unit operating hour.

2.2.3 Beginning with the first hour of unit operation after installation and certification of the flow monitor or the NO_X continuous emission monitoring system and continuing thereafter, the data acquisition and handling system must be capable of calculating and recording the following information for each unit operating hour of missing flow or NO_X data within each identified load range during the shorter of: (1) the previous 2,160 quality assured monitor operating hours (on a rolling basis), or (2) all previous quality assured monitor operating hours.

2.2.3.1 Average of the hourly flow rates reported by a flow monitor, in scfh.

2.2.3.2 The 90th percentile value of hourly flow rates, in scfh.

2.2.3.3 The 95th percentile value of hourly flow rates, in scfh.

2.2.3.4 The maximum value of hourly flow rates, in scfh.

2.2.3.5 Average of the hourly NO_X emission rate, in lb/mmBtu, reported by a NO_X continuous emission monitoring system.

2.2.3.6 The 90th percentile value of hourly NO_x emission rates, in lb/mmBtu.

2.2.3.7 The 95th percentile value of hourly NO_x emission rates, in lb/mmBtu.

2.2.3.8 The maximum value of hourly NO_x emission rates, in lb/mmBtu.

2.2.4 Calculate all monitor or continuous emission monitoring system data averages, maximum values, and percentile values determined by this procedure using bias adjusted values in the load ranges.

2.2.5 When a bias adjustment is necessary for the flow monitor and/or the NO_X continuous emission monitoring system, apply the adjustment factor to all monitor or continuous emission monitoring system data values placed in the load ranges.

2.2.6 Use the calculated monitor or monitoring system data averages, maximum values, and percentile values to substitute for missing flow rate and NO_x emission rate data according to the procedures in subpart D of this part.

[58 FR 3701, Jan. 11, 1993, as amended at 60 FR 26547, 26548, May 17, 1995]

APPENDIX D TO PART 75—OPTIONAL SO_2 EMISSIONS DATA PROTOCOL FOR GAS-FIRED AND OIL-FIRED UNITS

1. APPLICABILITY

1.1 This protocol may be used in lieu of continuous SO_2 pollutant concentration and flow monitors for the purpose of determining hourly SO_2 emissions and heat input from: (1) gas-fired units as defined in §72.2 of this chapter; or (2) oil-fired units as defined in §72.2 of this chapter. This optional SO_2 emissions data protocol contains procedures for conducting oil sampling and analysis in section 2.2 of this appendix; the procedures for flow proportional oil sampling and the procedures for manual daily oil sampling may be used for any gas-fired unit or oil-fired unit. In addition, this optional SO_2 emissions data protocol contains two procedures for determining SO_2 emissions due to the combustion of gaseous fuels; these two procedures may be used for any gas-fired unit or oil-fired unit.

1.2 Pursuant to the procedures in §75.20, complete all testing requirements to certify use of this protocol in lieu of a flow monitor and an SO_2 continuous emission monitoring system. Complete all testing requirements no later than the applicable deadline specified in §75.4. Apply to the Administrator for initial certification to use this protocol no later than 45 days after the completion of all certification tests. Whenever the monitoring

method is to be changed, reapply to the Administrator for recertification of the new monitoring method.

2. PROCEDURE

2.1 Flowmeter Measurements

For each hour when the unit is combusting fuel, measure and record the flow of fuel combusted by the unit, except as provided for gas in section 2.1.4 of this appendix. Measure the flow of fuel with an in-line fuel flowmeter and automatically record the data with a data acquisition and handling system, except as provided in section 2.1.4 of this appendix.

2.1.1 Measure the flow of each fuel entering and being combusted by the unit. If a portion of the flow is diverted from the unit without being burned, and that diversion occurs downstream of the fuel flowmeter, an additional in-line fuel flowmeter is required to account for the unburned fuel. Record the flow of each fuel combusted by the unit as the difference between the flow measured in the pipe leading to the unit and the flow in the pipe diverting fuel away from the unit.

2.1.2 Install and use fuel flowmeters meeting the requirements of this appendix in a pipe going to each unit, or install and use a fuel flowmeter in a common pipe header (i.e., a pipe carrying fuel for multiple units). If the flowmeter is installed in a common pipe header, do one of the following:

2.1.2.1 Measure the fuel flow in the common pipe and combine SO_2 mass emissions for the affected units for recordkeeping and compliance purposes; or

2.1.2.2 Provide information satisfactory to the Administrator on methods for apportioning SO_2 mass emissions and heat input to each of the affected units demonstrating that the method ensures complete and accurate accounting of all emissions regulated under this part. The information shall be provided to the Administrator through a petition submitted by the designated representative under §75.66. Satisfactory information includes apportionment using fuel flow measurements, the ratio of load (in MWe) in each unit to the total load for all units receiving fuel from the common pipe header, or the ratio of steam flow (in 1000 lb/hr) at each unit to the total steam flow for all units receiving fuel from the common pipe header.

2.1.3 For a gas-fired unit or an oil-fired unit that continuously or frequently combusts a supplemental fuel for flame stabilization or safety purposes, measure the flow of the supplemental fuel with a fuel flowmeter meeting the requirements of this appendix.

2.1.4 For an oil-fired unit that uses gas solely for start-up or burner ignition or a gas-fired unit that uses oil solely for start-up or burner ignition a flowmeter for the start-up fuel is not required. Estimate the volume of oil combusted for each start-up or ignition, either by using a fuel flowmeter or by using the dimensions of the storage container and measuring the depth of the fuel in the storage container before and after each start-up or ignition. A fuel flowmeter used solely for start-up or ignition fuel is not subject to the calibration requirements of section 2.1.5 and 2.1.6 of this appendix. Gas combusted solely for start-up or burner ignition does not need to be measured separately.

2.1.5 Each fuel flowmeter used to meet the requirements of this protocol shall meet a flowmeter accuracy of ±2.0 percent of the upper range value (i.e, maximum calibrated fuel flow rate), either by design or as calibrated and as measured under laboratory conditions by the manufacturer, by an independent laboratory, or by the owner or operator. The flowmeter accuracy must include all error from all parts of the fuel flowmeter being calibrated based upon the contribution to the error in the flowrate.

2.1.5.1 Use the procedures in the following standards for flowmeter calibration or flowmeter design, as appropriate to the type of flowmeter: ASME MFC–3M–1989 with September 1990 Errata (''Measurement of Fluid Flow in Pipes Using Orifice, Nozzle, and Venturi''), ASME MFC–4M–1986 (Reaffirmed 1990), ''Measurement of Gas Flow by Turbine Meters,'' American Gas Association Report No. 3, ''Orifice Metering of Natural Gas and Other Related Hydrocarbon Fluids Part 1: General Equations and Uncertainty Guidelines'' (October 1990 Edition), Part 2: ''Specification and Installation Requirements'' (February 1991 Edition) and Part 3: ''Natural Gas Applications'' (August 1992 edition), (excluding the modified flow-calculation method in Part 3), Section 8, Calibration from American Gas Association Transmission Measurement Committee Report No. 7: Measurement of Gas by Turbine Meters (1985 Edition), ASME MFC–5M–1985 (''Measurement of Liquid Flow in Closed Conduits Using Transit-Time Ultrasonic Flowmeters''), ASME MFC–6M–1987 with June 1987 Errata (''Measurement of Fluid Flow in Pipes Using Vortex Flow Meters''), ASME MFC–7M–1987 (Reaffirmed 1992), ''Measurement of Gas Flow by Means of Critical Flow Venturi Nozzles,'' ISO 8316: 1987(E) ''Measurement of Liquid Flow in Closed Conduits—Method by Collection of the Liquid in a Volumetric Tank,'' or MFC–9M–1988 with December 1989 Errata (''Measurement of Liquid Flow in Closed Conduits by Weighing Method'') for all other flow meter types (incorporated by reference under §75.6 of this part). The Administrator may also approve other procedures that use equipment traceable to National Institute of Standards and Technology standards. Document other procedures, the equipment used, and the accuracy of the procedures in the monitoring plan for the unit and a petition submitted by

the designated representative under §75.66(c). If the flowmeter accuracy exceeds ±2.0 percent of the upper range value, the flowmeter does not qualify for use under this part.

2.1.5.2 Alternatively, a fuel flowmeter used for the purposes of this part may be calibrated or recalibrated at least annually (or, for fuel flowmeters measuring emergency fuel, backup fuel or fuel usage of peaking units, every four calendar quarters when the unit combusts the fuel measured by the fuel flowmeter) by comparing the measured flow of a flowmeter to the measured flow from another flowmeter which has been calibrated or recalibrated during the previous 365 days using a standard listed in section 2.1.5 of this appendix or other procedure approved by the Administrator under §75.66. Any secondary elements, such as pressure and temperature transmitters, must be calibrated immediately prior to the comparison. Perform the comparison over a period of no more than seven consecutive unit operating days. Compare the average of three fuel flow readings for each meter at each of three different flow levels, corresponding to (1) normal full operating load, (2) normal minimum operating load, and (3) a load point approximately equally spaced between the full and minimum operating loads. Calculate the flowmeter accuracy at each of the three flow levels using the following equation:

$$ACC = \frac{|R-A|}{URV} \times 100 \qquad \text{(Eq. D–1)}$$

Where:

ACC=Flow meter accuracy as a percentage of the upper range value, including all error from all parts of both flowmeters.

R=Average of the three flow measurements of the reference flow meter.

A=Average of the three measurements of the flow meter being tested.

URV=Upper range value of fuel flow meter being tested (i.e. maximum measurable flow).

If the flow meter accuracy exceeds ±2.0 percent of the upper range value at any of the three flow levels, either recalibrate the flow meter until the accuracy is within the performance specification, or replace the flow meter with another one that is within the performance specification. Notwithstanding the requirement for annual calibration of the reference flowmeter, if a reference flowmeter and the flowmeter being tested are within ±1.0 percent of the flowrate of each other during all in-place calibrations in a calendar year, then the reference flowmeter does not need to be calibrated before the next in-place calibration. This exception to calibration requirements for the reference flowmeter may be extended for periods up to five calendar years.

2.1.6 QUALITY ASSURANCE

2.1.6.1 Recalibrate each fuel flowmeter to a flowmeter accuracy of ±2.0 percent of the upper range value prior to use under this part at least annually (or, for fuel flowmeters measuring emergency fuel, backup fuel or fuel usage of peaking units, every four calendar quarters when the unit combusts the fuel measured by the fuel flowmeter), or more frequently if required by manufacturer specifications. Perform the recalibration using the procedures in section 2.1.5 of this appendix. For orifice-, nozzle-, and venturi-type flowmeters, also recalibrate the flowmeter the following calendar quarter using the procedures in section 2.1.6.2 of this appendix, whenever the fuel flowmeter accuracy during a calibration or test is greater than ±1.0 percent of the upper range value, or whenever a visual inspection of the orifice, nozzle, or venturi identifies corrosion since the previous visual inspection.

2.1.6.2 For orifice-, nozzle-, and venturi-type flowmeters that are designed according to the standards in section 2.1.5 of this appendix, satisfy the calibration requirements of this appendix by calibrating the differential pressure transmitter or transducer, static pressure transmitter or transducer, and temperature transmitter or transducer, as applicable, using equipment that has a current certificate of traceability to NIST standards. In addition, conduct a visual inspection of the orifice, nozzle, or venturi at least annually.

2.2 Oil Sampling and Analysis

Perform sampling and analysis of as-fired oil to determine the percentage of sulfur by weight in the oil.

2.2.1 When combusting diesel fuel, sample the diesel fuel either (1) every day the unit combusts diesel fuel, or (2) upon receipt of a shipment of diesel fuel.

2.2.1.1 If the diesel fuel is sampled every day, use either the flow proportional method described in section 2.2.3 of this appendix or the daily manual method described in section 2.2.4 of this appendix.

2.2.1.2 If the diesel fuel is sampled upon delivery, calculate SO_2 emissions using the highest sulfur content of any oil supply combusted in the previous 30 days that the unit combusted oil. Diesel fuel sampling and analysis may be performed either by the owner or operator of an affected unit, an outside laboratory, or a fuel supplier, provided that sampling is performed according to ASTM D4057–88, ''Standard Practice for Manual Sampling of Petroleum and Petroleum Products'' (incorporated by reference under §75.6 of this part).

2.2.2 Perform oil sampling every day the unit is combusting oil except as provided for diesel fuel. Use either the flow proportional

method described in section 2.2.3 of this appendix or the daily manual method described in section 2.2.4 of this appendix.

2.2.3 Conduct flow proportional oil sampling or continuous drip oil sampling in accordance with ASTM D4177–82 (Reapproved 1990), ''Standard Practice for Automatic Sampling of Petroleum and Petroleum Products'' (incorporated by reference under §75.6), every day the unit is combusting oil. Extract oil at least once every hour and blend into a daily composite sample. The sample composite period may not exceed 24 hr.

2.2.4 Representative as-fired oil samples may be taken manually every day that the unit combusts oil according to ASTM D4057–88, ''Standard Practice for Manual Sampling of Petroleum and Petroleum Products'' (incorporated by reference under §75.6), provided that the highest fuel sulfur content recorded at that unit from the most recent 30 daily samples is used for the purposes of calculating SO_2 emissions under section 3 of this appendix. Use the gross calorific value measured from that day's sample to calculate heat input. If oil supplies with different sulfur contents are combusted on the same day, sample the highest sulfur fuel combusted that day.

NOTE: For units with pressurized fuel flow lines such as some diesel and dual-fuel reciprocating internal combustion engine units, a manual sample may be taken from the point closest to the unit where it is safe to take a sample (including back to the oil tank), rather than just prior to entry to the boiler or combustion chamber. As-delivered manual samples of diesel fuel need not be as-fired.

2.2.5 Split and label each oil sample. Maintain a portion (at least 200 cc) of each sample throughout the calendar year and in all cases for not less than 90 calendar days after the end of the calendar year allowance accounting period. Analyze oil samples for percent sulfur content by weight in accordance with ASTM D129–91, ''Standard Test Method for Sulfur in Petroleum Products (General Bomb Method),'' ASTM D1552–90, ''Standard Test Method for Sulfur in Petroleum Products (High Temperature Method),'' ASTM D2622–92, ''Standard Test Method for Sulfur in Petroleum Products by X-Ray Spectrometry,'' or ASTM D4294–90, ''Standard Test Method for Sulfur in Petroleum Products by Energy-Dispersive X-Ray Fluorescence Spectroscopy'' (incorporated by reference under §75.6).

2.2.6 Where the flowmeter records volumetric flow rather than mass flow, analyze oil samples to determine the density or specific gravity of the oil. Determine the density or specific gravity of the oil sample in accordance with ASTM D287–82 (Reapproved 1991), ''Standard Test Method for API Gravity of Crude Petroleum and Petroleum Products (Hydrometer Method),'' ASTM D941–88, ''Standard Test Method for Density and Relative Density (Specific Gravity) of Liquids by Lipkin Bicapillary Pycnometer,'' ASTM D1217–91, ''Standard Test Method for Density and Relative Density (Specific Gravity) of Liquids by Bingham Pycnometer,'' ASTM D1481–91, ''Standard Test Method for Density and Relative Density (Specific Gravity) of Viscous Materials by Lipkin Bicapillary,'' ASTM D1480–91, ''Standard Test Method for Density and Relative Density (Specific Gravity) of Viscous Materials by Bingham Pycnometer,'' ASTM D1298–85 (Reapproved 1990), ''Standard Practice for Density, Relative Density (Specific Gravity) or API Gravity of Crude Petroleum and Liquid Petroleum Products by Hydrometer Method,'' or ASTM D4052–91, ''Standard Test Method for Density and Relative Density of Liquids by Digital Density Meter'' (incorporated by reference under §75.6).

2.2.7 Analyze oil samples to determine the heat content of the fuel. Determine oil heat content in accordance with ASTM D240–87 (Reapproved 1991), ''Standard Test Method for Heat of Combustion of Liquid Hydrocarbon Fuels by Bomb Calorimeter,'' ASTM D2382–88, ''Standard Test Method for Heat or Combustion of Hydrocarbon Fuels by Bomb Calorimeter (High-Precision Method)'', or ASTM D2015–91, ''Standard Test Method for Gross Calorific Value of Coal and Coke by the Adiabatic Bomb Calorimeter'' (incorporated by reference under §75.6) or any other procedures listed in section 5.5 of appendix F of this part.

2.2.8 Results from the oil sample analysis must be available no later than thirty calendar days after the sample is composited or taken. However, during an audit, the Administrator may require that the results of the analysis be available within 5 business days, or sooner if practicable.

2.3 SO_2 Emissions from Combustion of Gaseous Fuels

Account for the hourly SO_2 mass emissions due to combustion of gaseous fuels for each day when gaseous fuels are combusted by the unit using the procedures in either section 2.3.1 or 2.3.2.

2.3.1 Sample the gaseous fuel daily.

2.3.1.1 Analyze the sulfur content of the gaseous fuel in grain/100 scf using ASTM D1072–90, ''Standard Test Method for Total Sulfur in Fuel Gases'', ASTM D4468–85 (Reapproved 1989) ''Standard Test Method for Total Sulfur in Gaseous Fuels by Hydrogenolysis and Rateometric Colorimetry,'' ASTM D5504–94 ''Standard Test Method for Determination of Sulfur Compounds in Natural Gas and Gaseous Fuels by Gas Chromatography and Chemiluminescence,'' or ASTM D3246–81 (Reapproved 1987) ''Standard Test Method for Sulfur in Petroleum Gas By Oxidative Microcoulometry'' (incorporated

by reference under §75.6). The test may be performed by the owner or operator, an outside laboratory, or the gas supplier.

2.3.1.2 Results from the analysis must be available on-site no later than thirty calendar days after the sample is taken.

2.3.1.3 Determine the heat content or gross calorific value for at least one sample each month and use the procedures of section 5.5 of appendix F of this part to determine the heat input for each hour the unit combusted gaseous fuel.

2.3.1.4 Multiply the sulfur content by the hourly metered volume of gas combusted in 100 scf, using Equation D–4 of this appendix.

2.3.2 If the fuel is pipeline natural gas, calculate SO_2 emissions using a default SO_2 emission rate of 0.0006 lb/mmBtu.

2.3.2.1 Use the default SO_2 emission rate of 0.0006 lb/mmBtu and the hourly heat input from pipeline natural gas in mmBtu/hr, as determined using the procedures in section 5.5 of appendix F of this part. Calculate SO_2 emissions using Equation D–5 of this appendix.

2.3.2.2 Provide information on the contractual sulfur content from the pipeline gas supplier in the monitoring plan for the unit, demonstrating that the gas has a hydrogen sulfide content of 1 grain/100 scf or less, and a total sulfur content of 20 grain/100 scf or less.

2.4 Missing Data Procedures.

When data from the procedures of this part are not available, provide substitute data using the following procedures.

2.4.1 When sulfur content or oil density data from the analysis of an oil sample or when sulfur content data from the analysis of a gaseous fuel sample are missing or invalid, substitute, as applicable, the highest measured sulfur content or oil density (if using a volumetric oil flowmeter) recorded during the previous 30 days when the unit burned that fuel. If no previous sulfur content data are available, substitute the maximum potential sulfur content of that fuel.

2.4.2 When gross calorific value data from the analysis of an oil sample are missing or invalid, substitute the highest measured gross calorific value recorded during the previous 30 days that the unit burned oil. When gross calorific value data from the analysis of a monthly gaseous fuel sample are missing or invalid, substitute the highest measured gross calorific value recorded during the previous three months that the unit burned gaseous fuel.

2.4.3 Whenever data are missing from any fuel flowmeter that is part of an excepted monitoring system under appendix D or E of this part, where the fuel flowmeter data are required to determine the amount of fuel combusted by the unit, use the procedures in either section 2.4.3.1 or sections 2.4.3.2 and 2.4.3.3 prior to January 1, 1996 and use the procedures in sections 2.4.3.2 and 2.4.3.3 but do not use the procedures in section 2.4.3.1 on or after January 1, 1996 to account for the flow rate of fuel combusted at the unit for each hour during the missing data period.

2.4.3.1 [Reserved]

2.4.3.2 For hours where only one fuel is combusted, substitute for each hour in the missing data period the average of the hourly fuel flow rate(s) measured and recorded by the fuel flowmeter (or flowmeters, where fuel is recirculated) at the corresponding operating unit load range recorded for each missing hour during the previous 720 hours during which the unit combusted that same fuel only. Establish load ranges for the unit using the procedures of section 2 in appendix C of this part for missing volumetric flow rate data. If no fuel flow rate data are available at the corresponding load range, use data from the next higher load range where data are available. If no fuel flow rate data are available at either the corresponding load range or a higher load range during any hour of the missing data period for that fuel, substitute the maximum potential fuel flow rate. The maximum potential fuel flow rate is the lesser of the following: (1) the maximum fuel flow rate the unit is capable of combusting or (2) the maximum flow rate that the flowmeter can measure.

2.4.3.3 For hours where two or more fuels are combusted, substitute the maximum hourly fuel flow rate measured and recorded by the flowmeter (or flowmeters, where fuel is recirculated) for the fuel for which data are missing at the corresponding load range recorded for each missing hour during the previous 720 hours when the unit combusted that fuel with any other fuel. For hours where no previous recorded fuel flow rate data are available for that fuel during the missing data period, calculate and substitute the maximum potential flow rate of that fuel for the unit as defined in section 2.4.3.2 of this appendix.

2.4.4. In any case where the missing data provisions of this section require substitution of data measured and recorded more than three years (26,280 clock hours) prior to the date and time of the missing data period, use three years (26,280 clock hours) in place of the prescribed lookback period.

3. CALCULATIONS

Use the calculation procedures in section 3.1 of this appendix to calculate SO_2 mass emissions. Where an oil flowmeter records volumetric flow, use the calculation procedures in section 3.2 of this appendix to calculate mass flow of oil. Calculate hourly SO_2 mass emissions from gaseous fuel using the procedures in section 3.3 of this appendix. Calculate hourly heat input for oil and for gaseous fuel using the equations in section 5.5 of Appendix F of this part. Calculate total

SO_2 mass emissions and heat input as provided under section 3.4 of this appendix.

3.1 SO_2 Mass Emissions Calculation for Oil

3.1.1 Use the following equation to calculate SO_2 mass emissions per hour (in lb/hr).

$M_{so2}=2.0\times M_{oil}\times\%S_{oil}/100.0$

(Eq. D–2)

Where:

M_{SO2}=Hourly mass of SO_2 emitted from combustion of oil, lb/hr.

M_{oil}=Mass of oil consumed per hr, lb/hr.

$\%S_{oil}$=Percentage of sulfur by weight measured in the sample.

2.0=Ratio of lb SO_2/lb S.

3.1.2 Record the SO_2 mass emissions from oil for each hour that oil is combusted.

3.2 Mass Flow Calculation for Oil Using Volumetric Flow

3.2.1 Where the oil flowmeter records volumetric flow rather than mass flow, calculate and record the oil mass flow for each hourly period using hourly oil flow measurements and the density or specific gravity of the oil sample.

3.2.2 Convert density, specific gravity, or API gravity of the oil sample to density of the oil sample at the sampling location's temperature using ASTM D1250–80 (Reapproved 1990), ''Standard Guide for Petroleum Measurement Tables'' (incorporated by reference under §75.6 of this part).

3.2.3 Where density of the oil is determined by the applicable ASTM procedures from section 2.2.5 of this appendix, use the following equation to calculate the mass of oil consumed (in lb/hr).

$M_{oil}=V_{oi1}\times D_{oil}$

(Eq. D–3)

where,

M_{oil}=Mass of oil consumed per hr, lb/hr.

V_{oil}=Volume of oil consumed per hr, measured in scf, gal, barrels, or m^3.

D_{oil}=Density of oil, measured in lb/scf, lb/gal, lb/barrel, or lb/m^3.

3.2.4 Calculate the hourly heat input to the unit from oil (mmBtu) by multiplying the heat content of the daily oil sample by the hourly oil mass.

3.3 SO_2 Mass Emissions Calculation for Gaseous Fuels

3.3.1 Use the following equation to calculate the SO_2 emissions using the gas sampling and analysis procedures in section 2.3.1 of this appendix:

$$M_{SO_2g}=\left(\frac{2.0}{7000}\right)\times Q_g\times S_g \qquad \text{(Eq. D–4)}$$

Where:

M_{SO2g}=Hourly mass of SO_2 emitted due to combustion of gaseous fuel, lb/hr.

Q_g=Hourly metered flow or amount of gaseous fuel combusted, 100 scf/hr.

S_g=Sulfur content of gaseous fuel, in grain/100 scf.

2.0=Ratio of lb SO_2/lb S.

7000=Conversion of grains/100 scf to lb/100 scf.

3.3.2 Use the following equation to calculate the SO_2 emissions using the 0.0006 lb/mmBtu emission rate in section 2.3.2 of this appendix:

$$M_{SO_2g}=ER\times HI_g \qquad \text{(Eq. D–5)}$$

Where:

M_{SO2g}=Hourly mass of SO_2 emissions from combustion of pipeline natural gas, lb/hr.

ER=SO_2 emission rate of 0.0006 lb/mmBtu for pipeline natural gas.

HI_g=Hourly heat input of pipeline natural gas, calculated using procedures in appendix F of this part, in mmBtu/hr.

3.3.3 Record the SO_2 mass emissions for each hour when the unit combusts gaseous fuel.

3.4 Records and Reports

Calculate and record quarterly and cumulative SO_2 mass emissions and heat input for each calendar quarter and for the calendar year by summing the hourly values. Calculate and record SO_2 emissions and heat input data using a data acquisition and handling system. Report these data in a standard electronic format specified by the Administrator.

[58 FR 3701, Jan. 11, 1993, as amended at 60 FR 26548, 26551, May 17, 1995; 61 FR 25585, May 22, 1996; 61 FR 59166, Nov. 20, 1996]

APPENDIX E TO PART 75—OPTIONAL NO_x EMISSIONS ESTIMATION PROTOCOL FOR GAS-FIRED PEAKING UNITS AND OIL-FIRED PEAKING UNITS

1. APPLICABILITY

1.1 Unit Operation Requirements

This NO_X emissions estimation procedure may be used in lieu of a continuous NO_X emission monitoring system (lb/mmBtu) for determining the average NO_X emission rate and hourly NO_X rate from gas-fired peaking units and oil-fired peaking units as defined in §72.2 of this chapter. If a unit's operations exceed the levels required to be a peaking unit, install and certify a continuous NO_X emission monitoring system no later than December 31 of the following calendar year. The provisions of §75.12 apply to excepted monitoring systems under this appendix.

1.2 Certification

1.2.1 Pursuant to the procedures in §75.20, complete all testing requirements to certify use of this protocol in lieu of a NO_X continuous emission monitoring system no later than the applicable deadline specified in §75.4. Apply to the Administrator for certification to use this method no later than 45 days after the completion of all certification testing. Whenever the monitoring method is to be changed, reapply to the Administrator for certification of the new monitoring method.

1.2.2 If the owner or operator has already successfully completed certification testing of the unit using the protocol of appendix E of part 75 and submitted a certification application under §75.20(g) prior to _____ July 17, 1995, the unit's monitoring system does not need to repeat initial certification testing using the revised procedures published _____ May 17, 1995.

2. PROCEDURE

2.1 Initial Performance Testing

Use the following procedures for: measuring NO_X emission rates at heat input rate levels corresponding to different load levels; measuring heat input rate; and plotting the correlation between heat input rate and NO_X emission rate, in order to determine the emission rate of the unit(s).

2.1.1 LOAD SELECTION

Establish at least four approximately equally spaced operating load points, ranging from the maximum operating load to the minimum operating load. Select the maximum and minimum operating load from the operating history of the unit during the most recent two years. (If projections indicate that the unit's maximum or minimum operating load during the next five years will be significantly different from the most recent two years, select the maximum and minimum operating load based on the projected dispatched load of the unit.) For new gas-fired peaking units or new oil-fired peaking units, select the maximum and minimum operating load from the expected maximum and minimum load to be dispatched to the unit in the first five calendar years of operation.

2.1.2 NO_X AND O_2 CONCENTRATION MEASUREMENTS

Use the following procedures to measure NO_X and O_2 concentration in order to determine NO_X emission rate.

2.1.2.1 For boilers, select an excess O_2 level for each fuel (and, optionally, for each combination of fuels) to be combusted that is representative for each of the four or more load levels. If a boiler operates using a single, consistent combination of fuels only, the testing may be performed using the combination rather than each fuel. If a fuel is combusted only for the purpose of testing ignition of the burners for a period of five minutes or less per ignition test or for start-up, then the boiler NO_X emission rate does not need to be tested separately for that fuel. Operate the boiler at a normal or conservatively high excess oxygen level in conjunction with these tests. Measure the NO_X and O_2 at each load point for each fuel or consistent fuel combination (and, optionally, for each combination of fuels) to be combusted. Measure the NO_X and O_2 concentrations according to Method 7E and 3A in appendix A of part 60 of this chapter. Select sampling points as specified in section 5.1, Method 3 in appendix A of part 60 of this chapter. The designated representative for the unit may also petition the Administrator under §75.66 to use fewer sampling points. Such a petition shall include the proposed alternative sampling procedure and information demonstrating that there is no concentration stratification at the sampling location.

2.1.2.2 For stationary gas turbines, select sampling points and measure the NO_X and O_2 concentrations at each load point for each fuel or consistent combination of fuels (and, optionally, each combination of fuels) according to appendix A, Method 20 of part 60 of this chapter. For diesel or dual fuel reciprocating engines, measure the NO_X and O_2 concentrations according to Method 20, but modify Method 20 by selecting a sampling site to be as close as practical to the exhaust of the engine.

2.1.2.3 Allow the unit to stabilize for a minimum of 15 minutes (or longer if needed for the NO_X and O_2 readings to stabilize) prior to commencing NOx, O_2, and heat input measurements. Determine the average measurement system response time according to section 5.5 of Method 20 in appendix A, part 60 of this chapter. When inserting the probe into the flue gas for the first sampling point in each traverse, sample for at least one minute plus twice the average measurement system response time (or longer, if necessary to obtain a stable reading). For all other sampling points in each traverse, sample for at least one minute plus the average measurement response time (or longer, if necessary to obtain a stable reading). Perform three test runs at each load condition and obtain an arithmetic average of the runs for each load condition. During each test run on a boiler, record the boiler excess oxygen level at 5 minute intervals.

2.1.3 HEAT INPUT

Measure the total heat input (mmBtu) and heat input rate during testing (mmBtu/hr) as follows:

2.1.3.1 When the unit is combusting fuel, measure and record the flow of fuel consumed. Measure the flow of fuel with an

in-line flowmeter(s) and automatically record the data. If a portion of the flow is diverted from the unit without being burned, and that diversion occurs downstream of the fuel flowmeter, an in-line flowmeter is required to account for the unburned fuel. Install and calibrate in-line flow meters using the procedures and specifications contained in sections 2.1.2, 2.1.3, 2.1.4, and 2.1.5 of appendix D of this part. Correct any gaseous fuel flow rate measured at actual temperature and pressure to standard conditions of 68°F and 29.92 inches of mercury.

2.1.3.2 For liquid fuels, analyze fuel samples taken according to the requirements of section 2.2 of appendix D of this part to determine the heat content of the fuel. Determine heat content of liquid or gaseous fuel in accordance with the procedures in appendix F of this part. Calculate the heat input rate during testing (mmBtu/hr) associated with each load condition in accordance with Equations F–19 or F–20 in appendix F of this part and total heat input using Equation E–1 of this appendix. Record the heat input rate at each heat input/load point.

2.1.4 Emergency Fuel

The designated representative of a unit that is restricted by its Federal, State or local permit to combusting a particular fuel only during emergencies where the primary fuel is not available may petition the Administrator pursuant to the procedures in §75.66 for an exemption from the requirements of this appendix for testing the NO_X emission rate during combustion of the emergency fuel. The designated representative shall include in the petition a procedure for determining the NO_X emission rate for the unit when the emergency fuel is combusted, and a demonstration that the permit restricts use of the fuel to emergencies only. The designated representative shall also provide notice under §75.61(a) for each period when the emergency fuel is combusted.

2.1.5 Tabulation of Results

Tabulate the results of each baseline correlation test for each fuel or, as applicable, combination of fuels, listing: time of test, duration, operating loads, heat input rate (mmBtu/hr), F-factors, excess oxygen levels, and NO_X concentrations (ppm) on a dry basis (at actual excess oxygen level). Convert the NO_X concentrations (ppm) to NO_X emission rates (to the nearest 0.01 lb/mm/Btu) according to Equation F–5 of appendix F of this part or 19–3 in Method 19 of appendix A of part 60 of this chapter, as appropriate. Calculate the NO_X emission rate in lb/mmBtu for each sampling point and determine the arithmetic average NO_X emission rate of each test run. Calculate the arithmetic average of the boiler excess oxygen readings for each test run. Record the arithmetic average of the three test runs as the NO_X emission rate and the boiler excess oxygen level for the heat input/load condition.

2.1.6 Plotting of Results

Plot the tabulated results as an x–y graph for each fuel and (as applicable) combination of fuels combusted according to the following procedures.

2.1.6.1 Plot the heat input rate (mmBtu/hr) as the independent (or x) variable and the NO_X emission rates (lb/mmBtu) as the dependent (or y) variable for each load point. Construct the graph by drawing straight line segments between each load point. Draw a horizontal line to the y-axis from the minimum heat input (load) point.

2.1.6.2 Units that co-fire gas and oil may be tested while firing gas only and oil only instead of testing with each combination of fuels. In this case, construct a graph for each fuel.

2.2 Periodic NO_x Emission Rate Testing

Retest the NO_x emission rate of the gas-fired peaking unit or the oil-fired peaking unit prior to the earlier of 3,000 unit operating hours or the 5-year anniversary and renewal of its operating permit under part 72 of this chapter.

2.3 Other Quality Assurance/Quality Control-Related NOx Emission Rate Testing

When the operating levels of certain parameters exceed the limits specified below, or where the Administrator issues a notice requesting retesting because the NO_X emission rate data availability for when the unit operates within all quality assurance/quality control parameters in this section since the last test is less than 90.0 percent, as calculated by the Administrator, complete retesting of the NO_X emission rate by the earlier of: (1) 10 unit operating days (as defined in section 2.1 of appendix B of this part) or (2) 180 calendar days after exceeding the limits or after the date of issuance of a notice from the Administrator to re-verify the unit's NO_X emission rate. Submit test results in accordance with §75.60(a) within 45 days of completing the retesting.

2.3.1 For a stationary gas turbine, obtain a list of at least four operating parameters indicative of the turbine's NO_X formation characteristics, and the recommended ranges for these parameters at each tested load-heat input point, from the gas turbine manufacturer. If the gas turbine uses water or steam injection for NO_X control, the water/fuel or steam/fuel ratio shall be one of these parameters. During the NOx-heat input correlation tests, record the average value of each parameter for each load-heat input to ensure that the parameters are within the manufacturer's recommended range. Redetermine the NO_X emission rate-heat input correlation for

each fuel and (optional) combination of fuels after continuously exceeding the manufacturer's recommended range of any of these parameters for one or more successive operating periods totaling more than 16 unit operating hours.

2.3.2 For a diesel or dual-fuel reciprocating engine, obtain a list of at least four operating parameters indicative of the engine's NO_X formation characteristics, and the recommended ranges for these parameters at each tested load-heat input point, from the engine manufacturer. Any operating parameter critical for NO_X control shall be included. During the NO_X heat-input correlation tests, record the average value of each parameter for each load-heat input to ensure that the parameters are within the manufacturer's recommended range. Redetermine the NO_X emission rate-heat input correlation for each fuel and (optional) combination or fuels after continuously exceeding the manufacturer's recommended range of any of these parameters for one or more successive operating periods totaling more than 16 unit operating hours.

2.3.3 For boilers using the procedures in this appendix, the NO_X emission rate heat input correlation for each fuel and (optional) combination of fuels shall be redetermined if the excess oxygen level at any heat input rate (or unit operating load) continuously exceeds by more than 2 percentage points O_2 from the boiler excess oxygen level recorded at the same operating heat input rate during the previous NO_X emission rate test for one or more successive operating periods totaling more than 16 unit operating hours.

2.4 Procedures for Determining Hourly NO_X Emission Rate

2.4.1 Record the time (hr. and min.), load (MWge or steam load in 1000 lb/hr), fuel flow rate and heat input rate (using the procedures in section 2.1.3 of this appendix) for each hour during which the unit combusts fuel. Calculate the total hourly heat input using Equation E–1 of this appendix. Record the heat input rate for each fuel to the nearest 0.1 mmBtu/hr. During partial unit operating hours or during hours where more than one fuel is combusted, heat input must be represented as an hourly rate in mmBtu/hr, as if the fuel were combusted for the entire hour at that rate (and not as the actual, total heat input during that partial hour or hour) in order to ensure proper correlation with the NO_X emission rate graph.

2.4.2 Use the graph of the baseline correlation results (appropriate for the fuel or fuel combination) to determine the NO_X emissions rate (lb/mmBtu) corresponding to the heat input rate (mmBtu/hr). Input this correlation into the data acquisition and handling system for the unit. Linearly interpolate to 0.1 mmBtu/hr heat input rate and 0.01 lb/mmBtu NO_X.

2.4.3 To determine the NO_X emission rate for a unit co-firing fuels that has not been tested for that combination of fuels, interpolate between the NO_X emission rate for each fuel as follows. Determine the heat input rate for the hour (in mmBtu/hr) for each fuel and select the corresponding NO_X emission rate for each fuel on the appropriate graph. (When a fuel is combusted for a partial hour, determine the fuel usage time for each fuel and determine the heat input rate from each fuel as if that fuel were combusted at that rate for the entire hour in order to select the corresponding NO_X emission rate.) Calculate the total heat input to the unit in mmBtu for the hour from all fuel combusted using Equation E–1. Calculate a Btu-weighted average of the emission rates for all fuels using Equation E–2 of this appendix.

2.4.4 For each hour, record the critical quality assurance parameters, as identified in the monitoring plan, and as required by section 2.3 of this appendix.

2.5 Missing Data Procedures

Provide substitute data for each unit electing to use this alternative procedure whenever a valid quality-assured hour of NO_X emission rate data has not been obtained according to the procedures and specifications of this appendix.

2.5.1 Use the procedures of this section whenever any of the quality assurance/quality control parameters exceeds the limits in section 2.3 of this appendix or whenever any of the quality assurance/quality control parameters are not available.

2.5.2 Substitute missing NO_X emission rate data using the highest NO_X emission rate tabulated during the most recent set of baseline correlation tests for the same fuel or, if applicable, combination of fuels.

2.5.3 Maintain a record indicating which data are substitute data and the reasons for the failure to provide a valid quality-assured hour of NO_X emission rate data according to the procedures and specifications of this appendix.

2.5.4 Substitute missing data from a fuel flowmeter using the procedures in section 2.4.3 of appendix D of this part.

2.5.5 Substitute missing data for gross calorific value of fuel using the procedures in section 2.4.2 of appendix D of this part.

3. CALCULATIONS

3.1 Heat Input

Calculate the total heat input by summing the product of heat input rate and fuel usage time of each fuel, as in the following equation:

$$H_T = HI_{fuel}\mathbf{1}\ t_1 + HI_{fuel2}\ t_2 + HI_{fuel}\mathbf{3}\ t_3 + \ldots + HI_{lastfuel}\ t_{last} \qquad \text{(Eq. E–1)}$$

Where:

H_T = Total heat input of fuel flow or a combination of fuel flows to a unit, mmBtu;

$HI_{fuel1,2,3,...last}$ = Heat input rate from each fuel during fuel usage time, in mmBtu/hr, as determined using equation F–19 or F–20 in section 5.5 of appendix F of this part, mmBtu/hr;

$t_{1,2,3,...last}$ = Fuel usage time for each fuel, rounded up to the nearest .25 hours.

NOTE: For hours where a fuel is combusted for only part of the hour, use the fuel flow rate or mass flow rate during the fuel usage time, instead of the total fuel flow during the hour, when calculating heat input rate using Equation F–19 or F–20.

3.2 F-factors

Determine the F-factors for each fuel or combination of fuels to be combusted according to section 3.3 of appendix F of this part.

3.3 NO_X Emission Rate

3.3.1 Conversion from Concentration to Emission Rate [Amended]

Convert the NO_X concentrations (ppm) and O_2 concentrations to NO_X emission rates (to the nearest 0.01 lb/mmBtu) according to the appropriate one of the following equations: F–5 in appendix F of this part for dry basis concentration measurements, or 19–3 in Method 19 of appendix A of part 60 of this chapter for wet basis concentration measurements.

3.3.2 Quarterly Average NO_X Emission Rate

Report the quarterly average emission rate (lb/mmBtu) as required in subpart G of this part. Calculate the quarterly average NO_X emission rate according to Equation F–9 in Appendix F of this part.

3.3.3 Annual Average NO_X Emission Rate

Report the average emission rate (lb/mmBtu) for the calendar year as required in subpart G of this part. Calculate the average NO_X emission rate according to equation F–10 in appendix F of this part.

3.3.4 Average NO_X Emission Rate During Co-firing of Fuels [Amended] (Eq. E–2)

Where:

E_h=NO_X emission rate for the unit for the hour, lb/mmBtu;

$$E_h = \frac{\sum_{f=1}^{\text{all fuels}} \left(E_f \times HI_f \; t_f\right)}{H_T}$$

E_f=NO_X emission rate for the unit for a given fuel at heat input rate HI_f, lb/mmBtu;

HI_f=Heat input rate for a given fuel during the fuel usage time, as determined using equation F–19 or F–20 in section 5.5 of appendix F of this part, mmBtu/hr;

H_T=Total heat input for all fuels for the hour from Equation E–1;

t_f=Fuel usage time for each fuel, rounded to the nearest .25 hour.

NOTE: For hours where a fuel is combusted for only part of the hour, use the fuel flow rate or mass flow rate during the fuel usage time, instead of the total fuel flow or mass flow during the hour, when calculating heat input rate using Equation F–19 or F–20.

4. Quality Assurance/Quality Control Plan

Include a section on the NO_X emission rate determination as part of the monitoring quality assurance/quality control plan required under §75.21 and appendix B of this part for each gas-fired peaking unit and each oil-fired peaking unit. In this section present information including, but not limited to, the following: (1) a copy of all data and results from the initial NO_X emission rate testing, including the values of quality assurance parameters specified in Section 2.3 of this appendix; (2) a copy of all data and results from the most recent NO_X emission rate load correlation testing; (3) a copy of the unit manufacturer's recommended range of quality assurance- and quality control-related operating parameters.

4.1 Submit a copy of the unit manufacturer's recommended range of operating parameter values, and the range of operating parameter values recorded during the previous NO_X emission rate test that determined the unit's NO_X emission rate, along with the unit's revised monitoring plan submitted with the certification application.

4.2 Keep records of these operating parameters for each hour of operation in order to demonstrate that a unit is remaining within the manufacturer's recommended operating range.

[58 FR 3701, Jan. 11, 1993, as amended at 60 FR 26551-26553, May 17, 1995]

Appendix F to Part 75—Conversion Procedures

1. Applicability

Use the procedures in this appendix to convert measured data from a monitor or continuous emission monitoring system into the appropriate units of the standard.

2. Procedures for SO_2 emissions

Use the following procedures to compute hourly, quarterly, and annual SO_2 mass emissions (in lb/hr). Use the procedures in Method 19 in Appendix A to part 60 of this chapter to compute hourly SO_2 emission

rates (in lb/mmBtu) for qualifying Phase I technologies.

2.1 When measurements of SO_2 concentration and flow rate are on a wet basis, use the following equation to compute hourly SO_2 mass emissions (in lb/hr).

$$E_h = K\ C_h\ Q_h$$

(Eq. F–1)

where,

E_h=Hourly SO_2 mass emissions, lb/hr.

$K=1.660\times10^{-7}$ for SO_2, (lb/scf)/ppm.

C_h=Hourly average SO_2 concentration, stack moisture basis, ppm.

Q_h=Hourly average volumetric flow rate, stack moisture basis, scfh.

2.2 When measurements by the SO_2 pollutant concentration monitor are on a dry basis and the flow rate monitor measurements are on a wet basis, use the following equation to compute hourly SO_2 mass emissions (in lb/hr).

$$E_h = K\ C_{hp}\ Q_{hs}\ \frac{(100-\%H_2O)}{100}$$

(Eq. F–2)

where,

E_h=Hourly SO_2 mass emissions, lb/hr.

$K=1.660\times10^{-7}$ for SO_2 , (lb/scf)/ppm.

C_{hp}=Hourly average SO_2 concentration, ppm (dry).

Q_{hs}=Hourly average volumetric flow rate, scfh as measured (wet).

$\%H_2O$=Hourly average stack moisture content, percent by volume.

2.3 Use the following equations to calculate total SO_2 mass emissions for each calendar quarter (Eq. F–3) and for each calendar year (Eq. F–4) in tons.

$$E_q = \frac{\sum_{h=1}^{n} E_h}{2000}$$

(Eq. F–3)

where,

E_q=Quarterly total SO_2 mass emissions, tons.

E_h=Hourly SO_2 mass emissions, lb/hr.

n=Number of hourly SO_2 emissions values during calendar quarter.

2000=Conversion of 2000 lb per ton.

$$E_a = \sum_{q=1}^{4} E_q$$

(Eq. F–4)

where,

E_a=Annual total SO_2 mass emissions, tons.

E_q=Quarterly SO_2 mass emissions, tons.

q=Quarters for which E_q are available during calendar year.

2.4 Round all SO_2 mass emissions to the number of decimal places identified in §75.50(c) or §75.54(c) of this part (in lb/hr).

3. PROCEDURES FOR NO_x EMISSION RATE

Use the following procedures to convert continuous emission monitoring system measurements of NO_x concentration (ppm) and diluent concentration (percentage) into NO_x emission rates (in lb/mmBtu). Perform measurements of NO_x and diluent (O_2 or CO_2) concentrations on the same moisture (wet or dry) basis.

3.1 When the NO_x continuous emission monitoring system uses O_2 as the diluent, and measurements are performed on a dry basis, use the following conversion procedure:

$$E = K\ C_h\ F\ \frac{20.9}{20.9 - \%O_2}$$

(Eq. F–5)

where,

K, E, C_h, F, and $\%O_2$ are defined in section 3.3 of this appendix. When measurements are performed on a wet basis, use the equations in Method 19 in Appendix A of part 60 of this chapter.

3.2 When the NO_X continuous emission monitoring system uses CO_2 as the diluent, use the following conversion procedure:

$$E = K\ C_h\ F_c\ \frac{100}{\%CO_2}$$

(Eq. F–6)

where:

K, E, Ch, Fc, and $\%CO_2$ are defined in section 3.3 of this appendix.

When CO_2 and NO_X measurements are performed on a different moisture basis, use the equations in Method 19 in Appendix A of part 60 of this chapter.

3.3 Use the definitions listed below to derive values for the parameters in Equations F–5 and F–6 of this appendix.

3.3.1 K=1.194x10−7 (lb/dscf)/ppm NO_x.

3.3.2 E=pollutant emissions, lb/mmBtu.

3.3.3 C_h=hourly average pollutant concentration, ppm.

3.3.4 $\%O_2$, $\%CO_2$=oxygen or carbon dioxide volume (expressed as percent O_2 or CO_2).

3.3.5 F, F_c=a factor representing a ratio of the volume of dry flue gases generated to the caloric value of the fuel combusted (F), and a factor representing a ratio of the volume of CO_2 generated to the calorific value of the fuel combusted (F_c), respectively. Table 1 lists the values of F and F_c for different fuels. A minimum concentration of 5.0 percent CO_2 and a maximum concentration of 14.0 percent O_2 may be substituted for measured diluent gas concentration values during unit start-up.

TABLE 1.—F- AND F_c-FACTORS [1]

Fuel	F-factor (dscf/mmBtu)	F_c-factor (scf CO_2/mmBtu)
Coal (as defined by ASTM D388–92):		
Anthracite	10,100	1,970
Bituminous and subbituminous	9,780	1,800
Lignite	9,860	1,910
Oil	9,190	1,420
Gas:		
Natural gas	8,710	1,040
Propane	8,710	1,190
Butane	8,710	1,250
Wood:		
Bark	9,600	1,920
Wood residue	9,240	1,830

[1] Determined at standard conditions: 20 °C (68 °F) and 29.92 inches of mercury.

3.3.6 Equations F–7a and F–7b may be used in lieu of the F or F_c factors specified in Section 3.3.5 of this appendix to calculate an F factor (dscf/mmBtu) on a dry basis or an F_c factor (scf CO_2/mmBtu) on either a dry or wet basis.

(Calculate all F- and F_c factors at standard conditions of 20 °C (68 °F) and 29.92 inches of mercury.)

$$F = \frac{3.64(\%H) + 1.53(\%C) + 0.57(\%S) + 0.14(\%N) - 0.46(\%O)}{GCV} \times 10^6$$

(Eq. F–7a)

$$F_c = \frac{321 \times 10^3 (\%C)}{GCV}$$

(Eq. F–7b)

3.3.6.1 H, C, S, N, and O are content by weight of hydrogen, carbon, sulfur, nitrogen, and oxygen (expressed as percent), respectively, as determined on the same basis as the gross calorific value (GCV) by ultimate analysis of the fuel combusted using ASTM D3176–89, ''Standard Practice for Ultimate Analysis of Coal and Coke'' (solid fuels), ASTM D5291–92, ''Standard Test Methods for Instrumental Determination of Carbon, Hydrogen, and Nitrogen in Petroleum Products and Lubricants'' (liquid fuels) or computed from results using ASTM D1945–91, ''Standard Test Method for Analysis of Natural Gas by Gas Chromatography'' or ASTM D1946–90, ''Standard Practice for Analysis of Reformed Gas by Gas Chromatography'' (gaseous fuels) as applicable. (These methods are incorporated by reference under §75.6 of this part.)

3.3.6.2 GCV is the gross calorific value (Btu/lb) of the fuel combusted determined by ASTM D2015–91, ''Standard Test Method for Gross Calorific Value of Coal and Coke by the Adiabatic Bomb Calorimeter'', ASTM D1989–92 ''Standard Test Method for Gross Calorific Value of Coal and Coke by Microprocessor Controlled Isoperibol Calorimeters,'' or ASTM D3286–91a ''Standard Test Method for Gross Calorific Value of Coal and Coke by the Isoperibol Bomb Calorimeter'' for solid and liquid fuels, and ASTM D240–87 (Reapproved 1991) ''Standard Test Method for Heat of Combustion of Liquid Hydrocarbon Fuels by Bomb Calorimeter'', or ASTM D2382–88 ''Standard Test Method for Heat of Combustion of Hydrocarbon Fuels by Bomb Calorimeter (High-Precision Method)'' for oil; and ASTM D3588–91 ''Standard Practice for Calculating Heat Value, Compressibility Factor, and Relative Density (Specific Gravity) of Gaseous Fuels,'' ASTM D4891–89 ''Standard Test Method for Heating Value of Gases in Natural Gas Range by Stoichiometric Combustion,'' GPA Standard 2172 86 ''Calculation of Gross Heating Value, Relative Density and Compressibility Factor for Natural Gas Mixtures from Compositional Analysis,'' GPA Standard 2261–90 ''Analysis for Natural Gas and Similar Gaseous Mixtures by Gas Chromatography,'' or ASTM D1826–88, ''Standard Test Method for Calorific (Heating) Value of Gases in Natural Gas Range by Continuous Recording Calorimeter'' for gaseous fuels, as applicable. (These methods are incorporated by reference under §75.6).

3.3.6.3 For affected units that combust a combination of fossil (coal, oil and gas) and nonfossil (e.g., bark, wood, residue, or refuse)

fuels, the F or F_c value is subject to the Administrator's approval.

3.3.6.4 For affected units that combust combinations of fossil fuels or fossil fuels and wood residue, prorate the F or F_c factors determined by Section 3.3.5 of this appendix in accordance with the applicable formula as follows:

$$F = \sum_{i=1}^{n} X_i F_i \qquad F_c = \sum_{i=1}^{n} X_i (F_c)_i$$

(Eq. F–8)

where,

X_i = Fraction of total heat input derived from each type of fuel (e.g., natural gas, bituminous coal, wood).

F_i or $(F_c)_i$ = Applicable F or F_c factor for each fuel type determined in accordance with Section 3.3.5 of this appendix.

n = Number of fuels being combusted in combination.

3.4 Use the following equations to calculate the average NO_X emission rate for each calendar quarter (Eq. F–9) and the average emission rate for the calendar year (Eq. F–10) in lb/mmBtu.

$$E_q = \sum_{i=1}^{n} \frac{E_i}{n} \qquad \text{(Eq. F–9)}$$

where:

Eq=Quarterly average NO_X emission rate, lb/mmBtu.

Ei=Hourly average Nox emission rate, lb/mmBtu.

n=Number of hourly rates during calendar quarter.

$$E_a = \sum_{i=1}^{m} \frac{E_i}{m} \qquad \text{(Eq. F – 10)}$$

where:

E_a=Average NO_X emission rate for the calendar year, lb/mmBtu.

E_i=Hourly average NO_X emission rate, lb/mmBtu.

m=Number of hours for which E_i is available in the calendar year.

3.5 Round all NO_x emission rates to the nearest 0.01 lb/mmBtu.

4. PROCEDURES FOR CO_2 MASS EMISSIONS

Use the following procedures to convert continuous emission monitoring system measurements of CO_2 concentration (percentage) and volumetric flow rate (scfh) into CO_2 mass emissions (in tons/day) when the owner or operator uses a CO_2 continuous emission monitoring system (consisting of a CO_2 or O_2 pollutant monitor) and a flow monitoring system to monitor CO_2 emissions from an affected unit.

4.1 When CO_2 concentration is measured on a wet basis, use the following equation to calculate hourly CO_2 mass emissions rates (in tons/hr).

$E_h = K\ C_h\ Q_h$

(Eq. F–11)

where,

E_h = Hourly CO_2 mass emissions, tons/hr.

$K = 5.7 \times 10^{-7}$ for CO_2, (tons/scf) /%CO_2.

C_h=Hourly average CO_2 concentration, stack moisture basis, %CO_2. A minimum concentration of 5.0 percent CO_2 may be substituted for the measured concentration during unit start-up.

Q_h = Hourly average volumetric flow rate, stack moisture basis, scfh.

4.2 When CO_2 concentration is measured on a dry basis, use Equation F–2 to calculate the hourly CO_2 mass emissions (in tons/hr) with a K-value of 5.7 x 10^{-7} (tons/scf)%CO_2, where E_h = hourly CO_2 mass emissions, tons/hr and C_{hp} = hourly average CO_2 concentration in flue; dry basis, %CO_2.

4.3 Use the following equations to calculate total CO_2 mass emissions for each calendar quarter (Equation F–12 and for each calendar year (Equation F–13).

$$E_{CO_{2q}} = \sum_{i=1}^{H_R} E_{h_i}$$

(Eq. F–12)

where,

E_{CO2q} = Quarterly total CO_2 mass emissions, tons.

E_{hi} = Hourly CO_2 mass emissions (tons/hr).

H_R = Number of hourly CO_2 mass emissions available during calendar quarter.

$$E_{CO_{2a}} = \sum_{q=1}^{4} E_{CO_{2q}}$$

(Eq. F–13)

where,

E_{CO2a}=Annual total CO_2 mass emissions, tons.

E_{CO2q}=Quarterly total CO_2 mass emissions, tons.

q=Quarters for which E_{CO2q} are available during calendar year.

4.4 For an affected unit, when the owner or operator is continuously monitoring O_2 concentration (in percent by volume) of flue gases using an O_2 monitor, use the equations

and procedures in section 4.4.1 through 4.4.3 of this appendix to determine hourly CO_2 mass emissions (in tons).

4.4.1 Use appropriate F and F_c factors from section 3.3.5 of this appendix in the following equation to determine hourly average CO_2 concentration of flue gases (in percent by volume).

$$CO_{2d} = 100 \frac{F_c}{F} \frac{20.9 - O_{2d}}{20.9}$$

(Eq. F–14a)

Where:

CO_{2d}=Hourly average CO_2 concentration, percent by volume, dry basis.

F, F_c=F-factor or carbon-based Fc-factor from section 3.3.5 of this appendix.

20.9=Percentage of O_2 in ambient air.

O_{2d}=Hourly average O_2 concentration, percent by volume, dry basis. A maximum concentration of 14.0 percent O2 may be substituted for the measured concentration during unit start-up.

or

$$CO_{2w} \frac{100}{20.9} \frac{F_c}{F} \left[20.9 \left(\frac{100 - \%H_2O}{100} \right) - O_{2w} \right]$$

(Eq. F–14b)

Where:

CO_{2w}=Hourly average CO_2 concentration, percent by volume, wet basis.

O_{2w}=Hourly average O_2 concentration, percent by volume, wet basis. A maximum concentration of 14.0 percent O_2 may be substituted for the measured concentration during unit start-up.

F, F_c=F-factor or carbon-based F_c-factor from section 3.3.5 of this appendix.

20.9=Percentage of O_2 in ambient air.

%H_2 O=Moisture content of gas in the stack, percent.

4.4.2 Determine CO_2 mass emissions (in tons) from hourly average CO_2 concentration (percent by volume) using Equation F–11 and the procedure in section 4.1, where O_2 measurements are on a wet basis, or using the procedures in section 4.2 of this appendix, where O_2 measurements are on a dry basis.

5. Procedures for Heat Input

Use the following procedures to compute heat input to an affected unit (in mmBtu/hr or mmBtu/day).

5.1 Calculate and record heat input to an affected unit on an hourly basis, except as provided below. The owner or operator may choose to use the provisions specified in §75.16(e) or in section 2.1.2 of appendix D of this part in conjunction with the procedures provided below to apportion heat input among each unit using the common stack or common pipe header.

5.2 For an affected unit that has a flow monitor (or approved alternate monitoring system under subpart E of this part for measuring volumetric flow rate) and a diluent gas (O_2 or CO_2) monitor, use the recorded data from these monitors and one of the following equations to calculate hourly heat input (in mmBtu/hr).

5.2.1 When measurements of CO_2 concentration are on a wet basis, use the following equation:

$$HI = Q_w \frac{1}{F_c} \frac{\%CO_{2w}}{100}$$

(Eq. F–15)

where,

HI=Hourly heat input, mmBtu/hr.

Q_w=Hourly average volumetric flow rate, wet basis, scfh.

F_c=Carbon-based F-factor, listed in Section 3.3.5 of this appendix for each fuel, scf/mmBtu.

%CO_{2w}=Hourly concentration of CO_2, percent CO_2 wet basis. A minimum concentration of 5.0 percent CO_2 may be substituted for the measured concentration during unit startup.

5.2.2 When measurements of CO_2 concentration are on a dry basis, use the following equation:

$$HI = Q_h \left[\frac{(100 - \%H_2O)}{100F_c}\right]\left(\frac{\%CO_{2d}}{100}\right)$$

(Eq. F–16)

where

HI=Hourly heat input, mmBtu/hr.

Q_h=Hourly average volumetric flow rate, wet basis, scfh.

F_c=Carbon-based F-Factor, listed above in Section 3.3.5 of this appendix for each fuel, scf/mmBtu.

$\%CO_{2d}$=Hourly concentration of CO_2, percent CO_2 dry basis. A minimum concentration of 5.0 percent CO_2 may be substituted for the measured concentration during unit startup.

$\%H_2O$=Moisture content of gas in the stack, percent.

5.2.3 When measurements of O_2 concentration are on a wet basis, use the following equation:

$$HI = Q_w \frac{1}{F} \frac{[(20.9/100)(100 - \%H_2O) - \%O_{2w}]}{20.9}$$

(Eq. F–17)

where

HI=Hourly heat input, mmBtu/hr.

Q_w=Hourly average volumetric flow rate, wet basis, scfh.

F=Dry basis F-Factor, listed above in Section 3.3.5 of this appendix for each fuel, dscf/mmBtu.

$\%O_{2w}$=Hourly concentration of O_2, percent O_2 wet basis. A maximum concentration of 14.0 percent O_2 may be substituted for the measured concentration during unit startup.

$\%H_2O$=Hourly average stack moisture content, percent by volume.

5.2.4 When measurements of O_2 concentration are on a dry basis, use the following equation:

$$HI = Q_w \left[\frac{(100 - \%H_2O)}{100F}\right]\left[\frac{(20.9 - \%O_{2d})}{20.9}\right]$$

(Eq. F–18)

where,

HI=Hourly heat input, mmBtu/hr.

Q_w=Hourly average volumetric flow, wet basis, scfh.

F=Dry basis F-factor, listed above in Section 3.3.5 of this appendix for each fuel, dscf/mmBtu.

$\%H_2O$=Moisture content of the stack gas, percent.

$\%O_{2d}$=Hourly concentration of O_2, percent O_2 dry basis. A maximum concentration of 14.0 percent O_2 may be substituted for the measured concentration during unit startup.

5.3—5.4 [Reserved]

5.5 For a gas-fired or oil-fired unit that does not have a flow monitor and is using the procedures specified in appendix D to this part to monitor SO_2 emissions or for any affected unit using a common stack for which the owner or operator chooses to determine heat input by fuel sampling and analysis, use the following procedures to calculate hourly heat input in mmBtu/hr.

5.5.1 When the unit is combusting oil, use the following equation to calculate hourly heat input.

(Eq. F–19)

$$HI_o = M_o \frac{GCV_o}{10^6} \qquad \text{(Eq. F–19)}$$

Where:

HIo=Hourly heat input from oil, mmBtu/hr.

Mo=Mass of oil consumed per hour, as determined using procedures in appendix D of this part, in lb, tons, or kg.

GCVo=Gross calorific value of oil, as measured daily by ASTM D240–87 (Reapproved 1991), ASTM D2015–91, or ASTM D2382–88, Btu/unit mass (incorporated by reference under §75.6 of this part).

10^6=Conversion of Btu to mmBtu.

When performing oil sampling and analysis solely for the purpose of the missing data procedures in §75.36, oil samples for measuring GCV may be taken weekly and the procedures specified in appendix D of this part for determining the mass of oil consumed per hour are optional.

5.5.2 When the unit is combusting gaseous fuels, use the following equation to calculate heat input from gaseous fuels for each hour.

(Eq. F–20)

$$HI_g = \frac{Q_g \times GCV_g}{10{,}000} \qquad \text{(Eq. F–20)}$$

Where:

HI_g=Hourly heat input from gaseous fuel, mmBtu/hour.

Q_g=Metered flow or amount of gaseous fuel combusted during the hour, hundred cubic feet.

GCV_g=Gross calorific value of gaseous fuel, as determined by sampling at least every month the gaseous fuel is combusted, or as verified by the contractual supplier at least once every month the gaseous fuel is combusted using ASTM D1826–88, ASTM D3588–91, ASTM D4891–89, GPA Standard 2172–86 ''Calculation of Gross Heating Value, Relative Density and Compressibility Factor for Natural Gas Mixtures from Compositional Analysis,'' or GPA Standard 2261–90 ''Analysis for Natural Gas and Similar Gaseous Mixtures by Gas Chromatography,'' Btu/cubic foot (incorporated by reference under §75.6 of this part).

10,000=Conversion factor, (Btu-100 scf)/(mmBtu-scf).

5.5.3 When the unit is combusting coal, use the procedures, methods, and equations in sections 5.5.3.1–5.5.3.3 of this appendix to determine the heat input from coal for each 24-hour period. (All ASTM methods are incorporated by reference under §75.6 of this part.)

5.5.3.1 Perform coal sampling daily according to section 5.3.2.2 in Method 19 in appendix A to part 60 of this chapter and use ASTM Method D2234–89, ''Standard Test Methods for Collection of a Gross Sample of Coal,'' (incorporated by reference under §75.6) Type I, Conditions A, B, or C and systematic spacing for sampling. (When performing coal sampling solely for the purposes of the missing data procedures in §75.36, use of ASTM D2234–89 is optional, and coal samples may be taken weekly.)

5.5.3.2 Use ASTM D2013–86, ''Standard Method of Preparing Coal Samples for Analysis,'' for preparation of a daily coal sample and analyze each daily coal sample for gross calorific value using ASTM D2015–91, ''Standard Test Method for Gross Calorific Value of Coal and Coke by the Adiabatic Bomb Calorimeter'', ASTM 1989–92 ''Standard Test Method for Gross Calorific Value of Coal and Coke by Microprocessor Controlled Isoperibol Calorimeters,'' or ASTM 3286–91a ''Standard Test Method for Gross Calorific Value of Coal and Coke by the Isoperibol Bomb Calorimeter.'' (All ASTM methods are incorporated by reference under §75.6 of this part.)

On-line coal analysis may also be used if the on-line analytical instrument has been demonstrated to be equivalent to the applicable ASTM methods under §§75.23 and 75.66.

5.5.3.3 Calculate the heat input from coal using the following equation:

$$HI_c = M_c \frac{GCV_c}{500} \qquad \text{(Eq. F–21)}$$

(Eq. F–21)

Where:

HIc=Daily heat input from coal, mmBtu/day.

Mc=Mass of coal consumed per day, as measured and recorded in company records, tons.

GCV_c=Gross calorific value of coal sample, as measured by ASTM D3176–89, D1989–92, D3286–91a, or D2015–91, Btu/lb.

500=Conversion of Btu/lb to mmBtu/ton.

5.5.4 For units obtaining heat input values daily instead of hourly, apportion the daily heat input using the fraction of the daily steam load or daily unit operating load used each hour in order to obtain HI_i for use in the above equations. Alternatively, use the hourly mass of coal consumed in equation F–21.

5.5.5 If a daily fuel sampling value for gross calorific value is not available, substitute the maximum gross calorific value measured from the previous 30 daily samples. If a monthly fuel sampling value for gross calorific value is not available, substitute the maximum gross calorific value measured from the previous 3 monthly samples.

5.5.6 If a fuel flow value is not available, use the fuel flowmeter missing data procedures in section 2.4 of appendix D of this part. If a daily coal consumption value is not available, substitute the maximum fuel feed rate during the previous thirty days when the unit burned coal.

5.5.7 Results for samples must be available no later than thirty calendar days after the sample is composited or taken. However, during an audit, the Administrator may require that the results be available in five business days, or sooner if practicable.

6. Procedure for Converting Volumetric Flow to STP

Use the following equation to convert volumetric flow at actual temperature and pressure to standard temperature and pressure.

$$F_{STP}=F_{Actual}(T_{Std}/T_{Stack})(P_{Stack}/P_{Std})$$

Where:

F_{STP}=Flue gas volumetric flow rate at standard temperature and pressure, scfh.

F_{Actual}=Flue gas volumetric flow rate at actual temperature and pressure, acfh.

T_{Std}=Standard temperature=528 °R.

T_{Stack}=Flue gas temperature at flow monitor location, °R, where °R=460+°F.

P_{Stack}=The absolute flue gas pressure=barometric pressure at the flow monitor location + flue gas static pressure, inches of mercury.

P_{Std}=Standard pressure=29.92 inches of mercury.

7. Procedures for SO_2 Mass Emissions at Units With SO_2 Continuous Emission Monitoring Systems During the Combustion of Pipeline Natural Gas

The owner or operator shall use the following equation to calculate hourly SO_2 mass

emissions as allowed for units with SO_2 continuous emission monitoring systems if, during the combustion of pipeline natural gas, SO_2 emissions are determined in accordance with §75.11(e)(1).

E_h=(0.0006) HI (Eq. F–23)

Where,

E_h=Hourly SO_2 mass emissions, lb/hr.

0.0006=Default SO_2 emission rate for pipeline natural gas, lb/mmBtu.

HI=Hourly heat input, as determined using the procedures of section 5.2 of this appendix.

[58 FR 3701, Jan. 11, 1993; Redesignated and amended at 60 FR 26553-26556, 26571, May 17, 1995; 61 FR 25585, May 22, 1996; 61 FR 59166, Nov. 20, 1996]

APPENDIX G TO PART 75—DETERMINATION OF CO_2 EMISSIONS

1. APPLICABILITY

The procedures in this appendix may be used to estimate CO_2 mass emissions discharged to the atmosphere (in tons/day) as the sum of CO_2 emissions from combustion and, if applicable, CO_2 emissions from sorbent used in a wet flue gas desulfurization control system, fluidized bed boiler, or other emission controls.

2. PROCEDURES FOR ESTIMATING CO_2 EMISSIONS FROM COMBUSTION

Use the following procedures to estimate daily CO_2 mass emissions from the combustion of fossil fuels. The optional procedure in section 2.3 of this appendix may also be used for an affected gas-fired unit. For an affected unit that combusts any nonfossil fuels (e.g., bark, wood, residue, or refuse), either use a CO_2 continuous emission monitoring system or apply to the Administrator for approval of a unit-specific method for determining CO_2 emissions.

2.1 Use the following equation to calculate daily CO_2 mass emissions (in tons/day) from the combustion of fossil fuels. Where fuel flow is measured in a common pipe header (i.e., a pipe carrying fuel for multiple units), the owner or operator may use the procedures in section 2.1.2 of appendix D of this part for combining or apportioning emissions, except that the term ''SO_2 mass emissions'' is replaced with the term ''CO_2 mass emissions.''

$$W_{CO_2} = \frac{\left(MW_C + MW_{O_2}\right) \times W_C}{2{,}000\, MW_C} \quad \text{(Eq. G–1)}$$

Where:

$Wco2=CO_2$ emitted from combustion, tons/day.

MW_c=Molecular weight of carbon (12.0).

MW_{o2}=Molecular weight of oxygen (32.0)

W_C=Carbon burned, lb/day, determined using fuel sampling and analysis and fuel feed rates. Collect at least one fuel sample during each week that the unit combusts coal or oil, one sample per each shipment for diesel fuel, and one fuel sample each month the unit combusts gaseous fuels. Collect coal samples from a location in the fuel handling system that provides a sample representative of the fuel bunkered or consumed during the week. Determine the carbon content of each fuel sampling using one of the following methods: ASTM D3178–89 for coal; ASTM D5291–92 ''Standard Test Methods for Instrumental Determination of Carbon, Hydrogen, and Nitrogen in Petroleum Products and Lubricants,'' ultimate analysis of oil, or computations based upon ASTM D3238–90 and either ASTM D2502–87 or ASTM D2503–82 (Reapproved 1987) for oil; and computations based on ASTM D1945–91 or ASTM D1946–90 for gas. Use daily fuel feed rates from company records for all fuels and the carbon content of the most recent fuel sample under this section to determine tons of carbon per day from combustion of each fuel. (All ASTM methods are incorporated by reference under §75.6). Where more than one fuel is combusted during a calendar day, calculate total tons of carbon for the day from all fuels.

2.2 For an affected coal-fired unit, the estimate of daily CO_2 mass emissions given by Equation G–1 may be adjusted to account for carbon retained in the ash using the procedures in either section 2.2.1 through 2.2.3 or section 2.2.4 of this appendix.

2.2.1 Determine the ash content of the weekly sample of coal using ASTM D3174–89 ''Standard Test Method for Ash in the Analysis Sample of Coal and Coke From Coal'' (incorporated by reference under §75.6 of this part).

2.2.2 Sample and analyze the carbon content of the fly-ash according to ASTM D3178–89, ''Standard Test Methods for Carbon and Hydrogen in the Analysis Sample of Coal and Coke'' (incorporated by reference under §75.6 of this part).

2.2.3 Discount the estimate of daily CO_2 mass emissions from the combustion of coal given by Equation G–1 by the percent carbon retained in the ash using the following equation:

$$W_{NCO2} = W_{CO2} - \left(\frac{MW_{CO2}}{MW_c}\right)\left(\frac{A\%}{100}\right)\left(\frac{C\%}{100}\right)W_{COAL}$$

where,

W_{NCO2} = Net CO_2 mass emissions discharged to the atmosphere, tons/day.

W_{CO2} = Daily CO_2 mass emissions calculated by Equation G–1, tons/day.

MW_{C02} = Molecular weight of carbon dioxide (44.0).

MW_c = Molecular weight of carbon (12.0).

A% = Ash content of the coal sample, percent by weight.

C% = Carbon content of ash, percent by weight.

W_{COAL} = Feed rate of coal from company records, tons/day.

2.2.4 The daily CO_2 mass emissions from combusting coal may be adjusted to account for carbon retained in the ash using the following equation:

$W_{NCO2} = .99\ W_{CO2}$

(Eq. G–3)

where,

W_{NCO2} = Net CO_2 mass emissions from the combustion of coal discharged to the atmosphere, tons/day.

.99 = Average fraction of coal converted into CO_2 upon combustion.

W_{CO2} = Daily CO_2 mass emissions from the combustion of coal calculated by Equation G–1, tons/day.

2.3 In lieu of using the procedures, methods, and equations in section 2.1 of this appendix, the owner or operator of an affected gas-fired unit as defined under §72.2 of this chapter may use the following equation and records of hourly heat input to estimate hourly CO_2 mass emissions (in tons).

$$W_{CO_2} = \left(\frac{F_C \times H \times U_f \times MW_{CO_2}}{2000}\right) \qquad \text{(Eq. G–4)}$$

(Eq.G–4)

Where:

$WCO_2=CO_2$ emitted from combustion, tons/hr.

Fc=Carbon-based F-factor, 1,040 scf/mmBtu for natural gas; 1,420 scf/mm/btu for crude, residual, or distillate oil.

H = Hourly heat input in mmBtu, as calculated using the procedures in section 5 of appendix F of this part.

Uf=1/385 scf CO2/lb-mole at 14.7 psia and 68 °F.

3. Procedures for Estimating CO_2 Emissions From Sorbent

When the affected unit has a wet flue gas desulfurization system, is a fluidized bed boiler, or uses other emission controls with sorbent injection, use either a CO_2 continuous emission monitoring system or an O_2 monitor and a flow monitor, or use the procedures, methods, and equations in sections 3.1 through 3.2 of this appendix to determine daily CO_2 mass emissions from the sorbent (in tons).

3.1 When limestone is the sorbent material, use the equations and procedures in either section 3.1.1 or 3.1.2 of this appendix.

3.1.1 Use the following equation to estimate daily CO_2 mass emissions from sorbent (in tons).

$$SE_{CO_2} = W_{CaCO_3} F_u \frac{MW_{CO_2}}{MW_{CaCO_3}}$$

(Eq. G–5)

where,

SE_{CO2}=CO_2 emitted from sorbent, tons/day.

W_{CaCO3}=$CaCO_3$ used, tons/day.

F_u=1.00, the calcium to sulfur stoichiometric ratio.

MW_{CO2}=Molecular weight of carbon dioxide (44).

MW_{CaCO3}=Molecular weight of calcium carbonate (100).

3.1.2 In lieu of using Equation G–5, any owner or operator who operates and maintains a certified SO_2-diluent continuous emission monitoring system (consisting of an SO_2 pollutant concentration monitor and an O_2 or CO_2 diluent gas monitor), for measuring and recording SO_2 emission rate (in lb/mmBtu) at the outlet to the emission controls and who uses the applicable procedures, methods, and equations in §75.15 of this part to estimate the SO_2 emissions removal efficiency of the emission controls, may use the following equations to estimate daily CO_2 mass emissions from sorbent (in tons).

$$SE_{CO_2} = F_u \frac{W_{SO_2}}{2000} \frac{MW_{CO_2}}{MW_{SO_2}}$$

(Eq. G–6)

where,

SE_{CO2}=CO_2 emitted from sorbent, tons/day.

MW_{CO2}=Molecular weight of carbon dioxide (44).

MW_{SO2}=Molecular weight of sulfur dioxide (64).

W_{SO2}=Sulfur dioxide removed, lb/day, as calculated below using Eq. G–7.

F_u=1.0, the calcium to sulfur stoichiometric ratio.

and

$$W_{SO_2} = SO_{2o} \frac{\%R}{(100 - \%R)} \qquad \text{(Eq. G–7)}$$

(Eq. G–7)

where:

WSO_2=Weight of sulfur dioxide removed, lb/day.

SO_{20}=SO_2 mass emissions monitored at the outlet, lb/day, as calculated using the equations and procedures in section 2 of appendix F of this part.

%R=Overall percentage SO_2 emissions removal efficiency, calculated using Equations 1 through 7 in §75.15 using daily instead of annual average emission rates.

3.2 When a sorbent material other than limestone is used, modify the equations, methods, and procedures in Section 3.1 of this appendix as follows to estimate daily CO_2 mass emissions from sorbent (in tons).

3.2.1 Determine a site-specific value for F_u, defined as the ratio of the number of moles of CO_2 released upon capture of one mole of SO_2, using methods and procedures satisfactory to the Administrator. Use this value of F_u (instead of 1.0) in either Equation G–5 or Equation G–6.

3.2.2 When using Equation G–5, replace MW_{CaCO3}, the molecular weight of calcium carbonate, with the molecular weight of the sorbent material that participates in the reaction to capture SO_2 and that releases CO_2, and replace W_{CaCO3}, the amount of calcium carbonate used (in tons/day), with the amount of sorbent material used (in tons/day).

4. Procedures for Estimating Total CO_2 Emissions

When the affected unit has a wet flue gas desulfurization system, is a fluidized bed boiler, or uses other emission controls with sorbent injection, use the following equation to obtain total daily CO_2 mass emissions (in tons) as the sum of combustion-related emissions and sorbent-related emissions.

W_t=W_{CO2}+SE_{CO2}

(Eq. G–8)

where,

W_t=Estimated total CO_2 mass emissions, tons/day.

W_{CO2}=CO_2 emitted from fuel combustion, tons/day.
SE_{CO2}=CO_2 emitted from sorbent, tons/day.

[58 FR 3701, Jan. 11, 1993, as amended at 60 FR 26556-26557, May 17, 1995; 61 FR 25585, May 22, 1996]

APPENDIX H TO PART 75—REVISED TRACEABILITY PROTOCOL NO. 1

This appendix consists of section 3.0.4 of the Quality Assurance Handbook for Air Pollution Measurement Systems, Vol. 3, U.S. Environmental Protection Agency (revised 6/9/87). The Quality Assurance Handbook may be obtained from the Methods Research and Development Division, MD 78–A, Atmospheric Research Exposure and Assessment Laboratory, U.S. Environmental Protection Agency, Research Triangle Park, North Carolina 27711.

3.0.4. PROCEDURE FOR NBS-TRACEABLE CERTIFICATION OF COMPRESSED GAS WORKING STANDARDS USED FOR CALIBRATION AND AUDIT OF CONTINUOUS SOURCE EMISSION MONITORS (REVISED TRACEABILITY PROTOCOL NO. 1)

CONTENTS

Subsection	*Title*
3.0.4.0	General Information
3.0.4.1	*Procedure G1:* Assay and Certification of a Compressed Gas Standard Without Dilution
3.0.4.2	References

4.0 GENERAL INFORMATION

4.0.1 PURPOSE AND SCOPE OF THE PROCEDURE

Section 3.0.4 describes a procedure for assaying the concentration of gaseous pollutant concentration standards and certifying that the assay concentrations are traceable to an authoritative reference concentration standard. This procedure is recommended for certifying the local working concentration standards required by the pollutant monitoring regulations of 40 CFR Part 60[1,2] for the calibration and audit of continuous source emission monitors. The procedure covers certification of compressed gas (cylinder) standards for CO, CO_2, NO, NO_2, and SO_2 (Procedure G1).

4.0.2 REFERENCE STANDARDS

Part 60 of the monitoring regulations [1,2] requires that working standards used for calibration and audit of continuous source emission monitors be traceable to either a National Bureau of Standards (NBS) gaseous Standard Reference Material (SRM or a NBS/EPA-approved Certified reference material (CRM) [3]. Accordingly, the reference standard used for assaying and certifying a working standard for these purposes must be an SRM, a CRM, or a suitable intermediate standard (see the next paragraph). SRM cylinder gas standards available from NBS are listed in Table 7.2 at the end of subsection 4.0. A current list of CRM cylinder gases and CRM vendors is available from the Quality Assurance Division (MD–77), Environmental Monitoring Systems Laboratory, U.S. EPA, Research Triangle Park, NC 27711.

The EPA regulations define a ''traceable'' standard as one which''. . . has been compared and certified, either directly or via not more than one intermediate standard, to a primary standard such as a . . . NBS [gaseous] SRM or . . . CRM''[4,5]. Certification of a working standard directly to an SRM or CRM primary standard is, of course, preferred and recommended because of the lower error. However, an intermediate reference standard is permitted, if necessary. In particular, a *Gas Manufacturer's Intermediate Standard* (see subsection 4.0.2.1) that has been referenced directly to an SRM or a CRM according to Procedure G1 is an acceptable intermediate standard and could be used as the reference standard on that basis. However, purchasers of commercial gas standards referenced to an intermediate standard such as a GMIS should be aware that, according to the above definition, such a standard would have to be used directly for calibration or audit. Since a second intermediate standard is not permitted, such a standard could not be used as a reference standard to certify other standards.

4.0.2.1 *Gas Manufacturer's Intermediate Standard (GMIS).* A GMIS is a compressed (cylinder) gas standard that has been assayed with direct reference to an SRM or CRM and certified according to Procedure G1, and also meets the following requirements:

1. A candidate GMIS must be assayed a minimum of three (3) times, uniformly spaced over a three (3) month period.

2. Each of the three (or more) assays must be within 1.0 percent of the mean of the three (or more) assays.

3. The difference between the last assay and the first assay must not exceed 1.5 percent of the mean of the three (or more) assays.

4. The GMIS must be recertified every three months, and the reassay must be within 1.5 percent of the previous certified assay. The recertified concentration of the GMIS is the mean of the previous certified concentration and the reassay concentration.

4.0.2.2 *Recertification of Reference Standards.* Recertification requirements for SRMs and CRMs are specified by NBS and NBS/EPA, respectively. See 4.0.2.1 for GMIS recertification requirements.

4.0.3 USING THE PROCEDURE

The assay/certification procedure described here is carefully designed to minimize both systematic and random errors in the assay process. Therefore, the procedure should be carried out as closely as possible to the way it is described. Similarly, the assay apparatus has been specifically designed to minimize errors and should be configured as closely as possible to the design specified. Good laboratory practice should be observed in the selection of inert materials (e.g. Teflon, stainless steel, or glass, if possible) and clean, non-contaminating components for use in portions of the apparatus in contact with the candidate or reference gas concentrations.

4.0.4 CERTIFICATION DOCUMENTATION

Each assay/certification must be documented in a written certification report signed by the analyst and containing at least the following information:

1. Identification number (cylinder number).
2. Certified concentration of the standard, in ppm or mole percent.
3. Balance gas in the standard mixture.
4. Cylinder pressure at certification.
5. Date of the assay/certification.
6. Certification expiration date (see 4.0.6.3).
7. Identification of the reference standard used: SRM number, cylinder number, and concentration for an SRM; cylinder number and concentration for a CRM or GMIS.
8. Statement that the assay/certification was performed according to this section 3.0.4.
9. Identification of the laboratory where the standard was certified and the analyst who performed the certification.
10. Identification of the gas analyzer used for the certification, including the make, model, serial number, the measurement principle, and the date of the last multipoint calibration.
11. All analyzer readings used during the assay/certification and the calculations used to obtain the reported certified value.
12. Chronological record of all certifications for the standard.

Certification concentrations should be reported to 3 significant digits. Certification documentation should be maintained for at least 3 years.

4.0.5 CERTIFICATION LABEL

A label or tag bearing the information described in items 1 through 9 of subsection 4.0.4 must be attached to each certified gas cylinder.

4.0.6 Assay/Certification of Compressed Gas (Cylinder) Standards

4.0.6.1 *Aging of newly-prepared gas standards.* Freshly prepared gas standard concentrations and newly filled gas cylinders must be aged before being assayed and certified. SO_2 concentrations contained in steel cylinders must be aged at least 15 days; other standards must be aged at least 4 days.

4.0.6.2 *Stability test for reactive gas standards.* Reactive gas standards, including nitric oxide (NO), nitrogen dioxide (NO_2), sulfur dioxide (SO_2), and carbon monoxide (CO), that have not been previously certified must be tested for stability as follows: Reassay the concentration at least 7 days after the first assay and compare the two assays. If the second assay differs from the first assay by 1.5% or less, the cylinder may be considered stable, and the mean of the two assays should be reported as the certified concentration. Otherwise, age the cylinder for a week or more and repeat the test, using the second and third assays as if they were the first and second assays. Cylinders that are not stable may not be sold and/or used for calibration or audit purposes.

4.0.6.3 *Recertification of compressed gas standards.* Compressed gas standards must be recertified according to this section 3.0.4 within the time limits specified in Table 7.1[3,6,7]. The reassay concentration must be within 5% of the previous certified concentration. If not, the cylinder must be retested for stability (subsection 4.0.6.2). The certified concentration of a recertified standard should be reported as the mean of all assays, unless a clear trend or substantial change suggests that previous assays are no longer valid.

TABLE 7.1.—RECERTIFICATION LIMITS FOR COMPRESSED GAS STANDARDS

Pollutant	Balance gas [1]	Concentration range	Maximum months until recertification for cylinder material	
			Passivated Aluminum	Other
Carbon monoxide	N_2 or air	≥ 8 ppm	36	6
Nitric oxide	N_2	≥ 5 ppm	24	6
Sulfur dioxide	N_2 or air	50–499 ppm	24	6
Sulfur dioxide	N_2 or air	≥ 500 ppm	36	6
Oxides of nitrogen	Air	≥ 100 ppm	24	6
Nitrogen dioxide	Air	≥ 1000 ppm	24	6
Carbon dioxide	N_2 or air	≥ 300 ppm	36	18
Carbon dioxide and oxygen, (i.e. blood gas).	N_2	≥ 5% CO_2, ≥0% O_2	36	6

TABLE 7.1.—RECERTIFICATION LIMITS FOR COMPRESSED GAS STANDARDS—Continued

Pollutant	Balance gas [1]	Concentration range	Maximum months until recertification for cylinder material	
			Passivated Aluminum	Other
Oxygen	N_2	≥ 2 percent	36	18
Carbon dioxide and nitrous oxide	Air	≥ 300 ppm CO_2, ≥300 ppb N_2O	36	6
Others not specifically listed			6	6
Multicomponent mixtures	___	___	See [2]	6
Mixtures with lower concentrations.	___	___	See [3]	6

[1] When used as a balance gas, "air" is defined as a mixture of O_2 and N_2 where the minimum concentration of O_2 is 10% and the concentration of N_2 is greater than 60%.

[2] This protocol may be used to assay and certify individual components of multicomponent standards, provided that none of the components interferes with the analysis of other components and provided that individual components must not react with each other or with the balance gas. A multicomponent standard can be certified for a period of time equal to that of its most briefly certifiable component. For example, a standard containing 250 ppm sulfur dioxide and 100 ppm carbon monoxide in nitrogen can be certified for 24 months because the shortest certification period is 24 months.

[3] This protocol may be used for the certification of standards with concentrations that may be lower than those listed in Table 7.1. The initial certification period for such a lower concentration standard is 6 months. After this period, the standards may be recertified. If the recertification demonstrates that the standard is not unstable, the second certification period for this lower concentration standard is the same time period as indicated for the corresponding concentration standard listed in Table 7.1.

4.0.6.4 *Minimum cylinder pressure.* No compressed gas cylinder standard should be used when its gas pressure is below 700 kPa (100 psi), as indicated by the cylinder pressure gauge.

4.0.6.5 *Assay/certification of multi-component compressed gas standards.* Procedure G1 may be used to assay and certify individual components of multi-component gas standards, provided that none of the components other than the component being assayed cause a detectable response on the analyzer.

4.0.7 ANALYZER CALIBRATION

4.0.7.1 *Basic analyzer calibration requirements.* The assay procedure described in this section 3.0.4 employs a direct ratio referencing technique that inherently corrects for minor analyzer calibration variations (drift) and DOES NOT depend on the absolute accuracy of the analyzer calibration. What is required of the analyzer is as follows: 1) it must have a *linear* response to the pollutant of interest (see subsection 4.0.7.5), 2) it must have good resolution and low noise, 3) its response calibration must be reasonably stable during the assay/certification process, and 4) all assay concentration measurements must fall within the calibrated response range of the analyzer.

4.0.7.2 *Analyzer multipoint calibration.* The gas analyzer used for the assay/certification must have had a multipoint calibration within 3 months of its use when used with this procedure. This calibration is *not* used to quantitatively interpret analyzer readings during the assay/certification of the candidate gas because a more accurate, direct ratio comparison of the candidate concentration to the reference standard concentration is used. However, this multipoint calibration is necessary to establish the calibrated range of the analyzer and its response linearity.

The multipoint calibration should consist of analyzer responses to at least 5 concentrations, including zero, approximately evenly spaced over the concentration range. Analyzer response units may be volts, millivolts, percent of scale, or other measurable analyzer response units. The upper range limit of the calibrated range is determined by the highest calibration point used. If the analyzer has a choice of concentration ranges, the optimum range for the procedure should be selected and calibrated. Plot the calibration points and compute the linear regression slope and intercept. See subsection 4.0.7.5 for linearity requirements and the use of a mathematical transformation, if needed. The intercept should be less than 1 percent of the upper concentration range limit, and the correlation coefficient (r) should be at least 0.999.

4.0.7.3 *Zero and span check and adjustment.* On each day that the analyzer will be used for assay/certification, its response calibration must be checked with a zero and at least one span concentration near the upper concentration range limit. If necessary, the zero and span controls of the analyzer should be adjusted so that the analyzer's response (i.e. calibration slope) is within about ±5 per cent of the response indicated by the most recent multipoint calibration. If a zero or span adjustment is made, allow the analyzer to stabilize for at least an hour or more before beginning the assay procedure, since some analyzers drift for a period of time following zero or span adjustment. If the analyzer is not in continuous operation, turn it on and allow it to stabilize for at least 12 hours before the zero and span check.

4.0.7.4 *Pollutant standard for multipoint calibration and zero and span adjustment.* The pollutant standard or standards used for multipoint calibration or zero and span checks or adjustments must be obtained from a compressed gas standard certified traceable to an NBS SRM or a NBS/EPA CRM according to Procedure G1 of this section 3.0.4. This standard need not be the same as the reference standard used in the assay/certification. The zero gas must meet the requirements in subsection 4.0.8.

4.0.7.5 *Linearity of analyzer response.* The direct ratio assay technique used in Procedure G1 requires that the analyzer have a linear response to concentration. Linearity is determined by comparing the quantitative difference between a smoothly-drawn calibration curve based on all calibration points and a straight line drawn between zero and an upper reference point (see Figure 1). This difference is measured in concentration units, parallel to the concentration axis, from a point on the calibration curve to the corresponding point for the same response on the straight line.

For the general linearity requirement, the straight line is drawn between zero and the highest calibration point (Figure 1a). Linearity is then acceptable when no point on the smooth calibration curve deviates from the straight line by more than 1.5 percent of the value of the highest calibration concentration. An alternative linearity requirement is defined on the basis of the actual reference and candidate concentrations to be used for the assay. In this case, the reference and candidate concentrations are plotted on the calibration curve, and the straight line is drawn from zero to the reference concentration and extrapolated, if necessary, beyond the candidate concentration (Figure 1b). The deviation of the smooth calibration curve from the straight line at the candidate concentration point then must not exceed 0.8 percent of the value of the reference concentration. This latter specification may allow the use of an analyzer having greater nonlinearity when the reference and candidate concentrations are nearly the same.

For analyzers having an inherently nonlinear response, the response can usually be linearized with a simple mathematical transformation of the response values, such as R′=square root(R) or R′=log(R), where R′ is the transformed response value and R is the actual analyzer response value. Using the transformed response values, the multipoint calibration should meet one of the above linearity requirements as well as the requirements for intercept and correlation coefficient given in subsection 4.0.7.2.

4.0.8 Zero Gas

Zero gas used for dilution of any candidate or reference standard should be clean, dry, zero-grade air or nitrogen containing a concentration of the pollutant of interest equivalent to less than 0.5 percent of the analyzer's upper range limit concentration. The zero gas also should contain no contaminant that causes a detectable response on the analyzer or that suppresses or enhances the analyzer's response to the pollutant. The oxygen content of zero air should be the same as that of ambient air.

4.0.9 Accuracy Assessment of Commercially Available Standards

Periodically, the USEPA will assess the accuracy of commercially available compressed gas standards that have been assayed and certified according to this section 3.0.4. Accuracy will be assessed by EPA audit analysis of representative actual commercial standards obtained via an anonymous agent. The accuracy audit results, identifying the actual gas manufacturers or vendors, will be published as public information.

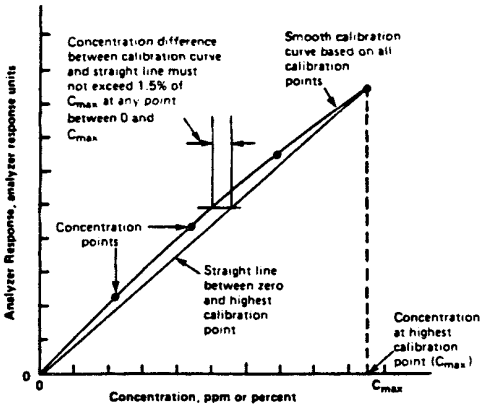

a) General linearity requirement

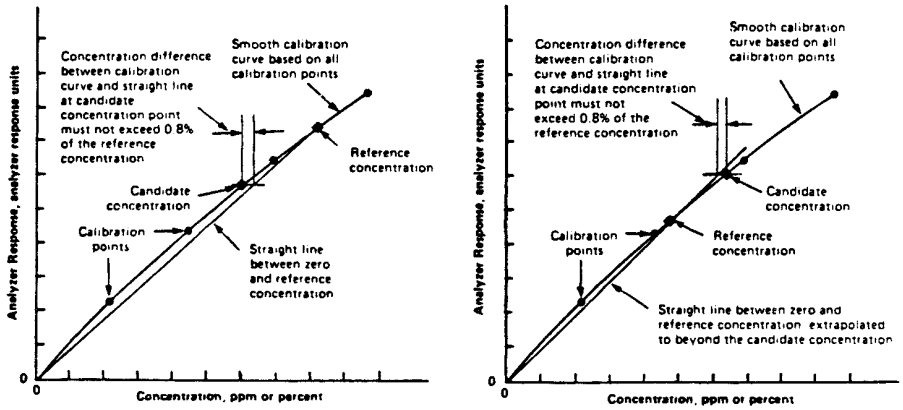

b) Alternative linearity requirement

Figure 1. Illustration of linearity requirements.

TABLE 7.2.—NBS SRM REFERENCE GASES

SRM No.	Type	Nominal concentration
2627	NO/N_2	5 ppm.
2628	NO/N_2	10 ppm.
2629	NO/N_2	20 ppm.
1683b	NO/N_2	50 ppm.
1684b	NO/N_2	100 ppm.
1685b	NO/N_2	250 ppm.
1686b	NO/N_2	500 ppm.
1687b	NO/N_2	1000 ppm.
2630	NO/N_2	1500 ppm.
2631	NO/N_2	3000 ppm.
2653	$NO/_2$ Air	250 ppm.
2654	$NO/_2$ Air	500 ppm.

TABLE 7.2.—NBS SRM REFERENCE GASES—Continued

SRM No.	Type	Nominal concentration
2655	$NO/_2$ Air	1000 ppm.
2656	$NO/_2$ Air	2500 ppm.
2612a	CO/Air	10 ppm.
2613a	CO/Air	20 ppm.
2614a	CO/Air	45 ppm.
1677c	CO/N_2	10 ppm.
2635	CO/N_2	25 ppm.
1678c	CO/N_2	50 ppm.
1679c	CO/N_2	100 ppm.
2636	CO/N_2	250 ppm.

TABLE 7.2.—NBS SRM REFERENCE GASES—Continued

SRM No.	Type	Nominal concentration
1680c	CO/N_2	500 ppm.
1681c	CO/N_2	1000 ppm.
2637	CO/N_2	2500 ppm.
2638	CO/N_2	5000 ppm.
2639	CO/N_2	1 percent.
2640	CO/N_2	2 percent.
2641	CO/N_2	4 percent.
2642	CO/N_2	8 percent.
2657	O_2/N_2	2 percent.
2658	O_2/N_2	10 percent.
2659	O_2/N_2	21 percent.
1693	SO_2/N_2	50 ppm.
1694	SO_2/N_2	100 ppm.
1661a	SO_2/N_2	500 ppm.
1662a	SO_2/N_2	1000 ppm.
1663a	SO_2/N_2	1500 ppm.
1664a	SO_2/N_2	2500 ppm.
1696	SO_2/N_2	3500 ppm.
1670	CO_2/Air	330 ppm.
1671	CO_2/Air	340 ppm.
1672	CO_2/Air	350 ppm.
2632	CO_2/N_2	300 ppm.
2633	CO_2/N_2	400 ppm.
2634	CO_2/N_2	800 ppm.
2619a	CO_2/N_2	0.5 percent.
2720a	CO_2/N_2	1.0 percent.
2621a	CO_2/N_2	1.5 percent.
2622a	CO_2/N_2	2.0 percent.
2623a	CO_2/N_2	2.5 percent.
2624a	CO_2/N_2	3.0 percent.
2625a	CO_2/N_2	3.5 percent.
2626a	CO_2/N_2	4.0 percent.
1674b	CO_2/N_2	7.0 percent.
1675b	CO_2/N_2	14.0 percent.
1665b	C_3H_8/Air	3 ppm.
1666b	C_3H_8/Air	10 ppm.
1667b	C_3H_8/Air	50 ppm.
1668b	C_3H_8/Air	100 ppm.
1669b	C_3H_8/Air	500 ppm.
2643	C_3H_8/N_2	100 ppm.
2644	C_3H_8/N_2	250 ppm.
2645	C_3H_8/N_2	500 ppm.
2646	C_3H_8/N_2	1000 ppm.
2647	C_3H_8/N_2	2500 ppm.
2648	C_3H_8/N_2	5000 ppm.
2649	C_3H_8/N_2	1 percent.
2650	C_3H_8/N_2	2 percent.

NBS–SRM cylinders contain approximately 870 liters of gas at STP.

For availability, contact: Office of Standard Reference Materials, Chemistry Building, Room B311, NBS, Gaithersburg, Maryland 20899, (301) 975–6776. (FTS 879–6776).

4.1 *Procedure G1:* Assay and Certification of a Compressed Gas Standard Without Dilution

4.1.1 Applicability

This procedure may be used to assay the concentration of a candidate compressed gas (cylinder) pollutant standard, based on the concentration of a compressed gas (cylinder) reference standard of the same pollutant compound, and certify that the assayed concentration thus established for the candidate standard is traceable to the reference standard. The procedure employs a pollutant gas analyzer to compare the candidate and reference gas concentrations by direct measurement—without dilution of either gas—to minimize assay error.

4.1.2 LIMITATIONS

1. The concentration of the candidate gas standard must be between 0.3. and 1.3 times the concentration of the reference gas standard.

2. The analyzer must have a calibrated range capable of directly measuring both the candidate and the reference gas concentrations.

3. The analyzer's response (or transformed response) must be linear with respect to concentration.

4. The balance gas in both the candidate and reference standards must be identical, unless it can be shown that the analyzer is insensitive to any difference in the balance gases.

5. A source of clean, dry zero gas is required.

4.1.3 ASSAY APPARATUS

Figure G1 illustrates the relatively simple assay apparatus. The configuration is designed to allow convenient routing of the zero gas and undiluted samples of the reference gas and candidate gases, in turn, to the analyzer for measurement, as selected by three-way valves V1 and V2. Pressure regulators and needle valves (V3 and V4) control the individual gas flows. The pollutant concentrations are delivered to the analyzer via a vented tee, which discharges excess flow and insures that the assay concentrations sampled by the analyzer are always at a fixed (atmospheric) pressure. A small, uncalibrated rotameter monitors the vent flow to verify that the total gas flow rate exceeds the sample flow rate demand of the analyzer so that no room air is admitted through the vent. Valves V1 and V2 could be replaced by a single four-way valve (with 3 inputs and 1 output) or by manually moving the output connection to each of the gases as needed. See also subsection 4.0.3.

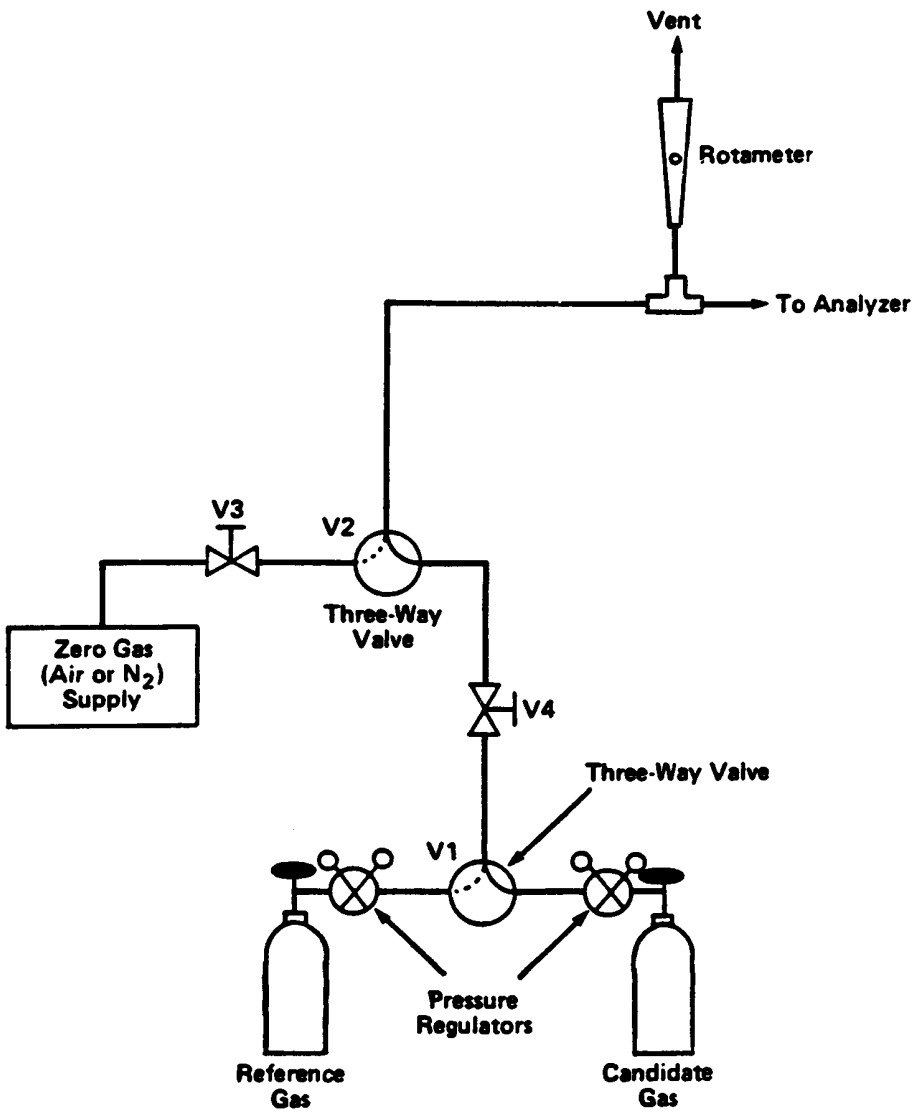

4.1.4 Analyzer

See subsection 4.0.7.1. The pollutant gas analyzer must have a linear response function and a calibrated range capable of measuring the full concentration of both the candidate and the reference gas standards directly, without dilution. It must have good resolution (readability), good precision, a stable response, and low output signal noise. In addition, the analyzer must have good specificity for the pollutant of interest so that it has no detectable response to any contaminant that may be contained in either the candidate or reference gas. If the candidate and reference gases contain dissimilar balance gases (air versus nitrogen or different proportions of oxygen in the balance air, for example), the analyzer must be proven to be insensitive to the different balance gases. This may be accomplished by showing

no difference in analyzer response when measuring pollutant concentrations diluted with identical flow rates of the two balance gases.

The analyzer should be connected to a suitable, precision chart recorder or other data acquisition device to facilitate graphical observation and documentation of the analyzer responses obtained during the assay.

4.1.5 ANALYZER CALIBRATION

4.1.5.1 *Multipoint calibration.* See subsections 4.0.7.2 and 4.0.7.4.

4.1.5.2 *Calibration range.* The calibrated range of the analyzer must include both the candidate and reference gas concentrations, such that the higher concentration does not exceed 97 percent of the upper range limit, and the lower concentration is not below 25 percent of the upper range limit (assuming a lower range limit of zero). Within these limits, select a calibrated analyzer range that will produce the highest analyzer responses.

4.1.5.3 *Linearity.* The direct ratio assay technique used in this procedure requires that the analyzer have a linear response to concentration (see subsection 4.0.7.5). High-concentration-range analyzers of the type that are required for this procedure may not be inherently linear, but they usually have a predictable, non-linear response characteristic that can be mathematically transformed to produce a sufficiently linear response characteristic suitable for use in this procedure. Any such response transformation should be verified by using it for the multipoint calibration. Caution should be exercised in using a transformed response curve because physical zero or span adjustments to the analyzer may produce unexpected effects on the transformed characteristic.

4.1.5.4 *Zero and span adjustment.* See subsections 4.0.7.3 and 4.0.7.4. Prior to carrying out the assay/certification procedure, check the calibration of the analyzer and, if necessary, adjust the analyzer's zero and span controls to reestablish the response characteristic determined at the most recent multipoint calibration. Allow the analyzer to stabilize for an hour or more after any zero or span adjustment. If there is any doubt that a transformed response characteristic is still linear following a zero or span adjustment, verify linearity with a multipoint calibration (subsection 4.0.7.2) using at least 3 known pollutant concentrations, including zero.

4.1.6 ASSAY GASES

4.1.6.1 *Candidate gas standard.* See subsections 4.0.6 and 4.1.2.

4.1.6.2 *Reference gas standard.* See subsections 4.0.2, 4.1.2, and 4.0.6.4. Select a reference standard such that the concentration of the candidate gas is not more than 30 percent above nor less than 70 percent below the concentration of the standard.

4.1.6.3 *Zero gas.* See subsection 4.0.8. The zero gas should match the balance gas used in the cylinder concentrations.

4.1.7 ASSAY PROCEDURE

1. Verify that the assay apparatus is properly configured, as described in subsection 4.1.3 and shown in Figure G1.

2. Verify that the linearity of the analyzer has been checked within the last 3 months (see subsections 4.0.7.2, 4.0.7.5, and 4.1.4), that the zero and span are adjusted correctly (subsection 4.0.7.3), that the candidate and reference gas concentrations are within 25 and 97 percent of the upper range limit of the calibrated measurement range of the analyzer, and that the analyzer is operating stably.

3. Adjust the flow rates of the three gases (reference, candidate, and zero) to approximately the same value that will provide enough flow for the analyzer and sufficient excess to assure that no ambient air will be drawn into the vent.

4. Conduct a triad of measurements with the analyzer. Each triad consists of a measurement of the zero gas concentration, a measurement of the reference gas concentration, and a measurement of the candidate gas concentration. Use valves V1 and V2 to select each of the three concentrations for measurement. For each measurement, allow ample time for the analyzer to achieve a stable response reading. Record the stable analyzer response for each measurement, using the same response units (volt, millivolts, percent of scale, etc.) used for the multipoint calibration and any transformation of the response readings necessary for linearity. Do not translate the response readings to concentration values via the calibration curve (see the footnote following Equation G1). Do not make any zero, span, or other physical adjustments to the analyzer during the triad of measurements.

5. Conduct at least 2 additional measurement triads, similar to step 4 above. However, for these subsequent triads, change the order of the three measurements (e.g. measure reference gas, zero gas, candidate gas for the second triad and zero gas, candidate gas, reference gas for the third triad, etc.).

6. If any one or more of the measurements of a triad is invalid or abnormal for any reason, discard all three measurements of the triad and repeat the triad.

7. For each triad of measurements, calculate the assay concentration of the candidate gas as follows:

$$C_c = C_r \frac{R_c - R_z}{R_r - R_z}$$

Equation G1

where:

C_c=Assay concentration of the candidate gas standard, ppm or percent;

C_r=Concentration of the reference gas standard, ppm or percent;

R_c=Stable response reading of the analyzer for the candidate gas, analyzer response units;*

R_z=Stable response reading of the analyzer for the zero gas, analyzer response units;*

R_r=Stable response reading of the analyzer for the reference gas, analyzer response units.*

*Analyzer response units are the units used to express the *direct* response readings of the analyzer, such as volts, millivolts, percent of scale, etc. DO NOT convert these direct response readings to concentration units with the multipoint calibration curve or otherwise adjust these readings except for transformation necessary to achieve response linearity.

8. Calculate the mean of the 3 (or more) valid assays. Calculate the percent difference of each assay from the mean. If any one of the assay values differs from the mean by more than 1.5%, discard that assay value and conduct another triad of measurements to obtain another assay value. When at least 3 assay values all agree within 1.5% of their mean, report the mean value as the certified concentration of the candidate gas standard. For newly-prepared reactive standards, a reassay at least 7 days later is required to check the stability of the standard; see subsection 4.0.6.2.

4.1.8 Stability Test for Newly-Prepared Standards

See subsections 4.0.6.1 and 4.0.6.2.

4.1.9 Certification Documentation

See subsections 4.0.4 and 4.0.5.

4.1.10 Recertification Requirements

See subsections 4.0.6.3 and 4.0.6.4.

4.2 References

1. Code of Federal Regulations, title 40, part 60, ''Standards of Performance for New Stationary Sources,'' appendix A, Method 20 (1982).

2. Standards of Performance for New Stationary Sources; Quality Assurance Requirements for Gaseous Continuous Emission Monitoring Systems Used for Compliance Determination, promulgated in the Federal Register, June 4, 1987, pp. 21003–21010.

3. ''A Procedure for Establishing Traceability of Gas Mixtures to Certain National Bureau of Standards Standard Reference Materials. EPA–600/7–81–010. Joint publication by NBS and EPA, May 1981. Available from the U.S. Environmental Protection Agency, Environmental Monitoring Systems Laboratory (MD–77), Research Triangle Park, NC 27711.

4. Code of Federal Regulation, title 40, part 50, ''National Ambient Air Quality Measurement Methodology''.

5. Code of Federal Regulations, title 40, part 58, ''Ambient Air Quality Surveillance,'' appendixes A and B.

6. Shores, R.C. and F. Smith, ''Stability Evaluation of Sulfur Dioxide, Nitric Oxide, and Carbon Monoxide Gases in Cylinders''. NTIS No. PB 85–122646. Available from the National Technical Information Service, 5285 Port Royal Road, Springfield, VA 22161.

7. Method 6A and 6B, ''Determination of Sulfur Dioxide, Moisture, and Carbon Dioxide Emissions from Fossil Fuel Combustion Sources,'' Quality Assurance Handbook for Air Pollution Measurement Systems, Volume III, Section 3.13.8, July 1986. Available from the U.S. Environmental Protection Agency, Center for Environmental Research Information, Cincinnati, OH 45268.

8. ''List of Designated Reference and Equivalent Methods.'' Current edition available from the U.S. Environmental Protection Agency, Environmental Monitoring Systems Laboratory, Quality Assurance Division (MD–77), Research Triangle Park, NC 27711.

[58 FR 3701, Jan. 11, 1993; 58 FR 40751, 40752, July 30, 1993]

Appendix I to Part 75—Optional F—Factor/Fuel Flow Method [Reserved]

Appendix J to Part 75—Compliance Dates for Revised Recordkeeping Requirements and Missing Data Procedures

1. *Recordkeeping Requirements*

The owner or operator shall meet the recordkeeping requirements of subpart F of this part by following either §§75.50, 75.51 and 75.52 or §§75.54, 75.55 and 75.56, from July 17, 1995 through December 31, 1995. On or after January 1, 1996, the owner or operator shall meet the recordkeeping requirements of subpart F of this part by meeting the requirements of §§75.54, 75.55, and 75.56.

2. *Missing Data Substitution Procedures*

The owner or operator shall meet the missing data substitution requirements for carbon dioxide (CO_2) and heat input by following either §§75.35 and 75.36 or sections 4.3.1

through 4.3.3, section 4.4.3 and sections 5.3 through 5.4 of appendix F of this part from July 17, 1995 through December 31, 1995. The owner or operator shall meet the missing data substitution requirements for fuel flowmeters in appendix D of this part by following either section 2.4.3.1 or sections 2.4.3.2 and 2.4.3.3 of appendix D of this part from July 17, 1995 through December 31, 1995. On or after January 1, 1996, the owner or operator shall meet the missing data substitution requirements for CO_2 concentration, that input and fuel flowmeters by meeting the requirements of §§75.35 and 75.36 and sections 2.4.3.2 through 2.4.3.3 of appendix D of this part.

[60 FR 26557, May 17, 1995]

PART 76—ACID RAIN NITROGEN OXIDES EMISSION REDUCTION PROGRAM

Sec.
76.1 Applicability.
76.2 Definitions.
76.3 General Acid Rain Program provisions.
76.4 Incorporation by reference.
76.5 NO_X emission limitations for Group 1 boilers.
76.6 NO_X emission limitations for Group 2 boilers.
76.7 Revised NO_X emission limitations for Group 1, Phase II boilers.
76.8 Early election for Group 1, Phase II boilers.
76.9 Permit application and compliance plans.
76.10 Alternative emission limitations.
76.11 Emissions averaging.
76.12 Phase I NO_X compliance extensions.
76.13 Compliance and excess emissions.
76.14 Monitoring, recordkeeping, and reporting.
76.15 Test methods and procedures.
76.16 Alternative compliance.

APPENDIX A TO PART 76—PHASE I AFFECTED COAL-FIRED UTILITY UNITS WITH GROUP 1 OR CELL BURNER BOILERS

APPENDIX B TO PART 76—PROCEDURES AND METHODS FOR ESTIMATING COSTS OF NITROGEN OXIDES CONTROLS APPLIED TO GROUP 1, PHASE I BOILERS

AUTHORITY: 42 U.S.C. 7601 and 7651 *et seq.*

SOURCE: 60 FR 18761, Apr. 13, 1995, unless otherwise noted.

§76.1 Applicability.

(a) Except as provided in paragraphs (b) through (d) of this section, the provisions apply to each coal-fired utility unit that is subject to an Acid Rain emissions limitation or reduction requirement for SO_2 under Phase I or Phase II pursuant to sections 404, 405, or 409 of the Act.

(b) The emission limitations for NO_X under this part apply to each affected coal-fired utility unit subject to section 404(d) or 409(b) of the Act on the date the unit is required to meet the Acid Rain emissions reduction requirement for SO_2.

(c) The provisions of this part apply to each coal-fired substitution unit or compensating unit, designated and approved as a Phase I unit pursuant to §72.41 or §72.43 of this chapter as follows:

(1) A coal-fired substitution unit that is designated in a substitution plan that is approved and active as of January 1, 1995 shall be treated as a Phase I coal-fired utility unit for purposes of this part. In the event the designation of such unit as a substitution unit is terminated after December 31, 1995, pursuant to §72.41 of this chapter and the unit is no longer required to meet Phase I SO_2 emissions limitations, the provisions of this part (including those applicable in Phase I) will continue to apply.

(2) A coal-fired substitution unit that is designated in a substitution plan that is not approved or not active as of January 1, 1995, or a coal-fired compensating unit, shall be treated as a Phase II coal-fired utility unit for purposes of this part.

(d) The provisions of this part for Phase I units apply to each coal-fired transfer unit governed by a Phase I extension plan, approved pursuant to §72.42 of this chapter, on January 1, 1997. Notwithstanding the preceding sentence, a coal-fired transfer unit shall be subject to the Acid Rain emissions limitations for nitrogen oxides beginning on January 1, 1996 if, for that year, a transfer unit is allocated fewer Phase I extension reserve allowances than the maximum amount that the designated representative could have requested in accordance with §72.42(c)(5) of this chapter (as adjusted under §72.42(d) of this chapter) unless the transfer unit is the last unit allocated Phase I extension reserve allowances under the plan.

§ 76.2 Definitions.

All terms used in this part shall have the meaning set forth in the Act, in § 72.2 of this chapter, and in this section as follows:

Alternative contemporaneous annual emission limitation means the maximum allowable NO_X emission rate (on a lb/mmBtu, annual average basis) assigned to an individual unit in a NO_X emissions averaging plan pursuant to § 76.10.

Alternative technology means a control technology for reducing NO_X emissions that is outside the scope of the definition of low NO_X burner technology. Alternative technology does not include overfire air as applied to wall-fired boilers or separated overfire air as applied to tangentially fired boilers.

Approved clean coal technology demonstration project means a project using funds appropriated under the Department of Energy's ''Clean Coal Technology Demonstration Program,'' up to a total amount of $2,500,000,000 for commercial demonstration of clean coal technology, or similar projects funded through appropriations for the Environmental Protection Agency. The Federal contribution for a qualifying project shall be at least 20 percent of the total cost of the demonstration project.

Arch-fired boiler means a dry bottom boiler with circular burners, or coal and air pipes, oriented downward and mounted on waterwalls that are at an angle significantly different from the horizontal axis and the vertical axis. This definition shall include only the following units: Holtwood unit 17, Hunlock unit 6, and Sunbury units 1A, 1B, 2A, and 2B. This definition shall exclude dry bottom turbo fired boilers.

Cell burner boiler means a wall-fired boiler that utilizes two or three circular burners combined into a single vertically oriented assembly that results in a compact, intense flame. Any low NO_X retrofit of a cell burner boiler that reuses the existing cell burner, close-coupled wall opening configuration would not change the designation of the unit as a cell burner boiler.

Coal-fired utility unit means a utility unit in which the combustion of coal (or any coal-derived fuel) on a Btu basis exceeds 50.0 percent of its annual heat input during the following calendar year: for Phase I units, in calendar year 1990; and, for Phase II units, in calendar year 1995 or, for a Phase II unit that did not combust any fuel that resulted in the generation of electricity in calendar year 1995, in any calendar year during the period 1990–1995. For the purposes of this part, this definition shall apply notwithstanding the definition in § 72.2 of this chapter.

Combustion controls means technology that minimizes NO_X formation by staging fuel and combustion air flows in a boiler. This definition shall include low NO_X burners, overfire air, or low NO_X burners with overfire air.

Cyclone boiler means a boiler with one or more water-cooled horizontal cylindrical chambers in which coal combustion takes place. The horizontal cylindrical chamber(s) is (are) attached to the bottom of the furnace. One or more cylindrical chambers are arranged either on one furnace wall or on two opposed furnace walls. Gaseous combustion products exiting from the chamber(s) turn 90 degrees to go up through the boiler while coal ash exits the bottom of the boiler as a molten slag.

Demonstration period means a period of time not less than 15 months, approved under § 76.10, for demonstrating that the affected unit cannot meet the applicable emission limitation under § 76.5, 76.6, or 76.7 and establishing the minimum NO_X emission rate that the unit can achieve during long-term load dispatch operation.

Dry bottom means the boiler has a furnace bottom temperature below the ash melting point and the bottom ash is removed as a solid.

Economizer means the lowest temperature heat exchange section of a utility boiler where boiler feed water is heated by the flue gas.

Flue gas means the combustion products arising from the combustion of fossil fuel in a utility boiler.

Group 1 boiler means a tangentially fired boiler or a dry bottom wall-fired boiler (other than a unit applying cell burner technology).

Group 2 boiler means a wet bottom wall-fired boiler, a cyclone boiler, a boiler applying cell burner technology, a vertically fired boiler, an arch-fired

boiler, or any other type of utility boiler (such as a fluidized bed or stoker boiler) that is not a Group 1 boiler.

Low NO_X burners and *low NO_X burner technology* means commercially available combustion modification NO_X controls that minimize NO_X formation by introducing coal and its associated combustion air into a boiler such that initial combustion occurs in a manner that promotes rapid coal devolatilization in a fuel-rich (i.e., oxygen deficient) environment and introduces additional air to achieve a final fuel-lean (i.e., oxygen rich) environment to complete the combustion process. This definition shall include the staging of any portion of the combustion air using air nozzles or registers located inside any waterwall hole that includes a burner. This definition shall exclude the staging of any portion of the combustion air using air nozzles or ports located outside any waterwall hole that includes a burner (commonly referred to as NO_X ports or separated overfire air ports).

Maximum Continuous Steam Flow at 100% of Load means the maximum capacity of a boiler as reported in item 3 (Maximum Continuous Steam Flow at 100% Load in thousand pounds per hour), Section C (design parameters), Part III (boiler information) of the Department of Energy's Form EIA–767 for 1995.

Non-plug-in combustion controls means the replacement, in a cell burner boiler, of the portions of the waterwalls containing the cell burners by new portions of the waterwalls containing low NO_X burners or low NO_X burners with overfire air.

Operating period means a period of time of not less than three consecutive months and that occurs not more than one month prior to applying for an alternative emission limitation demonstration period under § 76.10, during which the owner or operator of an affected unit that cannot meet the applicable emission limitation:

(1) Operates the installed NO_X emission controls in accordance with primary vendor specifications and procedures, with the unit operating under normal conditions; and

(2) records and reports quality-assured continuous emission monitoring (CEM) and unit operating data according to the methods and procedures in part 75 of this chapter.

Plug-in combustion controls means the replacement, in a cell burner boiler, of existing cell burners by low NO_X burners or low NO_X burners with overfire air.

Primary vendor means the vendor of the NO_X emission control system who has primary responsibility for providing the equipment, service, and technical expertise necessary for detailed design, installation, and operation of the controls, including process data, mechanical drawings, operating manuals, or any combination thereof.

Reburning means reducing the coal and combustion air to the main burners and injecting a reburn fuel (such as gas or oil) to create a fuel-rich secondary combustion zone above the main burner zone and final combustion air to create a fuel-lean burnout zone. The formation of NO_X is inhibited in the main burner zone due to the reduced combustion intensity, and NO_X is destroyed in the fuel-rich secondary combustion zone by conversion to molecular nitrogen.

Selective catalytic reduction means a noncombustion control technology that destroys NO_X by injecting a reducing agent (e.g., ammonia) into the flue gas that, in the presence of a catalyst (e.g., vanadium, titanium, or zeolite), converts NO_X into molecular nitrogen and water.

Selective noncatalytic reduction means a noncombustion control technology that destroys NO_X by injecting a reducing agent (e.g., ammonia, urea, or cyanuric acid) into the flue gas, downstream of the combustion zone that converts NO_X to molecular nitrogen, water, and when urea or cyanuric acid are used, to carbon dioxide (CO_2).

Stoker boiler means a boiler that burns solid fuel in a bed, on a stationary or moving grate, that is located at the bottom of the furnace.

Tangentially fired boiler means a boiler that has coal and air nozzles mounted in each corner of the furnace where the vertical furnace walls meet. Both pulverized coal and air are directed from the furnace corners along a line tangential to a circle lying in a horizontal plane of the furnace.

Turbo-fired boiler means a pulverized coal, wall-fired boiler with burners arranged on walls so that the individual flames extend down toward the furnace bottom and then turn back up through the center of the furnace.

Vertically fired boiler means a dry bottom boiler with circular burners, or coal and air pipes, oriented downward and mounted on waterwalls that are horizontal or at an angle. This definition shall include dry bottom roof-fired boilers and dry bottom top-fired boilers, and shall exclude dry bottom arch-fired boilers and dry bottom turbo-fired boilers.

Wall-fired boiler means a boiler that has pulverized coal burners arranged on the walls of the furnace. The burners have discrete, individual flames that extend perpendicularly into the furnace area.

Wet bottom means that the ash is removed from the furnace in a molten state. The term ''wet bottom boiler'' shall include: wet bottom wall-fired boilers, including wet bottom turbo-fired boilers; and wet bottom boilers otherwise meeting the definition of vertically fired boilers, including wet bottom arch-fired boilers, wet bottom roof-fired boilers, and wet bottom top-fired boilers. The term ''wet bottom boiler'' shall exclude cyclone boilers and tangentially fired boilers.

[60 FR 18761, Apr. 13, 1995, as amended at 61 FR 67162, Dec. 19, 1996]

§ 76.3 General Acid Rain Program provisions.

The following provisions of part 72 of this chapter shall apply to this part:

(a) § 72.2 (Definitions);

(b) § 72.3 (Measurements, abbreviations, and acronyms);

(c) § 72.4 (Federal authority);

(d) § 72.5 (State authority);

(e) § 72.6 (Applicability);

(f) § 72.7 (New unit exemption);

(g) § 72.8 (Retired units exemption);

(h) § 72.9 (Standard requirements);

(i) § 72.10 (Availability of information); and

(j) § 72.11 (Computation of time).

In addition, the procedures for appeals of decisions of the Administrator under this part are contained in part 78 of this chapter.

§ 76.4 Incorporation by reference.

(a) The materials listed in this section are incorporated by reference in the sections noted. These incorporations by reference (IBR's) were approved by the Director of the Federal Register in accordance with 5 U.S.C. 552(a) and 1 CFR part 51. These materials are incorporated as they existed on the date of approval, and notice of any change in these materials will be published in the FEDERAL REGISTER. The materials are available for purchase at the corresponding address noted below and are available for inspection at the Office of the Federal Register, 800 North Capitol St., NW., 7th Floor, Suite 700, Washington, DC, at the Public Information Reference Unit, U.S. EPA, 401 M Street, SW., Washington, DC, and at the Library (MD–35), U.S. EPA, Research Triangle Park, North Carolina.

(b) The following materials are available for purchase from at least one of the following addresses: American Society for Testing and Materials (ASTM), 1916 Race Street, Philadelphia, Pennsylvania 19103; or the University Microfilms International, 300 North Zeeb Road, Ann Arbor, Michigan 48106.

(1) ASTM D 3176–89, Standard Practice for Ultimate Analysis of Coal and Coke, IBR approved May 23, 1995 for § 76.15.

(2) ASTM D 3172–89, Standard Practice for Proximate Analysis of Coal and Coke, IBR approved May 23, 1995 for § 76.15.

(c) The following material is available for purchase from the American Society of Mechanical Engineers (ASME), 22 Law Drive, Box 2350, Fairfield, NJ 07007–2350.

(1) ASME Performance Test Code 4.2 (1991), Test Code for Coal Pulverizers, IBR approved May 23, 1995 for § 76.15.

(2) [Reserved]

(d) The following material is available for purchase from the American National Standards Institute, 11 West 42nd Street, New York, NY 10036 or from the International Organization

for Standardization (ISO), Case Postale 56, CH–1211 Geneve 20, Switzerland.

(1) ISO 9931 (December, 1991) ''Coal—Sampling of Pulverized Coal Conveyed by Gases in Direct Fired Coal Systems,'' IBR approved May 23, 1995 for § 76.15.

(2) [Reserved]

§ 76.5 NO_X emission limitations for Group 1 boilers.

(a) Beginning January 1, 1996, or for a unit subject to section 404(d) of the Act, the date on which the unit is required to meet Acid Rain emission reduction requirements for SO_2, the owner or operator of a Phase I coal-fired utility unit with a tangentially fired boiler or a dry bottom wall-fired boiler (other than units applying cell burner technology) shall not discharge, or allow to be discharged, emissions of NO_X to the atmosphere in excess of the following limits, except as provided in paragraphs (c) or (e) of this section or in § 76.10, 76.11, or 76.12:

(1) 0.45 lb/mmBtu of heat input on an annual average basis for tangentially fired boilers.

(2) 0.50 lb/mmBtu of heat input on an annual average basis for dry bottom wall-fired boilers (other than units applying cell burner technology).

(b) The owner or operator shall determine the annual average NO_X emission rate, in lb/mmBtu, using the methods and procedures specified in part 75 of this chapter.

(c) Unless the unit meets the early election requirement of § 76.8, the owner or operator of a coal-fired substitution unit with a tangentially fired boiler or a dry bottom wall-fired boiler (other than units applying cell burner technology) that satisfies the requirements of § 76.1(c)(2), shall comply with the NO_X emission limitations that apply to Group 1, Phase II boilers.

(d) The owner or operator of a Phase I unit with a cell burner boiler that converts to a conventional wall-fired boiler on or before January 1, 1995 or, for a unit subject to section 404(d) of the Act, the date the unit is required to meet Acid Rain emissions reduction requirements for SO_2 shall comply, by such respective date or January 1, 1996, whichever is later, with the NO_X emissions limitation applicable to dry bottom wall-fired boilers under paragraph (a) of this section, except as provided in paragraphs (c) or (e) of this section or in § 76.10, 76.11, or 76.12.

(e) The owner or operator of a Phase I unit with a Group 1 boiler that converts to a fluidized bed or other type of utility boiler not included in Group 1 boilers on or before January 1, 1995 or, for a unit subject to section 404(d) of the Act, the date the unit is required to meet Acid Rain emissions reduction requirements for SO_2 is exempt from the NO_X emissions limitations specified in paragraph (a) of this section, but shall comply with the NO_X emission limitations for Group 2 boilers under § 76.6.

(f) Except as provided in § 76.8 and in paragraph (c) of this section, each unit subject to the requirements of this section is not subject to the requirements of § 76.7.

[60 FR 18761, Apr. 13, 1995, as amended at 61 FR 67162, Dec. 19, 1996]

§ 76.6 NO_X emission limitations for Group 2 boilers.

(a) Beginning January 1, 2000 or, for a unit subject to section 409(b) of the Act, the date on which the unit is required to meet Acid Rain emission reduction requirements for SO_2, the owner or operator of a Group 2, coal-fired boiler with a cell burner boiler, cyclone boiler, a wet bottom boiler, or a vertically fired boiler shall not discharge, or allow to be discharged, emissions of NO_X to the atmosphere in excess of the following limits, except as provided in §§ 76.10 or 76.11:

(1) 0.68 lb/mmBtu of heat input on an annual average basis for cell burner boilers. The NO_X emission control technology on which the emission limitation is based is plug-in combustion controls or non-plug-in combustion controls. Except as provided in § 76.5(d), the owner or operator of a unit with a cell burner boiler that installs non-plug-in combustion controls after November 15, 1990 shall comply with the emission limitation applicable to cell burner boilers. The owner or operator of a unit with a cell burner that installs non-plug-in combustion controls on or before November 15, 1990 shall comply with the applicable emission

limitation for dry bottom wall-fired boilers.

(2) 0.86 lb/mmBtu of heat input on an annual average basis for cyclone boilers with a Maximum Continuous Steam Flow at 100% of Load of greater than 1060, in thousands of lb/hr. The NO_X emission control technology on which the emission limitation is based is natural gas reburning or selective catalytic reduction.

(3) 0.84 lb/mmBtu of heat input on an annual average basis for wet bottom boilers, with a Maximum Continuous Steam Flow at 100% of Load of greater than 450, in thousands of lb/hr. The NO_X emission control technology on which the emission limitation is based is natural gas reburning or selective catalytic reduction.

(4) 0.80 lb/mmBtu of heat input on an annual average basis for vertically fired boilers. The NO_X emission control technology on which the emission limitation is based is combustion controls.

(b) The owner or operator shall determine the annual average NO_X emission rate, in lb/mmBtu, using the methods and procedures specified in part 75 of this chapter.

[62 FR 67162, Dec. 19, 1996; 62 FR 3464, Jan. 23, 1997; 62 FR 32040, June 12, 1997]

§76.7 Revised NO_X emission limitations for Group 1, Phase II boilers.

(a) Beginning January 1, 2000, the owner or operator of a Group 1, Phase II coal-fired utility unit with a tangentially fired boiler or a dry bottom wall-fired boiler shall not discharge, or allow to be discharged, emissions of NO_X to the atmosphere in excess of the following limits, except as provided in §§76.8, 76.10, or 76.11:

(1) 0.40 lb/mmBtu of heat input on an annual average basis for tangentially fired boilers.

(2) 0.46 lb/ mmBtu of heat input on an annual average basis for dry bottom wall-fired boilers (other than units applying cell burner technology).

(b) The owner or operator shall determine the annual average NO_X emission rate, in lb/mmBtu, using the methods and procedures specified in part 75 of this chapter.

[60 FR 18761, Apr. 13, 1995, as amended at 61 FR 67163, Dec. 19, 1996]

§76.8 Early election for Group 1, Phase II boilers.

(a) *General provisions.* (1) The owner or operator of a Phase II coal-fired utility unit with a Group 1 boiler may elect to have the unit become subject to the applicable emissions limitation for NO_X under §76.5, starting no later than January 1, 1997.

(2) The owner or operator of a Phase II coal-fired utility unit with a Group 1 boiler that elects to become subject to the applicable emission limitation under §76.5 shall not be subject to §76.7 until January 1, 2008, provided the designated representative demonstrates that the unit is in compliance with the limitation under §76.5, using the methods and procedures specified in part 75 of this chapter, for the period beginning January 1 of the year in which the early election takes effect (but not later than January 1, 1997) and ending December 31, 2007.

(3) The owner or operator of any Phase II unit with a cell burner boiler that converts to conventional burner technology may elect to become subject to the applicable emissions limitation under §76.5 for dry bottom wall-fired boilers, provided the owner or operator complies with the provisions in paragraph (a)(2) of this section.

(4) The owner or operator of a Phase II unit approved for early election shall not submit an application for an alternative emissions limitation demonstration period under §76.10 until the earlier of:

(i) January 1, 2008; or

(ii) Early election is terminated pursuant to paragraph (e)(3) of this section.

(5) The owner or operator of a Phase II unit approved for early election may not incorporate the unit into an averaging plan prior to January 1, 2000. On or after January 1, 2000, for purposes of the averaging plan, the early election unit will be treated as subject to the applicable emissions limitation for NO_X for Phase II units with Group 1 boilers under §76.7.

(b) *Submission requirements.* In order to obtain early election status, the designated representative of a Phase II unit with a Group 1 boiler shall submit an early election plan to the Administrator by January 1 of the year the

early election is to take effect, but not later than January 1, 1997. Notwithstanding § 72.40 of this chapter, and unless the unit is a substitution unit under § 72.41 of this chapter or a compensating unit under § 72.43 of this chapter, a complete compliance plan covering the unit shall not include the provisions for SO_2 emissions under § 72.40(a)(1) of this chapter.

(c) *Contents of an early election plan.* A complete early election plan shall include the following elements in a format prescribed by the Administrator:

(1) A request for early election;

(2) The first year for which early election is to take effect, but not later than 1997; and

(3) The special provisions under paragraph (e) of this section.

(d)(1) *Permitting authority's action.* To the extent the Administrator determines that an early election plan complies with the requirements of this section, the Administrator will approve the plan and:

(i) If a Phase I Acid Rain permit governing the source at which the unit is located has been issued, will revise the permit in accordance with the permit modification procedures in § 72.81 of this chapter to include the early election plan; or

(ii) If a Phase I Acid Rain permit governing the source at which the unit is located has not been issued, will issue a Phase I Acid Rain permit effective from January 1, 1995 through December 31, 1999, that will include the early election plan and a complete compliance plan under § 72.40(a) of this chapter and paragraph (b) of this section. If the early election plan is not effective until after January 1, 1995, the permit will not contain any NO_X emissions limitations until the effective date of the plan.

(2) Beginning January 1, 2000, the permitting authority will approve any early election plan previously approved by the Administrator during Phase I, unless the plan is terminated pursuant to paragraph (e)(3) of this section.

(e) *Special provisions*—(1) *Emissions limitations*—(i) *Sulfur dioxide.* Notwithstanding § 72.9 of this chapter, a unit that is governed by an approved early election plan and that is not a substitution unit under § 72.41 of this chapter or a compensating unit under § 72.43 of this chapter shall not be subject to the following standard requirements under § 72.9 of this chapter for Phase I:

(A) The permit requirements under §§ 72.9(a)(1) (i) and (ii) of this chapter;

(B) The sulfur dioxide requirements under § 72.9(c) of this chapter; and

(C) The excess emissions requirements under § 72.9(e)(1) of this chapter.

(ii) *Nitrogen oxides.* A unit that is governed by an approved early election plan shall be subject to an emissions limitation for NO_X as provided under paragraph (a)(2) of this section except as provided under paragraph (e)(3)(iii) of this section.

(2) *Liability.* The owners and operators of any unit governed by an approved early election plan shall be liable for any violation of the plan or this section at that unit. The owners and operators shall be liable, beginning January 1, 2000, for fulfilling the obligations specified in part 77 of this chapter.

(3) *Termination.* An approved early election plan shall be in effect only until the earlier of January 1, 2008 or January 1 of the calendar year for which a termination of the plan takes effect.

(i) If the designated representative of the unit under an approved early election plan fails to demonstrate compliance with the applicable emissions limitation under § 76.5 for any year during the period beginning January 1 of the first year the early election takes effect and ending December 31, 2007, the permitting authority will terminate the plan. The termination will take effect beginning January 1 of the year after the year for which there is a failure to demonstrate compliance, and the designated representative may not submit a new early election plan.

(ii) The designated representative of the unit under an approved early election plan may terminate the plan any year prior to 2008 but may not submit a new early election plan. In order to terminate the plan, the designated representative must submit a notice under § 72.40(d) of this chapter by January 1 of the year for which the termination is to take effect.

(iii)(A) If an early election plan is terminated any year prior to 2000, the

unit shall meet, beginning January 1, 2000, the applicable emissions limitation for NO_X for Phase II units with Group 1 boilers under §76.7.

(B) If an early election plan is terminated in or after 2000, the unit shall meet, beginning on the effective date of the termination, the applicable emissions limitation for NO_X for Phase II units with Group 1 boilers under §76.7.

[60 FR 18761, Apr. 13, 1995, as amended at 61 FR 67163, Dec. 19, 1996]

§76.9 Permit application and compliance plans.

(a) *Duty to apply.* (1) The designated representative of any source with an affected unit subject to this part shall submit, by the applicable deadline under paragraph (b) of this section, a complete Acid Rain permit application (or, if the unit is covered by an Acid Rain permit, a complete permit revision) that includes a complete compliance plan for NO_X emissions covering the unit.

(2) The original and three copies of the permit application and compliance plan for NO_X emissions for Phase I shall be submitted to the EPA regional office for the region where the applicable source is located. The original and three copies of the permit application and compliance plan for NO_X emissions for Phase II shall be submitted to the permitting authority.

(b) *Deadlines.* (1) For a Phase I unit with a Group 1 boiler, the designated representative shall submit a complete permit application and compliance plan for NO_X covering the unit during Phase I to the applicable permitting authority not later than May 6, 1994.

(2) For a Phase I or Phase II unit with a Group 2 boiler or a Phase II unit with a Group 1 boiler, the designated representative shall submit a complete permit application and compliance plan for NO_X emissions covering the unit in Phase II to the Administrator not later than January 1, 1998, except that early election units shall also submit an application not later than January 1, 1997.

(c) *Information requirements for NO_X compliance plans.* (1) In accordance with §72.40(a)(2) of this chapter, a complete compliance plan for NO_X shall, for each affected unit included in the permit application and subject to this part, either certify that the unit will comply with the applicable emissions limitation under §76.5, 76.6, or 76.7 or specify one or more other Acid Rain compliance options for NO_X in accordance with the requirements of this part. A complete compliance plan for NO_X for a source shall include the following elements in a format prescribed by the Administrator:

(i) Identification of the source;

(ii) Identification of each affected unit that is at the source and is subject to this part;

(iii) Identification of the boiler type of each unit;

(iv) Identification of the compliance option proposed for each unit (i.e., meeting the applicable emissions limitation under §76.5, 76.6, 76.7, 76.8 (early election), 76.10 (alternative emission limitation), 76.11 (NO_X emissions averaging), or 76.12 (Phase I NO_X compliance extension)) and any additional information required for the appropriate option in accordance with this part;

(v) Reference to the standard requirements in §72.9 of this chapter (consistent with §76.8(e)(1)(i)); and

(vi) The requirements of §§72.21 (a) and (b) of this chapter.

(d) *Duty to reapply.* The designated representative of any source with an affected unit subject to this part shall submit a complete Acid Rain permit application, including a complete compliance plan for NO_X emissions covering the unit, in accordance with the deadlines in §72.30(c) of this chapter.

§76.10 Alternative emission limitations.

(a) *General provisions.* (1) The designated representative of an affected unit that is not an early election unit pursuant to §76.8 and cannot meet the applicable emission limitation in §76.5, 76.6, or 76.7 using, for Group 1 boilers, either low NO_X burner technology or an alternative technology in accordance with paragraph (e)(11) of this section, or, for tangentially fired boilers, separated overfire air, or, for Group 2 boilers, the technology on which the applicable emission limitation is based may petition the permitting authority for

an alternative emission limitation less stringent than the applicable emission limitation.

(2) In order for the unit to qualify for an alternative emission limitation, the designated representative shall demonstrate that the affected unit cannot meet the applicable emission limitation in § 76.5, 76.6, or 76.7 based on a showing, to the satisfaction of the Administrator, that:

(i)(A) For a tangentially fired boiler, the owner or operator has either properly installed low NO_X burner technology or properly installed separated overfire air; or

(B) For a dry bottom wall-fired boiler (other than a unit applying cell burner technology), the owner or operator has properly installed low NO_X burner technology; or

(C) For a Group 1 boiler, the owner or operator has properly installed an alternative technology (including but not limited to reburning, selective noncatalytic reduction, or selective catalytic reduction) that achieves NO_X emission reductions demonstrated in accordance with paragraph (e)(11) of this section; or

(D) For a Group 2 boiler, the owner or operator has properly installed the appropriate NO_X emission control technology on which the applicable emission limitation in § 76.6 is based; and

(ii) The installed NO_X emission control system has been designed to meet the applicable emission limitation in § 76.5, 76.6, or 76.7; and

(iii) For a demonstration period of at least 15 months or other period of time, as provided in paragraph (f)(1) of this section:

(A) The NO_X emission control system has been properly installed and properly operated according to specifications and procedures designed to minimize the emissions of NO_X to the atmosphere;

(B) Unit operating data as specified in this section show that the unit and NO_X emission control system were operated in accordance with the bid and design specifications on which the design of the NO_X emission control system was based; and

(C) Unit operating data as specified in this section, continuous emission monitoring data obtained pursuant to part 75 of this chapter, and the test data specific to the NO_X emission control system show that the unit could not meet the applicable emission limitation in § 76.5, 76.6, or 76.7.

(b) *Petitioning process.* The petitioning process for an alternative emission limitation shall consist of the following steps:

(1) Operation during a period of at least 3 months, following the installation of the NO_X emission control system, that shows that the specific unit and the NO_X emission control system was unable to meet the applicable emissions limitation under § 76.5, 76.6, or 76.7 and was operated in accordance with the operating conditions upon which the design of the NO_X emission control system was based and with vendor specifications and procedures;

(2) Submission of a petition for an alternative emission limitation demonstration period as specified in paragraph (d) of this section;

(3) Operation during a demonstration period of at least 15 months, or other period of time as provided in paragraph (f)(1) of this section, that demonstrates the inability of the specific unit to meet the applicable emissions limitation under § 76.5, 76.6, or 76.7 and the minimum NO_X emissions rate that the specific unit can achieve during long-term load dispatch operation; and

(4) Submission of a petition for a final alternative emission limitation as specified in paragraph (e) of this section.

(c) *Deadlines*—(1) *Petition for an alternative emission limitation demonstration period.* The designated representative of the unit shall submit a petition for an alternative emission limitation demonstration period to the permitting authority after the unit has been operated for at least 3 months after installation of the NO_X emission control system required under paragraph (a)(2) of this section and by the following deadline:

(i) For units that seek to have an alternative emission limitation demonstration period apply during all or part of calendar year 1996, or any previous calendar year by the later of:

(A) 120 days after startup of the NO_X emission control system, or

(B) May 1, 1996.

(ii) For units that seek an alternative emission limitation demonstration period beginning in a calendar year after 1996, not later than:

(A) 120 days after January 1 of that calendar year, or

(B) 120 days after startup of the NO_X emission control system if the unit is not operating at the beginning of that calendar year.

(2) *Petition for a final alternative emission limitation.* Not later than 90 days after the end of an approved alternative emission limitation demonstration period for the unit, the designated representative of the unit may submit a petition for an alternative emission limitation to the permitting authority.

(3) *Renewal of an alternative emission limitation.* In order to request continuation of an alternative emission limitation, the designated representative must submit a petition to renew the alternative emission limitation on the date that the application for renewal of the source's Acid Rain permit containing the alternative emission limitation is due.

(d) *Contents of petition for an alternative emission limitation demonstration period.* The designated representative of an affected unit that has met the minimum criteria under paragraph (a) of this section and that has been operated for a period of at least 3 months following the installation of the required NO_X emission control system may submit to the permitting authority a petition for an alternative emission limitation demonstration period. In the petition, the designated representative shall provide the following information in a format prescribed by the Administrator:

(1) Identification of the unit;

(2) The type of NO_X control technology installed (e.g., low NO_X burner technology, selective noncatalytic reduction, selective catalytic reduction, reburning);

(3) If an alternative technology is installed, the time period (not less than 6 consecutive months) prior to installation of the technology to be used for the demonstration required in paragraph (e)(11) of this section.

(4) Documentation as set forth in § 76.14(a)(1) showing that the installed NO_X emission control system has been designed to meet the applicable emission limitation in § 76.5, 76.6, or 76.7 and that the system has been properly installed according to procedures and specifications designed to minimize the emissions of NO_X to the atmosphere;

(5) The date the unit commenced operation following the installation of the NO_X emission control system or the date the specific unit became subject to the emission limitations of § 76.5, 76.6, or 76.7, whichever is later;

(6) The dates of the operating period (which must be at least 3 months long);

(7) Certification by the designated representative that the owner(s) or operator operated the unit and the NO_X emission control system during the operating period in accordance with: Specifications and procedures designed to achieve the maximum NO_X reduction possible with the installed NO_X emission control system or the applicable emission limitation in § 76.5, 76.6, or 76.7; the operating conditions upon which the design of the NO_X emission control system was based; and vendor specifications and procedures;

(8) A brief statement describing the reason or reasons why the unit cannot achieve the applicable emission limitation in § 76.5, 76.6, or 76.7;

(9) A demonstration period plan, as set forth in § 76.14(a)(2);

(10) Unit operating data and quality-assured continuous emission monitoring data (including the specific data items listed in § 76.14(a)(3) collected in accordance with part 75 of this chapter during the operating period) and demonstrating the inability of the specific unit to meet the applicable emission limitation in § 76.5, 76.6, or 76.7 on an annual average basis while operating as certified under paragraph (d)(7) of this section;

(11) An interim alternative emission limitation, in lb/mmBtu, that the unit can achieve during a demonstration period of at least 15 months. The interim alternative emission limitation shall be derived from the data specified in paragraph (d)(10) of this section using methods and procedures satisfactory to the Administrator;

(12) The proposed dates of the demonstration period (which must be at least 15 months long);

(13) A report which outlines the testing and procedures to be taken during the demonstration period in order to determine the maximum NO_X emission reduction obtainable with the installed system. The report shall include the reasons for the NO_X emission control system's failure to meet the applicable emission limitation, and the tests and procedures that will be followed to optimize the NO_X emission control system's performance. Such tests and procedures may include those identified in § 76.15 as appropriate.

(14) The special provisions at paragraph (g)(1) of this section.

(e) *Contents of petition for a final alternative emission limitation.* After the approved demonstration period, the designated representative of the unit may petition the permitting authority for an alternative emission limitation. The petition shall include the following elements in a format prescribed by the Administrator:

(1) Identification of the unit;

(2) Certification that the owner(s) or operator operated the affected unit and the NO_X emission control system during the demonstration period in accordance with: specifications and procedures designed to achieve the maximum NO_X reduction possible with the installed NO_X emission control system or the applicable emissions limitation in § 76.5, 76.6, or 76.7; the operating conditions (including load dispatch conditions) upon which the design of the NO_X emission control system was based; and vendor specifications and procedures.

(3) Certification that the owner(s) or operator have installed in the affected unit all NO_X emission control systems, made any operational modifications, and completed any planned upgrades and/or maintenance to equipment specified in the approved demonstration period plan for optimizing NO_X emission reduction performance, consistent with the demonstration period plan and the proper operation of the installed NO_X emission control system. Such certification shall explain any differences between the installed NO_X emission control system and the equipment configuration described in the approved demonstration period plan.

(4) A clear description of each step or modification taken during the demonstration period to improve or optimize the performance of the installed NO_X emission control system.

(5) Engineering design calculations and drawings that show the technical specifications for installation of any additional operational or emission control modifications installed during the demonstration period.

(6) Unit operating and quality-assured continuous emission monitoring data (including the specific data listed in § 76.14(b)) collected in accordance with part 75 of this chapter during the demonstration period and demonstrating the inability of the specific unit to meet the applicable emission limitation in § 76.5, 76.6, or 76.7 on an annual average basis while operating in accordance with the certification under paragraph (e)(2) of this section.

(7) A report (based on the parametric test requirements set forth in the approved demonstration period plan as identified in paragraph (d)(13) of this section), that demonstrates the unit was operated in accordance with the operating conditions upon which the design of the NO_X emission control system was based and describes the reason or reasons for the failure of the installed NO_X emission control system to meet the applicable emission limitation in § 76.5, 76.6, or 76.7 on an annual average basis.

(8) The minimum NO_X emission rate, in lb/mmBtu, that the affected unit can achieve on an annual average basis with the installed NO_X emission control system. This value, which shall be the requested alternative emission limitation, shall be derived from the data specified in this section using methods and procedures satisfactory to the Administrator and shall be the lowest annual emission rate the unit can achieve with the installed NO_X emission control system;

(9) All supporting data and calculations documenting the determination of the requested alternative emission limitation and its conformance with the methods and procedures satisfactory to the Administrator;

(10) The special provisions in paragraph (g)(2) of this section.

(11) In addition to the other requirements of this section, the owner or operator of an affected unit with a Group 1 boiler that has installed an alternative technology in addition to or in lieu of low NO_X burner technology and cannot meet the applicable emission limitation in § 76.5 shall demonstrate, to the satisfaction of the Administrator, that the actual percentage reduction in NO_X emissions (lbs/mmBtu), on an annual average basis is greater than 65 percent of the average annual NO_X emissions prior to the installation of the NO_X emission control system. The percentage reduction in NO_X emissions shall be determined using continuous emissions monitoring data for NO_X taken during the time period (under paragraph (d)(3) of this section) prior to the installation of the NO_X emission control system and during long-term load dispatch operation of the specific boiler.

(f) *Permitting authority's action*—(1) *Alternative emission limitation demonstration period.* (i) The permitting authority may approve an alternative emission limitation demonstration period and demonstration period plan, provided that the requirements of this section are met to the satisfaction of the permitting authority. The permitting authority shall disapprove a demonstration period if the requirements of paragraph (a) of this section were not met during the operating period.

(ii) If the demonstration period is approved, the permitting authority will include, as part of the demonstration period, the 4 month period prior to submission of the application in the demonstration period.

(iii) The alternative emission limitation demonstration period will authorize the unit to emit at a rate not greater than the interim alternative emission limitation during the demonstration period on or after January 1, 1996 for Phase I units and the applicable date established in § 76.6 or 76.7 for Phase II units, and until the date that the Administrator approves or denies a final alternative emission limitation.

(iv) After an alternative emission limitation demonstration period is approved, if the designated representative requests an extension of the demonstration period in accordance with paragraph (g)(1)(i)(B) of this section, the permitting authority may extend the demonstration period by administrative amendment (under § 72.83 of this chapter) to the Acid Rain permit.

(v) The permitting authority shall deny the demonstration period if the designated representative cannot demonstrate that the unit met the requirements of paragraph (a)(2) of this section. In such cases, the permitting authority shall require that the owner or operator operate the unit in compliance with the applicable emission limitation in § 76.5, 76.6, or 76.7 for the period preceding the submission of the application for an alternative emission limitation demonstration period, including the operating period, if such periods are after the date on which the unit is subject to the standard limit under § 76.5, 76.6, or 76.7.

(2) *Alternative emission limitation.* (i) If the permitting authority determines that the requirements in this section are met, the permitting authority will approve an alternative emission limitation and issue or revise an Acid Rain permit to apply the approved limitation, in accordance with subparts F and G of part 72 of this chapter. The permit will authorize the unit to emit at a rate not greater than the approved alternative emission limitation, starting the date the permitting authority revises an Acid Rain permit to approve an alternative emission limitation.

(ii) If a permitting authority disapproves an alternative emission limitation under paragraph (a)(2) of this section, the owner or operator shall operate the affected unit in compliance with the applicable emission limitation in § 76.5, 76.6, or 76.7 (unless the unit is participating in an approved averaging plan under § 76.11) beginning on the date the permitting authority revises an Acid Rain permit to disapprove an alternative emission limitation.

(3) *Alternative emission limitation renewal.* (i) If, upon review of a petition to renew an approved alternative emission limitation, the permitting authority determines that no changes have been made to the control technology, its operation, the operating conditions on which the alternative emission limitation was based, or the actual NO_X

emission rate, the alternative emission limitation will be renewed.

(ii) If the permitting authority determines that changes have been made to the control technology, its operation, the fuel quality, or the operating conditions on which the alternative emission limitation was based, the designated representative shall submit, in order to renew the alternative emission limitation or to obtain a new alternative emission limitation, a petition for an alternative emission limitation demonstration period that meets the requirements of paragraph (d) of this section using a new demonstration period.

(g) *Special provisions*—(1) *Alternative emission limitation demonstration period*—(i) *Emission limitations.* (A) Each unit with an approved alternative emission limitation demonstration period shall comply with the interim emission limitation specified in the unit's permit beginning on the effective date of the demonstration period specified in the permit and, if a timely petition for a final alternative emission limitation is submitted, extending until the date on which the permitting authority issues or revises an Acid Rain permit to approve or disapprove an alternative emission limitation. If a timely petition is not submitted, then the unit shall comply with the standard emission limit under § 76.5, 76.6, or 76.7 beginning on the date the petition was required to be submitted under paragraph (c)(2) of this section.

(B) When the owner or operator identifies, during the demonstration period, boiler operating or NO_X emission control system modifications or upgrades that would produce further NO_X emission reductions, enabling the affected unit to comply with or bring its emission rate closer to the applicable emissions limitation under § 76.5, 76.6, or 76.7, the designated representative may submit a request and the permitting authority may grant, by administrative amendment under § 72.83 of this chapter, an extension of the demonstration period for such period of time (not to exceed 12 months) as may be necessary to implement such modifications or upgrades.

(C) If the approved interim alternative emission limitation applies to a unit for part, but not all, of a calendar year, the unit shall determine compliance for the calendar year in accordance with the procedures in § 76.13(a).

(ii) *Operating requirements.* (A) A unit with an approved alternative emission limitation demonstration period shall be operated under load dispatch conditions consistent with the operating conditions upon which the design of the NO_X emission control system and performance guarantee were based, and in accordance with the demonstration period plan.

(B) A unit with an approved alternative emission limitation demonstration period shall install all NO_X emission control systems, make any operational modifications, and complete any upgrades and maintenance to equipment specified in the approved demonstration period plan for optimizing NO_X emission reduction performance.

(C) When the owner or operator identifies boiler or NO_X emission control system operating modifications that would produce higher NO_X emission reductions, enabling the affected unit to comply with, or bring its emission rate closer to, the applicable emission limitation under § 76.5, 76.6, or 76.7, the designated representative shall submit an administrative amendment under § 72.83 of this chapter to revise the unit's Acid Rain permit and demonstration period plan to include such modifications.

(iii) *Testing requirements.* A unit with an approved alternative emission limitation demonstration period shall monitor in accordance with part 75 of this chapter and shall conduct all tests required under the approved demonstration period plan.

(2) *Final alternative emission limitation*—(i) *Emission limitations.* (A) Each unit with an approved alternative emission limitation shall comply with the alternative emission limitation specified in the unit's permit beginning on the date specified in the permit as issued or revised by the permitting authority to apply the final alternative emission limitation.

(B) If the approved interim or final alternative emission limitation applies to a unit for part, but not all, of a calendar year, the unit shall determine

compliance for the calendar year in accordance with the procedures in §76.13(a).

[60 FR 18761, Apr. 13, 1995, as amended at 61 FR 67163, Dec. 19, 1996]

§76.11 Emissions averaging.

(a) *General provisions.* In lieu of complying with the applicable emission limitation in §76.5, 76.6, or 76.7, any affected units subject to such emission limitation, under control of the same owner or operator, and having the same designated representative may average their NO_X emissions under an averaging plan approved under this section.

(1) Each affected unit included in an averaging plan for Phase I shall be a Phase I unit with a Group 1 boiler subject to an emission limitation in §76.5 during all years for which the unit is included in the plan.

(i) If a unit with an approved NO_X compliance extension is included in an averaging plan for 1996, the unit shall be treated, for the purposes of applying Equation 1 in paragraph (a)(6) of this section and Equation 2 in paragraph (d)(1)(ii)(A) of this section, as subject to the applicable emissions limitation under §76.5 for the entire year 1996.

(ii) A Phase II unit approved for early election under §76.8 shall not be included in an averaging plan for Phase I.

(2) Each affected unit included in an averaging plan for Phase II shall be a boiler subject to an emission limitation in §76.5, 76.6, or 76.7 for all years for which the unit is included in the plan.

(3) Each unit included in an averaging plan shall have an alternative contemporaneous annual emission limitation (lb/mmBtu) and can only be included in one averaging plan.

(4) Each unit included in an averaging plan shall have a minimum allowable annual heat input value (mmBtu), if it has an alternative contemporaneous annual emission limitation more stringent than that unit's applicable emission limitation under §76.5, 76.6, or 76.7, and a maximum allowable annual heat input value, if it has an alternative contemporaneous annual emission limitation less stringent than that unit's applicable emission limitation under §76.5, 76.6, or 76.7.

(5) The Btu-weighted annual average emission rate for the units in an averaging plan shall be less than or equal to the Btu-weighted annual average emission rate for the same units had they each been operated, during the same period of time, in compliance with the applicable emission limitations in §76.5, 76.6, or 76.7.

(6) In order to demonstrate that the proposed plan is consistent with paragraph (a)(5) of this section, the alternative contemporaneous annual emission limitations and annual heat input values assigned to the units in the proposed averaging plan shall meet the following requirement:

$$\frac{\sum_{i=1}^{n}\left(R_{Li} \times HI_i\right)}{\sum_{i=1}^{n} HI_i} \leq \frac{\sum_{i=1}^{n}\left(R_{li} \times HI_i\right)}{\sum_{i=1}^{n} HI_i} \qquad \text{(Equation 1)}$$

Where:

R_{Li} = Alternative contemporaneous annual emission limitation for unit i, lb/mmBtu, as specified in the averaging plan;

R_{li} = Applicable emission limitation for unit i, lb/mmBtu, as specified in §76.5, 76.6, or 76.7 except that for early election units, which may be included in an averaging plan only on or after January 1, 2000, R_{li} shall equal the most stringent applicable emission limitation under §76.5 or 76.7;

HI_i = Annual heat input for unit i, mmBtu, as specified in the averaging plan;

n = Number of units in the averaging plan.

(7) For units with an alternative emission limitation, R_{li} shall equal the applicable emissions limitation under § 76.5, 76.6, or 76.7, not the alternative emissions limitation.

(8) No unit may be included in more than one averaging plan.

(b)(1) *Submission requirements.* The designated representative of a unit meeting the requirements of paragraphs (a)(1), (a)(2), and (a)(8) of this section may submit an averaging plan (or a revision to an approved averaging plan) to the permitting authority(ies) at any time up to and including January 1 (or July 1, if the plan is restricted to units located within a single permitting authority's jurisdiction) of the calendar year for which the averaging plan is to become effective.

(2) The designated representative shall submit a copy of the same averaging plan (or the same revision to an approved averaging plan) to each permitting authority with jurisdiction over a unit in the plan.

(3) When an averaging plan (or a revision to an approved averaging plan) is not approved, the owner or operator of each unit in the plan shall operate the unit in compliance with the emission limitation that would apply in the absence of the averaging plan (or revision to a plan).

(c) *Contents of NO_X averaging plan.* A complete NO_X averaging plan shall include the following elements in a format prescribed by the Administrator:

(1) Identification of each unit in the plan;

(2) Each unit's applicable emission limitation in § 76.5, 76.6, or 76.7;

(3) The alternative contemporaneous annual emission limitation for each unit (in lb/mmBtu). If any of the units identified in the NO_X averaging plan utilize a common stack pursuant to § 75.17(a)(2)(i)(B) of this chapter, the same alternative contemporaneous emission limitation shall be assigned to each such unit and different heat input limits may be assigned;

(4) The annual heat input limit for each unit (in mmBtu);

(5) The calculation for Equation 1 in paragraph (a)(6) of this section;

(6) The calendar years for which the plan will be in effect; and

(7) The special provisions in paragraph (d)(1) of this section.

(d) *Special provisions.*— (1) *Emission limitations.* Each affected unit in an approved averaging plan is in compliance with the Acid Rain emission limitation for NO_X under the plan only if the following requirements are met:

(i) For each unit, the unit's actual annual average emission rate for the calendar year, in lb/mmBtu, is less than or equal to its alternative contemporaneous annual emission limitation in the averaging plan; and

(A) For each unit with an alternative contemporaneous emission limitation less stringent than the applicable emission limitation in § 76.5, 76.6, or 76.7, the actual annual heat input for the calendar year does not exceed the annual heat input limit in the averaging plan;

(B) For each unit with an alternative contemporaneous annual emission limitation more stringent than the applicable emission limitation in § 76.5, 76.6, or 76.7, the actual annual heat input for thecalendar year is not less than the annual heat input limit in the averaging plan; or

(ii) If one or more of the units does not meet the requirements under paragraph (d)(1)(i) of this section, the designated representative shall demonstrate, in accordance with paragraph (d)(1)(ii)(A) of this section (Equation 2) that the actual Btu-weighted annual average emission rate for the units in the plan is less than or equal to the Btu-weighted annual average rate for the same units had they each been operated, during the same period of time, in compliance with the applicable emission limitations in § 76.5, 76.6, or 76.7.

(A) A group showing of compliance shall be made based on the following equation:

$$\frac{\sum_{i=1}^{n}\left(R_{ai} \times HI_{ai}\right)}{\sum_{i=1}^{n} HI_{ai}} \leq \frac{\sum_{i=1}^{n}\left(R_{li} \times HI_{ai}\right)}{\sum_{i=1}^{n} HI_{ai}} \qquad \text{(Equation 2)}$$

Where:

R_{ai} = Actual annual average emission rate for unit i, lb/mmBtu, as determined using the procedures in part 75 of this chapter. For units in an averaging plan utilizing a common stack pursuant to § 75.17(a)(2)(i)(B) of this chapter, use the same NO_X emission rate value for each unit utilizing the common stack, and calculate this value in accordance with appendix F to part 75 of this chapter;

R_{li} = Applicable annual emission limitation for unit i lb/mmBtu, as specified in § 76.5, 76.6, or 76.7, except that for early election units, which may be included in an averaging plan only on or after January 1, 2000, R_{li} shall equal the most stringent applicable emission limitation under § 76.5 or 76.7;

HI_{ai} = Actual annual heat input for unit i, mmBtu, as determined using the procedures in part 75 of this chapter;

n = Number of units in the averaging plan.

(B) For units with an alternative emission limitation, R_{li} shall equal the applicable emission limitation under § 76.5, 76.6, or 76.7, not the alternative emission limitation.

(C) If there is a successful group showing of compliance under paragraph (d)(1)(ii)(A) of this section for a calendar year, then all units in the averaging plan shall be deemed to be in compliance for that year with their alternative contemporaneous emission limitations and annual heat input limits under paragraph (d)(1)(i) of this section.

(2) *Liability*. The owners and operators of a unit governed by an approved averaging plan shall be liable for any violation of the plan or this section at that unit or any other unit in the plan, including liability for fulfilling the obligations specified in part 77 of this chapter and sections 113 and 411 of the Act.

(3) *Withdrawal or termination*. The designated representative may submit a notification to terminate an approved averaging plan in accordance with § 72.40(d) of this chapter, no later than October 1 of the calendar year for which the plan is to be withdrawn or terminated.

§ 76.12 Phase I NO_X compliance extension.

(a) *General provisions*. (1) The designated representative of a Phase I unit with a Group 1 boiler may apply for and receive a 15-month extension of the deadline for meeting the applicable emissions limitation under § 76.5 where it is demonstrated, to the satisfaction of the Administrator, that:

(i) The low NO_X burner technology designed to meet the applicable emission limitation is not in adequate supply to enable installation and operation at the unit, consistent with system reliability, by January 1, 1995 and the reliability problems are due substantially to NO_X emission control system installation and availability; or

(ii) The unit is participating in an approved clean coal technology demonstration project.

(2) In order to obtain a Phase I NO_X compliance extension, the designated representative shall submit a Phase I NO_X compliance extension plan by October 1, 1994.

(b) *Contents of Phase I NO_X compliance extension plan*. A complete Phase I NO_X compliance extension plan shall include the following elements in a format prescribed by the Administrator:

(1) Identification of the unit.

(2) For units applying pursuant to paragraph (a)(1)(i) of this section:

(i) A list of the company names, addresses, and telephone numbers of vendors who are qualified to provide the

services and low NO_X burner technology designed to meet the applicable emission limitation under § 76.5 and have been contacted to obtain the required services and technology. The list shall include the dates of contact, and a copy of each request for bids shall be submitted, along with any other information necessary to show a good-faith effort to obtain the required services and technology necessary to meet the requirements of this part on or before January 1, 1995.

(ii) A copy of those portions of a legally binding contract with a qualified vendor that demonstrate that services and low NO_X burner technology designed to meet the applicable emission limitation under § 76.5, with a completion date not later than December 31, 1995 have been contracted for.

(iii) Scheduling information, including justification and test schedules.

(iv) To demonstrate, if applicable, that the supply of the low NO_X burner technology designed to meet the applicable emission limitation under § 76.5 is inadequate to enable its installation and operation at the unit, consistent with system reliability, in time for the unit to comply with the applicable emission limitation on or before January 1, 1995, either:

(A) Certification from the selected vendor(s) (by a certifying official) listed in paragraph (b)(2)(i) of this section stating that they cannot provide the necessary services and install the low NO_X burner technology on or before January 1, 1995 and explaining the reasons why the services cannot be provided and why the equipment cannot be installed in a timely manner; or

(B) The following information:

(i) Standard load forecasts, based on standard forecasting models available throughout the utility industry and applied to the period, January 1, 1993, through December 31, 1994.

(ii) Specific reasons why an outage cannot be scheduled to enable the unit to install and operate the low NO_X burner technology by January 1, 1995, including reasons why no other units can be used to replace this unit's generation during such outage.

(iii) Fuel and energy balance summaries and power and other consumption requirements (including those for air, steam, and cooling water).

(3) To demonstrate, if applicable, participation in an approved clean coal technology demonstration project, a description of the project, including all sources of federal, State, and other outside funding, amount and date for approval of federal funding, the duration of the project, and the anticipated completion date of the project.

(4) The special provisions in paragraph (d) of this section.

(c)(1) *Administrator's action.* To the extent the Administrator determines that a Phase I NO_X compliance extension plan complies with the requirements of this section, the Administrator will approve the plan and revise the Acid Rain permit governing the unit in the plan in order to incorporate the plan by administrative amendment under § 72.83 of this chapter, except that the Administrator shall have 90 days from receipt of the compliance extension plan to take final action.

(2) The Administrator will approve or disapprove a proposed NO_X compliance extension plan within 3 months of receipt.

(d) *Special provisions.* (1) Emission limitations. The unit shall comply with the applicable emission limitation under § 76.5 beginning April 1, 1996. Compliance shall be determined as specified in part 75 of this chapter using measured values of NO_X emissions and heat input only for the portion of the year that the emission limit is in effect.

(2) If a unit with an approved NO_X compliance extension is included in an averaging plan under § 76.11 for year 1996, the unit shall be treated, for purposes of applying Equation 1 in § 76.11(a)(6) and Equation 2 in § 76.11(d)(1)(ii)(A), as subject to the applicable emission limitation under § 76.5 for the entire year 1996.

(e) *Extension until December 31, 1997.* (1) The designated representative of a Phase I unit that is subject to section 404(d) of the Act, has a tangentially fired boiler, and is unable to install low NO_X burner technology by January 1, 1997 may submit a petition for and receive an extension for meeting the applicable emission limitation under

§ 76.5 where it is demonstrated, to the satisfaction of the Administrator, that:

(i) The unit is located at a source with two or more other units, all of which are Phase I units that are subject to section 404(d) of the Act and have tangentially fired boilers;

(ii) The NO_X control system at the unit was scheduled to be installed by January 1, 1997 and, because of operational problems associated with the NO_X control system, will be redesigned; and

(iii) Installation of the redesigned low NO_X burner technology at the unit cannot be completed by January 1, 1997 without causing system reliability problems.

(2) A complete petition shall include the following elements and shall be submitted by April 28, 1995.

(i) Identification of the unit and the other units at the source;

(ii) A statement describing how the requirements of paragraphs (e)(1)(ii) and (e)(1)(iii) of this section are met;

(iii) The earliest date, not later than December 31, 1997, by which installation of the redesigned low NO_X burner technology can be completed consistent with system reliability; and

(iv) The provisions in paragraph (e)(4) of this section.

(3) To the extent the Administrator determines that a Phase I unit meets the requirements of paragraphs (e)(1) and (e)(2) of this section, the Administrator will approve the petition within 90 days from receipt of the complete petition. The Acid Rain permit governing the unit will be revised in order to incorporate the approved extension, which shall terminate no later than December 31, 1997, by administrative amendment under § 72.83 of this chapter except that the Administrator will have 90 days to take final action.

(4) The unit shall comply with the applicable emission limitation under § 76.5 beginning on the day immediately following the day on which the extension approved under paragraph (e)(3) of this section terminates. Compliance shall be determined as specified in part 75 of this chapter using measured values of NO_X emissions and heat input only for the portion of the year that the emission limit is in effect. If a unit with an approved extension is included in an averaging plan under § 76.11 for year 1997, the unit shall be treated, for the purpose of applying Equation 1 in § 76.11(a)(6) and Equation 2 in § 76.11(d)(1)(ii)(A), as subject to the applicable emission limitation under § 76.5 for the entire year 1997.

§ 76.13 Compliance and excess emissions.

Excess emissions of nitrogen oxides under § 77.6 of this chapter shall be calculated as follows:

(a) For a unit that is not in an approved averaging plan:

(1) Calculate EE_i for each portion of the calendar year that the unit is subject to a different NO_X emission limitation:

$$EE_i = \frac{(R_{ai} - R_{li}) \times HI_i}{2000} \qquad \text{(Equation 3)}$$

Where:

EE_i = Excess emissions for NO_X for the portion of the calendar year (in tons);

R_{ai} = Actual average emission rate for the unit (in lb/mmBtu), determined according to part 75 of this chapter for the portion of the calendar year for which the applicable emission limitation R_l is in effect;

R_{li} = Applicable emission limitation for the unit, (in lb/mmBtu), as specified in § 76.5, 76.6, or 76.7 or as determined under § 76.10;

$$EE = \sum_{i=1}^{n} EE_i \qquad \text{(Equation 4)}$$

HI^i = Actual heat input for the unit, (in mmBtu), determined according to part 75 of this chapter for the portion of the calendar year for which the applicable emission limitation, R_l, is in effect.

(2) If EE_i is a negative number for any portion of the calendar year, the EE value for that portion of the calendar year shall be equal to zero (e.g., if $EE_i = -100$, then $EE_i = 0$).

(3) Sum all EE_i values for the calendar year:

Where:

EE = Excess emissions for NO_X for the year (in tons);

n = The number of time periods during which a unit is subject to different emission limitations; and

(b) For units participating in an approved averaging plan, when all the requirements under § 76.11(d)(1) are not met,

$$EE = \frac{\sum_{i=1}^{n}\left(R_{ai} \times HI_i\right) - \sum_{i=1}^{n}\left(R_{li} \times HI_i\right)}{2000} \qquad \text{(Equation 5)}$$

Where:

EE = Excess emissions for NO_X for the year (in tons);

R_{ai} = Actual annual average emission rate for NO_X for unit i, (in lb/mmBtu), determined according to part 75 of this chapter;

R_{li} = Applicable emission limitation for unit i, (in lb/mmBtu), as specified in § 76.5, 76.6, or 76.7;

HI_i = Actual annual heat input for unit i, mmBtu, determined according to part 75 of this chapter;

n = Number of units in the averaging plan.

§ 76.14 Monitoring, recordkeeping, and reporting.

(a) A petition for an alternative emission limitation demonstration period under § 76.10(d) shall include the following information:

(1) In accordance with § 76.10(d)(4), the following information:

(i) Documentation that the owner or operator solicited bids for a NO_X emission control system designed for application to the specific boiler and designed to achieve the applicable emission limitation in § 76.5, 76.6, or 76.7 on an annual average basis. This documentation must include a copy of all bid specifications.

(ii) A copy of the performance guarantee submitted by the vendor of the installed NO_X emission control system to the owner or operator showing that such system was designed to meet the applicable emission limitation in § 76.5, 76.6, or 76.7 on an annual average basis.

(iii) Documentation describing the operational and combustion conditions that are the basis of the performance guarantee.

(iv) Certification by the primary vendor of the NO_X emission control system that such equipment and associated auxiliary equipment was properly installed according to the modifications and procedures specified by the vendor.

(v) Certification by the designated representative that the owner(s) or operator installed technology that meets the requirements of § 76.10(a)(2).

(2) In accordance with § 76.10(d)(9), the following information:

(i) The operating conditions of the NO_X emission control system including load range, O_2 range, coal volatile matter range, and, for tangentially fired boilers, distribution of combustion air within the NO_X emission control system;

(ii) Certification by the designated representative that the owner(s) or operator have achieved and are following the operating conditions, boiler modifications, and upgrades that formed the basis for the system design and performance guarantee;

(iii) Any planned equipment modifications and upgrades for the purpose of achieving the maximum NO_X reduction performance of the NO_X emission control system that were not included in the design specifications and performance guarantee, but that were achieved prior to submission of this application and are being followed;

(iv) A list of any modifications or replacements of equipment that are to be done prior to the completion of the demonstration period for the purpose of reducing emissions of NO_X; and

(v) The parametric testing that will be conducted to determine the reason or reasons for the failure of the unit to achieve the applicable emission limitation and to verify the proper operation of the installed NO_X emission control

system during the demonstration period. The tests shall include tests in §76.15, which may be modified as follows:

(A) The owner or operator of the unit may add tests to those listed in §76.15, if such additions provide data relevant to the failure of the installed NO_X emission control system to meet the applicable emissions limitation in §76.5, 76.6, or 76.7; or

(B) The owner or operator of the unit may remove tests listed in §76.15 that are shown, to the satisfaction of the permitting authority, not to be relevant to NO_X emissions from the affected unit; and

(C) In the event the performance guarantee or the NO_X emission control system specifications require additional tests not listed in §76.15, or specify operating conditions not verified by tests listed in §76.15, the owner or operator of the unit shall include such additional tests.

(3) In accordance with §76.10(d)(10), the following information for the operating period:

(i) The average NO_X emission rate (in lb/mmBtu) of the specific unit;

(ii) The highest hourly NO_X emission rate (in lb/mmBtu) of the specific unit;

(iii) Hourly NO_X emission rate (in lb/mmBtu), calculated in accordance with part 75 of this chapter;

(iv) Total heat input (in mmBtu) for the unit for each hour of operation, calculated in accordance with the requirements of part 75 of this chapter; and

(v) Total integrated hourly gross unit load (in MWge).

(b) A petition for an alternative emission limitation shall include the following information in accordance with §76.10(e)(6).

(1) Total heat input (in mmBtu) for the unit for each hour of operation, calculated in accordance with the requirements of part 75 of this chapter;

(2) Hourly NO_X emission rate (in lb/mmBtu), calculated in accordance with the requirements of part 75 of this chapter; and

(3) Total integrated hourly gross unit load (MWge).

(c) *Reporting of the costs of low NO_X burner technology applied to Group 1, Phase I boilers.* (1) Except as provided in paragraph (c)(2) of this section, the designated representative of a Phase I unit with a Group 1 boiler that has installed or is installing any form of low NO_X burner technology shall submit to the Administrator a report containing the capital cost, operating cost, and baseline and post-retrofit emission data specified in appendix B to this part. If any of the required equipment, cost, and schedule information are not available (e.g., the retrofit project is still underway), the designated representative shall include in the report detailed cost estimates and other projected or estimated data in lieu of the information that is not available.

(2) The report under paragraph (c)(1) of this section is not required with regard to the following types of Group 1, Phase I units:

(i) Units employing no new NO_X emission control system after November 15, 1990;

(ii) Units employing modifications to boiler operating parameters (e.g., burners out of service or fuel switching) without low NO_X burners or other emission reduction equipment for reducing NO_X emissions;

(iii) Units with wall-fired boilers employing only overfire air and units with tangentially fired boilers employing only separated overfire air; or

(iv) Units beginning installation of a new NO_X emission control system after August 11, 1995.

(3) The report under paragraph (c)(1) of this section shall be submitted to the Administrator by:

(i) 120 days after completion of the low NO_X burner technology retrofit project; or

(ii) May 23, 1995, if the project was completed on or before January 23, 1995.

§76.15 Test methods and procedures.

(a) The owner or operator may use the following tests as a basis for the report required by §76.10(e)(7):

(1) Conduct an ultimate analysis of coal using ASTM D 3176–89 (incorporated by reference as specified in §76.4);

(2) Conduct a proximate analysis of coal using ASTM D 3172–89 (incorporated by reference as specified in §76.4); and

(3) Measure the coal mass flow rate to each individual burner using ASME Power Test Code 4.2 (1991), ''Test Code for Coal Pulverizers'' or ISO 9931 (1991), ''Coal—Sampling of Pulverized Coal Conveyed by Gases in Direct Fired Coal Systems'' (incorporated by reference as specified in § 76.4).

(b) The owner or operator may measure and record the actual NO_X emission rate in accordance with the requirements of this part while varying the following parameters where possible to determine their effects on the emissions of NO_X from the affected boiler:

(1) Excess air levels;

(2) Settings of burners or coal and air nozzles, including tilt and yaw, or swirl;

(3) For tangentially fired boilers, distribution of combustion air within the NO_X emission control system;

(4) Coal mass flow rates to each individual burner;

(5) Coal-to-primary air ratio (based on pound per hour) for each burner, the average coal-to-primary air ratio for all burners, and the deviations of individual burners' coal-to-primary air ratios from the average value; and

(6) If the boiler uses varying types of coal, the type of coal. Provide the results of proximate and ultimate analyses of each type of as-fired coal.

(c) In performing the tests specified in paragraph (a) of this section, the owner or operator shall begin the tests using the equipment settings for which the NO_X emission control system was designed to meet the NO_X emission rate guaranteed by the primary NO_X emission control system vendor. These results constitute the ''baseline controlled'' condition.

(d) After establishing the baseline controlled condition under paragraph (c) of this section, the owner or operator may:

(1) Change excess air levels ± 5 percent from the baseline controlled condition to determine the effects on emissions of NO_X, by providing a minimum of three readings (e.g., with a baseline reading of 20 percent excess air, excess air levels will be changed to 19 percent and 21 percent);

(2) For tangentially fired boilers, change the distribution of combustion air within the NO_X emission control system to determine the effects on NO_X emissions by providing a minimum of three readings, one with the minimum, one with the baseline, and one with the maximum amounts of staged combustion air; and

(3) Show that the combustion process within the boiler is optimized (e.g., that the burners are balanced).

§ 76.16 Alternative compliance.

(a)(1) A State or group of States may submit a petition requesting that the Administrator, or the Administrator, on his or her own motion, may:

(i) Require the owners or operators of the Group 1, Phase II coal-fired utility units with a tangentially fired boiler or a dry bottom wall fired boiler in the State or the group of States to be subject to the applicable emission limitations for NO_X in § 76.5, in lieu of the applicable emission limitations for NO_X in § 76.7; and

(ii) Provide that the owners or operators of the Group 2 coal-fired utility units with a cell burner boiler, cyclone boiler, wet bottom boiler, or vertically fired boiler in the State or the group of States are not subject to the applicable emission limitations for NO_X in § 76.6.

(2) A petition under paragraph (a)(1) of this section must demonstrate that the requirements in paragraphs (b)(1) and (2) of this section are met.

(3) A petition under paragraph (a)(1) of this section may be submitted, but may not be approved by the Administrator, before the State Implementation Plan or Federal Implementation Plan covering the entire State or the State Implementation Plans or Federal Implementation Plans covering the entire group of States become final and federally enforceable.

(b) The Administrator may take the actions set forth in paragraphs (a)(1)(i) and (ii) of this section if he or she finds that, under the State Implementation Plan or Federal Implementation Plan covering the entire State or the State Implementation Plans or Federal Implementation Plans covering the entire group of States:

(1) Each unit that is in the State or the group of States and that, but for the provisions of this section, would be subject to emission limitations under this part.

(i) Is subject to a cap on total annual NO_X emissions or two or more seasonal caps that together limit total annual NO_X emissions;

(ii) May trade authorizations to emit NO_X within each such cap; and

(iii) Must use NO_X emission authorizations to account for the NO_X emissions by such unit and to account for the NO_X emissions resulting from reducing utilization of such unit below its baseline utilization (adjusted for changes in demand for electricity) and shifting utilization to any other unit, or combustion device serving a generator that produces electricity for sale, that is not subject to each such cap; and

(2)(i) Total annual NO_X emissions by all units that are in the State or the group of States and that, but for the provisions of this section, would be subject to emission limitations under this part will be lower than total annual NO_X emissions by such units if each such unit is treated as subject to the applicable emission limitation in §§ 76.5, 76.6, or 76.7 that would apply but for the provisions of this section.

(ii) In the case of a petition under paragraph (a) of this section, total annual NO_X emissions by the units will be determined using the actual utilizations of the units for the last full calendar year prior to submission of the petition but, in any event, for no later than 1999. In the case of action by the Administrator on his or her own motion under paragraph (a) of this section, total annual NO_X emissions by the units will be determined using the actual utilizations of the units for the last full calendar year prior to issuance of the draft decision under paragraph (c) of this section, but, in any event, for no later than 1999.

(c) In acting on a petition or on his or her own motion under paragraph (a) of this section, the Administrator will issue for public comment a draft decision on the petition or a draft decision to act on his or her own motion and then a final decision. The Administrator may issue a draft decision, but not final decision, on a petition or on his or her own motion before the State Implementation Plan or Federal Implementation Plan covering the entire State or the State Implementation Plans or Federal Implementation Plans covering the entire group of States become final and federally enforceable. The draft decision will set forth procedures that will govern issuance of the final decision and will provide for:

(1) Service of notice of issuance of the draft decision on:

(i) Any interested person;

(ii) The air pollution control agencies that have jurisdiction over a unit covered by the draft decision, are in a State whose air quality may be affected by the draft decision and that is contiguous to a State in which such a unit is located, or are in a State that is within 50 miles of a unit covered by the draft decision; and

(iii) On any federally recognized Indian Tribe in an area in which a unit covered by the draft decision is located, whose air quality may be affected by the draft decision and that is in an area that is contiguous to a State in which such a unit is located, or that is in an area that is within 50 miles of a unit covered by the draft decision;

(2) Publication of notice of issuance of the draft decision in the FEDERAL REGISTER and in any State publication designed to give general public notice in the States in which the units covered by the draft decision are located;

(3) A 30-day public comment period and extension or reopening of the comment period by the Administrator for good cause;

(4) A public hearing, upon request or on the Administrator's own motion, to the extent the Administrator determines that a public hearing will contribute to the decision-making process by clarifying one or more significant issues affecting the draft decision;

(5) Consideration by the Administrator of the comments on the draft decision received during the public comment period or any public hearing and written response by the Administrator to any such relevant comments;

(6) Notice of issuance of a final decision using the methods set forth in paragraphs (c)(1) and (2) of this section for providing notice of the draft decision; and

(7) Appeals, governed by part 78 of this chapter, of the final decision.

(d) If, after the Administrator issues a final decision under paragraph (c) of

this section and takes the actions set forth in paragraphs (a)(1)(i) and (ii) of this section with regard to a State or group of States, a State Implementation Plan or Federal Implementation Plan covering the entire State or entire group of States is revised in a way that may affect the basis for the findings on which such decision is based, the Administrator may, upon petition or on his or her own motion, reconsider such decision.

(e) For purposes of this section, the term ''State'' shall mean one of the 48 contiguous States or the District of Columbia.

[61 FR 67163, Dec. 19, 1996; 62 FR 3464, Jan. 23, 1997]

APPENDIX A TO PART 76—PHASE I AFFECTED COAL-FIRED UTILITY UNITS WITH GROUP 1 OR CELL BURNER BOILERS

TABLE 1—PHASE I TANGENTIALLY FIRED UNITS

State	Plant	Unit	Operator
ALABAMA	EC GASTON	5	ALABAMA POWER CO.
GEORGIA	BOWEN	1BLR	GEORGIA POWER CO.
GEORGIA	BOWEN	2BLR	GEORGIA POWER CO.
GEORGIA	BOWEN	3BLR	GEORGIA POWER CO.
GEORGIA	BOWEN	4BLR	GEORGIA POWER CO.
GEORGIA	JACK MCDONOUGH	MB1	GEORGIA POWER CO.
GEORGIA	JACK MCDONOUGH	MB2	GEORGIA POWER CO.
GEORGIA	WANSLEY	1	GEORGIA POWER CO.
GEORGIA	WANSLEY	2	GEORGIA POWER CO.
GEORGIA	YATES	Y1BR	GEORGIA POWER CO.
GEORGIA	YATES	Y2BR	GEORGIA POWER CO.
GEORGIA	YATES	Y3BR	GEORGIA POWER CO.
GEORGIA	YATES	Y4BR	GEORGIA POWER CO.
GEORGIA	YATES	Y5BR	GEORGIA POWER CO.
GEORGIA	YATES	Y6BR	GEORGIA POWER CO.
GEORGIA	YATES	Y7BR	GEORGIA POWER CO.
ILLINOIS	BALDWIN	3	ILLINOIS POWER CO.
ILLINOIS	HENNEPIN	2	ILLINOIS POWER CO.
ILLINOIS	JOPPA	1	ELECTRIC ENERGY INC.
ILLINOIS	JOPPA	2	ELECTRIC ENERGY INC.
ILLINOIS	JOPPA	3	ELECTRIC ENERGY INC.
ILLINOIS	JOPPA	4	ELECTRIC ENERGY INC.
ILLINOIS	JOPPA	5	ELECTRIC ENERGY INC.
ILLINOIS	JOPPA	6	ELECTRIC ENERGY INC.
ILLINOIS	MEREDOSIA	5	CEN ILLINOIS PUB SER.
ILLINOIS	VERMILION	2	ILLINOIS POWER CO.
INDIANA	CAYUGA	1	PSI ENERGY INC.
INDIANA	CAYUGA	2	PSI ENERGY INC.
INDIANA	EW STOUT	50	INDIANAPOLIS PWR & LT.
INDIANA	EW STOUT	60	INDIANAPOLIS PWR & LT.
INDIANA	EW STOUT	70	INDIANAPOLIS PRW & LT.
INDIANA	HT PRITCHARD	6	INDIANAPOLIS PWR & LT.
INDIANA	PETERSBURG	1	INDIANAPOLIS PWR & LT.
INDIANA	PETERSBURG	2	INDIANAPOLIS PWR & LT.
INDIANA	WABASH RIVER	6	PSI ENERGY INC.
IOWA	BURLINGTON	1	IOWA SOUTHERN UTL.
IOWA	ML KAPP	2	INTERSTATE POWER CO.
IOWA	RIVERSIDE	9	IOWA-ILL GAS & ELEC.
KENTUCKY	ELMER SMITH	2	OWENSBORO MUN UTIL.
KENTUCKY	EW BROWN	2	KENTUCKY UTL CO.
KENTUCKY	EW BROWN	3	KENTUCKY UTL CO.
KENTUCKY	GHENT	1	KENTUCKY UTL CO.
MARYLAND	MORGANTOWN	1	POTOMAC ELEC PWR CO.
MARYLAND	MORGANTOWN	2	POTOMAC ELEC PWR CO.
MICHIGAN	JH CAMPBELL	1	CONSUMERS POWER CO.
MISSOURI	LABADIE	1	UNION ELECTRIC CO.
MISSOURI	LABADIE	2	UNION ELECTRIC CO.
MISSOURI	LABADIE	3	UNION ELECTRIC CO.
MISSOURI	LABADIE	4	UNION ELECTRIC CO.
MISSOURI	MONTROSE	1	KANSAS CITY PWR & LT.
MISSOURI	MONTROSE	2	KANSAS CITY PWR & LT.
MISSOURI	MONTROSE	3	KANSAS CITY PWR & LT.
NEW YORK	DUNKIRK	3	NIAGARA MOHAWK PWR.
NEW YORK	DUNKIRK	4	NIAGARA MOHAWK PWR.
NEW YORK	GREENIDGE	6	NY STATE ELEC & GAS.
NEW YORK	MILLIKEN	1	NY STATE ELEC & GAS.

TABLE 1—PHASE I TANGENTIALLY FIRED UNITS—Continued

State	Plant	Unit	Operator
NEW YORK	MILLIKEN	2	NY STATE ELEC & GAS.
OHIO	ASHTABULA	7	CLEVELAND ELEC ILLUM.
OHIO	AVON LAKE	11	CLEVELAND ELEC ILLUM.
OHIO	CONESVILLE	4	COLUMBUS STHERN PWR.
OHIO	EASTLAKE	1	CLEVELAND ELEC ILLUM.
OHIO	EASTLAKE	2	CLEVELAND ELEC ILLUM.
OHIO	EASTLAKE	3	CLEVELAND ELEC ILLUM.
OHIO	EASTLAKE	4	CLEVELAND ELEC ILLUM.
OHIO	MIAMI FORT	6	CINCINNATI GAS & ELEC.
OHIO	WC BECKJORD	5	CINCINNATI GAS & ELEC.
OHIO	WC BECKJORD	6	CINCINNATI GAS & ELEC.
PENNSYLVANIA	BRUNNER ISLAND	1	PENNSYLVANIA PWR & LT.
PENNSYLVANIA	BRUNNER ISLAND	2	PENNSYLVANIA PWR & LT.
PENNSYLVANIA	BRUNNER ISLAND	3	PENNSYLVANIA PWR & LT.
PENNSYLVANIA	CHESWICK	1	DUQUESNE LIGHT CO.
PENNSYLVANIA	CONEMAUGH	1	PENNSYLVANIA ELEC CO.
PENNSYLVANIA	CONEMAUGH	2	PENNSYLVANIA ELEC CO.
PENNSYLVANIA	PORTLAND	1	METROPOLITAN EDISON.
PENNSYLVANIA	PORTLAND	2	METROPOLITAN EDISON.
PENNSYLVANIA	SHAWVILLE	3	PENNSYLVANIA ELEC CO.
PENNSYLVANIA	SHAWVILLE	4	PENNSYLVANIA ELEC CO.
TENNESSEE	GALLATIN	1	TENNESSEE VAL AUTH.
TENNESSEE	GALLATIN	2	TENNESSEE VAL AUTH.
TENNESSEE	GALLATIN	3	TENNESSEE VAL AUTH.
TENNESSEE	GALLATIN	4	TENNESSEE VAL AUTH.
TENNESSEE	JOHNSONVILLE	1	TENNESSEE VAL AUTH.
TENNESSEE	JOHNSONVILLE	2	TENNESSEE VAL AUTH.
TENNESSEE	JOHNSONVILLE	3	TENNESSEE VAL AUTH.
TENNESSEE	JOHNSONVILLE	4	TENNESSEE VAL AUTH.
TENNESSEE	JOHNSONVILLE	5	TENNESSEE VAL AUTH.
TENNESSEE	JOHNSONVILLE	6	TENNESSEE VAL AUTH.
WEST VIRGINIA	ALBRIGHT	3	MONONGAHELA POWER CO.
WEST VIRGINIA	FORT MARTIN	1	MONONGAHELA POWER CO.
WEST VIRGINIA	MOUNT STORM	1	VIRGINIA ELEC & PWR.
WEST VIRGINIA	MOUNT STORM	2	VIRGINIA ELEC & PWR.
WEST VIRGINIA	MOUNT STORM	3	VIRGINIA ELEC & PWR.
WISCONSIN	GENOA	1	DAIRYLAND POWER COOP.
WISCONSIN	SOUTH OAK CREEK	7	WISCONSIN ELEC POWER.
WISCONSIN	SOUTH OAK CREEK	8	WISCONSIN ELEC POWER.

TABLE 2—PHASE I DRY BOTTOM-FIRED UNITS

State	Plant	Unit	Operator
ALABAMA	COLBERT	1	TENNESSEE VAL AUTH.
ALABAMA	COLBERT	2	TENNESSEE VAL AUTH.
ALABAMA	COLBERT	3	TENNESSEE VAL AUTH.
ALABAMA	COLBERT	4	TENNESSEE VAL AUTH.
ALABAMA	COLBERT	5	TENNESSEE VAL AUTH.
ALABAMA	EC GASTON	1	ALABAMA POWER CO.
ALABAMA	EC GASTON	2	ALABAMA POWER CO.
ALABAMA	EC GASTON	3	ALABAMA POWER CO.
ALABAMA	EC GASTON	4	ALABAMA POWER CO.
FLORIDA	CRIST	6	GULF POWER CO.
FLORIDA	CRIST	7	GULF POWER CO.
GEORGIA	HAMMOND	1	GEORGIA POWER CO.
GEORGIA	HAMMOND	2	GEORGIA POWER CO.
GEORGIA	HAMMOND	3	GEORGIA POWER CO.
GEORGIA	HAMMOND	4	GEORGIA POWER CO.
ILLINOIS	GRAND TOWER	9	CEN ILLINOIS PUB SER.
INDIANA	CULLEY	2	STHERN IND GAS & EL.
INDIANA	CULLEY	3	STHERN IND GAS & EL.
INDIANA	GIBSON	1	PSI ENERGY INC.
INDIANA	GIBSON	2	PSI ENERGY INC.
INDIANA	GIBSON	3	PSI ENERGY INC.
INDIANA	GIBSON	4	PSI ENERGY INC.
INDIANA	RA GALLAGHER	1	PSI ENERGY INC.
INDIANA	RA GALLAGHER	2	PSI ENERGY INC.
INDIANA	RA GALLAGHER	3	PSI ENERGY INC.
INDIANA	RA GALLAGHER	4	PSI ENERGY INC.

TABLE 2—PHASE I DRY BOTTOM-FIRED UNITS—Continued

State	Plant	Unit	Operator
INDIANA	FRANK E RATTS	1SG1	HOOSIER ENERGY REC.
INDIANA	FRANK E RATTS	2SG1	HOOSIER ENERGY REC.
INDIANA	WABASH RIVER	1	PSI ENERGY INC.
INDIANA	WABASH RIVER	2	PSI ENERGY INC.
INDIANA	WABASH RIVER	3	PSI ENERGY INC.
INDIANA	WABASH RIVER	5	PSI ENERGY INC.
IOWA	DES MOINES	11	IOWA PWR & LT CO.
IOWA	PRAIRIE CREEK	4	IOWA ELEC LT & PWR.
KANSAS	QUINDARO	2	KS CITY BD PUB UTIL.
KENTUCKY	COLEMAN	C1	BIG RIVERS ELEC CORP.
KENTUCKY	COLEMAN	C2	BIG RIVERS ELEC CORP.
KENTUCKY	COLEMAN	C3	BIG RIVERS ELEC CORP.
KENTUCKY	EW BROWN	1	KENTUCKY UTL CO.
KENTUCKY	GREEN RIVER	5	KENTUCKY UTL CO.
KENTUCKY	HMP&L STATION 2	H1	BIG RIVERS ELEC CORP.
KENTUCKY	HMP&L STATION 2	H2	BIG RIVERS ELEC CORP.
KENTUCKY	HL SPURLOCK	1	EAST KY PWR COOP.
KENTUCKY	JS COOPER	1	EAST KY PWR COOP.
KENTUCKY	JS COOPER	2	EAST KY PWR COOP.
MARYLAND	CHALK POINT	1	POTOMAC ELEC PWR CO.
MARYLAND	CHALK POINT	2	POTOMAC ELEC PWR CO.
MINNESOTA	HIGH BRIDGE	6	NORTHERN STATES PWR.
MISSISSIPPI	JACK WATSON	4	MISSISSIPPI PWR CO.
MISSISSIPPI	JACK WATSON	5	MISSISSIPPI PWR CO.
MISSOURI	JAMES RIVER	5	SPRINGFIELD UTL.
OHIO	CONESVILLE	3	COLUMBUS STHERN PWR.
OHIO	EDGEWATER	13	OHIO EDISON CO.
OHIO	MIAMI FORT [1]	5–1	CINCINNATI GAS&ELEC.
OHIO	MIAMI FORT [1]	5–2	CINCINNATI GAS&ELEC.
OHIO	PICWAY	9	COLUMBUS STHERN PWR.
OHIO	RE BURGER	7	OHIO EDISON CO.
OHIO	RE BURGER	8	OHIO EDISON CO.
OHIO	WH SAMMIS	5	OHIO EDISON CO.
OHIO	WH SAMMIS	6	OHIO EDISON CO.
PENNSYLVANIA	ARMSTRONG	1	WEST PENN POWER CO.
PENNSYLVANIA	ARMSTRONG	2	WEST PENN POWER CO.
PENNSYLVANIA	MARTINS CREEK	1	PENNSYLVANIA PWR & LT.
PENNSYLVANIA	MARTINS CREEK	2	PENNSYLVANIA PWR & LT.
PENNSYLVANIA	SHAWVILLE	1	PENNSYLVANIA ELEC CO.
PENNSYLVANIA	SHAWVILLE	2	PENNSYLVANIA ELEC CO.
PENNSYLVANIA	SUNBURY	3	PENNSYLVANIA PWR & LT.
PENNSYLVANIA	SUNBURY	4	PENNSYLVANIA PWR & LT.
TENNESSEE	JOHNSONVILLE	7	TENNESSEE VAL AUTH.
TENNESSEE	JOHNSONVILLE	8	TENNESSEE VAL AUTH.
TENNESSEE	JOHNSONVILLE	9	TENNESSEE VAL AUTH.
TENNESSEE	JOHNSONVILLE	10	TENNESSEE VAL AUTH.
WEST VIRGINIA	HARRISON	1	MONONGAHELA POWER CO.
WEST VIRGINIA	HARRISON	2	MONONGAHELA POWER CO.
WEST VIRGINIA	HARRISON	3	MONONGAHELA POWER CO.
WEST VIRGINIA	MITCHELL	1	OHIO POWER CO.
WEST VIRGINIA	MITCHELL	2	OHIO POWER CO.
WISCONSIN	JP PULLIAM	8	WISCONSIN PUB SER CO.
WISCONSIN	NORTH OAK CREEK [2]	1	WISCONSIN ELEC PWR.
WISCONSIN	NORTH OAK CREEK [2]	2	WISCONSIN ELEC PWR.
WISCONSIN	NORTH OAK CREEK [2]	3	WISCONSIN ELEC PWR.
WISCONSIN	NORTH OAK CREEK [2]	4	WISCONSIN ELEC PWR.
WISCONSIN	SOUTH OAK CREEK [2]	5	WISCONSIN ELEC PWR.
WISCONSIN	SOUTH OAK CREEK [2]	6	WISCONSIN ELEC PWR.

[1] Vertically fired boiler.
[2] Arch-fired boiler.

TABLE 3—PHASE I CELL BURNER TECHNOLOGY UNITS

State	Plant	Unit	Operator
INDIANA	WARRICK	4	STHERN IND GAS & EL.
MICHIGAN	JH CAMPBELL	2	CONSUMERS POWER CO.
OHIO	AVON LAKE	12	CLEVELAND ELEC ILLUM.

TABLE 3—PHASE I CELL BURNER TECHNOLOGY UNITS—Continued

State	Plant	Unit	Operator
OHIO	CARDINAL	1	CARDINAL OPERATING.
OHIO	CARDINAL	2	CARDINAL OPERATING.
OHIO	EASTLAKE	5	CLEVELAND ELEC ILLUM.
OHIO	GENRL JM GAVIN	1	OHIO POWER CO.
OHIO	GENRL JM GAVIN	2	OHIO POWER CO.
OHIO	MIAMI FORT	7	CINCINNATI GAS & EL.
OHIO	MUSKINGUM RIVER	5	OHIO POWER CO.
OHIO	WH SAMMIS	7	OHIO EDISON CO.
PENNSYLVANIA	HATFIELDS FERRY	1	WEST PENN POWER CO.
PENNSYLVANIA	HATFIELDS FERRY	2	WEST PENN POWER CO.
PENNSYLVANIA	HATFIELDS FERRY	3	WEST PENN POWER CO.
TENNESSEE	CUMBERLAND	1	TENNESSEE VAL AUTH.
TENNESSEE	CUMBERLAND	2	TENNESSEE VAL AUTH.
WEST VIRGINIA	FORT MARTIN	2	MONONGAHELA POWER CO.

APPENDIX B TO PART 76—PROCEDURES AND METHODS FOR ESTIMATING COSTS OF NITROGEN OXIDES CONTROLS APPLIED TO GROUP 1, BOILERS

1. Purpose and Applicability

This technical appendix specifies the procedures, methods, and data that the Administrator will use in establishing ''***the degree of reduction achievable through this retrofit application of the best system of continuous emission reduction, taking into account available technology, costs, and energy and environmental impacts; and which is comparable to the costs of nitrogen oxides controls set pursuant to subsection (b)(1) (of section 407 of the Act).'' In developing the allowable NO_X emissions limitations for Group 2 boilers pursuant to subsection (b)(2) of section 407 of the Act, the Administrator will consider only those systems of continuous emission reduction that, when applied on a retrofit basis, are comparable in cost to the cost in constant dollars of low NO_X burner technology applied to Group 1, Phase I boilers.

The Administrator will evaluate the capital cost (in dollars per kilowatt electrical ($/kW)), the operating and maintenance costs (in $/year), and the cost-effectiveness (in annualized $/ton NO_X removed) of installed low NO_X burner technology controls over a range of boiler sizes (as measured by the gross electrical capacity of the associated generator in megawatt electrical (MW)) and utilization rates (in percent gross nameplate capacity on an annual basis) to develop estimates of the capital costs and cost effectiveness for Group 1, Phase I boilers. The following units will be excluded from these determinations of the capital costs and cost effectiveness of NO_X controls set pursuant to subsection (b)(1) of section 407 of the Act: (1) Units employing an alternative technology, or overfire air as applied to wall-fired boilers or separated overfire air as applied to tangentially fired boilers, in lieu of low NO_X burner technology for reducing NO_X emissions; (2) units employing no controls, only controls installed before November 15, 1990, or only modifications to boiler operating parameters (e.g., burners out of service or fuel switching) for reducing NO_X emissions; and (3) units that have not achieved the applicable emission limitation.

2. Average Capital Cost for Low NO_X Burner Technology Applied to Group 1 Boilers

The Administrator will use the procedures, methods, and data specified in this section to estimate the average capital cost (in $/kW) of installed low NO_X burner technology applied to Group 1 boilers.

2.1 Using cost data submitted pursuant to the reporting requirements in section 4 below, boiler-specific actual or estimated actual capital costs will be determined for each unit in the population specified in section 1 above for assessing the costs of installed low NO_X burner technology. The scope of installed low NO_X burner technology costs will include the following capital costs for retrofit application: (1) For the burner portion—burners or air and coal nozzles, burner throat and waterwall modifications, and windbox modifications; and, where applicable, (2) for the combustion air staging portion—waterwall modifications or panels, windbox modifications, and ductwork, and (3) scope adders or supplemental equipment such as replacement or additional fans, dampers, or ignitors necessary for the proper operation of the low NO_X burner technology. Capital costs associated with boiler restoration or refurbishment such as replacement of air heaters, asbestos abatement, and recasing will not be included in the cost basis for installed low NO_X burner technology. The scope of installed low NO_X burner technology retrofit capital costs will include materials, construction and installation labor, engineering, and overhead costs.

2.2 Using gross nameplate capacity (in MW) for each unit as reported in the National Allowance Data Base (NADB), boiler-

specific capital costs will be converted to a $/kW basis.

2.3 Capital cost curves ($/kW versus boiler size in MW) or equations for installed low NO_X burner technology retrofit costs will be developed for: (1) Dry bottom wall fired boilers (excluding units applying cell burner technology) and (2) tangentially fired boilers.

3. [Reserved]

4. Reporting Requirements

4.1 The following information is to be submitted by each designated representative of a Phase I affected unit subject to the reporting requirements of § 76.14(c):

4.1.1 Schedule and dates for baseline testing, installation, and performance testing of low NO_X burner technology.

4.1.2 Estimates of the annual average baseline NO_X emission rate, as specified in section 3.1.1, and the annual average controlled NO_X emission rate, as specified in section 3.1.2, including the supporting continuous emission monitoring or other test data.

4.1.3 Copies of pre-retrofit and post-retrofit performance test reports.

4.1.4 Detailed estimates of the capital costs based on actual contract bids for each component of the installed low NO_X burner technology including the items listed in section 2.1. Indicate number of bids solicited. Provide a copy of the actual agreement for the installed technology.

4.1.5 Detailed estimates of the capital costs of system replacements or upgrades such as coal pipe changes, fan replacements/upgrades, or mill replacements/upgrades undertaken as part of the low NO_X burner technology retrofit project.

4.1.6 Detailed breakdown of the actual costs of the completed low NO_X burner technology retrofit project where low NO_X burner technology costs (section 4.1.4) are disaggregated, if feasible, from system replacement or upgrade costs (section 4.1.5).

4.1.7 Description of the probable causes for significant differences between actual and estimated low NO_X burner technology retrofit project costs.

4.1.8 Detailed breakdown of the burner and, if applicable, combustion air staging system annual operating and maintenance costs for the items listed in section 3.3 before and after the installation, shakedown, and/or optimization of the installed low NO_X burner technology. Include estimates and a description of the probable causes of the incremental annual operating and maintenance costs (or savings) attributable to the installed low NO_X burner technology.

4.2 All capital cost estimates are to be broken down into materials costs, construction and installation labor costs, and engineering and overhead costs. All operating and maintenance costs are to be broken down into maintenance materials costs, maintenance labor costs, operating labor costs, and fan electricity costs. All capital and operating costs are to be reported in dollars with the year of expenditure or estimate specified for each component.

[60 FR 18761, Apr. 13, 1995, as amended at 61 FR 67164, Dec. 19, 1996; 62 FR 3464, Jan. 23, 1997]

PART 77—EXCESS EMISSIONS

Sec.
77.1 Purpose and scope.
77.2 General.
77.3 Offset plans for excess emissions of sulfur dioxide.
77.4 Administrator's action on proposed offset plans.
77.5 Deduction of allowances to offset excess emissions of sulfur dioxide.
77.6 Penalties for excess emissions of sulfur dioxide and nitrogen oxides.

AUTHORITY: 42 U.S.C. 7601 and 7651, et seq.

SOURCE: 58 FR 3757, Jan. 11, 1993, unless otherwise noted.

§ 77.1 Purpose and scope.

(a) This part sets forth the excess emissions offset planning and offset penalty requirements under section 411 of the Clean Air Act, 42 U.S.C. 7401, et seq., as amended by Public Law 101–549 (November 15, 1990). These requirements shall apply to the owners and operators and, to the extent applicable, the designated representative of each affected unit and affected source under the Acid Rain Program.

(b) Nothing in this part shall limit or otherwise affect the application of sections 112(r)(9), 113, 114, 120, 303, 304, or 306 of the Act, as amended. Any allowance deduction, excess emission penalty, or interest required under this part shall not affect the liability of the affected unit's and affected source's owners and operators for any additional fine, penalty, or assessment, or their obligation to comply with any other remedy, for the same violation, as ordered under the Act.

§ 77.2 General.

Part 72 of this chapter, including §§ 72.2 (definitions), 72.3 (measurements, abbreviations, and acronyms), 72.4 (federal authority), 72.5 (State authority),

72.6 (applicability), 72.7 (new units exemption), 72.8 (retired units exemption), 72.9 (standard requirements), 72.10 (availability of information), and 72.11 (computation of time), shall apply to this part. The procedures for appeals of decisions of the Administrator under this part are contained in part 78 of this chapter.

§ 77.3 Offset plans for excess emissions of sulfur dioxide.

(a) *Applicability*. The owners and operators of any affected unit that has excess emissions of sulfur dioxide in any calendar year shall be liable to offset the amount of such excess emissions by an equal amount of allowances from the unit's Allowance Tracking System account.

(b) *Deadline*. Not later than 60 days after the end of any calendar year during which an affected unit had excess emissions of sulfur dioxide (except for any increase in excess emissions under § 72.91(b) of this chapter), the designated representative for the unit shall submit to the Administrator a complete proposed offset plan to offset those emissions. Each day after the 60-day deadline that the designated representative fails to submit a complete proposed offset plan shall be a separate violation of this part.

(c) *Number of Plans*. The designated representative shall submit a proposed offset plan for each affected unit with excess emissions of sulfur dioxide.

(d) *Contents of Plan*. A complete proposed offset plan shall include the following elements in a format prescribed by the Administrator for the unit and for the calendar year for which the plan is submitted:

(1) Identification of the unit.

(2) If the unit had excess emissions for the calendar year prior to the year for which the plan is submitted, an explanation of how and why the excess emissions occurred for the year for which the plan is submitted and a description of any measures that were or will be taken to prevent excess emissions in the future.

(3) The amount of excess emissions of sulfur dioxide (in tons/year) for the year for which the plan is submitted and the number of allowances required to be deducted from the unit's Allowance Tracking System account to offset the excess emissions.

(4) At the designated representative's option, the serial numbers of the allowances that are to be deducted from the unit's Allowance Tracking System account.

(5) Whether the allowances are to be deducted immediately from the unit's account or, if not, the date on which they are to be deducted.

(6) If the proposed offset plan does not propose a deduction of the amount of allowances under paragraph (d)(3) of this section from the compliance subaccount during the year after the year for which the plan is submitted, a demonstration that such a deduction will interfere with electric reliability.

§ 77.4 Administrator's action on proposed offset plans.

(a) *Determination of Completeness*. The Administrator will determine whether the proposed offset plan is complete within 30 days of receipt by the Administrator. The offset plan shall be deemed complete if the Administrator fails to notify the designated representative to the contrary within 30 days of receipt or when the Administrator approves the offset plan and deducts allowances in accordance with paragraph (b)(1) of this section.

(b) *Review of proposed offset plans*. (1) If the designated representative submits a complete proposed offset plan for immediate deduction, from the unit's compliance subaccount, of all allowances required to offset excess emissions of sulfur dioxide, the Administrator will approve the proposed offset plan without further review and will serve written notice of any approval on the designated representative and on any persons entitled to written notice under paragraphs (g)(2)(i) (B), (C) and (D) of this section. The Administrator will also give notice of any approval in the FEDERAL REGISTER. The plan will be incorporated into the unit's Acid Rain permit in accordance with § 72.84 (automatic permit amendment) and will not be subject to the requirements of paragraphs (d) through (k) of this section.

(2) Notwithstanding paragraph (b)(1) of this section, the Administrator may, in his or her discretion, require that

the proposed offset plan under paragraph (b)(1) of this section be reviewed under paragraphs (c) through (k) of this section. The Administrator may exercise such discretion where he or she determines that review of the plan is necessary to ensure compliance with the emissions limitation and reduction goals or other purposes of title IV of the Act.

(3) If the designated representative submits a complete proposed offset plan that does not meet the requirements of paragraph (b)(1) of this section, the Administrator will review the plan under paragraphs (c) through (k) of this section.

(c) *Supplemental Information.* (1)(i) Regardless of whether the proposed offset plan is complete under paragraph (a) of this section, the Administrator may require submission of any additional information that the Administrator determines is necessary to approve an offset plan.

(ii) Such supplemental information may include, but is not limited to:

(A) A description of the measures that are proposed to be taken to ensure that the unit will have sufficient allowances to offset the excess emissions and to prevent excess emissions in future years;

(B) A schedule of compliance with appropriate increments of progress for the proposed measures; and

(C) A schedule for the submission of progress reports, and supporting documentation, describing actions taken and actions remaining to be taken under the schedule of compliance and any proposed adjustments to the schedule of compliance.

(2)(i) The designated representative shall submit the information required under paragraph (c)(1) of this section within 30 days after he or she is notified of the requirement for supplemental information unless the Administrator allows for additional time to collect and submit the information.

(ii) If the designated representative fails to submit the supplemental information within the required time period, the Administrator may disapprove the proposed offset plan.

(d) *Draft Offset Plan.* (1) After the Administrator receives a complete proposed offset plan and any supplemental information, the Administrator will prepare a draft offset plan that incorporates in whole, in part, or with changes or conditions as appropriate, the proposed offset plan or disapprove a draft offset plan for the affected unit. Regardless of whether the Administrator required the submission of the information set forth in paragraph (c)(1)(ii) of this section, the draft offset plan may include, among other requirements and conditions as determined to be appropriate by the Administrator, the submission of schedules of compliance, progress reports, and monitoring and other information.

(2) The draft offset plan will be based on the information submitted by the designated representative for the affected unit and other relevant information.

(3) The Administrator will serve a copy of the draft offset plan and the statement of basis on the designated representative of the affected unit.

(4) The Administrator will provide a 30-day period for public comment, and opportunity to request a public hearing, on the draft offset plan or disapproval of a draft offset plan in accordance with the public notice required under paragraph (g)(1)(i)(A) of this section.

(e) *Offset Plan Administrative Record.* (1) The Administrator will prepare an administrative record for an offset plan or disapproval of an offset plan. The administrative record will contain:

(i) The proposed offset plan and any supporting or supplemental information submitted by the designated representative;

(ii) The draft offset plan;

(iii) The statement of basis;

(iv) Copies of all documents relied on by the Administrator in approving or disapproving the draft offset plan (including any records of discussions or conferences with owners, operators or the designated representative of the unit or interested persons regarding the draft offset plan) or, for any such documents that are readily available, a statement of their location;

(v) Copies of all written public comments submitted on the draft offset plan or disapproval of a draft offset plan;

(vi) The record of any public hearing on the draft offset plan or disapproval of a draft offset plan;

(vii) The offset plan approved by the Administrator; and

(viii) Any response to public comments submitted on the draft offset plan or disapproval of a draft offset plan, including any documents cited in the response and any other documents relied on by the Administrator or, for any such documents that are readily available, a statement of their location.

(2) The Administrator will approve or disapprove an offset plan within 6 months of receipt of a complete proposed offset plan.

(f) *Statement of Basis.* (1) The statement of basis will briefly set forth significant factual, legal, and policy considerations on which the Administrator relied in approving or disapproving the draft offset plan.

(2) The statement of basis will include:

(i) The reasons, and supporting authority, for approval or disapproval of any proposed offset plan that does not require deduction of allowances during the year after the year for which the plan is submitted, including references to applicable statutory or regulatory provisions and to the administrative record; and

(ii) The name, address, and telephone and facsimile number of the EPA office processing the approval or disapproval of the offset plan.

(g) *Opportunities for Public Comment on Draft Offset Plans.*

(1) *Generally.* (i) The Administrator will give public notice of the following:

(A) The draft offset plan or disapproval of a draft offset plan and the opportunity for public comment and to request a public hearing; and

(B) Date, time, location, and procedures for any scheduled hearing on the draft offset plan or the disapproval of a draft offset plan.

(ii) Any public notice given under this section may be for the approval or disapproval of one or more draft offset plans.

(2) *Methods.* The Administrator will give the public notice required by this section by:

(i) Serving written notice on the following persons (except to the extent any such person has waived his or her right to receive such notice):

(A) The designated representative;

(B) The State or local air pollution agency and any utility regulatory authority with jurisdiction over the owners of the unit covered by the proposed offset plan;

(C) The State or local air pollution agency for any contiguous State whose air quality may be affected by, or for any State located within a 50-mile radius of, the unit covered by the proposed offset plan; and

(D) Any interested person.

(ii) Giving notice by publication in the FEDERAL REGISTER and in a newspaper of general circulation in the area where the unit is located or in a State publication designed to give general public notice.

(3) *Contents.* All public notices issued under this part will contain the following information:

(i) Identification of the EPA office processing the approval or disapproval of the draft offset plan for which the notice is being given.

(ii) Identification of the designated representative for the affected unit.

(iii) Identification of each affected unit covered by the proposed offset plan.

(iv) The amount of excess emissions that must be offset and the date on which the allowances are proposed to be deducted.

(v) The address and office hours of a public location where the administrative record is available for public inspection and a statement that all information submitted by the designated representative and not protected as confidential pursuant to section 114(c) of the Act is available for public inspections as part of the administrative record.

(vi) For public notice under paragraph (g)(1)(i)(A) of this section, a brief description of the public comment procedures, including:

(A) A 30-day public comment period beginning the date of publication of the notice or, in the case of an extension or reopening of the public comment period, such period as the Administrator deems appropriate;

(B) The address where public comments should be sent;

(C) Required formats and contents for public comment;

(D) An opportunity to request a public hearing to occur not earlier than 15 days after public notice is given and the location, date, time, and procedures of any scheduled public hearing; and

(E) Any other means by which the public may participate.

(4) *Extensions and Reopenings of the Public Comment Period.* On the Administrator's own motion, or on the request for any person, the Administrator may, at his or her discretion, extend or reopen the public comment period where he or she finds that doing so will contribute to the decision-making process by clarifying one or more significant issues affecting the draft offset plan or disapproval of a draft offset plan. Notice of any such extension or reopening will be given under paragraph (g)(1)(i)(A) of this section.

(h) *Public comments.* (1) General. During the public comment period, any person may submit written comments on the draft offset plan or disapproval of a draft offset plan.

(2) Form. (i) Comments shall be submitted in duplicate.

(ii) The submission shall clearly indicate the draft offset plan approval or disapproval to which the comments apply.

(iii) The submission shall clearly indicate the name of the commenter, his or her interest, and his or her affiliation, if any, to owners and operators of any unit covered by the proposed offset plan.

(3) Contents. Timely comments on any aspect of a draft offset plan or disapproval of a draft offset plan will be considered unless they concern issues that are not relevant, such as:

(i) The environmental effects of acid rain, acid deposition, sulfur dioxide, or nitrogen oxides generally; and

(ii) Offset plan approval procedures or actions on other proposed offset plans that are not relevant to approval or disapproval of the draft offset plan in question.

(4) Persons who do not wish to raise issues on the draft offset plan or denial of a draft offset plan, but who wish to be notified of any subsequent actions concerning such matter, may so indicate during the public comment period or at any other time. The Administrator will place their names on a list of interested persons.

(i) *Opportunity for Public Hearing.* (1) During the public comment period, any person may request a public hearing. A request for a public hearing shall be made in writing and shall state the issues proposed to be raised in the hearing.

(2) On the Administrator's own motion or on the request of any person, the Administrator may, at his or her discretion, hold a public hearing whenever the Administrator finds that such a hearing will contribute to the decision-making process by clarifying one or more significant issues affecting the draft offset plan or disapproval of a draft offset plan. Public hearings will not be held on issues under paragraphs (h)(3) (i) and (ii) of this section.

(3) During a public hearing under this section, any person may submit oral or written comments concerning the draft offset plan or disapproval of a draft offset plan. The Administrator may set reasonable limits on the time allowed for oral statements and will require the submission of written summaries of each oral statement.

(4) The Administrator will assure that a record is made of the hearing.

(j) *Response to Comments.* (1) The Administrator will consider comments on the draft offset plan or disapproval of a draft offset plan received during the public comment period and any public hearing. The Administrator is not required to consider comments otherwise received.

(2) In approving or disapproving an offset plan, the Administrator will:

(i) Identify any draft offset plan provision or portion of the statement of basis that has been changed and the reasons for the change; and

(ii) Briefly describe and respond to relevant comments under paragraph (j)(1) of this section.

(k) *Approval and Effective Date of Excess Emissions Offset Plans.* (1) After the close of the public comment period, the Administrator will approve an offset plan requiring allowance deductions in an amount equal to the unit's tons of

excess emissions or disapprove an offset plan. The Administrator will serve a copy of any approved offset plan and the response to comment on the designated representative for the affected unit involved and serve written notice of the approval or disapproval of the offset plan on any persons who are entitled to written notice under paragraphs (g)(2)(i) (B), (C), and (D) of this section. The Administrator will also give notice in the FEDERAL REGISTER.

(2) The Administrator will approve an offset plan requiring deduction from the unit's compliance subaccount, by December 31 of the year after the year for which the report is submitted, of all allowances necessary to offset the excess emissions except to the extent the designated representative of the unit demonstrates that such a deduction will interfere with electric reliability.

(3) Upon approval of the offset plan by the Administrator, the offset plan will be incorporated into the Acid Rain permit in accordance with §72.84 (automatic permit amendment) and shall supersede any inconsistent provision of the permit.

§77.5 Deduction of allowances to offset excess emissions of sulfur dioxide.

(a) The Administrator will deduct allowances to offset excess emissions in accordance with the offset plan approved under §77.4(b) (1) or (k) or in accordance with §72.91(b) of this chapter.

(b) The designated representative shall hold enough allowances in the appropriate compliance subaccount to cover the deductions to be made in accordance with paragraph (a) or paragraph (c) of this section.

(c) If the designated representative does not submit a timely and complete proposed offset plan, or if the Administrator disapproves a proposed offset plan under §77.4 (c) or (k), the Administrator will immediately deduct allowances, from the unit's compliance subaccount on a first-in, first-out basis in accordance with §73.35(c)(2) of this chapter, equal to the amount of the unit's excess emissions of sulfur dioxide.

(d) If a compliance subaccount does not contain adequate allowances to offset the excess emissions, the Administrator will deduct the required allowances whenever allowances are recorded to that account.

§77.6 Penalties for excess emissions of sulfur dioxide and nitrogen oxides.

(a) If excess emissions of sulfur dioxide or nitrogen oxides occur at an affected unit during any year, the owners and operators of the affected unit shall pay, without demand, an excess emissions penalty, as calculated under paragraph (b) of this section. Such payment shall be submitted to the Administrator no later than 60 days after the end of any year during which excess emissions occurred at an affected unit or, for any increase in excess emissions of sulfur dioxide determined after adjustments made under §72.91(b) of this chapter, or §74.44(c)(2) of this chapter, by July 31 of the year in which the adjustments are made.

(b) *Penalty formula.* (1) The following formulas shall be used to determine the excess emissions penalty:

Penalty for excess emissions of sulfur dioxide=$2000/ton × annual adjustment factor × tons of excess emissions of sulfur dioxide.

Penalty for excess emissions of nitrogen oxides=$2000/ton × annual adjustment factor × tons of excess emissions of nitrogen oxides.

(i) The annual adjustment factor will be calculated as follows:

Annual adjustment factor=1+{[CPI(year)−CPI(1990)]/CPI(1990)}

where:

(A) ''CPI(year)'' is the Consumer Price Index as defined in §72.2 of this chapter and ''year'' is the year in which the unit had excess emissions.

(B) ''CPI(1990)'' is the Consumer Price Index for 1990, as defined in §72.2 of this chapter.

(ii) The Administrator will publish the annual adjustment factor in the FEDERAL REGISTER by October 15 of each year beginning in 1995.

(2) The penalty may be rounded to the nearest dollar after completing the calculation in paragraph (b)(1)(i) of this section.

(3) The penalty for excess emissions of sulfur dioxide shall be paid separately from the payment for excess

emissions of nitrogen oxides. Each payment shall be accompanied by a document, in a format prescribed by the Administrator, indicating the unit for which the payment is made, whether the payment is for excess emissions of sulfur dioxide or nitrogen oxides, the number of tons of excess emissions, the penalty amount, and the check or money order number of the payment.

(c) If an excess emissions penalty due under this part is not paid on or before the applicable deadline under paragraph (a) of this section, the penalty shall be subject to interest charges in accordance with the Debt Collection Act (31 U.S.C. 3717). Interest shall begin to accrue on the date on which the Administrator mails, to the designated representative of the unit with excess emissions, a demand notice for the payment.

(d)(1) Except for wire transfers made in accordance with paragraph (d)(2) of this section, payments of penalties shall be made by money order, cashier's check, certified check, or U.S. Treasury check made payable to the ''U.S. EPA.''

(2) Payments made under paragraph (c)(1) of this section shall be mailed to the following address, unless the Administrator has notified the designated representative of a different address: U.S. EPA: Headquarters Accounting Operations Branch, Acid Rain Excess Emissions Penalties, P.O. Box 952491, St. Louis, MO 63195–2491.

(3) Payments of penalties of $25,000 or more may be made by wire transfer to the U.S. Treasury at the Federal Reserve Bank of New York.

(e) If the Administrator determines that overpayment has been made, he or she will refund the overpayment without interest, as promptly as administratively possible.

(f) Excess emissions in any year resulting directly from an order issued in that year under section 110(f) of the Act shall not be subject to the penalty payment requirements of this section; *provided* that the designated representative of any unit subject to such order shall advise the Administrator within 30 days of issuance of the order that the order will result in such excess emissions.

[58 FR 3757, Jan. 11, 1993, as amended at 60 FR 17131, Apr. 4, 1995]

PART 78—APPEAL PROCEDURES FOR ACID RAIN PROGRAM

Sec.

78.1 Purpose and scope.
78.2 General.
78.3 Petition for administrative review and request for evidentiary hearing.
78.4 Filings.
78.5 Limitation on filing or presenting new evidence and raising new issues.
78.6 Action on petition for administrative review.
78.7 Stays of contested Acid Rain requirements pending appeal.
78.8 Consolidation and severance of appeals proceedings.
78.9 Notice of the filing of petition for administrative review.
78.10 *Ex parte* communications during pendency of a hearing.
78.11 Intervenors.
78.12 Standard of review.
78.13 Scheduling orders and pre-hearing conferences.
78.14 Evidentiary hearing procedure.
78.15 Motions in evidentiary hearings.
78.16 Record of appeal proceeding.
78.17 Proposed findings and conclusions and supporting brief.
78.18 Proposed decision.
78.19 Interlocutory appeal.
78.20 Appeal of decision of Administrator or proposed decision to the Environmental Appeals Board.

AUTHORITY: 42 U.S.C. 7601 and 7651, et. seq.

SOURCE: 58 FR 3760, Jan. 11, 1993, unless otherwise noted.

§ 78.1 Purpose and scope.

(a) This part shall govern appeals of any decision of the Administrator under the Acid Rain Program that, in the absence of an administrative appeal, will be final agency action; *provided* that matters listed in § 78.3(d) and interim decisions, such as draft Acid Rain permits or proposed alternative monitoring systems, may not be appealed.

(b) The decisions of the Administrator that may be appealed include but are not limited to:

(1) Under part 72 of this chapter;

(i) The determination of incompleteness of an Acid Rain permit application;

(ii) The issuance or denial of an Acid Rain permit and approval or disapproval of a compliance option by the Administrator;

(iii) The approval or disapproval of an early ranking application for Phase I extension under § 72.42 of this chapter;

(iv) The final determination of whether a technology is a qualified repowering technology under § 72.44 of this chapter;

(v) The issuance or denial of a written exemption for new units or retired units under §§ 72.7 and 72.8 of this chapter;

(vi) The approval or disapproval of a permit revision;

(vii) The decision on the deduction or return of allowances under §§ 72.41, 72.42, 72.43, 72.44, 72.91(b), and 72.92 (a) and (c) of this chapter; and

(viii) The failure to issue an Acid Rain permit in accordance with the deadline under § 72.74(b) of this chapter.

(2) Under part 73 of this chapter,

(i) The decision on a claim of error in a transfer recordation;

(ii) The decision on the allocation of allowances from the Conservation and Renewal Energy Reserve;

(iii) The decision on the allocation of allowances under regulations implementing sections 404(e), 405(g)(4), 405(i)(2), and 410(h) of the Act;

(iv) The decision on the allocation of allowances under part 73, subpart F of this chapter;

(v) The decision on the sale or return of allowances and transfer of proceeds under part 73, subpart E; and

(vi) The decision on the deduction of allowances under § 73.35(b) of this chapter.

(3) Under part 74 of this chapter,

(i) The determination of incompleteness of an opt-in permit application;

(ii) The issuance or denial of an opt-in permit and approval or disapproval of the transfer of allowances for the replacement of thermal energy;

(iii) The approval or disapproval of a permit revision to an opt-in permit;

(iv) The decision on the deduction or return of allowances under subpart E of part 74 of this chapter;

(4) Under part 75 of this chapter,

(i) The decision on a petition for approval of an alternative monitoring system;

(ii) The approval or disapproval of a monitoring system certification or recertification;

(iii) The finalization of annual emissions data, including retroactive adjustment based on audit;

(iv) The determination of the percentage of emissions reduction achieved by qualifying Phase I technology; and

(v) The determination on the acceptability of parametric missing data procedures for a unit equipped with add-on controls for sulfur dioxide and nitrogen oxides in accordance with part 75 of this chapter.

(5) Under part 77 of this chapter, the determination of incompleteness of an offset plan and the approval or disapproval of an offset plan under § 77.4 of this chapter and the deduction of allowances under § 77.5(c) of this chapter.

(c) In order to appeal a decision under paragraph (a) of this section, a person shall file a petition for administrative review with the Environmental Appeals Board under § 78.3. The Environmental Appeals Board will, consistent with § 78.6, either:

(1) Issue an order deciding the appeal; or

(2) Where there is a disputed issue of fact material to the contested portions of the decision, refer the proceeding to the Chief Administrative Law Judge, who will designate an Administrative Law Judge to conduct an evidentiary hearing to decide the disputed issue of fact. If the proposed decision is contested or the Environmental Appeals Board decides to review the proposed decision, the Environmental Appeals Board will issue an order deciding the appeal.

(d) Questions arising at any stage of a proceeding that are not addressed in this part will be resolved at the discretion of the Environmental Appeals Board or the Presiding Officer.

[58 FR 3760, Jan. 11, 1993, as amended at 60 FR 17132, Apr. 4, 1995]

§ 78.2 General.

Part 72 of this chapter, including §§ 72.2 (definitions), 72.3 (measurements,

abbreviations, and acronyms), 72.4 (federal authority), 72.5 (State authority), 72.6 (applicability), 72.7 (new units exemption), 72.8 (retired units exemption), 72.9 (standard requirements), 72.10 (availability of information), and 72.11 (computation of time), shall apply to this part.

§ 78.3 Petition for administrative review and request for evidentiary hearing.

(a)(1) The following persons may petition for administrative review of a decision of the Administrator that is made under parts 72, 74, 75, 76, and 77 of this chapter and that is appealable under § 78.1(a) of this part:

(i) The designated representative for the unit covered by the decision;

(ii) The authorized account representative for an account covered by the decision; and

(iii) Any interested person.

(2) The following persons may petition for administrative review of a decision of the Administrator that is made under part 73 of this chapter and that is appealable under § 78.1(a):

(i) The authorized account representative for any Allowance Tracking System account covered by the decision; and

(ii) With regard to the decision on the allocation of allowances from the Conservation and Renewable Energy Reserve, the certifying official whose application is covered by the decision.

(b)(1) Within 60 days following issuance of a decision under § 78.1 of this part by the Administrator, any person under paragraph (a) of this section may file a petition with the Environmental Appeals Board for administrative review of the decision. If no petition for administrative review of a decision under § 78.1 of this part is filed within such period, the decision shall become final agency action.

(2) The petition may include a request for an evidentiary hearing to resolve any disputed issue of material fact concerning the decision.

(3) At the same time that the petition for administrative review is filed, the petitioner shall:

(i) Serve a copy of the petition on the designated representative or authorized account representative under paragraph (a)(1) and (2) of this section (unless the designated representative or authorized account representative is the petitioner) and the Administrator; and

(ii) Mail a notice of the petition to the persons entitled to written notice under § 72.65(b)(1)(ii), (iii), and (iv) of this chapter.

(c) The petition for administrative review under this part shall state with specificity:

(1) Each material factual and legal issue alleged to be in dispute and any such factual issue for which an evidentiary hearing is sought;

(2) A clear and concise statement of the nature and scope of the interest of the petitioner;

(3) A clear and concise brief in support of the petition, explaining why the factual or legal issues are material and, if an evidentiary hearing is requested, why direct and cross-examination of witnesses is necessary to resolve such factual issues;

(4) If an evidentiary hearing is requested, the time estimated to be necessary for an evidentiary hearing;

(5) If an evidentiary hearing is requested, a certified statement that, in the event of an evidentiary hearing, and without cost or expense to any other party, any of the following persons shall be available to appear and testify:

(i) The petitioner; and

(ii) Any officer, director, employee, consultant, or agent of the petitioner.

(6) Specific references to the contested portions of the decision;

(7) Any revised or alternative action of the Administrator sought by the petitioner as necessary to implement the requirements, purposes, or policies of title IV of the Act; and

(8) Identification of any portion of the decision that the petitioner believes should be stayed pending resolution of the appeal.

(d) In no event shall a petition for administrative review be filed, or review be available under this part, with regard to:

(1) A decision under part 73 of this chapter to which the claim of error procedure applies, but for which no claim of error notification was submitted, under part 73 of this chapter;

(2) Any provision or requirement of part 72, 73, 74, 75, 76, or 77 of this chapter, including any standard requirement under § 72.9 of this chapter and any emissions monitoring or reporting requirements under part 75 of this chapter;

(3) The reliance by the Administrator on a certificate of representation submitted by a designated representative or a certification statement submitted by an authorized account representative under the Acid Rain Program; and

(4) Actions of the Administrator under sections 112(r), 113, 114, 120, 301, and 303 of the Act.

[58 FR 3760, Jan. 11, 1993, as amended at 60 FR 17132, Apr. 4, 1995]

§ 78.4 Filings.

(a) All original filings made under this part shall be signed by the person making the filing or by an attorney or authorized representative. Any filings on behalf of owners and operators of an affected unit or affected source shall be signed by the designated representative. Any filings on behalf of persons with an interest in allowances in a general account shall be signed by the authorized account representative. The name, address, telephone number, and facsimile number of the person making the filing shall be provided with the filing.

(b)(1) All data and information referred to, or in any way relied upon, in any filings made under this part shall be included in full and may not be incorporated by reference, unless the data or information is contained in the administrative record for the decision being appealed.

(2) Notwithstanding paragraph (b)(1) of this section, State or federal statutes, regulations, and judicial decisions published in a national reporter system, officially issued EPA documents of general applicability, and any other publicly and generally available reference material may be incorporated by reference. Any person incorporating such materials by reference shall provide copies of the materials as instructed by the Environmental Appeals Board or the Presiding Officer.

(3) If any part of any filing is in a foreign language, it shall be accompanied by an English translation verified by the person making the translation, under oath, to be complete and accurate, together with the name, address, and a brief statement of the qualifications of the person making the translation. Translations filed of material originally produced in a foreign language shall be accompanied by copies of the original material.

(4) Where relevant data or information is contained in a document also containing irrelevant matter, either the irrelevant matter shall be deleted or an index to the relevant portions of the document shall be included in the document.

(c)(1) Failure to comply with the requirements of this section or any other requirement in this part may result in the noncomplying portions of the filing being excluded from consideration. If the Environmental Appeals Board or the Presiding Officer determines on motion by any party or *sua sponte* that a filing fails to meet any requirement of this part, the Environmental Appeals Board or Presiding Officer may return the filing, together with a reference to the applicable requirements on which the determination is based. A person whose filing has been rejected has 7 days, from the date the returned filing is mailed, to correct the filing in conformance with this part and refile it, unless the Environmental Appeals Board or Presiding Officer authorizes a longer time based on good cause shown.

(2) The making of a filing shall not mean or imply that the filing, in fact, meets all applicable requirements, that the filing contains reasonable grounds for the action requested, or that the action requested is in accordance with law.

(d) An original and two copies of any written filing under this part shall be filed with the Environmental Appeals Board unless a proceeding is pending before a Presiding Officer, in which case they shall be filed with the Hearing Clerk (except as provided under § 78.19(d)) of this part.

(e)(1) The party making any filing in a proceeding under this part shall also serve a copy of the filing on each party to the proceeding, or, with regard to a petition for administrative review, on the persons specified in § 78.3(b)(3) of this part.

(2) Every filing made under this part shall be accompanied by a certificate of service citing the date, place, time, and manner of service and the names of the persons served.

(f) The Hearing Clerk will maintain and furnish, to any person upon request, the official service list containing the name, service address, telephone, and facsimile numbers of each party to a proceeding under this part and his or her attorney or duly authorized representative.

(g) Affidavits filed under this part shall be made on personal knowledge and belief, set forth only those facts that are admissible into evidence under § 78.5 of this part, and show affirmatively that the affiant is competent to testify to the matters stated therein.

§ 78.5 Limitation on filing or presenting new evidence and raising new issues.

(a) Where there was an opportunity for public comment, or to submit a claim of error notification, prior to the decision that is subject to appeal, no evidence shall be filed or presented, and no issues raised, in a proceeding under this part that were not filed, presented, or raised during the public comment period, absent a showing of good cause explaining the party's failure to do so during the public comment period or in the claim of error notification. Good cause shall include any instance where the party seeking to file or present new evidence or raise a new issue shows that the evidence could not have reasonably been ascertained, filed, or presented, the issue could not have reasonably been ascertained or raised, or that the materiality of the new evidence or issue could not have reasonably been anticipated, prior to the close of the public comment period or the period for submitting a claim of error notification.

(b) If an evidentiary hearing is granted, no evidence shall be filed or presented on questions of law or policy or on matters not subject to challenge in the evidentiary hearing.

§ 78.6 Action on petition for administrative review.

(a) If no evidentiary hearing concerning the petition for review is requested or is to be held, the Environmental Appeals Board will issue an order under § 78.20(c) of this part.

(b)(1) The Environmental Appeals Board may grant a request for an evidentiary hearing, or schedule an evidentiary hearing *sua sponte,* if the Environmental Appeals Board finds that there are disputed issues of fact material to contested portions of the decision and determines, in its discretion, that an opportunity for direct- and cross-examination of witnesses may be necessary in order to resolve these factual issues.

(2) To the extent the Environmental Appeals Board grants a request for an evidentiary hearing, in whole or in part, it will:

(i) Identify the portions of the decision that have been contested, and the disputed factual issues that have been raised by the petitioner with regard to which the evidentiary hearing has been granted; and

(ii) Refer the disputed factual issues to the Chief Administrative Law Judge for decision and, in its discretion, may also refer all or a portion of the remaining legal, policy, or factual issues to the Chief Administrative Law Judge for decision.

(3)(i) After issues are referred to the Chief Administrative Law Judge, he or she will designate an Administrative Law Judge as Presiding Officer to conduct the evidentiary hearing.

(ii) Notwithstanding paragraph (b)(3)(i) of this section, if all parties waive in writing their right to have an Administrative Law Judge designated as the Presiding Officer, the Administrator may designate a lawyer permanently or temporarily employed by EPA and without any prior connection with the proceeding to serve as Presiding Officer.

§ 78.7 Stays of contested Acid Rain requirements pending appeal.

(a) A contested decision of the Administrator may be stayed, in whole or in part consistent with paragraph (b) of this section, by the Environmental Appeals Board or the Presiding Officer upon request of a party during a proceeding under this part only to the extent necessary to prevent irreparable injury pending final agency action.

(b) The following requirements shall in no event be stayed due to any appeal of a decision of the Administrator and shall be fully effective and enforceable:

(1) The allowance allocations for any year during which the appeal proceeding is pending or is being conducted;

(2) Any standard requirements under §72.9 of this chapter;

(3) The emissions monitoring and reporting requirements applicable to the affected units at an affected source under part 75 of this chapter;

(4) Uncontested provisions of the decision; and

(5) The terms of a certificate of representation submitted by a designated representative under part 72, subpart B of this chapter or a certification statement submitted by an authorized account representative under part 73, subpart C of this chapter.

(c) The permit shield under §72.51 of this chapter shall continue to be in effect.

(d) The Environmental Appeals Board or Presiding Officer shall specify which provisions of the decision shall be stayed.

§78.8 Consolidation and severance of appeals proceedings.

(a) The Environmental Appeals Board or Presiding Officer has the discretion to consolidate, in whole or in part, two or more proceedings under this part whenever it appears that a joint proceeding on any or all of the matters at issue in the proceedings will be in the interest of justice, will expedite or simplify consideration of the issues, and will not prejudice any party. Consolidation of proceedings under this paragraph (a) will not affect the right of any party to raise issues that might have been raised had there been no consolidation.

(b) The Environmental Appeals Board or Presiding Officer has the discretion to sever issues or parties from a proceeding under this part whenever it appears that separate proceedings will be in the interest of justice, will expedite or simplify consideration of the issues, and will not prejudice any party.

§78.9 Notice of the filing of petition for administrative review.

The Administrator will publish in the FEDERAL REGISTER a notice stating that a petition for administrative review of a decision of the Administrator has been filed and specifying any request in the petition for an evidentiary hearing.

§78.10 *Ex parte* **communications during pendency of a hearing.**

(a)(1) No party or interested person outside EPA, representative of a party or interested person, or member of the EPA trial staff shall make, or knowingly cause to be made, to any member of the decisional body an *ex parte* communication on the merits of a proceeding under this part.

(2) No member of the decisional body shall make, or knowingly cause to be made, to any party or interested person outside EPA, representative of a party or interested person, or member of the EPA trial staff, an *ex parte* communication on the merits of any proceeding under this part.

(3) A member of the decisional body who receives, makes, or knowingly causes to be made an *ex parte* communication prohibited by this paragraph shall file with the Environmental Appeals Board (or, if the proceeding is pending before an Administrative Law Judge, with the Hearing Clerk) for inclusion in the record of the proceeding under this part any such written *ex parte* communications and memoranda stating the substance of any such oral *ex parte* communication.

(b) Whenever any member of the decisional body receives an *ex parte* communication made, or knowingly caused to be made by a party or representative of a party to a proceeding under this part, the person presiding over the proceedings then in progress may, to the extent consistent with justice, require the party to show good cause why its claim or interest in the proceedings should not be dismissed, denied, disregarded, or otherwise adversely affected on account of these *ex parte* communications.

(c) The prohibitions of paragraph (a) of this section shall begin to apply upon publication by the Administrator

of the notice of the filing of a petition under § 78.9 of this part. This prohibition terminates on the date of final agency action.

§ 78.11 Intervenors.

(a) Within 30 days after notice is given under § 78.9 of this part that the petition for administrative review has been filed, any person listed in § 78.3(a) of this part may file a motion for leave to intervene in the proceeding. A motion for leave to intervene under this section shall set forth the grounds for the proposed intervention and may respond to the petition for administrative review. Late motions to intervene may be granted only for good cause shown.

(b) The Environmental Appeals Board of Presiding Officer will grant a motion to intervene only upon an express finding that:

(1) The motion to intervene raises matters relevant to the factual or legal issues to be reviewed;

(2) The intervenor consented to be bound by all stipulations previously entered into by the existing parties, and all orders previously issued, in the proceeding; and

(3) The intervention will promote the interests of justice and will not cause undue delay or prejudice to the rights of the existing parties.

§ 78.12 Standard of review.

(a) On appeal of a decision of the Administrator prior to which there was an opportunity for public comment, or to submit a claim of error notification:

(1) Except as provided under paragraph (a)(2) of this section, the petitioner shall have the burden of going forward and of persuasion to show that a finding of fact or conclusion of law underlying the decision is clearly erroneous or that an exercise of discretion or policy determination underlying the decision is arbitrary and capricious or otherwise warrants review.

(2) The owners and operators of the source or unit involved shall have the burden of persuasion that an Acid Rain permit or a written exemption under §§ 72.7 or 72.8 of this chapter was properly issued or should be issued.

(b) On appeal of a decision of the Administrator not covered by paragraph (a) of this section, the Administrator shall have the burden of going forward to show the rational basis for the decision. The petitioner shall have the burden of persuasion to show that a finding of fact or conclusion of law underlying the decision is clearly erroneous or that an exercise of discretion or policy determination underlying the decision is arbitrary and capricious or otherwise warrants review.

§ 78.13 Scheduling orders and pre-hearing conferences.

(a) If a request for an evidentiary hearing is granted, the Presiding Officer will issue an order scheduling the following:

(1) The filing by each party of a narrative statement of position on each factual issue in controversy.

(2) The identification of any witness that a party expects to call and of any written testimony, documents, papers, exhibits, or other materials that a party expects to introduce into evidence. At the request of the Presiding Officer, the party shall include a brief narrative summary of any witness' expected testimony and of any such materials.

(3) The filing of written testimony, in accordance with § 78.14(b) of this part, and other evidence in support of a narrative statement.

(4) The filing of any motions by any party, including motions for the production of documentation, data, or other information material to the disputed facts to be addressed at the hearing.

(b) The Presiding Officer may also, on motion or *sua sponte*, schedule one or more pre-hearing conferences on the record to address any of the following:

(1) Simplification, clarification, amplification, or limitation of the issues.

(2) Admissions and stipulations of facts and determinations of the genuineness of documents.

(3) Objections to the introduction into evidence at the hearing of any written testimony or other submissions proposed by a party; *provided* that at any time before the end of the hearing, any party may make, and the Presiding Officer may consider and rule upon, a motion to strike testimony or

other evidence (other than evidence included in the administrative record (if any) under §72.63 of this chapter) on the grounds of relevance, competency, or materiality.

(4) Taking official notice of any matters.

(5) Grouping of parties with substantially similar interests to eliminate redundant evidence, motions, objections, and briefs.

(6) Such other matters that may expedite the hearing or aid in the disposition of matters in dispute.

(c) The Presiding Officer will issue an order (which may be in the form of a transcript) reciting the actions taken at any pre-hearing conferences, setting the schedule for any hearing, and stating any areas of factual and legal agreement and disagreement and the methods and procedures to be used in developing any evidence.

§78.14 Evidentiary hearing procedure.

(a) If a request for an evidentiary hearing is granted, the Presiding Officer will conduct a fair and impartial hearing on the record, take action to avoid unnecessary delay in the disposition of the proceedings, and maintain order. For theses purposes, the Presiding Officer may:

(1) Administer oaths and affirmations.

(2) Regulate the course of the hearings and prehearing conferences and govern the conduct of participants.

(3) Examine witnesses.

(4) Identify and refer issues for interlocutory decision under §78.19 of this part.

(5) Rule on, admit, exclude, or limit evidence.

(6) Establish the time for filing motions, testimony and other written evidence, and briefs and making other filings.

(7) Rule on motions and other pending procedural matters, including but not limited to motions for summary disposition in accordance with §78.15 of this part.

(8) Order that the hearing be conducted in stages whenever the number of parties is large or the issues are numerous and complex.

(9) Allow direct and cross-examination of witnesses only to the extent the Presiding Officer determines that such direct and cross-examination may be necessary to resolve disputed issues of material fact; *provided* that no direct or cross-examination shall be allowed on questions of law or policy or regarding matters that are not subject to challenge in the evidentiary hearing.

(10) Limit public access to the hearing where necessary to protect confidential business information. The Presiding Officer will provide written notice of the hearing to the parties, and where the hearing will be open to the public, notice in the FEDERAL REGISTER no later than 15 days prior to commencement of the hearings.

(11) Take any other action not inconsistent with the provisions of this part for the maintenance of order at the hearing and for the expeditious, fair and impartial conduct of the proceeding.

(b) All direct and rebuttal testimony at an evidentiary hearing shall be filed in written form, unless, upon motion and good cause shown, the Presiding Officer, in his or her discretion, determines that oral presentation of such evidence on any particular factual issue will materially assist in the efficient resolution of the issue.

(c)(1) The Presiding Officer will admit all evidence that is not irrelevant, immaterial, unduly repetitious, or otherwise unreliable or of little probative value. Evidence relating to settlement that would be excluded in the federal courts under Rule 408 of the Federal Rules of Evidence shall not be admissible.

(2) Whenever any evidence or testimony is excluded by the Presiding Officer as inadmissible, all such evidence will remain a part of the record as an offer of proof. The party seeking the admission of oral testimony may make an offer of proof by means of a brief statement on the record describing the testimony excluded.

(3) When two or more parties have substantially similar interests and positions, the Presiding Officer may limit the number of attorneys or authorized representatives who will be permitted to examine witnesses and to make and argue motions and objections on behalf of those parties.

(4) Rulings of the Presiding Officer on the admissibility of evidence or testimony, the propriety of direct and cross-examination, and other procedural matters will appear in the record of the hearing and control further proceedings unless reversed by the Presiding Officer or as a result of an interlocutory appeal taken under § 78.19 of this part.

(5) All objections shall be made promptly or be deemed waived; *provided* that parties shall be presumed to have taken exception to an adverse ruling. No objection shall be deemed waived by further participation in the hearing.

§ 78.15 Motions in evidentiary hearings.

(a) Any party may make a motion to the Presiding Officer on any matter relating to the evidentiary hearing in accordance with the scheduling orders issued under § 78.13 of this part. All motions shall be in writing and served as provided in § 78.4 of this part, except those made on the record during an oral hearing before the Presiding Officer.

(b) Any party may make a motion for a summary disposition in its favor on any factual issue on the basis that there is no genuine issue of material fact. When a motion for summary disposition is made and supported, any party opposing the motion may not rest upon mere allegations or denials, but must show, by affidavit or by other materials subject to consideration by the Presiding Officer, that there is a genuine issue of material fact.

(c) Within 10 days after a motion made on the record or service of any written motion, any party may file a response to the motion. The time for response may be shortened or extended by the Presiding Officer for good cause shown.

(d) The Presiding Officer may schedule an oral argument and call for the filing of briefs on any motion. The Presiding Officer will rule on the motion within a reasonable time after the date that responses to the motion may be filed under paragraph (c) of this section and that any oral argument or filing of briefs is completed.

(e) If all factual issues are decided by summary disposition prior to the hearing, no hearing will be held and the Presiding Officer will issue a proposed decision under § 78.18 of this part. If a summary disposition is denied or if partial summary disposition is granted, the hearing shall proceed on the remaining issues.

§ 78.16 Record of appeal proceeding.

(a) The proposed decision issued by the Presiding Officer, transcripts of oral hearings or oral arguments, written direct and rebuttal testimony, and any other written materials of any kind filed in the proceeding will be part of the record and will be available to the public in the office of the Hearing Clerk, subject to the requirements of part 2 of this chapter.

(b) Hearings and oral arguments shall be recorded as specified by the Presiding Officer, and thereupon transcribed. After the hearing or oral argument, the reporter will certify and file with the Hearing Clerk.

(1) The original transcript; and

(2) Any exhibits received or offered into evidence at the hearing.

(c) The Hearing Clerk will promptly give written notice to the parties when any transcript is available. Any party that desires a copy of the transcript may obtain a copy upon payment of costs.

(d) The Presiding Officer will allow witnesses, parties, and their counsel or representatives:

(1) Up to 7 days from issuance of the notice under paragraph (c) of this section in order to file written proposed corrections of the transcript necessary to correct errors made in the transcribing; and

(2) Up to 7 days from the submission of the corrections in order to file objections to the proposed corrections.

(e) The Presiding Officer will determine which, if any, corrections should be made to the transcript and incorporate them into the record.

§ 78.17 Proposed findings and conclusions and supporting brief.

Within 45 days after issuance of a notice under § 78.16(c) of this part that the complete transcript of the evidentiary hearing is available, any party may file

with the Hearing Clerk proposed findings and conclusions on the issues referred to the Presiding Officer and a brief in support thereof. Briefs shall contain appropriate references to the record. The Presiding Officer, for good cause shown, may shorten or extend the time for filing and may allow reply briefs.

§78.18 Proposed decision.

(a) The Presiding Officer will review and evaluate the record, including the proposed findings and conclusions and any briefs filed by the parties, and issue a proposed decision on the factual, policy, and legal issues referred by the Environmental Appeals Board for decision under §78.6(b)(2)(ii) of this part, accompanied by findings of fact and proposed conclusions of law, as appropriate, within a reasonable time after the evidentiary hearing is completed. The Hearing Clerk will promptly serve copies of the proposed decision on all parties and on the Environmental Appeals Board.

(b) The proposed decision of the Presiding Officer shall become the final agency action under section 307 of the Act 30 days after service unless within that time:

(1) A party files objections with the Environmental Appeals Board pursuant to §78.20(a) of this part, or

(2) The Environmental Appeals Board *sua sponte* files a notice that it will review the decision under §78.20(b) of this part.

§78.19 Interlocutory appeal.

(a) Interlocutory appeal from orders or rulings of the Presiding Officer made during the course of a proceeding may be taken if the Presiding Officer certifies those orders or rulings to the Environmental Appeals Board for interlocutory appeal on the record. Any requests to the Presiding Officer to certify an interlocutory appeal shall be filed within 10 days of notice of the order or ruling and shall state briefly the grounds for the request.

(b)(1) Within 15 days of the filing of any request for interlocutory appeal, the Presiding Officer may certify an order or ruling for interlocutory appeal to the Environmental Appeals Board if:

(i) The order or ruling involves an important question on which there is substantial ground for difference of opinion, and

(ii) Either:

(A) An immediate appeal of the order or ruling will materially advance the ultimate completion of the proceeding, or

(B) A review after the proceeding is completed will be inadequate or ineffective.

(2) If the Presiding Officer takes no action within 15 days of the filing of a request for interlocutory appeal, the request shall be automatically dismissed without prejudice.

(c) If the Presiding Officer grants certification, the Environmental Appeals Board may accept or decline the interlocutory appeal within 30 days of certification. If the Environmental Appeals Board decides that certification was improperly granted, it will decline to hear the interlocutory appeal. If the Environmental Appeals Board takes no action within 30 days of certification, the interlocutory appeal shall be automatically dismissed without prejudice.

(d) If the Presiding Officer declines to certify an order or ruling for an interlocutory appeal, the order or ruling may be reviewed by the Environmental Appeals Board only upon an appeal of the proposed decision following completion of the proceedings before the Presiding Officer, except when the Environmental Appeals Board determines, upon motion of a party and in exceptional circumstances, that to delay review would not be in the public interest. Such motion shall be filed with Environmental Appeals Board within 5 days after the earlier of automatic dismissal of the request for interlocutory appeal or receipt by the party of notification that the Presiding Officer declines to certify an order or ruling for interlocutory appeal.

(e) The failure of a party to request an interlocutory appeal shall not prevent an appeal of an order or ruling as part of an appeal of a proposed decision under §78.20 of this part.

§ 78.20 Appeal of decision of Administrator or proposed decision to the Environmental Appeals Board.

(a) Within 30 days after the issuance of a proposed decision by a Presiding Officer under this part, any party may appeal any matter set forth in the proposed decision, or any other order or ruling made during the proceeding to which the party objected during the proceeding before the Presiding Officer, by filing an objection with the Environmental Appeals Board. On appeal of an order, ruling, or proposed decision of a Presiding Officer:

(1) The party filing the objection shall have the burden of going forward to show that the order, ruling, or proposed decision is based on a finding of fact or conclusion of law that is clearly erroneous; or a policy determination or exercise of discretion that is arbitrary and capricious or otherwise warrants review; and

(2) The petitioner or the owners and operators shall have the burden of persuasion, as set forth in § 78.12(a) (1) and (2) of this part.

(b) Within 30 days after issuance of a proposed decision of a Presiding Officer, the Environmental Appeals Board may issue *sua sponte* in its discretion a notice of intent to review such proposed decision. The Environmental Appeals Board will serve such notice upon all parties to the proceeding.

(c) Within a reasonable time following the filing of a petition for administrative review of a decision of the Administrator under § 78.3 of this part, or, if any issues raised by such petition are referred to the Presiding Officer, the filing of objections under paragraph (a) of this section or the issuance of a notice of intent to review under paragraph (b) of this section, the Environmental Appeals Board will issue an order affirming, reversing, modifying, or remanding the decision or proposed decision, as appropriate. Prior to issuing this order, the Environmental Appeals Board may provide an opportunity for parties to file additional briefs.

(d) If the Environmental Appeals Board issues an order affirming, reversing, or modifying the decision of the Administrator, then the decision as supplemented or changed by the order, shall be final agency action.

(e) If the Environmental Appeals Board issues an order affirming, reversing, or modifying the proposed decision, the proposed decision, as supplemented or changed by the order, shall be final agency action.

(f) If the Environmental Appeals Board issues an order remanding the proceeding, then final agency action occurs upon completion of the remanded proceeding, including any appeals to the Environmental Appeals Board in the remanded proceeding.

PART 79—REGISTRATION OF FUELS AND FUEL ADDITIVES

Sec.

Subpart A—General Provisions

79.1 Applicability.
79.2 Definitions.
79.3 Availability of information.
79.4 Requirement of registration.
79.5 Periodic reporting requirements.
79.6 Requirement for testing.
79.7 Samples for test purposes.
79.8 Penalties.

Subpart B—Fuel Registration Procedures

79.10 Application for registration by fuel manufacturer.
79.11 Information and assurances to be provided by the fuel manufacturer.
79.12 Determination of noncompliance.
79.13 Registration.
79.14 Termination of registration of fuels.

Subpart C—Additive Registration Procedures

79.20 Application for registration by additive manufacturer.
79.21 Information and assurances to be provided by the additive manufacturer.
79.22 Determination of noncompliance.
79.23 Registration.
79.24 Termination of registration of additives.

Subpart D—Designation of Fuels and Additives

79.30 Scope.
79.31 Additives.
79.32 Motor vehicle gasoline.
79.33 Motor vehicle diesel fuel.

Subpart E—[Reserved]

Subpart F—Testing Requirements for Registration

79.50 Definitions.
79.51 General requirements and provisions.
79.52 Tier 1.
79.53 Tier 2.
79.54 Tier 3.
79.55 Base fuel specifications.
79.56 Fuel and fuel additive grouping system.
79.57 Emission generation.
79.58 Special provisions.
79.59 Reporting requirements.
79.60 Good laboratory practice (GLP) standards for inhalation exposure health effects testing.
79.61 Vehicle emissions inhalation exposure guideline.
79.62 Subchronic toxicity study with specific health effect assessments.
79.63 Fertility assessment/teratology.
79.64 *In vivo* micronucleus assay.
79.65 *In vivo* sister chromatid exchange assay.
79.66 Neuropathology assessment.
79.67 Glial fibrillary acidic protein assay.
79.68 *Salmonella typhimurium* reverse mutation assay.

AUTHORITY: 42 U.S.C. 7414, 7524, 7545 and 7601.

SOURCE: 40 FR 52011, Nov. 7, 1975, unless otherwise noted.

Subpart A—General Provisions

§ 79.1 Applicability.

The regulations of this part apply to the registration of fuels and fuel additives designated by the Administrator, pursuant to section 211 of the Clean Air Act (42 U.S.C. 1857f–6c, as amended by section 9, Pub. L. 91–604).

§ 79.2 Definitions.

As used in this part, all terms not defined herein shall have the meaning given them in the Act:

(a) *Act* means the Clean Air Act (42 U.S.C. 1857 *et seq.*, as amended by Pub. L. 91–604).

(b) *Administrator* means the Administrator of the Environmental Protection Agency.

(c) *Fuel* means any material which is capable of releasing energy or power by combustion or other chemical or physical reaction.

(d) *Fuel manufacturer* means any person who, for sale or introduction into commerce, produces, manufactures, or imports a fuel or causes or directs the alteration of the chemical composition of a bulk fuel, or the mixture of chemical compounds in a bulk fuel, by adding to it an additive, except:

(1) A party (other than a fuel refiner or importer) who adds a quantity of additive(s) amounting to less than 1.0 percent by volume of the resultant additive(s)/fuel mixture is not thereby considered a fuel manufacturer.

(2) A party (other than a fuel refiner or importer) who adds an oxygenate compound to fuel in any otherwise allowable amount is not thereby considered a fuel manufacturer.

(e) *Additive* means any substance, other than one composed solely of carbon and/or hydrogen, that is intentionally added to a fuel named in the designation (including any added to a motor vehicle's fuel system) and that is not intentionally removed prior to sale or use.

(f) *Additive manufacturer* means any person who produces, manufactures, or imports an additive for use as an additive and/or sells or imports for sale such additive under the person's own name.

(g) *Range of concentration* means the highest concentration, the lowest concentration, and the average concentration of an additive in a fuel.

(h) *Chemical composition* means the name and percentage by weight of each compound in an additive and the name and percentage by weight of each element in an additive.

(i) *Chemical structure* means the molecular structure of a compound in an additive.

(j) *Impurity* means any chemical element present in an additive that is not included in the chemical formula or identified in the breakdown by element in the chemical composition of such additive.

(k) *Oxygenate compound* means an oxygen-containing, ashless organic compound, such as an alcohol or ether, which may be used as a fuel or fuel additive.

[40 FR 52011, Nov. 7, 1975, as amended at 59 FR 33092, June 27, 1994; 62 FR 12571, Mar. 17, 1997]

§ 79.3 Availability of information.

The availability to the public of information provided to, or otherwise obtained by, the Administrator under this part shall be governed by part 2 of this chapter except as expressly noted in subpart F of this part.

[59 FR 33092, June 27, 1994]

§ 79.4 Requirement of registration.

(a) *Fuels.* (1) No manufacturer of any fuel designated under this part shall, after the date prescribed for such fuel in this part, sell, offer for sale, or introduce into commerce such fuel unless the Administrator has registered such fuel.

(2) No manufacturer of a registered fuel shall add or direct the addition to it of an additive which he has not previously reported unless he has notified the Administrator of such intended use, including the expected or estimated range of concentration. If necessary to meet an unforeseen production problem, however, a fuel manufacturer may use an additive that he has not previously reported provided that (i) the additive is on the current list of registered additives and (ii) the fuel manufacturer notifies the Administrator within 30 days regarding such unforeseen use and his plans regarding continued use, including the expected or estimated range of concentration.

(3) Any designated fuel that is (i) in a research, development, or test status; (ii) sold to automobile, engine, or component manufacturers for research, development, or test purposes; or (iii) sold to automobile manufacturers for factory fill, and is not in any case offered for commercial sale to the public, shall be exempt from registration.

(4) A domestic fuel manufacturer may purchase and offer for commercial sale foreign-produced fuel containing unidentified additives provided that within 30 days of his offer for sale he notifies the Administrator of the purchase, the source of purchase, the quantity purchased, and summarized results of any tests performed to determine the acceptability of the purchased fuel to the fuel manufacturer.

(b) *Additives.* (1) No manufacturer of any fuel additive designated under this part shall, after the date by which the additive must be registered under this part, sell, offer for sale, or introduce into commerce such additive for use in any type of fuel designated under this part unless the Administrator has registered that additive for use in that type of fuel.

(2) Any designated additive that is either (i) in a research, development, or test status or (ii) sold to petroleum, automobile, engine, or component manufacturers for research, development, or test purposes, and in either case is not offered for commercial sale to the public, shall be exempt from registration.

(3) Process chemicals used by refineries during the refinery process are exempted from the requirement for registration.

(4) If an additive manufacturer prepares for sale only to fuel manufacturers (i) a blend or mixture of two or more registered additives or (ii) a blend or mixture of one or more registered additives with one or more substances containing only carbon and/or hydrogen, he will not be required to register such blend or mixture provided he will, upon request, furnish the Administrator with the names and percentages by weight of all components of such blend or mixture.

[40 FR 52011, Nov. 7, 1975, as amended at 41 FR 21324, May 25, 1976; 59 FR 33092, June 27, 1994]

§ 79.5 Periodic reporting requirements.

(a) *Fuel manufacturers.* (1) For each calendar quarter (January through March, April through June, July through September, October through December) commencing after the date prescribed for a particular fuel in subpart D, fuel manufacturers shall submit to the Administrator a report for each registered fuel showing (i) the range of concentration of each additive reported under § 79.11(a) and (ii) the volume of such fuel produced in the quarter. Reports shall be submitted within 45 days after the close of the reporting period on forms supplied by the Administrator upon request.

(2) Fuel manufacturers shall submit to the Administrator a report annually

for each registered fuel providing additional data and information as specified in §79.31(c) and (d) in the designation of the fuel in subpart D. Reports shall be submitted on or before March 31 for the preceding year or part thereof on forms supplied by the Administrator upon request. If the date prescribed for a particular fuel in subpart D or the later registration of a fuel is between October 1 and December 31, no report will be required for the period to the end of that year.

(b) *Additive manufacturers.* Additive manufacturers shall submit to the Administrator a report annually for each registered additive providing additional data and information as specified in paragraphs (c) and (d) in the designation of the additive in subpart D. Additive manufacturers shall also report annually the volume of each additive produced. Reports shall be submitted on or before March 31 for the preceding year or part thereof on forms supplied by the Administrator upon request. If the date prescribed for a particular additive in subpart D or the later registration of an additive is between October 1 and December 31, no report will be required for the period to the end of that year. These periodic reports shall not, however, be required for any additive that is:

(1) An additive registered under another name,

(2) A blend or mixture of two or more registered additives, or

(3) A blend or mixture of one or more registered additives with one or more substances containing only carbon and/or hydrogen.

§79.6 Requirement for testing.

Provisions regarding testing that is required for registration of a designated fuel or fuel additive are contained in subpart F of this part.

[59 FR 33092, June 27, 1994]

§79.7 Samples for test purposes.

When the Administrator requires for test purposes a fuel or additive which is not readily available in the open market, he may request the manufacturer of such fuel or additive to furnish a sample in a reasonable quantity. The fuel or additive manufacturer shall comply with such request within 30 days.

§79.8 Penalties.

Any person who violates section 211(a) of the Act or who fails to furnish any information or conduct any tests required under this part shall be liable to the United States for a civil penalty of not more than the sum of $25,000 for every day of such violation and the amount of economic benefit or savings resulting from the violation. Civil penalties shall be assessed in accordance with paragraphs (b) and (c) of section 205 of the Act.

[58 FR 65554, Dec. 15, 1993]

Subpart B—Fuel Registration Procedures

§79.10 Application for registration by fuel manufacturer.

Any manufacturer of a designated fuel who wishes to register that fuel shall submit an application for registration including all of the information set forth in §79.11. If the manufacturer produces more than one grade or brand of a designated fuel, a manufacturer may include more than one grade or brand in a single application, provided that the application includes all information required for registration of each such grade or brand by this part. Each application shall be signed by the fuel manufacturer and shall be submitted on such forms as the Administrator will supply on request.

[59 FR 33092, June 27, 1994]

§79.11 Information and assurances to be provided by the fuel manufacturer.

Each application for registration submitted by the manufacturer of a designated fuel shall include the following:

(a) The commercial identifying name of each additive that will or may be used in a designated fuel subsequent to the date prescribed for such fuel in subpart D;

(b) The name of the additive manufacturer of each additive named;

(c) The range of concentration of each additive named, as follows:

(1) In the case of an additive which has been or is being used in the designated fuel, the range during any 3-month or longer period prior to the date of submission;

(2) In the case of an additive which has not been used in the designated fuel, the expected or estimated range;

(d) The purpose-in-use of each additive named;

(e) The description (or identification, in the case of a generally accepted method) of a suitable analytical technique (if one is known) that can be used to detect the presence of each named additive in the designated fuel and/or to measure its concentration therein;

(f) Such other data and information as are specified in the designation of the fuel in subpart D;

(g) Assurances that the fuel manufacturer will notify the Administrator in writing and within a reasonable time of any change in:

(1) The name of any additive previously reported;

(2) The name of the manufacturer of any additive being used;

(3) The purpose-in-use of any additive;

(4) Information submitted pursuant to paragraph (e) of this section;

(h) Assurances that the fuel manufacturer will not represent, directly or indirectly, in any notice, circular, letter, or other written communication, or any written, oral, or pictorial notice or other announcement in any publication or by radio or television, that registration of the fuel constitutes endorsement, certification, or approval by any agency of the United States;

(i) The manufacturer of any fuel which will be sold, offered for sale, or introduced into commerce for use in motor vehicles manufactured after model year 1974 shall demonstrate that the fuel is substantially similar to any fuel utilized in the certification of any 1975 or subsequent model year vehicle or engine, or that the manufacturer has obtained a waiver under 42 U.S.C. 7545(f)(4); and

(j) The manufacturer shall submit, or shall reference prior submissions, including all of the test data and other information required prior to registration of the fuel by the provisions of subpart F of this part.

[40 FR 52011, Nov. 7, 1975, as amended at 59 FR 33092, June 27, 1994]

§ 79.12 Determination of noncompliance.

If the Administrator determines that an applicant for registration of a designated fuel has failed to submit all of the information required by § 79.11, or determines within the applicable period provided for Agency review that the applicant has not satisfactorily completed any testing which is required prior to registration of the fuel by any provision of subpart F of this part, he shall return the application to the manufacturer, along with an explanation of all deficiencies in the required information.

[59 FR 33093, June 27, 1994]

§ 79.13 Registration.

(a) If the Administrator determines that a manufacturer has submitted an application for registration of a designated fuel which includes all of the information and assurances required by § 79.11 and has satisfactorily completed all of the testing required by subpart F of this part, the Administrator shall promptly register the fuel and notify the fuel manufacturer of such registration.

(b) The Administrator shall maintain a list of registered fuels, which shall be available to the public upon request.

[40 FR 52011, Nov. 7, 1975, as amended at 41 FR 21324, May 25, 1976; 59 FR 33093, June 27, 1994]

§ 79.14 Termination of registration of fuels.

Registration may be terminated by the Administrator if the fuel manufacturer requests such termination in writing.

Subpart C—Additive Registration Procedures

§ 79.20 Application for registration by additive manufacturer.

Any manufacturer of a designated fuel additive who wishes to register that additive shall submit an application for registration including all of

the information set forth in §79.21. Each application shall be signed by the fuel additive manufacturer and shall be submitted on such forms as the Administrator will supply on request.

[59 FR 33093, June 27, 1994]

§79.21 Information and assurances to be provided by the additive manufacturer.

Each application for registration submitted by the manufacturer of a designated fuel additive shall include the following:

(a) The chemical composition of the additive with the methods of analysis identified, except that

(1) If the chemical composition is not known, full disclosure of the chemical process of manufacture will be accepted in lieu thereof;

(2) In the case of an additive for engine oil, only the name, percentage by weight, and method of analysis of each element in the additive are required provided, however, that a percentage figure combining the percentages of carbon, hydrogen, and/or oxygen may be provided unless the breakdown into percentages for these individual elements is already known to the registrant.

(3) In the case of a purchased component, only the name, manufacturer, and percent by weight of such purchased component are required if the manufacturer of the component will, upon request, furnish the Administrator with the chemical composition thereof.

(b) The chemical structure of each compound in the additive if such structure is known and is not adequately specified by the name given under ''chemical composition.'' Nominal identification is adequate if mixed isomers are present.

(c) The description (or identification, in the case of a generally accepted method) of a suitable analytical technique (if one is known) that can be used to detect the presence of the additive in any fuel named in the designation and/or to measure its concentration therein.

(d) The specific types of fuels designated under §79.32 for which the fuel additive will be sold, offered for sale, or introduced into commerce, and the fuel additive manufacturer's recommended range of concentration and purpose-in-use for each such type of fuel.

(e) Such other data and information as are specified in the designation of the additive in subpart D.

(f) Assurances that any change in information submitted pursuant to (1) paragraphs (a), (b), (c), and (d) of this section will be provided to the Administrator in writing within 30 days of such change; and (2) paragraph (e) of this section as provided in §79.5(b).

(g) Assurances that the additive manufacturer will not represent, directly or indirectly, in any notice, circular, letter, or other written communication or any written, oral, or pictorial notice or other announcement in any publication or by radio or television, that registration of the additive constitutes endorsement, certification, or approval by any agency of the United States.

(h) The manufacturer of any fuel additive which will be sold, offered for sale, or introduced into commerce for use in any type of fuel intended for use in motor vehicles manufactured after model year 1974 shall demonstrate that the fuel additive, when used at the recommended range of concentration, is substantially similar to any fuel additive included in a fuel utilized in the certification of any 1975 or subsequent model year vehicle or engine, or that the manufacturer has obtained a waiver under 42 U.S.C. 7545(f)(4).

(i) The manufacturer shall submit, or shall reference prior submissions, including all of the test data and other information required prior to registration of the fuel additive by the provisions of subpart F of this part.

[40 FR 52011, Nov. 7, 1975, as amended at 41 FR 21324, May 25, 1976; 59 FR 33093, June 27, 1994]

§79.22 Determination of noncompliance.

If the Administrator determines that an applicant for registration of a designated fuel additive has failed to submit all of the information required by §79.21, or determines within the applicable period provided for Agency review that the applicant has not satisfactorily completed any testing which is required prior to registration of the

fuel additive by any provision of subpart F of this part, he shall return the application to the manufacturer, along with an explanation of all deficiencies in the required information.

[59 FR 33093, June 27, 1994]

§ 79.23 Registration.

(a) If the Administrator determines that a manufacturer has submitted an application for registration of a designated fuel additive which includes all of the information and assurances required by § 79.21 and has satisfactorily completed all of the testing required by subpart F of this part, the Administrator shall promptly register the fuel additive and notify the fuel manufacturer of such registration.

(b) The Administrator shall maintain a list of registered additives, which shall be available to the public upon request.

[40 FR 52011, Nov. 7, 1975, as amended at 41 FR 21324, May 25, 1976; 59 FR 33093, June 27, 1994]

§ 79.24 Termination of registration of additives.

Registration may be terminated by the Administrator if the additive manufacturer requests such termination in writing.

Subpart D—Designation of Fuels and Additives

§ 79.30 Scope.

Fuels and additives designated and dates prescribed by the Administrator for the registration of such fuels and additives, pursuant to section 211 of the Act, are listed in this subpart. In addition, specific informational requirements under §§ 79.11(f) and 79.21(e) are set forth for each designated fuel or additive. Additional fuels and/or additives may be designated and pertinent dates and additional specific informational requirements prescribed as the Administrator deems advisable.

§ 79.31 Additives.

(a) All additives produced or sold for use in motor vehicle gasoline and/or motor vehicle diesel fuel are hereby designated. The Act defines the term ''motor vehicle'' to mean any self-propelled vehicle designed for transporting persons or property on a street or highway. For purposes of this registration, however, additives specifically manufactured and marketed for use in motorcycle fuels are excluded.

(b) All designated additives must be registered by July 7, 1976.

(c) In accordance with §§ 79.5(b) and 79.21(e), and to the extent such information is known to the additive manufacturer as a result of testing conducted for reasons other than additive registration or reporting purposes, the additive manufacturer shall furnish the highest, lowest, and average values of the impurities in each designated additive, if greater than 0.1 percent by weight. The methods of analysis in making the determinations shall also be given.

(d) In accordance with §§ 79.5(b) and 79.21(e), and to the extent such information is known to the additive manufacturer, he shall furnish summaries of any information developed by or specifically for him concerning the following items:

(1) Mechanisms of action of the additive;

(2) Reactions between the additive and the fuels listed in paragraph (a) of this section;

(3) Identification and measurement of the emission products of the additive when used in the fuels listed in paragraph (a) of this section;

(4) Effects of the additive on all emissions;

(5) Toxicity and any other public health or welfare effects of the emission products of the additive;

(6) Effects of the emission products of the additive on the performance of emission control devices/systems. Such submissions shall be accompanied by a description of the test procedures used in obtaining the information. Information will be considered to be known to the additive manufacturer if a report thereon has been prepared and circulated or distributed outside the research department or division.

(Secs. 211, 301(a), Clean Air Act as amended (40 U.S.C. 7545, 7601(a)))

[40 FR 52011, Nov. 7, 1975, as amended at 41 FR 21324, May 25, 1976; 43 FR 28490, June 30, 1978; 59 FR 33093, June 27, 1994]

§79.32 Motor vehicle gasoline.

(a) The following fuels commonly or commercially known or sold as motor vehicle gasoline are hereby individually designated:

(1) Motor vehicle gasoline, unleaded—motor vehicle gasoline that contains no more than 0.05 gram of lead per gallon;

(2) Motor vehicle gasoline, leaded, premium—motor vehicle gasoline that contains more than 0.05 gram of lead per gallon and is sold as ''premium;''

(3) Motor vehicle gasoline, leaded, non-premium—motor vehicle gasoline that contains more than 0.05 gram of lead per gallon but is not sold as ''premium.''

The Act defines the term ''motor vehicle'' to mean any self-propelled vehicle designed for transporting persons or property on a street or highway. For purposes of this registration, however, gasoline specifically blended and marketed for motorcycles is excluded.

(b) All designated motor vehicle gasolines must be registered by September 7, 1976.

(c) In accordance with §§79.5(a)(2) and 79.11(f), and to the extent such information is known to the fuel manufacturer as a result of testing conducted for reasons other than fuel registration or reporting purposes, the fuel manufacturer shall furnish the data listed below. The highest, lowest, and average values of the listed characteristics/properties are to be reported. For initial registration, data shall be given for any 3-month or longer period prior to the date of submission. For annual reports thereafter, data shall be for the calendar year, except that if the first required annual report covers a period of less than a year, the data may be for such shorter period.

(1) Hydrocarbon composition (aromatic content, olefin content, saturate content), with the methods of analysis identified;

(2) Polynuclear organic material content, sulfur content, and trace element content, with the methods of analysis identified;

(3) Reid vapor pressure;

(4) Distillation temperatures (10 percent point, end point);

(5) Research octane number and motor octane number.

(d) In accordance with §§79.5(a)(2) and 79.11(f), and to the extent such information is known to the fuel manufacturer, he shall furnish summaries of any information developed by or specifically for him concerning the following items:

(1) Mechanisms of action of each additive he reports;

(2) Reactions between such additives and motor vehicle gasoline;

(3) Identification and measurement of the emission products of such additives when used in motor vehicle gasoline;

(4) Effects of such additives on all emissions;

(5) Toxicity and any other public health or welfare effects of the emission products of such additives;

(6) Effects of the emission products of such additives on the performance of emission control devices/systems. Such submissions shall be accompanied by a description of the test procedures used in obtaining the information. Information will be considered to be known to the fuel manufacturer if a report thereon has been prepared and circulated or distributed outside the research department or division.

[40 FR 52011, Nov. 7, 1975, as amended at 41 FR 21324, May 25, 1976]

§79.33 Motor vehicle diesel fuel.

(a) The following fuels commonly or commercially known or sold as motor vehicle diesel fuel are hereby individually designated:

(1) Motor vehicle diesel fuel, grade 1–D;

(2) Motor vehicle diesel fuel, grade 2–D.

The Act defines the term ''motor vehicle'' to mean any self-propelled vehicle designed for transporting persons or property on a street or highway.

(b) All designated motor vehicle diesel fuels must be registered within 12 months after promulgation of this part.

(c) In accordance with §§79.5(a)(2) and 79.11(f), and to the extent such information is known to the fuel manufacturer

as a result of testing conducted for reasons other than fuel registration or reporting purposes, the fuel manufacturer shall furnish the data listed below. The highest, lowest, and average values of the listed characteristics/properties are to be reported. For initial registration, data shall be given for any 3-month or longer period prior to the date of submission. For annual reports thereafter, data shall be for the calendar year, except that if the first required annual report covers a period of less than a year, the data may be for such shorter period.

(1) Hydrocarbon composition (aromatic content, olefin content, saturate content), with the methods of analysis identified;

(2) Polynuclear organic material content, sulfur content, and trace element content, with the methods of analysis identified;

(3) Distillation temperatures (90 percent point, end point);

(4) Cetane number or cetane index;

(d) In accordance with §§ 79.5(a)(2) and 79.11(f), and to the extent such information is known to the fuel manufacturer, he shall furnish summaries of any information developed by or specifically for him concerning the following items:

(1) Mechanisms of action of each additive he reports;

(2) Reactions between such additives and motor vehicle diesel fuel;

(3) Identification and measurement of the emission products of such additives when used in motor vehicle diesel fuel;

(4) Effects of such additives on all emissions;

(5) Toxicity and any other public health or welfare effects of the emission products of such additives.

Such submission shall be accompanied by a description of the test procedures used in obtaining the information. Information will be considered to be known to the fuel manufacturer if a report thereon has been prepared and circulated or distributed outside the research department or division.

Subpart E—[Reserved]

Subpart F—Testing Requirements for Registration

SOURCE: 59 FR 33093, June 27, 1994, unless otherwise noted.

§ 79.50 Definitions.

The definitions listed in this section apply only to subpart F of this part.

Additive/base fuel mixture means the mixture resulting when a fuel additive is added in specified proportion to the base fuel of the fuel family to which the additive belongs.

Aerosol additive means a chemical mixture in aerosol form generally used as a motor vehicle engine starting aid or carburetor cleaner and not recommended to be placed in the fuel tank.

Aftermarket fuel additive means a product which is added by the end-user directly to fuel in a motor vehicle or engine to modify the performance or other characteristics of the fuel, the engine, or its emissions.

Atypical element means any chemical element found in a fuel or additive product which is not allowed in the baseline category of the associated fuel family, and an ''atypical fuel or fuel additive'' is a product which contains such an atypical element.

Base fuel means a generic fuel formulated from a set of specifications to be representative of a particular fuel family.

Basic emissions means the total hydrocarbons, carbon monoxide, oxides of nitrogen, and particulates occurring in motor vehicle or engine emissions.

Bulk fuel additive means a product which is added to fuel at the refinery as part of the original blending stream or after the fuel is transported from the refinery but before the fuel is purchased for introduction into the fuel tank of a motor vehicle.

Emission characterization means the determination of the chemical composition of emissions.

Emission generation means the operation of a vehicle or engine or the vaporization of a fuel or additive/fuel mixture under controlled conditions

for the purpose of creating emissions to be used for testing purposes.

Emission sampling means the removal of a fraction of collected emissions for testing purposes.

Emission speciation means the analysis of vehicle or engine emissions to determine the individual chemical compounds which comprise those emissions.

Engine Dynamometer Schedule (EDS) means the transient engine speed versus torque time sequence commonly used in heavy-duty engine evaluation. The EDS for heavy-duty diesel engines is specified in 40 CFR part 86, appendix I(f)(2).

Evaporative Emission Generator (EEG) means a fuel tank or vessel to which heat is applied to cause a portion of the fuel to evaporate at a desired rate.

Evaporative emissions means chemical compounds emitted into the atmosphere by vaporization of contents of a fuel or additive/fuel mixture.

Evaporative fuel means a fuel which has a Reid Vapor Pressure (RVP, pursuant to 40 CFR part 80, appendix ''E'') of 2.0 pounds per square inch or greater and is not supplied to motor vehicle engines by way of sealed containment and delivery systems.

Evaporative fuel additive means a fuel additive which, when mixed with its specified base fuel, causes an increase in the RVP of the base fuel by 0.4 psi or more relative to the RVP of the base fuel alone and results in an additive/base fuel mixture whose RVP is 2.0 psi, or greater. Excluded from this definition are fuel additives used with fuels which are supplied to motor vehicle engines by way of sealed containment and delivery systems.

Federal Test Procedure (FTP) means the body of exhaust and evaporative emissions test procedures described in 40 CFR 86 for the certification of new motor vehicles to Federal motor vehicle emissions standards.

Fuel family means a set of fuels and fuel additives which share basic chemical and physical formulation characteristics and can be used in the same engine or vehicle.

Manufacturer means a person who is a fuel manufacturer or additive manufacturer as defined in § 79.2 (d) and (f).

Nitrated polycyclic aromatic hydrocarbons (NPAH) means the class of compounds whose molecular structure includes two or more aromatic rings and contains one or more nitrogen substitutions.

Non-catalyzed emissions means exhaust emissions not subject to an effective aftertreatment device such as a functional catalyst or particulate trap.

Oxygenate compound means an oxygen-containing, ashless organic compound, such as an alcohol or ether, which may be used as a fuel or fuel additive.

Polycyclic aromatic hydrocarbons (PAH) means the class of hydrocarbon compounds whose molecular structure includes two or more aromatic rings.

Relabeled additive means a fuel additive which is registered by its original manufacturer with EPA and is also registered and sold, unchanged in composition, under a different label and/or by a different entity.

Semi-volatile organic compounds means that fraction of gaseous combustion emissions which consists of compounds with greater than twelve carbon atoms and can be trapped in sorbent polymer resins.

Urban Dynamometer Driving Schedule (UDDS) means the 1372 second transient speed driving sequence used by EPA to simulate typical urban driving. The UDDS for light-duty vehicles is described in 40 CFR part 86, appendix I(a).

Vapor phase means the gaseous fraction of combustion emissions.

Vehicle classes/subclasses means the divisions of vehicle groups within a vehicle type, including light-duty vehicles, light-duty trucks, and heavy-duty vehicles as specified in 40 CFR part 86.

Vehicle type means the divisions of motor vehicles according to combustion cycle and intended fuel class, including, but not necessarily limited to, Otto cycle gasoline-fueled vehicles, Otto cycle methanol-fueled vehicles, diesel cycle diesel-fueled vehicles, and diesel cycle methanol-fueled vehicles.

Whole emissions means all components of unfiltered combustion emissions or evaporative emissions.

§ 79.51 General requirements and provisions.

(a) *Overview of requirements.* (1) All manufacturers of fuels and fuel additives that are designated for registration under this part are required to comply with the requirements of subpart F of this part either on an individual basis or as a participant in a group of manufacturers of the same or similar fuels and fuel additives, as defined in § 79.56. If manufacturers elect to comply by participation in a group, each manufacturer continues to be individually subject to the requirements of subpart F of this part, and responsible for testing under this subpart. Each manufacturer, subject to the provisions for group applications in § 79.51(b) and the special provisions in § 79.58, shall submit all Tier 1 and Tier 2 information required by §§ 79.52, 79.53 and 79.59 for each fuel or additive, except that the Tier 1 emission characterization requirements in § 79.52(b) and/or the Tier 2 testing requirements in § 79.53 may be satisfied by adequate existing information pursuant to the Tier 1 literature search requirements in § 79.52(d). The adequacy of existing information to serve in compliance with specific Tier 1 and/or Tier 2 requirements shall be determined according to the criteria and procedures specified in §§ 79.52(b) and 79.53 (c) and (d). In all cases, EPA reserves the right to require, based upon the information contained in the application or any other information available to the Agency, that manufacturers conduct additional testing of any fuel or additive (or fuel/additive group) if EPA determines that there is inadequate information upon which to base regulatory decisions for such product(s). In any case where EPA determines that the requirements of Tiers 1 and 2 have been satisfied but that further testing is required, the provisions of Tier 3 (§ 79.54) shall apply.

(2) Laboratory facilities shall perform testing in compliance with Good Laboratory Practice (GLP) requirements as those requirements apply to inhalation toxicology studies. All studies shall be monitored by the facilities' Quality Assurance units (as specified in § 79.60).

(b) *Group Applications.* Subject to the provisions of § 79.56 (a) through (c), EPA will consider any testing requirements of this subpart to have been met for any fuel or fuel additive when a fuel or fuel additive which meets the criteria for inclusion in the same group as the subject fuel or fuel additive has met that testing requirement, provided that all fuels and additives must be individually registered as described in § 79.59(b). For purposes of this subpart, a determination of which group contains a particular fuel or additive will be made pursuant to the provisions of § 79.56 (d) and (e). Nothing in this subsection (b) shall be deemed to require a manufacturer to rely on another manufacturer's testing.

(c) *Application Procedures and Dates.* Each application submitted in compliance with this subpart shall be signed by the manufacturer of the designated fuel or additive, or by the manufacturer's agent, and shall be submitted to the address and in the format prescribed in § 79.59. A manufacturer who chooses to comply as part of a group pursuant to § 79.56 shall be covered by the group's joint application. Subject to any modifications pursuant to the special provisions in §§ 79.51(f) or 79.58, the schedule for compliance with the requirements of this subpart is as follows:

(1) *Fuels and fuel additives with existing registrations.* (i) The manufacturer of a fuel or fuel additive product which, pursuant to subpart B or C of this part, is registered as of May 27, 1994 must submit the additional basic registration data specified in § 79.59(b) before November 28, 1994.

(ii) Except as provided in paragraphs (c)(1)(vi) and (vii) of this section, the manufacturer of such products must also satisfy the requirements and time schedules in either of the following paragraphs (c)(1)(ii) (A) or (B) of this section:

(A) No later than May 27, 1997, all applicable Tier 1 and Tier 2 requirements must be submitted to EPA, pursuant to §§ 79.52, 79.53, and 79.59; or

(B) No later than May 27, 1997, all applicable Tier 1 requirements (pursuant to §§ 79.52 and 79.59), plus evidence of a contract with a qualified laboratory (or

other suitable arrangement) for completion of all applicable Tier 2 requirements, must be submitted to EPA. For this purpose, a qualified laboratory is one which can demonstrate the capabilities and credentials specified in § 79.53(c)(1). In addition, by May 26, 2000, all applicable Tier 2 requirements (pursuant to §§ 79.53 and 79.59) must be submitted to EPA.

(iii) In the case of such fuels and fuel additives which, pursuant to applicable special provisions in § 79.58, are not subject to Tier 2 requirements, all other requirements (except Tier 3) must be submitted to EPA before May 27, 1997.

(iv) In the event that Tier 3 testing is also required (under § 79.54), EPA shall determine an appropriate timeline for completion of the additional requirements and shall communicate this schedule to the manufacturer according to the provisions of § 79.54(b).

(v) The manufacturer may at any time modify an existing fuel registration by submitting a request to EPA to add or delete a bulk additive to the existing registration information for such fuel product, provided that any additional additive must be registered by EPA for use in the specific fuel family to which the fuel product belongs. However, the addition or deletion of a bulk additive to a fuel registration may effect the grouping of such registered fuel under the criteria of § 79.56, and thus may effect the testing responsibilities of the fuel manufacturer under this subpart.

(vi) In regard to atypical fuels or additives in the gasoline and diesel fuel families (pursuant to the specifications in § 79.56(e)(4)(iii)(A) (*1*) and (*2*)):

(A) All applicable Tier 1 requirements, pursuant to §§ 79.52 and 79.59, must be submitted to EPA by May 27, 1997.

(B) Tier 2 requirements, pursuant to §§ 79.53 and 79.59, must be satisfied according to the deadlines in either of the following paragraphs (c)(1)(vi)(B) (*1*) or (*2*) of this section:

(*1*) All applicable Tier 2 requirements shall be submitted to EPA by November 27, 1998; or

(*2*) Evidence of a contract with a qualified laboratory (or other suitable arrangement) for completion of all applicable Tier 2 requirements shall be submitted to EPA by November 27, 1998. For this purpose, a qualified laboratory is one which can demonstrate the capabilities and credentials specified in § 79.53(c)(1). In addition, all applicable Tier 2 requirements must be submitted to EPA by November 27, 2001.

(vii) In regard to nonbaseline diesel products formulated with mixed alkyl esters of plant and/or animal origin (i.e., ''biodiesel'' fuels, pursuant to § 79.56(e)(4)(ii)(B)(*2*)):

(A) All applicable Tier 1 requirements, pursuant to §§ 79.52 and 79.59, must be submitted to EPA by March 17, 1998.

(B) Tier 2 requirements, pursuant to §§ 79.53 and 79.59, must be satisfied according to the deadlines in either of the following paragraphs (c)(1)(vii)(B) (*1*) or (*2*) of this section:

(*1*) All applicable Tier 2 requirements shall be submitted to EPA by March 17, 1998; or

(*2*) Evidence of a contract with a qualified laboratory (or other suitable arrangement) for completion of all applicable Tier 2 requirements shall be submitted to EPA by March 17, 1998. For this purpose, a qualified laboratory is one which can demonstrate the capabilities and credentials specified in § 79.53(c)(1). In addition, all applicable Tier 2 requirements must be submitted to EPA by May 27, 2000.

(2) *Registrable fuels and fuel additives.* (i) A fuel product which is not registered pursuant to subpart B of this part as of May 27, 1994 shall be considered registrable if, under the criteria established by § 79.56, the fuel can be enrolled in the same fuel/additive group with one or more currently registered fuels. A fuel additive product which is not registered for a specific type of fuel pursuant to subpart C of this part as of May 27, 1994 shall be considered registrable for that type of fuel if, under the criteria established by § 79.56, the fuel/additive mixture resulting from use of the additive product in the specific type of fuel can be enrolled in the same fuel/additive group with one or more currently registered fuels or bulk fuel additives. For the purpose of this determination, currently registered fuels and bulk additives are

those with existing registrations as of the date on which EPA receives the basic registration data (pursuant to § 79.59(b)) for the product in question.

(ii) A manufacturer seeking to register under subpart B of this part a fuel product which is deemed registrable under this section, or to register under subpart C of this part a fuel additive product for a specific type of fuel for which it is deemed registrable under this section, shall submit the basic registration data (pursuant to § 79.59(b)) for that product as part of the application for registration. If the Administrator determines that the product is registrable under this section, then the Administrator shall promptly register the product, provided that the applicant has satisfied all of the other requirements for registration under subpart B or subpart C of this part, and contingent upon satisfactory submission of required information under paragraph (c)(2)(iii) of this section.

(iii) Registration of a registrable fuel or additive shall be subject to the same requirements and compliance schedule as specified in paragraph (c)(1) of this section for existing fuels and fuel additives. Accordingly, manufacturers of registrable fuels or additives may be granted and may retain registration for such products only if any applicable and due Tier 1, 2, and 3 requirements have also been satisfied by either the manufacturer of the product or the fuel/additive group to which the product belongs.

(3) *New fuels and fuel additives.* A fuel product shall be considered new if it is not registered pursuant to subpart B of this part as of May 27, 1994 and if, under the criteria established by § 79.56, it cannot be enrolled in the same fuel/additive group with one or more currently registered fuels. A fuel additive product shall be considered new with respect to a specific type of fuel if it is not expressly registered for that type of fuel pursuant to subpart C of this part as of May 27, 1994 and if, under the criteria established by § 79.56, the fuel/additive mixture resulting from use of the additive product in the specific type of fuel cannot be enrolled in the same fuel/additive group with one or more currently registered fuels or bulk fuel additives. For the purpose of this determination, currently registered fuels and bulk additives are those with existing registrations as of the date on which EPA receives the basic registration data (pursuant to § 79.59(b)) for the product in question. For such new product, the manufacturer must satisfactorily complete all applicable Tier 1 and Tier 2 requirements, followed by any Tier 3 testing which the Administrator may require, before registration will be granted.

(d) *Notifications.* Upon receipt of a manufacturer's (or group's) submittal in compliance with the requirements of this subpart, EPA will notify such manufacturer (or group) that the application has been received and what, if any, information, testing, or retesting is necessary to bring the application into compliance with the requirements of this subpart. EPA intends to provide such notification of receipt in a timely manner for each such application.

(1) *Registered fuel and fuel additive notification.* (i) The manufacturer of a registered fuel or fuel additive product who is notified that the submittal for such product contains adequate information pursuant to the Tier 1 and Tier 2 testing and reporting requirements (§§ 79.52, 79.53, and 79.59 (a) through (c)) may continue to sell, offer for sale, or introduce into commerce the registered product as permitted by the existing registration for the product under § 79.4.

(ii) If the manufacturer of a registered fuel or fuel additive product is notified that testing or retesting is necessary to bring the Tier 1 and/or Tier 2 submittal into compliance, the continued sale or importation of the product shall be conditional upon satisfactorily completing the requirements within the time frame specified in paragraph (c)(1) of this section.

(iii) EPA intends to notify the manufacturer of the adequacy of the submitted data within two years of EPA's receipt of such data. However, EPA retains the right to require that adequate data be submitted to EPA if, upon subsequent review, EPA finds that the original Tier 1 and/or Tier 2 submittal is not consistent with the requirements of this subpart. If EPA does not notify the manufacturer of the adequacy of the Tier 1 and/or Tier 2 data

within two years, EPA will not hold the manufacturer liable for penalties for violating this rule for the period beginning when the data was due until the time EPA notifies the manufacturer of the violation.

(iv) If the manufacturer of a registered fuel or fuel additive product is notified (pursuant to § 79.54(b)) that Tier 3 testing is required for its product, then the manufacturer may continue to sell, offer for sale, introduce into commerce the registered product as permitted by the existing registration for the product under § 79.4. However, if the manufacturer fails to complete the specified Tier 3 requirements within the specified time, the registration of the product will be subject to cancellation under § 79.51(f)(6).

(v) EPA retains the right to require additional Tier 3 testing pursuant to the procedures in § 79.54.

(2) *New fuel and fuel additive notification.* (i) Within six months following its receipt of the Tier 1 and Tier 2 submittal for a new product (as defined in paragraph (c)(3) of this section), EPA shall notify the manufacturer of the adequacy of such submittal in compliance with the requirements of §§ 79.52, 79.53, and 79.59 (a) through (c).

(A) If EPA notifies the manufacturer that testing, retesting, or additional information is necessary to bring the Tier 1 and Tier 2 submittal into compliance, the manufacturer shall remedy all inadequacies and provide Tier 3 data, if required, before EPA shall consider the requirements for registration to have been met for the product in question.

(B) If EPA does not notify the manufacturer of the adequacy of the Tier 1 and Tier 2 submittal within six months following the submittal, the manufacturer shall be deemed to have satisfactorily completed Tiers 1 and 2.

(ii) Within six months of the date on which EPA notifies the manufacturer of satisfactory completion of Tiers 1 and 2 for a new product, or within one year of the submittal of the Tier 1 and Tier 2 data (whichever is earlier), EPA shall determine whether additional testing is currently needed under the provisions of Tier 3 and, pursuant to § 79.54(b), shall notify the manufacturer of its determination.

(A) If the manufacturer of a new fuel or fuel additive product is notified that Tier 3 testing is required for such product, then EPA shall have the authority to withhold registration until the specified Tier 3 requirements have been satisfactorily completed. EPA shall determine whether the Tier 3 requirements have been met, and shall notify the manufacturer of this determination, within one year of receiving the manufacturer's Tier 3 submittal.

(B) If EPA does not notify the manufacturer of potential Tier 3 requirements within the prescribed timeframe, then additional testing at the Tier 3 level is deemed currently unnecessary and the manufacturer shall be considered to have complied with all current registration requirements for the new fuel or additive product.

(iii) Upon completion of all current Tier 1, Tier 2, and Tier 3 requirements, and submission of an application for registration which includes all of the information and assurances required by § 79.11 or § 79.21, the registration of the new fuel or additive shall be granted, and the registrant may then sell, offer for sale, or introduce into commerce the registered product as permitted by § 79.4.

(iv) Once the new product becomes registered, EPA reserves the right to require additional Tier 3 testing pursuant to the procedures specified in § 79.54.

(e) *Inspection of a testing facility.* (1) A testing facility, whether engaged in emissions analysis or health and/or welfare effects testing under the regulations in this subpart, shall permit an authorized employee or duly designated representative of EPA, at reasonable times and in a reasonable manner, to inspect the facility and to inspect (and in the case of records also to copy) all records and specimens required to be maintained regarding studies to which this subpart applies. The records inspection and copying requirements shall not apply to quality assurance unit records of findings and problems, or to actions recommended and taken, except the EPA may seek production of these records in litigation or informal hearings.

(2) EPA will not consider reliable for purposes of showing that a test substance does or does not present a risk of injury to health or the environment any data developed by a testing facility or sponsor that refuses to permit inspection in accordance with this section. The determination that a study will not be considered reliable does not, however, relieve the sponsor of a required test of any obligation under any applicable statute or regulation to submit the results of the study to EPA.

(3) Effects of non-compliance. Pursuant to sections 114, 208, and 211(d) of the CAA, it shall be a violation of this section and a violation of 40 CFR part 79, subpart F to deny entry to an authorized employee or duly designated representative of EPA for the purpose of auditing a testing facility or test data.

(f) *Penalties and Injunctive Relief.* (1) Any person who violates these regulations shall be subject to a civil penalty of up to $25,000 for each and every day of the continuance of the violation and the economic benefit or savings resulting from the violation. Action to collect such civil penalties shall be commenced in accordance with paragraph (b) of section 205 of the Clean Air Act or assessed in accordance with paragraph (c) of section 205 of the Clean Air Act, 42 U.S.C. 7524 (b) and (c).

(2) Under section 205(b) of the CAA, the Administrator may commence a civil action for violation of this subpart in the district court of the United States for the district in which the violation is alleged to have occurred or in which the defendant resides or has a principal place of business.

(3) Under section 205(c) of the CAA, the Administrator may assess a civil penalty of $25,000 for each and every day of the continuance of the violation and the economic benefit or savings resulting from the violation, except that the maximum penalty assessment shall not exceed $200,000, unless the Administrator and the Attorney General jointly determine that a matter involving a larger penalty amount is appropriate for administrative penalty assessment. Any such determination by the Administrator and the Attorney General shall not be subject to judicial review.

(4) The Administrator may, upon application by the person against whom any such penalty has been assessed, remit or mitigate, with or without conditions, any such penalty.

(5) The district courts of the United States shall have jurisdiction to compel the furnishing of information and the conduct of tests required by the Administrator under these regulations and to award other appropriate relief. Actions to compel such actions shall be brought by and in the name of the United States. In any such action, subpoenas for witnesses who are required to attend a district court in any district may run into any other district.

(6) Cancellation.

(i) The Administrator of EPA may issue a notice of intent to cancel a fuel or fuel additive registration if the Administrator determines that the registrant has failed to submit in a timely manner any data required to maintain registration under this part or under section 211(b) or 211(e) of the Clean Air Act.

(ii) Upon issuance of a notice of intent to cancel, EPA will forward a copy of the notice to the registrant by certified mail, return receipt requested, at the address of record given in the registration, along with an explanation of the reasons for the proposed cancellation.

(iii) The registrant will be afforded 60 days from the date of receipt of the notice of intent to cancel to submit written comments concerning the notice, and to demonstrate or achieve compliance with the specific data requirements which provide the basis for the proposed cancellation. If the registrant does not respond in writing within 60 days from the date of receipt of the notice of intent to cancel, the cancellation of the registration shall become final by operation of law and the Administrator shall notify the registrant of such cancellation. If the registrant responds in writing within 60 days from the date of receipt of the notice of intent to cancel, the Administrator shall review and consider all comments submitted by the registrant before taking final action concerning the proposed cancellation. The registrants' communications should be sent to the following address: Director, Field Operations

and Support Division, 6406J—Fuel/Additives Registration, U.S. Environmental Protection Agency, 401 M Street SW., Washington, DC 20460.

(iv) As part of a written response to a notice of intent to cancel, a registrant may request an informal hearing concerning the notice. Any such request shall state with specificity the information the registrant wishes to present at such a hearing. If an informal hearing is requested, EPA shall schedule such a hearing within 60 days from the date of receipt of the request. If an informal hearing is held, the subject matter of the hearing shall be confined solely to whether or not the registrant has complied with the specific data requirements which provide the basis for the proposed cancellation. If an informal hearing is held, the designated presiding officer may be any EPA employee, the hearing procedures shall be informal, and the hearing shall not be subject to or governed by 40 CFR part 22 or by 5 U.S.C. 554, 556, or 557. A verbatim transcript of each informal hearing shall be kept and the Administrator shall consider all relevant evidence and arguments presented at the hearing in making a final decision concerning a proposed cancellation.

(v) If a registrant who has received a notice of intent to cancel submits a timely written response, and the Administrator decides after reviewing the response and the transcript of any informal hearing to cancel the registration, the Administrator shall issue a final cancellation order, forward a copy of the cancellation order to the registrant by certified mail, and promptly publish the cancellation order in the FEDERAL REGISTER. Any cancellation order issued after receipt of a timely written response by the registrant shall become legally effective five days after it is published in the FEDERAL REGISTER.

(g) *Modification of Regulation.* (1) In special circumstances, a manufacturer subject to the registration requirements of this rule may petition the Administrator to modify the mandatory testing requirements in the test standard for any test required by this rule by application to Director, Field Operations and Support Division, at the address in paragraph (f)(6)(iii) of this section.

(i) Such request shall be made as soon as the test sponsor is aware that the modification is necessary, but in no event shall the request be made after 30 days following the event which precipitated the request.

(ii) Upon such request, the Administrator may, in circumstances which are outside the control of the manufacturer(s) or his/their agent and which could not have been reasonably foreseen or avoided, modify the mandatory testing requirements in the rule if such requirements are infeasible.

(iii) If the Administrator determines that such modifications would not significantly alter the scope of the test, EPA will not ask for public comment before approving the modification. The Administrator will notify the test sponsor by certified mail of the response to the request. EPA will place copies of each application and EPA response in the public docket. EPA will publish a notice in the FEDERAL REGISTER annually describing such changes which have occurred during the previous year. Until such FEDERAL REGISTER notice is published, any modification approved by EPA shall apply only to the person or group who requested the modification; EPA shall state the applicability of each modification in such notice.

(iv) Where, in EPA's judgment, the requested modification of a test standard would significantly change the scope of the test, EPA will publish a notice in the FEDERAL REGISTER requesting comment on the request and proposed modification. However, EPA may approve a requested modification of a test standard without first seeking public comment if necessary to preserve the validity of an ongoing test undertaken in good faith.

(2) [Reserved]

(h) *Special Requirements for Additives.* When an additive is the test subject, the following rules apply:

(1) All required emission characterization and health effects testing procedures shall be performed on the mixture which results when the additive is combined with the base fuel for the appropriate fuel family (as specified in § 79.55) at the maximum concentration

recommended by the additive manufacturer pursuant to § 79.21(d). This combination shall be known as the additive/base fuel mixture.

(i) The appropriate fuel family to be utilized for the additive/base fuel mixture is the fuel family which contains the specific type(s) of fuel for which the additive is presently registered or for which the manufacturer of the additive is seeking registration.

(ii) Additives belonging to more than one fuel family.

(A) If an additive product is registered in two or more fuel families as of May 27, 1994, then the manufacturer of that additive is responsible for testing (or participating in group testing of) the respective additive/base fuel mixtures in compliance with the requirements of this subpart for each fuel family in which the manufacturer wishes to maintain a registration for its additive.

(B) If a manufacturer is seeking to register such additive in two or more fuel families then, for testing and registration purposes, the additive shall be considered to be a member of each fuel family in which the manufacturer is seeking registration. The manufacturer is responsible for testing (or participating in group testing of) the respective additive/base fuel mixture in compliance with the requirements of this subpart for each fuel family in which the manufacturer wishes to obtain a product registration for its additive.

(iii) In the case of the methanol fuel family, which contains two base fuels (M100 and M85 base fuels, pursuant to § 79.55(d)), the applicable base fuel is the one which represents the fuel/additive group (specified in § 79.56(e)(4)(i)(C)) containing fuels of which the most gallons are sold annually.

(iv) Aftermarket additives which are intended by the manufacturer to be added to the fuel tank only at infrequent intervals shall be applied according to the manufacturer's specifications during mileage accumulation, pursuant to § 79.57(c). However, during emission generation and testing, each tankful of fuel used must contain the fuel additive at its maximum recommended level. If the additive manufacturer believes that this maximum treatment rate will cause adverse effects to the test engine and/or that the engine's emissions may be subject to artifacts due to overuse of the additive, then the manufacturer may submit a request to EPA for modification of this requirement and related test procedures. Such request must include objective evidence that the modification(s) are needed, along with data demonstrating the maximum concentration of the additive which may actually reach the fuel tanks of vehicles in use.

(v) Additives produced exclusively for use in #1 diesel fuel shall be tested in the diesel base fuel specified in § 79.55(c), even though that base fuel is formulated with #2 diesel fuel. If a manufacturer is concerned that emissions generated from this combination of fuel and additive are subject to artifacts due to this blending, then that manufacturer may submit a request for a modification in test procedure requirements to the EPA. Any such request must include supporting test results and suggested test modifications.

(vi) Bulk additives which are used intermittently for the direct purpose of conditioning or treating a fuel during storage or transport, or for treating or maintaining the storage, pipeline, and/or other components of the fuel distribution system itself and not the vehicle/engine for which the fuel is ultimately intended, shall, for purposes of this program, be added to the base fuel at the maximum concentration recommended by the additive manufacturer for treatment of the fuel or distribution system component. However, if the additive manufacturer believes that this treatment rate will cause adverse effects to the test engine and/or that the engine's emissions may be subject to artifacts due to overuse of the additive, then the manufacturer may submit a request to EPA for modification of this requirement and related test procedures. Such request must include objective evidence that the modification(s) are needed, along with data demonstrating the maximum concentration of the additive which may actually reach the fuel tanks of vehicles in use.

(2) EPA shall use emissions speciation and health effects data generated in the analysis of the applicable base fuel as control data for comparison with data generated for the additive/base fuel mixture.

(i) The base fuel control data may be:

(A) Generated internally as an experimental control in conjunction with testing done in compliance with registration requirements for a specific additive; or

(B) Generated externally in the course of testing different additive(s) belonging to the same fuel family, or in the testing of a base fuel serving as representative of the baseline group for the respective fuel family pursuant to § 79.56(e)(4)(i).

(ii) Control data generated using test equipment (including vehicle model and/or engine, or Evaporative Emissions Generator specifications, as appropriate) and protocols identical or nearly identical to those used in emissions and health effects testing of the subject additive/base fuel mixture would be most relevant for comparison purposes.

(iii) If an additive manufacturer chooses the same vehicle/engine to independently test the base fuel as an experimental control prior to testing the additive/base fuel mixture, then the test vehicle/engine shall undergo two mileage accumulation periods, pursuant to § 79.57(c). The initial mileage accumulation period shall be performed using the base fuel alone. After base fuel testing, and prior to testing of the additive/base fuel mixture, a second mileage accumulation period shall be performed using the additive/base fuel mixture. The procedures outlined in this paragraph shall not preclude a manufacturer from testing a base fuel and the manufacturer's additive/base fuel mixture separately in identical, or nearly identical, vehicles/engines.

(i) *Multiple Test Potential for Non-Baseline Products.* (1) When the composition information reported in the registration application or basic registration data for a gasoline or diesel product meets criteria for classification as a non-baseline product (pursuant to § 79.56(e)(3)(i)(B) or § 79.56(e)(3)(ii)(B)), then the manufacturer is responsible for testing (or participating in group testing) of a separate formulation for each reported oxygenating compound, specified class of oxygenating compounds, or other substance which defines a separate non-baseline fuel/additive group pursuant to § 79.56(e)(4)(ii)(A) or (B). For each such substance, testing shall be performed on a mixture of the relevant substance in the appropriate base fuel, formulated according to the specifications for the corresponding group representatives in § 79.56(e)(4)(ii).

(2) When the composition information reported in the registration application or basic registration data for a non- baseline gasoline product contains a range of total oxygenate concentration-in-use which encompasses gasoline formulations with less than 1.5 weight percent oxygen as well as gasoline formulations with 1.5 weight percent oxygen or more, then the manufacturer is required to test (or participate in applicable group testing of) a baseline gasoline formulation as well as one or more non-baseline gasoline formulations as described in paragraph (h)(1) of this section.

(3) When the composition information reported in the registration application or basic registration data for a non- baseline diesel product contains a range of total oxygenate concentration-in-use which encompasses diesel formulations with less than 1.0 weight percent oxygen as well as diesel formulations with 1.0 weight percent oxygen or more, then the manufacturer is required to test (or participate in applicable group testing) of a baseline diesel formulation as well as one or more non-baseline diesel formulations as described in paragraph (h)(1) of this section.

(4) The presence in a particular oxygenating additive of small amounts of other unintended oxygenate compounds as byproducts of the manufacturing process of the given oxygenating additive does not affect the grouping of that additive and does not create multiple testing responsibilities for manufacturers who blend that additive into fuel.

(j) *Multiple Test Potential for Atypical Fuel Formulations.* When the composition information reported in the registration application or basic registration data for a fuel product includes more than one atypical bulk additive product (pursuant to § 79.56(e)(2)(iii)), and when these additives belong to different fuel/additive groups (pursuant to § 79.56(e)(4)(iii)), then:

(1) When such disparate additive products are for the same purpose-in-use and are not ordinarily used in the fuel simultaneously, the fuel manufacturer shall be responsible for testing (or participating in the group testing of) a separate formulation for each such additive product. Testing related to each additive product shall be performed on a mixture of the additive in the applicable base fuel, as described in paragraph (g)(1) of this section, or by participation in the costs of testing the designated representative of the fuel/additive group to which each separate atypical additive product belongs.

(2) When the disparate additive products are not for the same purpose-in-use, the fuel manufacturer shall nevertheless be responsible for testing a separate formulation for each such additive product, as described in paragraph (g)(1) of this section, if these additives are not ordinarily blended together in the same commercial formulation of the fuel.

(3) When the disparate additive products are ordinarily blended together in the same commercial formulation of the fuel, then the fuel manufacturer shall be responsible for the testing of a single test formulation containing all such simultaneously used atypical additive products. Alternatively, this responsibility can be satisfied by enrolling such fuel product in a group which includes other fuel or additive products with the same total combination of atypical elements as that occurring in the fuel product in question. If the basic registration data for the subject fuel includes any alternative additives which contain atypical elements not represented in the test formulation, then the fuel manufacturer is also responsible for testing a separate formulation for each such additional disparate additive product.

(k) *Emission Control System Testing.* If any information submitted in accordance with this subpart or any other information available to EPA shows that a fuel or fuel additive may have a deleterious effect on the performance of any emission control system or device currently in use or which has been developed to a point where in a reasonable time it would be in general use were such effect avoided, EPA may, in its judgment, require testing to determine whether such effects in fact exist. Such testing will be required in accordance with such protocols and schedules as the Administrator shall reasonably require and shall be paid for by the fuel or fuel additive manufacturer.

[59 FR 33093, June 27, 1994, as amended at 61 FR 36511, July 11, 1996; 62 FR 12575, Mar. 17, 1997]

§ 79.52 Tier 1.

(a) *General Specifications.* Tier 1 requires manufacturers of designated fuels or fuel additives (or groups of manufacturers pursuant to § 79.56) to supply to the Administrator the identity and concentration of certain emission products of such fuels or additives and any available information regarding the health and welfare effects of the whole and speciated emissions of such fuels or additives. In addition to any information required under § 79.59 and in conformance with the reporting requirements thereof, manufacturers shall provide, pursuant to the timing provisions of § 79.51(c), the following information.

(b) *Emissions Characterization.* Manufacturers must provide a characterization of the emission products which are generated by evaporation (if required pursuant to § 79.58(b)) and by combustion of the fuel or additive/base fuel mixture in a motor vehicle. For this purpose, manufacturers may perform the characterization procedures described in this section or may rely on existing emission characterization data. To be considered adequate in lieu of performing new emission characterization procedures, the data must be the result of tests using the product in question or using a fuel or additive/base fuel mixture meeting the same grouping criteria as the product in question. In addition, the emissions

must be generated in a manner reasonably similar to those described in § 79.57, and the characterization procedures must be adequately performed and documented and must give results reasonably comparable to those which would be obtained by performing the procedures described herein. Reports of previous tests must be sufficiently detailed to allow EPA to judge the adequacy of protocols, techniques, and conclusions. After the manufacturer's submittal of such data, if EPA finds that the manufacturer has relied upon inadequate test data, then the manufacturer will not be considered to be in compliance until the corresponding tests have been conducted and the results submitted to EPA.

(1) *General Provisions.* (i) The emissions to be characterized shall be generated, collected, and stored according to the processes described in § 79.57. Characterization of combustion and evaporative emissions shall be performed separately on each emission sample collected during the applicable emission generation procedure.

(ii) As provided in § 79.57(d), if the emission generation vehicle/engine is ordinarily equipped with an emission aftertreatment device, then all requirements in this section for the characterization of combustion emissions must be completed both with and without the aftertreatment device in a functional state. The emissions shall be generated three times (on three different days) without a functional aftertreatment device and, if applicable, three times (on three different days) with a functional aftertreatment device, and each such time shall be analyzed according to the remaining provisions in this paragraph (b) of this section.

(iii) Measurement of background emissions: It is required that ambient/dilution air be analyzed for levels of background chemical species present at the time of emissions sampling (for both combustion and evaporative emissions) and that sample values be corrected by substracting the concentrations contributed by the ambient/dilution air. Background chemical species measurement/analysis during the FTP is specified in §§ 86.109–94(c)(5) and 86.135–94 of this chapter.

(iv) Concentrations of emission products shall be reported either in units of grams per mile (g/mi) or grams per brake-horsepower/hour (g/bhp-hr) (for chassis dynamometer and engine dynamometer test configurations, respectively), as well as in units of weight percent of measured total hydrocarbons.

(v) Laboratory practice must be of high quality and must be consistent with state-of-the-art methods as presented in current environmental and analytical chemistry literature. Examples of analytical procedures which may be used in conducting the emission characterization/speciation requirements of this section can be found among the references in paragraph (b)(5) of this section.

(2) Characterization of the combustion emissions shall include, for products in all fuel families (except when expressly noted in this section):

(i) Determination of the concentration of the basic emissions as follows: total hydrocarbons, carbon monoxide, oxides of nitrogen, and particulates. Manufacturers are referred to the vehicle certification procedures in 40 CFR part 86, subparts B and D (§§ 86.101 through 86.145 and §§ 86.301 through 86.348) for guidance on the measurement of the basic emissions of interest to this subpart.

(ii) Characterization of the vapor phase of combustion emissions, as follows:

(A) Determination of the identity and concentration of individual species of hydrocarbon compounds containing 12 or fewer carbon atoms. Such characterization shall begin within 30 minutes after emission collection is completed.

(B) Determination of the identity and concentration of individual species of aldehyde and ketone compounds containing eight or fewer carbon atoms. Characterization of these emissions captured in cartridges shall be performed within two weeks if the cartridge is stored at room temperature, and one month if the cartridge is stored at 0 °C or less. If the emissions are sampled using the impinger method, the sample must be stored in a capped sample vial at 0 °C or less and characterized within one week.

(C) Determination of the identity and concentration of individual species of alcohol and ether compounds containing six or fewer carbon atoms, for those fuels and additive/base fuel mixtures which contain alcohol and/or ether compounds containing from one to six carbon atoms in the uncombusted state. For fuel and additive formulations containing alcohols or ethers with more than six carbon atoms in the uncombusted state, alcohol and ether species with that higher number of carbon atoms or less must be identified and measured in the emissions. Such characterization shall begin within four hours after emission collection is completed.

(iii) Characterization of the semi-volatile and particulate phases of combustion emissions to identify and measure polycyclic aromatic compounds, as follows:

(A) Analysis for polycyclic aromatic compounds shall not be conducted at or soon after the start of a recommended engine lubricant change interval.

(B) Analysis for polycyclic aromatic hydrocarbons (PAHs) and nitrated polycyclic aromatic hydrocarbons (NPAHs), specified in paragraph (b)(2)(iii)(D) of this section, need not be done for any fuels and additives in the methane or propane fuel families, nor for fuels and additives in the atypical categories of any other fuel families, pursuant to the definitions of such families and categories in § 79.56.

(C) Analysis for poly-chlorinated dibenzodioxins and dibenzofurans (PCDD/PCDFs), specified in paragraph (b)(2)(iii)(E) of this section, is required only for fuels and additives which contain chlorine as an atypical element, pursuant to paragraph (b)(2)(iv) of this section, which requires all individual emission products containing atypical elements to be determined for atypical fuels and additives. However, manufacturers of baseline and nonbaseline fuels and fuel additives in all fuel families, except those in the methane and propane fuel families, are strongly encouraged to conduct these analyses on a voluntary basis.

(D) The analytical method used to measure species of PAHs and NPAHs should be capable of detecting at least 1 ppm (equivalent to 0.001 microgram (μg) of compound per milligram of organic extract) of these compounds in the extractable organic matter. The concentration of each individual PAH or NPAH compound identified shall be reported in units of microgram per mile or nanograms per brake-horsepower/hour (for chassis dynamometer and engine dynamometer test configurations, respectively). Each compound which is present at 0.001 μg per mile (0.5 nanograms per brake-horsepower/hour) or more must be identified, measured, and reported. The following individual species shall be measured:

(*1*) PAHs:

(*i*) Benzo(*a*)anthracene;

(*ii*) Benzo[*b*]fluoranthene;

(*iii*) Benzo[*k*]fluoranthene;

(*iv*) Benzo(*a*)pyrene;

(*v*) Chrysene;

(*vi*) Dibenzo[*a,h*]anthracene; and

(*vii*) Indeno[1,2,3-*c,d*]pyrene.

(*2*) NPAHs:

(*i*) 7-Nitrobenzo[*a*]anthracene;

(*ii*) 6-Nitrobenzo[*a*]pyrene;

(*iii*) 6-Nitrochrysene;

(*iv*) 2-Nitrofluorene; and

(*v*) 1-Nitropyrene.

(E) The analytical method used to measure species and classes of PCDD/PCDFs should be capable of detecting at least 1 part per trillion (ppt) (equivalent to 0.001 picogram (pg) of compound per milligram of organic extract) of these compounds in the extractable organic matter. The concentration of each individual PCDD/PCDF compound identified shall be reported in units of picograms (pg) per mile or picograms per brake-horsepower/hour (for chassis dynamometer and engine dynamometer test configurations, respectively). Each compound which is present at 0.5 pg/mile (0.3 pg/bhp-hr) or more must be identified, measured, and reported.

(*1*) With respect to measurement of PCDD/PCDFs only, the liquid extracts from the particulate and semi-volatile emissions fractions may be combined into one sample for analysis.

(*2*) The manufacturer is referred to 40 CFR part 60, appendix A, Method 23 for a protocol which may be used to identify and measure any potential PCDD/PCDFs which might be present in exhaust emissions from a fuel or additive/base fuel mixture.

(*3*) The following individual compounds and classes of compounds of PCDD/PCDFs shall be identified and measured:

(*i*) Individual tetra-chloro-substituted dibenzodioxins (tetra-CDDs);

(*ii*) Individual tetra-chloro-substituted dibenzofurans (tetra-CDFs);

(*iii*) Penta-CDDs and penta-CDFs, as one class;

(*iv*) Hexa-CDDs and hexa-CDFs, as one class;

(*v*) Hepta-CDDs and hepta-CDFs as one class; and

(*vi*) Octo-CDDs and octo-CDFs as one class.

(iv) With respect to all phases (vapor, semi-volatile, and particulate) of combustion emissions generated from those fuels and additive/base fuel mixtures classified in the atypical categories (pursuant to § 79.56), the identity and concentration of individual emission products containing such atypical elements shall also be determined.

(3) For evaporative fuels and evaporative fuel additives, characterization of the evaporative emissions shall include:

(i) Determination of the concentration of total hydrocarbons for the applicable vehicle type and class in 40 CFR part 86, subpart B (§§ 86.101 through 86.145).

(ii) Determination of the identity and concentration of individual species of hydrocarbon compounds containing 12 or fewer carbon atoms. Such characterization shall begin within 30 minutes after emission collection is completed.

(iii) In the case of those fuels and additive/base fuel mixtures which contain alcohol and/or ether compounds in the uncombusted state, determination of the identity and concentration of individual species of alcohol and ether compounds containing six or fewer carbon atoms. For fuel and additive formulations containing alcohols or ethers with more than six carbon atoms in the uncombusted state, alcohol and ether species with that higher number of carbon atoms or less must be identified and measured in the emissions. Such characterization shall begin within four hours after emission collection is completed.

(iv) In the case of those fuels and additive/base fuel mixtures which contain atypical elements, determination of the identity and concentration of individual emission products containing such atypical elements.

(4) *Laboratory quality control.* (i) At a minimum, laboratories performing the procedures specified in this section shall conduct calibration testing of their emissions characterization equipment before each new fuel/additive product test start-up. Known samples representative of the compounds potentially to be found in emissions from the product to be characterized shall be used to calibrate such equipment.

(ii) Laboratories performing the procedures specified in this section shall agree to permit quality control inspections by EPA, and for this purpose shall admit any EPA Enforcement Officer, upon proper presentation of credentials, to any facility where vehicles are conditioned or where emissions are generated, collected, stored, sampled, or characterized in meeting the requirements of this section. Such laboratory audits may include EPA distribution of ''blind'' samples for analysis by participating laboratories.

(5) *References.* For additional background information on the emission characterization procedures outlined in this paragraph, the following references may be consulted:

(i) ''Advanced Emission Speciation Methodologies for the Auto/Oil Air Quality Improvement Program—I. Hydrocarbons and Ethers,'' Auto Oil Air Quality Improvement Research Program, SP–920, 920320, SAE, February 1992.

(ii) ''Advanced Speciation Methodologies for the Auto/Oil Air Quality Improvement Research Program—II. Aldehydes, Ketones, and Alcohols,'' Auto Oil Air Quality Improvement Research Program, SP–920, 920321, SAE, February 1992.

(iii) ASTM D 5197–91, ''Standard Test Method for Determination of Formaldehyde and Other Carbonyl Compounds in Air (Active Sampler Methodology).''

(iv) Johnson J. H., Bagley, S. T., Gratz, L. D., and Leddy, D. G., ''A Review of Diesel Particulate Control Technology and Emissions Effects—

1992 Horning Memorial Award Lecture,'' SAE Technical Paper Series, SAE 940233, 1994.

(v) Keith *et al.*, ACS Committee on Environmental Improvement, ''Principles of Environmental Analysis,'' The Journal of Analytical Chemistry, Volume 55, pp. 2210–2218, 1983.

(vi) Perez, J.M., Jabs, R.E., Leddy, D.G., eds. ''Chemical Methods for the Measurement of Unregulated Diesel Emissions (CRC–APRAC Project No. CAPI–1–64), Coordinating Research Council, CRC Report No. 551, August, 1987.

(vii) Schuetzle, D., ''Analysis of Nitrated Polycyclic Aromatic Hydrocarbons in Diesel Particulates,'' Analytical Chemistry, Volume 54, pp. 265–271, 1982.

(viii) Siegl, W.O., *et al.*, ''Improved Emissions Speciation Methodology for Phase II of the Auto/Oil Air Quality Improvement Research Program—Hydrocarbons and Oxygenates'', SAE Technical Paper Series, SAE 930142, 1993.

(ix) Tejada, S. B. *et al.*, ''Analysis of Nitroaromatics in Diesel and Gasoline Car Emissions,'' SAE Paper No. 820775, 1982.

(x) Tejada, S. B. *et al.*, ''Fluorescence Detection and Identification of Nitro Derivatives of Polynuclear Aromatic Hydrocarbons by On-Column Catalytic Reduction to Aromatic Amines,'' Analytical Chemistry, Volume 58, pp. 1827–1834, July 1986.

(xi) ''Test Method for Determination of C1–C4 Alcohols and MTBE in Gasoline by Gas Chromatography,'' 40 CFR part 80, appendix F.

(c) [Reserved]

(d) *Literature Search.* (1) Manufacturers of fuels and fuel additives shall conduct a literature search and compilation of information on the potential toxicologic, environmental, and other public welfare effects of the emissions of such fuels and additives. The literature search shall include all available relevant information from in-house, industry, government, and public sources pertaining to the emissions of the subject fuel or fuel additive or the emissions of similar fuels or additives, with such similarity determined according to the provisions of § 79.56.

(2) The literature search shall address the potential adverse effects of whole combustion emissions, evaporative emissions, relevant emission fractions, and individual emission products of the subject fuel or fuel additive except as specified in the following paragraph. The individual emission products to be included are those identified pursuant to the emission characterization procedures specified in paragraph (b) of this section, other than carbon monoxide, carbon dioxide, nitrogen oxides, benzene, 1,3-butadiene, acetaldehyde, and formaldehyde.

(3) In the case of the individual emission products of non-baseline or atypical fuels and additives (pursuant to § 79.56(e)(2)), the literature data need not be submitted for those emission products which are the same as the combustion emission products of the respective base fuel for the product's fuel family (pursuant to § 79.55). For this purpose, data on the base fuel emission products for the product's fuel family:

(i) May be found in the literature of previously-conducted, adequate emission speciation studies for the base fuel, or for a fuel or additive/fuel mixture capable of grouping with the base fuel (see, for example, the references in paragraph (b)(5) of this section).

(ii) May be compiled while gathering internal control data during emissions characterization studies on the manufacturer's non-baseline or atypical product; or

(iii) May be obtained from various manufacturers in the course of their testing different additive(s) belonging to the same fuel family, or in the testing of a base fuel serving as representative of the baseline group for the respective fuel family.

(e) *Data bases.* The literature search must include the results of searching appropriate commercially available chemical, toxicologic, and environmental databases. The databases shall be searched using, at a minimum, CAS numbers (when applicable), chemical names, and common synonyms.

(f) *Search period.* The literature search shall cover a time period beginning at least thirty years prior to the date of submission of the reports specified in §§ 79.59(b) through (c) and ending

no earlier than six months prior to the date on which testing is commenced or reports are submitted in compliance with this subpart.

(g) *References.* Information on base fuel emission inventories may be found in references in paragraphs (b)(5)(i) through (xi) of this section, as well as in the following:

(1) Auto/Oil Air Quality Improvement Research Program, Technical Bulletin #1, December 1990.

(2) Keith *et al.*, ACS Committee on Environmental Improvement, ''Principles of Environmental Analysis,'' The Journal of Analytical Chemistry, Volume 55, pp. 2210–2218, 1983.

(3) ''The Composition of Gasoline Engine Hydrocarbon Emissions—An Evaluation of Catalyst and Fuel Effects''—SAE 902074 and ''Speciated Hydrocarbon Emissions from Aromatic, Olefin, and Paraffinic Model Fuels''—SAE 930373.

[59 FR 33093, June 27, 1994, as amended at 61 FR 36511, July 11, 1996; 62 FR 12571, Mar. 17, 1997]

§79.53 Tier 2.

(a) *Generally.* Subject to the provisions of §79.53(b) through (d), the combustion emissions of each fuel or fuel additive subject to testing under this subpart must be tested in accordance with each of the testing guidelines in §§79.60 through 79.68, except that fuels and additives in the methane and propane fuel families (pursuant to §79.56(e)(1)(v) and (vi)) need not undergo the Salmonella mutagenicity assay in §79.68). Similarly, subject to the provisions of §79.53(b) through (d), the evaporative emissions of each designated evaporative fuel and each designated evaporative fuel additive subject to testing under this subpart must be tested according to each of the testing guidelines in §§79.60 through 79.67 (excluding §79.68, *Salmonella typhimurium* Reverse Mutation Assay).

(b) *Manufacturer Determination.* Manufacturers shall determine whether the information gathered pursuant to the literature search in §79.52(d) contains the results of adequately performed and adequately documented previous testing which provides information reasonably comparable to that supplied by the health tests described in §§79.62 through 79.68 regarding the carcinogenicity, mutagenicity, neurotoxicity, teratogenicity, reproductive/fertility measures, and general toxicity effects of the emissions of the fuel or additive. When manufacturers make an affirmative determination, they need submit only the information gathered pursuant to §79.52(d) for such tests. EPA maintains final authority in judging whether the information is an adequate substitution in lieu of conducting the associated tests. EPA's determination of the adequacy of existing information shall be guided by the considerations described in paragraph (d) of this section. If EPA finds that the manufacturer has relied upon inadequate test data, then the manufacturer will not be considered to be in compliance until the corresponding tests have been conducted and the results submitted to EPA.

(c) *Testing.* (1) All testing required pursuant to this section must be done in accordance with the procedures, equipment, and facility requirements described in §§79.57, 79.60, and 79.61 regarding emissions generation, good laboratory practices, and inhalation exposure testing, respectively, as well as any other requirements described in this subpart. The laboratory conducting the animal studies shall be registered and in good standing with the United States Department of Agriculture and regularly inspected by United States Department of Agriculture veterinarians. In addition, the facility must be accredited by a generally recognized independent organization which sets laboratory animal care standards. Use of inadequate test protocols or substandard laboratory techniques in performing any testing required by this subpart may result in cancellation of all affected registrations.

(2) Carcinogenic or mutagenic effects in animals from emissions exposures shall be determined pursuant to §79.64 *In vivo* Micronucleus Assay, §79.65 *In vivo* Sister Chromatid Exchange Assay, and §79.68 *Salmonella typhimurium* Reverse Mutation Assay. Teratogenic effects and reproductive toxicity shall be examined pursuant to §79.63 Fertility

Assessment/Teratology. General toxicity and pulmonary effects shall be determined pursuant to § 79.62 Subchronic Toxicity Study with Specific Health Effect Assessments. Neurotoxic effects shall be determined pursuant to § 79.66 Neuropathology Assessment and § 79.67 Glial Fibrillary Acidic Protein Assay.

(d) *EPA Determination.* (1) After submission of all information and testing, EPA in its judgment shall determine whether previously conducted tests relied upon in the registration submission are adequately performed and documented and provide information reasonably comparable to that which would be provided by the tests described herein. Manufacturers' submissions shall be sufficiently detailed to allow EPA to judge the adequacy of protocols, techniques, experimental design, statistical analyses, and conclusions. Studies shall be performed using generally accepted scientific principles, good laboratory techniques, and the testing guidelines specified in these regulations.

(2) EPA shall give appropriate weight when making this determination to the following factors:

(i) The age of the data;

(ii) The adequacy of documentation of procedures, findings, and conclusions;

(iii) The extent to which the testing conforms to generally accepted scientific principles and practices;

(iv) The type and number of test subjects;

(v) The number and adequacy of exposure concentrations, *i.e.*, emission dilutions;

(vi) The degree to which the tested emissions were generated by procedures and under conditions reasonably comparable to those set forth in § 79.57; and

(vii) The degree to which the test procedures conform to the testing guidelines set forth in §§ 79.60 through 79.68 and/or furnish information comparable to that provided by such testing.

(3) The test animals shall be rodents, preferably a strain of rat, and testing shall include all of the endpoints covered in §§ 79.62 through 79.68. All studies shall be properly executed, with appropriate documentation, and in accord with the individual health testing guidelines (§§ 79.60 through 79.68) of this part, e.g., 90-day, 6-hour per day exposure, minimum.

(4) In general, the data in a manufacturer's registration submittal shall be adequate if the duration of a test's exposure period is at least as long, in days and hours, as the inhalation exposure specified in the related health test guideline(s). Data from tests with shorter exposure durations than those specified in the guidelines may be acceptable if the test results are positive (*i.e.*, exhibit adverse effects) and/or include a demonstrable concentration-response relationship.

(5) Data in support of a manufacturer's registration submittal shall directly address the effects of inhalation exposure to the whole evaporative and exhaust emissions of the respective fuel or additive or to the whole evaporative and exhaust emissions of other fuels or additives which satisfy the criteria in § 79.56 for classification into the same group as the subject fuel or fuel additive. Data obtained in the testing of a raw liquid fuel or additive/base fuel mixture or a raw, aerosolized fuel or additive/base fuel mixture shall not be adequate to support a manufacturer's registration submittal. Data from testing of evaporative emissions cannot substitute for test data on combustion emissions. Data from testing of combustion emissions cannot substitute for test data on evaporative emissions.

§ 79.54 Tier 3.

(a) *General Criteria for Requiring Tier 3 Testing.* (1) Tier 3 testing shall be required of a manufacturer or group of manufacturers at EPA's discretion when remaining uncertainties as to the significance of observed health effects, welfare effects, and/or emissions exposures from a fuel or fuel/additive mixture interfere with EPA's ability to make reasonable estimates of the potential risks posed by emissions from the fuel or additive products. Tier 3 testing may be conducted either on an individual basis or a group basis. If performed on a group basis, EPA may require either the same representative to be used in Tier 3 testing as was used in Tier 2 testing or may select a different

member or members of the group to represent the group in the Tier 3 tests.

(2) In addition to the criteria specific to particular tests as summarized and detailed in the testing guidelines (§§ 79.62 through 79.68), EPA may consider a number of factors (including, but not limited to):

(i) The number of positive and negative outcomes related to each endpoint;

(ii) The identification of concentration-effect relationships;

(iii) The statistical sensitivity and significance of such studies;

(iv) The severity of the observed effects (e.g., whether the effects would be likely to lead to incapacitating or irreversible conditions);

(v) The type and number of species included in the reported tests;

(vi) The consistency and clarity of apparent mechanisms, target organs, and outcomes;

(vii) The presence or absence of effective health test control data for base-fuel-only versus additive/base fuel mixture comparisons;

(viii) The nature and amount of known toxic agents in the emissions stream; and

(ix) The observation of lesions which specifically implicate inhalation as an important exposure route.

(3) *Consideration of exposure.* EPA retains discretion to consider, in addition to available toxicity data, any Tier 1 data on potential exposures to emissions from a particular fuel or fuel additive (or group of fuels and/or fuel additives) in determining whether to require Tier 3 testing. EPA may consider, but is not limited to, the following factors:

(i) Types and emission rates of speciated emission components;

(ii) Types and emission rates of combinations of compounds or elements of concern;

(iii) Historical and/or projected production volumes and market distributions; and

(iv) Estimated population and/or environmental exposures obtained through extrapolation, modeling, or literature search findings on ambient, occupational, or epidemiological exposures.

(b) *Notice.* (1) EPA will determine whether Tier 3 testing is necessary upon receipt of a manufacturer's (or group's) submittal as prescribed under § 79.51(d). If EPA determines on the basis of the Tier 1 and 2 data submission and any other available information that further testing is necessary, EPA will require the responsible manufacturer(s) to conduct testing as described elsewhere in this section. EPA will notify the manufacturer (or group) by certified letter of the purpose and nature of any proposed testing and of the proposed deadline for completing the testing. A copy of the letter will be placed in the public record. EPA will provide the manufacturer a 60-day comment period after the manufacturer's receipt of such notice. EPA may extend the comment period if it appears from the nature of the issues raised that further discussion is warranted. In the event that no comment is received by EPA from the manufacturer (or group) within the comment period, the manufacturer (or group) shall be deemed to have consented to the adoption by EPA of the proposed Tier 3 requirements.

(2) EPA will issue a notice in the FEDERAL REGISTER of its intent to require testing under Tier 3 for a particular fuel or additive manufacturer and that a copy of the letter to the manufacturer outlining the Tier 3 testing for that manufacturer is available in the public record for review and comment. The public shall have a minimum of thirty (30) days after the publication of this notice to comment on the proposed Tier 3 testing.

(3) EPA will include in the public record a copy of any timely comments concerning the proposed Tier 3 testing requirements received from the affected manufacturer or group or from the public, and the responses of EPA to such comments. After reviewing all such comments received, EPA will adopt final Tier 3 requirements by sending a certified letter describing such final requirements to the manufacturer or group. EPA will also issue a notice in the FEDERAL REGISTER announcing that it has adopted such final Tier 3 requirements and that a copy of the letter adopting the requirements has been included in the public record.

(4) Prior to beginning any required Tier 3 testing, the manufacturer shall

submit detailed test protocols to EPA for approval. Once EPA has determined the Tier 3 testing requirements and approves the test protocols, any modification to the requirements shall be governed by § 79.51(f).

(c) *Carcinogenicity and Mutagenicity Testing.* (1) A potential need for Tier 3 carcinogenicity and/or mutagenicity testing may be indicated if the results of the *In vivo* Micronucleus Assay, required under § 79.64, the *In vivo* Sister Chromatid Exchange Assay, required under § 79.65, the Salmonella mutagenicity assay required under § 79.68, or relevant pathologic findings under § 79.62 demonstrate a statistically significant dose-related positive response as compared with appropriate controls. Alternatively, Tier 3 carcinogenicity testing and/or mutagenicity testing may be required if there are positive outcomes for at least one concentration in two or more of the tests required under §§ 79.64, 79.65, and 79.68.

(2) The testing for carcinogenicity required under this paragraph may, at EPA's discretion, be conducted in accordance with 40 CFR 798.3300 or 798.3320, or their equivalents (see suggested references following each health effects testing guideline). The testing for mutagenicity required under this paragraph may likewise be conducted in accordance with 40 CFR 798.5195, 798.5500, 798.5955, 798.7100, and/or other suitable equivalent testing (see suggested references following each health effects testing guideline). EPA may supplement or modify guidelines as required to ensure that the prescribed testing addresses the identified areas of concern.

(d) *Reproductive and Teratological Effects Testing.* (1) A potential need for Tier 3 testing may be indicated if the results of the Fertility Assessment/Teratology study required under § 79.63 or relevant findings under § 79.62 demonstrate, in comparison with appropriate controls, a statistically significant dose-related positive response in one or more of the possible test outcomes. Similarly, Tier 3 testing may be indicated if statistically significant positive results are confined to either sex, or to the fetus as opposed to the pregnant adult.

(2) The testing for reproductive and teratological effects required under this paragraph may, at EPA's discretion, be conducted in accordance with 40 CFR 798.4700 and/or by performance of a reproductive assay by continuous breeding. These guidelines may be modified or supplemented by EPA as required to ensure that the prescribed testing addresses the identified areas of concern.

(e) *Neurotoxicity Testing.* (1) A potential need for Tier 3 neurotoxicity testing may be indicated if either the results of the Neuropathology Assessment required under § 79.67 shows concentration-related effects in exposed animals or the Glial Fibrillary Acidic Protein Assay required under § 79.66 demonstrates a statistically significant concentration-related positive response as compared with appropriate controls. Similarly, Tier 3 neurotoxicity testing may be indicated if relevant results under § 79.62 demonstrate a statistically significant positive response in comparison to appropriate controls.

(2) The testing for neurotoxicity required under this paragraph may, at EPA's discretion, be conducted in accordance with 40 CFR 798.3260 and 40 CFR part 798 subpart G. These guidelines may be modified or supplemented by EPA as required to ensure that the prescribed testing addresses the identified areas of concern.

(f) *General and Pulmonary Toxicity Testing.* (1) A potential need for Tier 3 general and/or pulmonary toxicity testing may be indicated if, in comparison with appropriate controls, the results of the Subchronic Toxicity Study, pursuant to § 79.62, demonstrate abnormal gross analysis or histopathological findings (especially as relates to lung pathology from whole-body preserved test animals) or persistence or delayed occurrence of toxic effects beyond the exposure period.

(2) A potential need for Tier 3 testing with respect to other organ systems or endpoints not addressed by specific Tier 2 tests, e.g., hepatic, renal, or endocrine toxicity, may be demonstrated by findings in the Tier 2 Subchronic Toxicity Study (pursuant to § 79.62) or by findings in the Tier 1 literature

search of adverse functional, physiologic, metabolic, or histopathologic effects of fuel or additive emissions to such other organ systems or any other information available to EPA. In addition, findings in the Tier 1 emission characterization of significant levels of a known toxicant to such other organ systems and endpoints may also indicate a need for relevant health effects testing. The testing required under this paragraph may include tests conducted in accordance with 40 CFR 798.3260 or 798.3320. These guidelines may be modified or supplemented by EPA as necessary to ensure that the prescribed testing addresses the identified areas of concern.

(3) The testing for general/pulmonary toxicity required under this paragraph may, at EPA's discretion, be conducted in accordance with 40 CFR 798.2450 or 798.3260. These guidelines may be modified or supplemented by EPA as necessary to ensure that the prescribed testing addresses the identified areas of concern. Pulmonary function measurements, host defense assays, immunotoxicity tests, cell morphology/morphometry, and/or enzyme assays of lung lavage cells and fluids may be specifically required.

(g) *Other Tier 3 Testing.* (1) A manufacturer or group may be required to use up-to-date modeling, sampling, monitoring, and/or analytic approaches at the Tier 3 level to provide:

(i) Estimates of exposures to the emission products of a fuel or fuel additive or group of products;

(ii) The expected atmospheric transformation products of such emissions; and

(iii) The environmental partitioning of such emissions to the air, soil, water, and biota.

(2) Additional emission characterization may be required if uncertainty over the identity of chemical species or rate of their emission interferes with reasonable judgments as to the presence and/or concentration of potentially toxic substances in the emissions of a fuel or fuel additive. The required tests may include characterization of additional classes of emissions, the characterization of emissions generated by additional vehicles/engines of various technology mixes (e.g., catalyzed versus non-catalyzed emissions), and/or other more precise analytic procedures for identification or quantification of emissions compounds. Additional emissions testing may also be required to evaluate concerns which may arise regarding the potential effects of a fuel or fuel additive on the performance of emission control equipment.

(3) A manufacturer or group may be required to conduct biological and/or exposure studies at the Tier 3 level to evaluate directly the potential public welfare or environmental effects of the emissions of a fuel or additive, if significant concerns about such effects arise as a result of EPA's review of the literature search or emission characterization findings in Tier 1 or the results of the toxicological tests in Tier 2.

(4) With regard to group submittals, Tier 3 studies on a fuel or additive product(s) other than the originally specified group representative may be required if specific differences in the product's composition indicate that its emissions may have different toxicologic properties from those of the original group representative.

(5) Additional emission characterization and/or toxicologic tests may be required to evaluate the impact of different vehicle, engine, or emission control technologies on the observed composition or health or welfare effects of the emissions of a fuel or additive.

(6) Toxicological tests on individual emission products may be required.

(7) Upon review of information submitted for an aerosol product under § 79.58(e), emissions characterization, exposure, and/or toxicologic testing at a Tier 3 level may be required.

(8) A manufacturer which qualifies for and has elected to use the special provisions for the products of small businesses (pursuant to § 79.58(d)) may be required to conduct emission characterization, exposure, and /or toxicologic studies at the Tier 3 level for such products, as specified in § 79.58(d)(4).

(9) The examples of potential Tier 3 tests described in this section do not in any way limit EPA's broad discretion and authority under Tier 3.

§ 79.55 Base fuel specifications.

(a) *General Characteristics.* (1) The base fuel(s) in each fuel family shall serve as the group representative(s) for the baseline group(s) in each fuel family pursuant to § 79.56. Also, as specified in § 79.51(h)(1), for fuel additives undergoing testing, the designated base fuel for the respective fuel family shall serve as the substrate in which the additive shall be mixed prior to the generation of emissions.

(2) Base fuels shall contain a limited complement of the additives which are essential for the fuel's production or distribution and/or for the successful operation of the test vehicle/engine throughout the mileage accumulation and emission generation periods. Such additives shall be used at the minimum effective concentration-in-use for the base fuel in question.

(3) Unless otherwise restricted, the presence of trace contaminants does not preclude the use of a fuel or fuel additive as a component of a base fuel formulation.

(4) When an additive is the test subject, any additive normally contained in the base fuel which serves the same function as the subject additive shall be removed from the base fuel formulation. For example, if a corrosion inhibitor were the subject of testing and if this additive were to be tested in a base fuel which normally contained a corrosion inhibitor, this test additive would replace the corrosion inhibitor normally included as a component of the base fuel.

(5) Additive components of the methanol, ethanol, methane, and propane base fuels in addition to any such additives included below shall be limited to those recommended by the manufacturers of the vehicles and/or engines used in testing such fuels. For this purpose, EPA will review requests from manufacturers (or their agents) to modify the additive specifications for the alternative fuels and, if necessary, EPA shall change these specifications based on consistency of those changes with the associated vehicle manufacturer's recommendations for the operation of the vehicle. EPA shall publish notice of any such changes to a base fuel and/or its base additive package specifications in the FEDERAL REGISTER.

(b) *Gasoline Base Fuel.* (1) The gasoline base fuel is patterned after the reformulated gasoline summer baseline fuel as specified in CAA section 211(k)(10)(B)(i). The specifications and blending tolerances for the gasoline base fuel are listed in Table F94–1. The additive types which shall be required and/or permissible in the gasoline base fuel are listed in Table 1 as well.

TABLE F94–1.—GASOLINE BASE FUEL PROPERTIES

API Gravity	57.4±0.3
Sulfur, ppm	339±25
Benzene, vol%	1.53±0.3
RVP, psi	8.7±0.3
Octane, (R+M)/2	87.3±0.5
Distillation Parameters:	
10%, °F	128±5
50%, °F	218±5
90%, °F	330±5
Aromatics, vol%	32.0±2.7
Olefins, vol%	9.2±2.5
Saturates, vol%	58.8±2.0
Additive Types:	
Required	Deposit Control Corrosion Inhibitor Demulsifier Anti-oxidant Metal Deactivator
Permissible	Anti-static

(2) The additive components of the gasoline base fuel shall contain compounds comprised of no elements other than carbon, hydrogen, oxygen, nitrogen, and sulfur. Additives shall be used at the minimum concentration needed to perform effectively in the gasoline base fuel. In no case shall their concentration in the base fuel exceed the maximum concentration recommended by the additive manufacturer. The increment of sulfur contributed to the formulation by any additive shall not exceed 15 parts per million sulfur by weight and shall not cause the gasoline base fuel to exceed the sulfur specifications in Table F94–1 of this section.

(c) *Diesel Base Fuel.* (1) The diesel base fuel shall be a #2 diesel fuel having the properties and blending tolerances shown in Table F94–2 of this section. The additive types which shall be permissible in diesel base fuel are presented in Table F94–2 as well.

TABLE F94–2.—DIESEL BASE FUEL PROPERTIES

API Gravity	33±1
Sulfur, wt%	0.05±0.0025
Cetane Number	45.2±2
Cetane Index	45.7±2
Distillation Parameters:	
10%, °F	433±5
50%, °F	516±5
90%, °F	606±5
Aromatics, vol%	38.4±2.7
Olefins, vol%	1.5±0.4
Saturates, vol%	60.1±2.0
Additive Types:	
Required	Corrosion Inhibitor
	Demulsifier
	Anti-oxidant
	Metal Deactivator
Permitted	Anti-static
	Flow Improver
Not Permitted	Deposit Control

(2) The additive components of the diesel base fuel shall contain compounds comprised of no elements other than carbon, hydrogen, oxygen, nitrogen, and sulfur. Additives shall be used at the minimum concentration needed to perform effectively in the diesel base fuel. In no case shall their concentration in the base fuel exceed the maximum concentration recommended by the additive manufacturer. The increment of sulfur contributed to the base fuel by additives shall not cause the diesel base fuel to exceed the sulfur specifications in Table F94–2 of this section.

(d) *Methanol Base Fuels.* (1) The methanol base fuels shall contain no elements other than carbon, hydrogen, oxygen, nitrogen, sulfur, and chlorine.

(2) The M100 base fuel shall consist of 100 percent by volume chemical grade methanol.

(3) The M85 base fuel is to contain 85 percent by volume chemical grade methanol, blended with 15 percent by volume gasoline base fuel meeting the gasoline base fuel specifications outlined in paragraph (b)(1) of this section. Manufacturers shall ensure the methanol compatibility of lubricating oils as well as fuel additives used in the gasoline portion of the M85 base fuel.

(4) The methanol base fuels shall meet the specifications listed in Table F94–3.

TABLE F94–3.—METHANOL BASE FUEL PROPERTIES

M100:	
Chemical Grade MeOH, vol%	100
Chlorine (as chlorides), wt%, max	0.0001
Water, wt%, max	0.5
Sulfur, wt%, max	0.002
M85	
Chemical Grade MeOH, vol%,	85
Gasoline Base Fuel, vol%	15
Chlorine (as chlorides), wt%, max	0.0001
Water, wt%, max	0.5
Sulfur, wt%, max	0.004

(e) *Ethanol Base Fuel.* (1) The ethanol base fuel, E85, shall contain no elements other than carbon, hydrogen, oxygen, nitrogen, sulfur, chlorine, and copper.

(2) The ethanol base fuel shall contain 85 percent by volume chemical grade ethanol, blended with 15 percent by volume gasoline base fuel that meets the specifications listed in paragraph (b)(1) of this section. Additives used in the gasoline component of E85 shall be ethanol-compatible.

(3) The ethanol base fuel shall meet the specifications listed in Table F94–4.

TABLE F94–4.—ETHANOL BASE FUEL PROPERTIES

E85:	
Chemical Grade EtOH, vol%, min	85
Gasoline Base Fuel, vol%	15
Chlorine (as chloride), wt%, max	0.0004
Copper, mg/L, max	0.07
Water, wt%, max	0.5
Sulfur, wt%, max	0.004

(f) *Methane Base Fuel.* (1) The methane base fuel is a gaseous motor vehicle fuel marketed commercially as compressed natural gas (CNG), whose primary constituent is methane.

(2) The methane base fuel shall contain no elements other than carbon, hydrogen, oxygen, nitrogen, and sulfur. The fuel shall contain an odorant additive for leak detection purposes. The added odorant shall be used at a level such that, at ambient conditions, the fuel must have a distinctive odor potent enough for its presence to be detected down to a concentration in air of not over ⅕ (one-fifth) of the lower

limit of flammability. After addition of the odorant, the methane base fuel shall contain no more than 16 ppm sulfur by volume.

(3) The methane base fuel shall meet the specifications listed in Table F94–5.

TABLE F94–5.—METHANE BASE FUEL SPECIFICATIONS

Methane, mole%, min	89.0
Ethane, mole%, max	4.5
Propane and higher HC, mole%, max	2.3
C6 and higher HC, mole%, max	0.2
Oxygen, mole%, max	0.6
Sulfur (including odorant additive) ppmv, max	16
Inert gases:	
Sum of CO_2 and N_2, mole%, max	4.0

(g) *Propane Base Fuel.* (1) The propane base fuel is a gaseous motor vehicle fuel, marketed commercially as liquified petroleum gas (LPG), whose primary constituent is propane.

(2) The propane base fuel may contain no elements other than carbon, hydrogen, oxygen, nitrogen, and sulfur. The fuel shall contain an odorant additive for leak detection purposes. The added odorant shall be used at a level such that at ambient conditions the fuel must have a distinctive odor potent enough for its presence to be detected down to a concentration in air of not over ⅕ (one-fifth) of the lower limit of flammability. After addition of the odorant, the propane base fuel shall contain no more than 120 ppm sulfur by weight.

(3) The propane base fuel shall meet the specifications listed in Table F94–6.

TABLE F94—6.—PROPANE BASE FUEL SPECIFICATIONS

Vapor pressure at 100–F, psig, max	208
Evaporative temperature, 95%, °F, max..	−37
Propane, vol%, min	92.5
Propylene, vol%, max	5.0
Butane and heavier, vol%, max	2.5
Residue-evaporation of 100mL, max, mL	0.05
Sulfur (including odorant additive) ppmw, max.	123

§ 79.56 Fuel and fuel additive grouping system.

(a) Manufacturers of fuels and fuel additives are allowed to satisfy the testing requirements in §§ 79.52, 79.53, and 79.54 and the associated reporting requirements in § 79.59 on an individual or group basis, provided that such products meet the criteria in this section for enrollment in the same fuel/additive group. However, each manufacturer of a fuel or fuel additive must individually comply with the notification requirements of § 79.59(b). Further, if a manufacturer elects to comply by participation in a group, each manufacturer continues to be individually subject to the information requirements of this subpart.

(1) The use of the grouping provision to comply with Tier 1 and Tier 2 testing requirements is voluntary. No manufacturer is prohibited from testing and submitting its own data for its own product registration, despite its qualification for membership in a particular group.

(2) The only groups permitted are those established in this section.

(b) Each manufacturer who chooses to enroll a fuel or fuel additive in a group of similar fuels and fuel additives as designated in this section may satisfy the registration requirements through a group submission of jointly-sponsored testing and analysis conducted on a product which is representative of all products in that group, provided that the group representative is chosen according to the specifications in this section.

(1) The health effects information submitted by a group shall be considered applicable to all fuels and fuel additives in the group. A fuel or fuel additive manufacturer who has chosen to participate in a group may subsequently choose to perform testing of such fuel or fuel additive on an individual basis; however, until such independent registration information has been received and reviewed by EPA, the information initially submitted by the group on behalf of the manufacturer's fuel or fuel additive shall be considered applicable and valid for that fuel or fuel additive. It could therefore be used to support requirements for further testing under the provisions of Tier 3 or to support regulatory decisions affecting that fuel or fuel additive.

(2) Manufacturers are responsible for determining the appropriate groups for their products according to the criteria in this section and for enrolling their

products into those groups under industry-sponsored or other independent brokering arrangements.

(3) Manufacturers who enroll a fuel or fuel additive into a group shall share the applicable costs according to appropriate arrangements established by the group. The organization and administration of group functions and the development of cost-sharing arrangements are the responsibility of the participating manufacturers. If manufacturers are unable to agree on fair and equitable cost sharing arrangements and if such dispute is referred by one or more manufacturers to EPA for resolution, then the provisions in § 79.56(c) (1) and (2) shall apply.

(c) In complying with the registration requirements for a given fuel or fuel additive, notwithstanding the enrollment of such fuel or additive in a group, a manufacturer may make use of available information for any product which conforms to the same grouping criteria as the given product. If, for this purpose, a manufacturer wishes to rely upon the information previously submitted by another manufacturer (or group of manufacturers) for registration of a similar product (or group of products), then the previous submitter is entitled to reimbursement by the manufacturer for an appropriate portion of the applicable costs incurred to obtain and report such information. Such entitlement shall remain in effect for a period of fifteen years following the date on which the original information was submitted. Pursuant to § 79.59(b)(4)(ii), the manufacturer who relies on previously-submitted registration data shall certify to EPA that the original submitter has been notified and that appropriate reimbursement arrangements have been made.

(1) When private efforts have failed to resolve a dispute about a fair amount or method of cost-sharing or reimbursement for testing costs incurred under this subpart, then any party involved in that dispute may initiate a hearing by filing two signed copies of a request for a hearing with a regional office of the American Arbitration Association and mailing a copy of the request to EPA. A copy must also be sent to each person from whom the filing party seeks reimbursement or who seeks reimbursement from that

party. The information and fees to be included in the request for hearing are specified in 40 CFR 791.20(b) and (c).

(2) Additional procedures and requirements governing the hearing process are those specified in 40 CFR 791.22 through 791.50, 791.60, 791.85, and 791.105, excluding 40 CFR 791.39(a)(3) and 791.48(d).

(d) *Basis for Classification.* (1) Rather than segregating fuels and fuel additives into separate groups, the grouping system applies the same grouping criteria and creates a single set of groups applicable both to fuels and fuel additives.

(2) Fuels shall be classified pursuant to § 79.56(e) into categories and groups of similar fuels and fuel additives according to the components and characteristics of such fuels in their uncombusted state. The classification of a fuel product must take into account the components of all bulk fuel additives which are listed in the registration application or basic registration data submitted for the fuel product.

(3) Fuel additives shall be classified pursuant to § 79.56(e) into categories and groups of similar fuels and fuel additives according to the components and characteristics of the respective uncombusted additive/base fuel mixture pursuant to § 79.51(h)(1).

(4) In determining the category and group to which a fuel or fuel additive belongs, impurities present in trace amounts shall be ignored unless otherwise noted. Impurities are those substances which are present through contamination or which remain in the fuel or additive naturally after processing is completed.

(5) *Reference Standards.* (i) American Society for Testing and Materials (ASTM) standard D 4814–93a, ''Standard Specification for Automotive Spark-Ignition Engine Fuel'', used to define the general characteristics of gasoline fuels (paragraph (e)(3)(i)(A)(3) of this section) and ASTM standard D 975–93, ''Standard Specification for Diesel Fuel Oils'', used to define the general characteristics of diesel fuels (paragraph (e)(3)(ii)(A)(3) of this section) have been incorporated by reference.

(ii) This incorporation by reference was approved by the Director of the Federal Register in accordance with 5 U.S.C. 552(a) and 1 CFR part 51. Copies may be obtained from the American Society for Testing and Materials (ASTM), 1916 Race Street, Philadelphia, PA 19103. Copies may be inspected at U.S. EPA, OAR, 401 M Street SW., Washington, DC, 20460 or at the Office of the Federal Register, 800 North Capitol Street NW., suite 700, Washington, DC.

(e) *Grouping Criteria.* The grouping system is represented by a matrix of three fuel/additive categories within six specified fuel families (see Table F94–7, Grouping System for Fuels and Fuel Additives). Each category may include one or more groups. Within each group, a representative may be designated based on the criteria in this section and joint registration information may be developed and submitted for member fuels and fuel additives.

Table F94–7.—GROUPING SYSTEM FOR FUELS AND FUEL ADDITIVES

Category	Conventional Fuel Families		Alternative Fuel Families			
	Gasoline (A)	Diesel (B)	Methanol (C)	Ethanol (D)	Methane (CNG, LNG) (E)	Propane (LPG) (F)
Baseline	One group represented by gasoline base fuel.	One group represented by diesel base fuel.	Two groups: (1) M100 group (includes methanol-gasoline formulations with at least 96% methanol) represented by M100 base fuel (2) M85 (includes methanol-gasoline formulations with 50–95% methanol) represented by M85 base fuel.	One group (includes ethanol-gasoline formulations with at least 50% ethanol) represented by E85 base fuel.	One group (includes both CNG and LNG), represented by CNG base fuel.	One group represented by LPG base fuel.
Non-baseline	One group for each gasoline-oxygenate blend or each gasoline-methanol/co-solvent blend; one group for each synthetic crude-derived fuel.	One group for each oxygen-contributing compound or class of compounds; one group for each synthetic crude-derived fuel.	One group for each individual non-methanol, non-gasoline component and one group for each unique combination of such components.	One group for each individual non-ethanol, non-gasoline component and one group for each unique combination of such components.	One group to include methane formulations exceeding the specified limit for non-methane hydrocarbons.	One group to include propane formulations exceeding the specified limit for butane and higher hydrocarbons.
Atypical	One group for each atypical element/characteristic, or unique combination of atypical elements/characteristics.	One group for each atypical element/characteristic, or unique combination of atypical elements/characteristics.	One group for each atypical element/characteristic, or unique combination of atypical elements/characteristics.	One group for each atypical element/characteristic, or unique combination of atypical elements/characteristics.	One group for each atypical element/characteristic, or unique combination of atypical elements/characteristics.	One group for each atypical element/characteristic, or unique combination of atypical elements/characteristics.

(1) *Fuel Families.* Each of the following six fuel families (Table F94–7, columns A–F) includes fuels of the type referenced in the name of the family as well as bulk and aftermarket additives which are intended for use in those fuels. When applied to fuel additives, the criteria in these descriptions refer to the associated additive/base fuel mixture, pursuant to § 79.51(h)(1). One or more base fuel formulations are specified for each fuel family pursuant to § 79.55.

(i) The Gasoline Family includes fuels composed of more than 50 percent gasoline by volume and their associated fuel additives. The base fuel for this family is specified in § 79.55(b).

(ii) The Diesel Family includes fuels composed of more than 50 percent diesel fuel by volume and their associated fuel additives. The Diesel fuel family includes both Diesel #1 and Diesel #2 formulations. The base fuel for this family is specified in § 79.55(c).

(iii) The Methanol Family includes fuels composed of at least 50 percent methanol by volume and their associated fuel additives. The M100 and M85 base fuels are specified in § 79.55(d).

(iv) The Ethanol Family includes fuels composed of at least 50 percent ethanol by volume and their associated fuel additives. The base fuel for this family is E85 as specified in § 79.55(e).

(v) The Methane Family includes compressed natural gas (CNG) and liquefied natural gas (LNG) fuels containing at least 50 mole percent methane and their associated fuel additives. The base fuel for the family is a CNG formulation specified in § 79.55(f).

(vi) The Propane Family includes propane fuels containing at least 50 percent propane by volume and their associated fuel additives. The base fuel for this family is a liquefied petroleum gas (LPG) as specified in § 79.55(g).

(vii) A manufacturer seeking registration for formulation(s) which do not fit the criteria for inclusion in any of the fuel families described in this section shall contact EPA at the address in § 79.59(a)(1) for further guidance in classifying and testing such formulation(s).

(2) *Fuel/Additive Categories.* Fuel/additive categories (Table F94–7, rows 1–3) are subdivisions of fuel families which represent the degree to which fuels and fuel additives in the family resemble the base fuel(s) designated for the family. Three general category types are defined in this section. When applied to fuel additives, the criteria in these descriptions refer to the associated additive/base fuel mixture, pursuant to § 79.51(h)(1).

(i) Baseline categories consist of fuels and fuel additives which contain no elements other than those permitted in the base fuel for the respective fuel family and conform to specified limitations on the amounts of certain components or characteristics applicable to that fuel family.

(ii) Non-Baseline Categories consist of fuels and fuel additives which contain no elements other than those permitted in the base fuel for the respective fuel family, but which exceed one or more of the limitations for certain specified components or characteristics applicable to baseline formulations in that fuel family.

(iii) Atypical Categories consist of fuels and fuel additives which contain elements or classes of compounds other than those permitted in the base fuel for the respective fuel family or which otherwise do not meet the criteria for either baseline or non-baseline formulations in that fuel family. A fuel or fuel additive product having both non-baseline and atypical characteristics pursuant to § 79.56(e)(3), shall be considered to be an atypical product.

(3) This section defines the specific categories applicable to each fuel family. When applied to fuel additives, the criteria in these descriptions refer to the associated additive/base fuel mixture, pursuant to § 79.51(h)(1).

(i) *Gasoline Categories.* (A) The Baseline Gasoline category contains gasoline fuels and associated additives which satisfy all of the following criteria:

(*1*) Contain no elements other than carbon, hydrogen, oxygen, nitrogen, and/or sulfur.

(*2*) Contain less than 1.5 percent oxygen by weight.

(*3*) Sulfur concentration is limited to 1000 ppm per the specifications cited in the following paragraph.

(*4*) Possess the physical and chemical characteristics of unleaded gasoline as

specified by ASTM standard D 4814–93a (incorporated by reference, pursuant to paragraph (d)(5) of this section), in at least one Seasonal and Geographical Volatility Class.

(*5*) Derived only from conventional petroleum, heavy oil deposits, coal, tar sands, and/or oil sands.

(B) The Non-Baseline Gasoline category is comprised of gasoline fuels and associated additives which conform to the specifications in paragraph (e)(3)(i)(A) of this section for the Baseline Gasoline category except that they contain 1.5 percent or more oxygen by weight and/or may be derived from sources other than those listed in paragraph (e)(3)(i)(A)(*5*) of this section.

(C) The Atypical Gasoline category is comprised of gasoline fuels and associated additives which contain one or more elements other than carbon, hydrogen, oxygen, nitrogen, and sulfur.

(ii) *Diesel Categories.* (A) The Baseline Diesel category is comprised of diesel fuels and associated additives which satisfy all of the following criteria:

(*1*) Contain no elements other than carbon, hydrogen, oxygen, nitrogen, and/or sulfur. Pursuant to 40 CFR 80.29, highway diesel sold after October 1, 1993 shall contain 0.05 percent or less sulfur by weight;

(*2*) Contain less than 1.0 percent oxygen by weight;

(*3*) Diesel formulations containing more than 0.05 percent sulfur by weight are precluded by 40 CFR 80.29;

(*4*) Possess the characteristics of diesel fuel as specified by ASTM standard D 975–93 (incorporated by reference, pursuant to paragraph (d)(5) of this section); and

(*5*) Derived only from conventional petroleum, heavy oil deposits, coal, tar sands, and/or oil sands.

(B) The Non-Baseline Diesel category is comprised of diesel fuels and associated additives which conform to the specifications in paragraph (e)(3)(ii)(A) of this section for the Baseline Diesel category except that they contain 1.0 percent or more oxygen by weight and/or may be derived from sources other than those listed in paragraph (e)(3)(ii)(A)(*5*) of this section.

(C) The Atypical Diesel category is comprised of diesel fuels and associated additives which contain one or more elements other than carbon, hydrogen, oxygen, nitrogen, and sulfur.

(iii) *Methanol Categories.* (A) The Baseline Methanol category is comprised of methanol fuels and associated additives which contain at least 50 percent methanol by volume, no more than 4.0 percent by volume of substances other than methanol and gasoline, and no elements other than carbon, hydrogen, oxygen, nitrogen, sulfur, and/or chlorine. Baseline methanol shall contain no more than 0.004 percent by weight of sulfur or 0.0001 percent by weight of chlorine.

(B) The Non-Baseline Methanol category is comprised of fuel blends which contain at least 50 percent methanol by volume, more than 4.0 percent by volume of a substance(s) other than methanol and gasoline, and meet the baseline limitations on elemental composition in paragraph (e)(3)(iii)(A) of this section.

(C) The Atypical Methanol category consists of methanol fuels and associated additives which do not meet the criteria for either the Baseline or the Non-Baseline Methanol category.

(iv) *Ethanol Categories.* (A) The Baseline Ethanol category is comprised of ethanol fuels and associated additives which contain at least 50 percent ethanol by volume, no more than five (5) percent by volume of substances other than ethanol and gasoline, and no elements other than carbon, hydrogen, oxygen, nitrogen, sulfur, chlorine, and copper. Baseline ethanol formulations shall contain no more than 0.004 percent by weight of sulfur, 0.0004 percent by weight of chlorine, and/or 0.07 mg/L of copper.

(B) The Non-Baseline Ethanol category is comprised of fuel blends which contain at least 50 percent ethanol by volume, more than five (5) percent by volume of a substance(s) other than ethanol and gasoline, and meet the baseline limitations on elemental composition in paragraph (e)(3)(iv)(A) of this section.

(C) The Atypical Ethanol category consists of ethanol fuels and associated additives which do not meet the criteria for either the Baseline or the Non-Baseline Ethanol categories.

(v) *Methane Categories.* (A) The Baseline Methane category is comprised of

methane fuels and associated additives (including at least an odorant additive) which contain no elements other than carbon, hydrogen, oxygen, nitrogen, and/or sulfur, and contain no more than 20 mole percent non-methane hydrocarbons. Baseline methane formulations shall not contain more than 16 ppm by volume of sulfur, including any sulfur which may be contributed by the odorant additive.

(B) The Non-Baseline Methane category consists of methane fuels and associated additives which conform to the specifications in paragraph (e)(3)(v)(A) of this section for the Baseline Methane category except that they exceed 20 mole percent non-methane hydrocarbons.

(C) The Atypical Methane category consists of methane fuels and associated additives which contain one or more elements other than carbon, hydrogen, oxygen, nitrogen, and/or sulfur, or exceed 16 ppm by volume of sulfur.

(vi) *Propane Categories.* (A) The Baseline Propane category is comprised of propane fuels and associated additives (including at least an odorant additive) which contain no elements other than carbon, hydrogen, oxygen, nitrogen, and/or sulfur, and contain no more than 20 percent by volume non-propane hydrocarbons. Baseline Propane formulations shall not contain more than 123 ppm by weight of sulfur, including any sulfur which may be contributed by the odorant additive.

(B) The Non-Baseline Propane category consists of propane fuels and associated additives which conform to the specifications in paragraph (e)(3)(vi)(A) of this section for the Baseline Propane category, except that they exceed the 20 percent by volume limit for butane and higher hydrocarbons.

(C) The Atypical Propane category consists of propane fuels and associated additives which contain elements other than carbon, hydrogen, oxygen, nitrogen, and/or sulfur, or exceed 123 ppm by weight of sulfur.

(4) *Fuel/Additive Groups.* Fuel/additive groups are subdivisions of the fuel/additive categories. One or more group(s) are defined within each category in each fuel family according to the presence of differing characteristics in the fuel or additive/base fuel mixture. For each group, one formulation (either a base fuel or a member fuel or additive product) is chosen to represent all the member products in the group in any tests required under this subpart. The section which follows describes the fuel/additive groups.

(i) *Baseline Groups.* (A) The Baseline Gasoline category comprises a single group. The gasoline base fuel specified in § 79.55(b) shall serve as the representative of this group.

(B) The Baseline Diesel category comprises a single group. The diesel base fuel specified in § 79.55(c) shall serve as the representative of this group.

(C) The Baseline Methanol category includes two groups: M100 and M85. The M100 group consists of methanol-gasoline formulations containing at least 96 percent methanol by volume. These formulations must contain odorants and bitterants (limited in elemental composition to carbon, hydrogen, oxygen, nitrogen, sulfur, and chlorine) for prevention of purposeful or inadvertent consumption. The M100 base fuel specified in § 79.55(d) shall serve as the representative for this group. The M85 group consists of methanol-gasoline formulations containing at least 50 percent by volume but less than 96 percent by volume methanol. The M85 base fuel specified in § 79.55(d) shall serve as the representative of this group.

(D) The Baseline Ethanol category comprises a single group. The E85 base fuel specified in § 79.55(e) shall serve as the representative of this group.

(E) The Baseline Methane category comprises a single group. The CNG base fuel specified in § 79.55(f) shall serve as the representative of this group.

(F) The Baseline Propane category comprises a single group. The LPG base fuel specified in § 79.55(g) shall serve as the representative of this group.

(ii) *Non-Baseline Groups*—(A) *Non-Baseline Gasoline.* The Non-Baseline gasoline fuels and associated additives shall sort into groups according to the following criteria:

(*1*) For gasoline fuel and additive products which contain 1.5 percent oxygen by weight or more, a separate non-

baseline gasoline group shall be defined by each oxygenate compound or methanol/co-solvent blend listed as a component in the registration application or basic registration data of any such fuel or additive.

(*i*) Examples of oxygenates occurring in non-baseline gasoline formulations include ethanol, methyl tertiary butyl ether (MTBE), ethyl tertiary butyl ether (ETBE), tertiary amyl methyl ether (TAME), diisopropyl ether (DIPE), dimethyl ether (DME), tertiary amyl ethyl ether (TAEE), and any other compound(s) which increase the oxygen content of the gasoline formulation. A separate non-baseline gasoline group is defined for each such oxygenating compound.

(*ii*) Each unique methanol and co-solvent combination (whether one, two, or more additional oxygenate compounds) used in a non-baseline fuel shall also define a separate group. An oxygenate compound used as a co-solvent for methanol in a non-baseline gasoline formulation must be identified as such in its registration. If the oxygenate is not identified as a methanol co-solvent, then the compound shall be regarded by EPA as defining a separate non-baseline gasoline group. Examples of methanol/co-solvent combinations occurring in non-baseline gasoline formulations include methanol/isopropyl alcohol, methanol/butanol, and methanol with alcohols up to C8/octanol (Octamix).

(*iii*) For each such group, the representative to be used in testing shall be a formulation consisting of the gasoline base fuel blended with the relevant oxygenate compound (or methanol/co-solvent combination) in an amount equivalent to the highest actual or recommended concentration-in-use of the oxygenate (or methanol/co-solvent combination) recorded in the basic registration data of any member fuel or additive product. In the event that two or more products in the same group contain the same and highest amount of the oxygenate or methanol/co-solvent blend, then the representative shall be chosen at random for such candidate products.

(*2*) An oxygenate compound or methanol/co-solvent combination to be blended with the gasoline base fuel for testing purposes shall be chemical-grade quality, at a minimum, and shall not contain a significant amount of other contaminating oxygenate compounds.

(*3*) Separate non-baseline gasoline groups shall also be defined for gasoline formulations derived from each particular petroleum source not listed in paragraph (e)(3)(i)(A)(*5*) of this section.

(*i*) Such groups may include, but are not limited to, those derived from shale, used oil, waste plastics, and other recycled chemical/petrochemical products.

(*4*) Pursuant to § 79.51(i), non-baseline gasoline products may belong to more than one fuel/additive group.

(B) *Non-Baseline Diesel.* The Non-Baseline diesel fuels and associated additives shall sort into groups according to the following criteria:

(*1*) For diesel fuel and additive products which contain 1.0 percent or more oxygen by weight in the form of alcohol(s) and/or ether(s):

(*i*) A separate non-baseline diesel group shall be defined by each individual alcohol or ether listed as a component in the registration application or basic registration data of any such fuel or additive.

(*ii*) For each such group, the representative to be used in testing shall be a formulation consisting of the diesel base fuel blended with the relevant alcohol or ether in an amount equivalent to the highest actual or recommended concentration-in-use of the alcohol or ether recorded in the basic registration data of any member fuel or additive product.

(*2*) A separate non-baseline diesel group is also defined for each of the following classes of oxygenating compounds: mixed nitroso-compounds; mixed nitro-compounds; mixed alkyl nitrates; mixed alkyl nitrites; peroxides; furans; mixed alkyl esters of plant and/or animal origin (biodiesel). For each such group, the representative to be used in testing shall be formulated as follows:

(*i*) From the class of compounds which defines the group, a particular oxygenate compound shall be chosen from among all such compounds recorded in the registration application

or basic registration data of any fuel or additive in the group.

(*ii*) The selected compound shall be the one recorded in any member product's registration application with the highest actual or recommended maximum concentration-in-use.

(*iii*) In the event that two or more oxygenate compounds in the relevant class have the highest recorded concentration-in-use, then the oxygenate compound to be used in the group representative shall be chosen at random from the qualifying candidate compounds.

(*iv*) The compound thus selected shall be the group representative, and shall be used in testing at the following concentration:

(*A*) For biodiesel groups, the representative shall be 100 percent biodiesel fuel.

(*B*) Otherwise, the group representative shall be the selected compound mixed into diesel base fuel at the maximum recommended concentration-in-use.

(*3*) Separate non-baseline diesel groups shall also be defined for diesel formulations derived from each particular petroleum source not listed in paragraph (e)(3)(i)(A)(*5*) of this section.

(*i*) Such groups may include, but are not limited to, those derived from shale, used oil, waste plastics, and other recycled chemical/petrochemical products.

(*ii*) In any such group, the first product to be registered or to apply for EPA registration shall be the representative of that group. If two or more products are registered or apply for first registration simultaneously, then the representative shall be chosen by a random method from among such candidate products.

(*4*) Pursuant to § 79.51(i), non-baseline diesel products may belong to more than one fuel/additive group.

(C) *Non-Baseline Methanol.* The Non-Baseline methanol formulations are sorted into groups based on the non-methanol, non-gasoline component(s) of the blended fuel. Each such component occurring separately and each unique combination of such components shall define a separate group.

(*1*) The representative of each such non-baseline methanol group shall be the group member with the highest percent by volume of non-methanol, non-gasoline component(s).

(*2*) In case two or more such members have the same and highest concentration of non-methanol, non-gasoline component(s), the representative of the group shall be chosen at random from among such equivalent member products.

(D) *Non-Baseline Ethanol.* The Non-Baseline ethanol formulations are sorted into groups based on the non-ethanol, non-gasoline component(s) of the blended fuel. Each such component occurring separately and each unique combination of such components shall define a separate group.

(*1*) The representative of each such non-baseline ethanol group shall be the group member with the highest percent by volume of non-ethanol, non-gasoline component(s).

(*2*) In case two or more such members have the same and highest concentration of non-ethanol, non-gasoline component(s), the representative of the group shall be chosen at random from among such equivalent member products.

(E) *Non-Baseline Methane.* The Non-Baseline methane category consists of one group. The group representative shall be the member fuel or fuel/additive formulation containing the highest concentration-in-use of non-methane hydrocarbons. If two or more member products have the same and the highest concentration-in-use, then the representative shall be chosen at random from such products.

(F) *Non-Baseline Propane.* The Non-Baseline propane category consists of one group. The group representative shall be the member fuel or fuel/additive formulation containing the highest concentration-in-use of butane and higher hydrocarbons. If two or more products have the same and the highest concentration-in-use, then the representative shall be chosen at random from such products.

(iii) *Atypical groups.*

(A) As defined for each individual fuel family in § 79.56(e)(3), fuels and additives meeting any one of the following criteria are considered atypical.

(*1*) Gasoline Atypical fuels and additives contain one or more elements in

addition to carbon, hydrogen, oxygen, nitrogen, and sulfur.

(*2*) Diesel Atypical fuels and additives contain one or more element in addition to carbon, hydrogen, oxygen, nitrogen, and sulfur.

(*3*) Methanol Atypical fuels and additives contain:

(*i*) one or more element in addition to carbon, hydrogen, oxygen, nitrogen, sulfur, and chlorine, and/or

(*ii*) sulfur in excess of 0.004 percent by weight, and/or

(*iii*) chlorine in excess of 0.0001 percent by weight.

(*4*) Ethanol Atypical fuels and additives contain:

(*i*) one or more element in addition to carbon, hydrogen, oxygen, nitrogen, sulfur, chlorine, and copper, and/or

(*ii*) sulfur in excess of 0.004 percent by weight, and/or

(*iii*) contain chlorine (as chloride) in excess of 0.0004 percent by weight, and/or

(*iv*) contain copper in excess of 0.07 mg/L.

(*5*) Methane Atypical fuels and additives contain:

(*i*) one or more element in addition to carbon, hydrogen, oxygen, nitrogen, and sulfur, and/or

(*ii*) sulfur in excess of 16 ppm by volume.

(*6*) Propane Atypical fuels and additives contain:

(*i*) one or more element in addition to carbon, hydrogen, oxygen, nitrogen, and sulfur, and/or

(*ii*) sulfur in excess of 123 ppm by weight.

(B) General rules for sorting these atypical fuels and additives into separate groups are as follows:

(*1*) Pursuant to § 79.51(j), a given atypical product may belong to more than one atypical group.

(*2*) Fuels and additives in different fuel families may not be grouped together, even if they contain the same atypical element(s) or other atypical characteristic(s).

(*3*) A fuel or additive containing one or more atypical elements attached to a polymer compound must be sorted into a separate group from atypical fuels or fuel additives containing the same atypical element(s) in non-polymer form. However, the occurrence of a polymer compound which does not contain an atypical element does not affect the grouping of a fuel or additive.

(C) Specific rules for sorting each family's atypical fuels and additives into separate groups, and for choosing each such group's representative for testing, are as follows:

(*1*) A separate group is created for each atypical element (or other atypical characteristic) occurring separately, *i.e.*, in the absence of any other atypical element or characteristic, in one or more fuels and/or additives within a given fuel family.

(*i*) Consistent with the basic grouping guidelines provided in § 79.56(d), a fuel product which is classified as atypical because its basic registration data or application lists a bulk additive containing an atypical characteristic, may be grouped with that additive and/or with other fuels and additives containing the same atypical characteristic.

(*ii*) Within a group of products containing only one atypical element or characteristic, the fuel or additive/base fuel mixture with the highest concentration-in-use or recommended concentration-in-use of the atypical element or characteristic shall be the designated representative of that group. In the event that two or more fuels or additive/base fuel mixtures within the group contain the same and highest concentration of the single atypical element or characteristic, then the group representative shall be selected by a random method from among such candidate products.

(*2*) A separate group is also created for each unique combination of atypical elements (and/or other specified atypical characteristics) occurring together in one or more fuels and/or additives within a given fuel family.

(*i*) Consistent with the basic grouping guidelines provided in § 79.56(d), a fuel which is classified as atypical because its basic registration data lists one bulk additive containing two or more atypical characteristics, may be grouped with that additive and/or with other fuels and/or additives containing the same combination of atypical characteristics. Grouping of fuels containing more than one atypical additive shall be guided by provisions of § 79.51(j).

(*ii*) Within a group of such products containing a unique combination of two or more atypical elements or characteristics, the designated representative shall be the product within the group which contains the highest total concentration of the atypical elements or characteristics.

(*iii*) In the event that two or more products within a given atypical group contain the same and highest concentration of the same atypical elements or characteristics then, among such candidate products, the designated representative shall be the product which, first, has the highest total concentration of metals, followed in order by highest total concentration of halogens, highest total concentration of other atypical elements (including sulfur concentration, as applicable), highest total concentration of polymers containing atypical elements, and, lastly, highest total concentration of oxygen.

(*iv*) If two or more products have the same and highest concentration of the variable identified in the preceding paragraph, then, among such products, the one with the greatest concentration of the next highest variable on the list shall be the group representative.

(*v*) This decision-making process shall continue until a single product is determined to be the representative. If two or more products remain tied at the end of this process, then the representative shall be chosen by a random method from among such remaining products.

[59 FR 33093, June 27, 1994, as amended at 62 FR 12571, Mar. 17, 1997]

§ 79.57 Emission generation.

This section specifies the equipment and procedures that must be used in generating the emissions which are to be subjected to the characterization procedures and/or the biological tests specified in §§ 79.52(b) and 79.53 of these regulations. When applicable, they may also be required in conjunction with testing under §§ 79.54 and 79.58(c). Additional requirements concerning emission generation, delivery, dilution, quality control, and safety practices are outlined in § 79.61.

(a) *Vehicle and engine selection criteria.* (1) All vehicles and engines used to generate emissions for testing a fuel or additive/fuel mixture must be new (i.e., never before titled) and placed into the program with less than 500 miles on the odometer or 12 hours on the engine chronometer. The vehicles and engines shall be unaltered from the specifications of the original equipment manufacturer.

(2) The vehicle/engine type, vehicle/engine class, and vehicle/engine subclass designated to generate emissions for a given fuel or additive shall be the same type, class, and subclass which, over the previous three years, has consumed the most gallons of fuel in the fuel family applicable to the given fuel or additive. No distinction shall be made between light-duty vehicles and light-duty trucks for purposes of this classification.

(3) Within this vehicle/engine type, class, and subclass, the specific vehicles and engines acceptable for emission generation are those that represent the most common fuel metering system and the most common of the most important emission control system devices or characteristics with respect to emission reduction performance for the model year in which testing begins. These vehicles will be determined through a survey of the previous model year's vehicle/engine sales within the given subclass. These characteristics shall include, but need not be limited to, aftertreatment device(s), fuel aspiration, air injection, exhaust gas recirculation, and feedback type.

(4) Within the applicable subclass, the five highest selling vehicle/engine models that contain the most common such equipment and characteristics shall be determined. Any of these five models of the current model year (at the time testing begins) may be selected for emission generation.

(i) If one or more of the five models is not available for the current model year, the choice of model for emission generation shall be limited to those remaining among the five.

(ii) If fewer than five models of the given vehicle/engine type are available for the current model year, all such models shall be eligible.

(5) When the fuel or fuel additive undergoing testing is not commonly used or intended to be used in the vehicle/

engine types prescribed by this selection procedure, or when rebuilding or alteration is required to obtain a suitable vehicle/engine for emission generation, the manufacturer may submit a request to EPA for a modification in test procedure requirements. Any such request must include objective test results which support the claim that a more appropriate vehicle/engine type is needed as well as a suggested substitute vehicle/engine type. The vehicle/engine selection in this case shall be approved by EPA prior to the start of testing.

(6) Once a particular model has been chosen on which to test a fuel or additive product, all mileage accumulation and generation of emissions for characterization and biological testing of such product shall be conducted on that same model.

(i) If the initial test vehicle/engine fails or must be replaced for any reason, emission generation shall continue with a second vehicle/engine which is identical to, or resembles to the greatest extent possible, the initial test vehicle/engine. If more than one replacement vehicle/engine is necessary, all such vehicles/engines shall be identical, or resemble to the greatest extent possible, the initial test vehicle/engine.

(ii) Manufacturers are encouraged to obtain, at the start of a test program, more than one emission generation vehicle/engine of the identical model, to ensure the availability of back-up emission generator(s). All backup vehicles/engines must be conditioned and must have their emissions fully characterized, as done for the initial test vehicle/engine, prior to their use as emission generators for biological testing. Alternating between such vehicles/engines regularly during the course of testing is permissible and advisable, particularly to allow regular maintenance on such vehicles/engines during prolonged health effects testing.

(b) *Vehicle/engine operation and maintenance.* (1) For the purpose of generating combustion emissions from a fuel or additive/base fuel mixture for which the relevant class is light duty, either a light-duty vehicle shall be operated on a chassis dynamometer or a light-duty engine shall be operated on an engine dynamometer. When the relevant class is heavy duty, the emissions shall be generated on a heavy-duty engine operated on an engine dynamometer. In both cases, the vehicle or engine model shall be selected as described in paragraph (a) of this section and shall have all applicable fuel and emission control systems intact.

(2) Except as provided in § 79.51(h)(2)(iii), the fuel or additive/base fuel mixture being tested shall be used at all times during operation of the test vehicle or engine. No other fuels or additives shall be used in the test vehicle or engine once mileage accumulation has begun until emission generation for emission characterization and biological testing purposes is completed.

(i) A vehicle or engine may be used to generate emissions for the testing of more than one fuel or additive, provided that all such fuels and additives belong to the same fuel family pursuant to § 79.56(e)(i), and that, once a vehicle or engine has been used to generate emissions for an atypical fuel or additive (pursuant to § 79.56(e)(2)(iii)), it shall not be used in the testing of any other fuel or additive. Paragraphs (a) (2) and (3) of this section shall apply only to the first fuel or additive tested.

(ii) Prior to being used to generate emissions for testing an additional fuel or additive, a vehicle or engine which has previously been used for testing a different fuel or additive shall undergo an effective intermediate preconditioning cycle to remove the previously used fuel and its emissions from the vehicle's fuel and exhaust systems and from the combustion emission and evaporative emission control systems, if any.

(iii) Such preconditioning shall include, at a minimum, the following steps:

(A) The canister (if any) shall be removed from the vehicle and purged with 300 °F nitrogen at 20 liters per minute until the incremental weight loss of the canister is less than 1 gram in 30 minutes. This typically takes 3–4 hours and removes 100 to 120 grams of adsorbed gasoline vapors.

(B) The fuel tank shall be drained and filled to capacity with the new test fuel or additive/fuel mixture.

(C) The vehicle or engine shall be operated until at least 95% of the fuel tank capacity is consumed.

(D) The purged canister shall be returned to the vehicle.

(E) The fuel tank shall be drained and filled to 40% capacity with test fuel.

(F) Two-hour fuel tank heat builds from 72–120 °F shall be performed repeatedly as necessary to achieve canister breakthrough. The fuel tank must be drained and filled prior to each heat build.

(3) Scheduled and unscheduled vehicle/engine maintenance.

(i) During emission generation, vehicles and engines must be maintained in good condition by following the recommendations of the original equipment manufacturer (OEM) for scheduled service and parts replacement, with repairs performed only as necessary. Modifications, adjustments, and maintenance procedures contrary to procedures found in 40 CFR part 86 for the maintenance of test vehicles/engines or performed solely for the purpose of emissions improvement are not allowed.

(ii) If unscheduled maintenance becomes necessary, the vehicle or engine must be repaired to OEM specifications, using OEM or OEM-approved parts. In addition, the tester is required to measure the basic emissions pursuant to § 79.52(b)(2)(i) after the unscheduled maintenance and before resuming testing to ensure that the post-maintenance emissions shall be within 20 percent of pre-maintenance emissions levels. If the basic emissions cannot be brought within 20 percent of their previous levels, then the manufacturer shall restart the emissions characterization and health testing of its products combustion emissions using a new vehicle/engine.

(c) *Mileage accumulation.* (1) A vehicle/engine break-in period is required prior to generating emissions for characterization and/or biological testing under this subpart. The required mileage accumulation may be accomplished on a test track, on the street, on a dynamometer, or using any other conventionally accepted method.

(2) Vehicles to be used in the evaluation of baseline and non-baseline fuels and fuel additives shall accumulate 4,000 miles prior to emission testing. Engines to be used in the evaluation of baseline and non-baseline fuels and fuel additives shall accumulate 125 hours of operation on an engine dynamometer prior to emission testing.

(3) When the test formulation is classified as an atypical fuel or fuel additive formulation (pursuant to definitions in § 79.56(e)(4)(iii)), the following additional mileage accumulation requirements apply:

(i) The test vehicle/engine must be operated for a minimum of 4,000 vehicle miles or 125 hours of engine operation.

(ii) Thereafter, at intervals determined by the tester, all emission fractions (*i.e.*, vapor, semi-volatile, and particulate) shall be sampled and analyzed for the presence and amount of the atypical element(s) and/or other atypical constituents. Pursuant to paragraph (d) of this section, the sampled emissions must be generated in the absence of an intact aftertreatment device. Immediately before the samples are taken, a brief warmup period (at least ten miles or the engine equivalent) is required.

(iii) Mileage accumulation shall continue until either 50 percent or more of the mass of each atypical element (or other atypical constituent) entering the engine can be measured in the exhaust emissions (all fractions combined), or the vehicle/engine has accumulated mileage (or hours) equivalent to 40 percent of the average useful life of the applicable vehicle/engine class (pursuant to regulations in 40 CFR part 86). For example, the maximum mileage required for light-duty vehicles is 40 percent of 100,000 miles (*i.e.*, 40,000 miles), while the maximum time of operation for heavy-duty engines is the equivalent of 40 percent of 290,000 miles (*i.e.*, the equivalent in engine hours of 116,000 miles).

(iv) When either condition in paragraph (c)(3)(iii) of this section has been reached, additional emission characterization and biological testing of the emissions may begin.

(d) *Use of exhaust aftertreatment devices.* (1) If the selected test vehicle/engine, as certified by EPA, does not come equipped with an emissions

aftertreatment device (such as a catalyst or particulate trap), such device shall not be used in the context of this program.

(2) Except as provided in paragraph (d)(3) of this section for certain specialized additives, the following provisions apply when the test vehicle/engine, as certified by EPA, comes equipped with an emissions aftertreatment device.

(i) For mileage accumulation:

(A) When the test formulation does not contain any atypical elements (pursuant to definitions in § 79.56(e)(4)(iii)), an intact aftertreatment device must be used during mileage accumulation.

(B) When the test formulation does contain atypical elements, then the manufacturer may choose to accumulate the required mileage using a vehicle/engine equipped with either an intact aftertreatment device or with a non-functional aftertreatment device (e.g., a blank catalyst without its catalytic wash coat). In either case, sampling and analysis of emissions for measurement of the mass of the atypical element(s) (as described in § 79.57(c)(3)) must be done on emissions generated with a non-functional (blank) aftertreatment device.

(*1*) If the manufacturer chooses to accumulate mileage without a functional aftertreatment device, and if the manufacturer wishes to do this outside of a laboratory/test track setting, then a memorandum of exemption for product testing must be obtained by applying to the Director of the Field Operations and Support Division (see § 79.59(a)(1)).

(*2*) [Reserved]

(ii) For Tier 1 (§ 79.52), the total set of requirements for the characterization of combustion emissions (§ 79.52(b)) must be completed two times, once using emissions generated with the aftertreatment device intact and a second time with the aftertreatment device rendered nonfunctional or replaced with a non-functional aftertreatment device as described in paragraph (d)(2)(i)(B) of this section.

(iii) For Tier 2 (§ 79.53), the standard requirements for biological testing of combustion emissions shall be conducted using emissions generated with a non-functioning aftertreatment device as described in paragraph (d)(2)(i)(B) of this section.

(iv) For alternative Tier 2 requirements (§ 79.58(c)) or Tier 3 requirements (§ 79.54) which may be prescribed by EPA, the use of functional or nonfunctional aftertreatment devices shall be specified by EPA as part of the test guidelines.

(v) In the case where an intact aftertreatment device is not in place, all other manufacturer-specified combustion characteristics (e.g., back pressure, residence time, and mixing characteristics) of the altered vehicle/engine shall be retained to the greatest extent possible.

(3) Notwithstanding paragraphs (d)(1) and (d)(2) of this section, when the subject of testing is a fuel additive specifically intended to enhance the effectiveness of exhaust aftertreatment devices, the related aftertreatment device may be used on the emission generation vehicle/engine during all mileage accumulation and testing.

(e) *Generation of combustion emissions*—(1) *Generating combustion emissions for emission characterization*. (i) Combustion emissions shall be generated according to the exhaust emission portion of the Federal Test Procedure (FTP) for the certification of new motor vehicles, found in 40 CFR part 86, subpart B for light-duty vehicles/engines, and subparts D, M and N for heavy-duty vehicles/engines. The Urban Dynamometer Driving Schedule (UDDS), pursuant to 40 CFR part 86, appendix I(a), shall apply to light-duty vehicles/engines and the Engine Dynamometer Driving Schedule (EDS), pursuant to 40 CFR part 86, appendix I(f)(2), shall apply to heavy-duty vehicles/engines. The motoring portion of the heavy-duty test cycle may be eliminated, at the manufacturer's option, for the generation of emissions.

(A) For light-duty engines operated on an engine dynamometer, the tester shall determine the speed-torque equivalencies (''trace'') for its test engine from valid FTP testing performed on a chassis dynamometer, using a test vehicle with an engine identical to that being tested. The test engine must then be operated under these speed and torque specifications to simulate the FTP cycle.

(B) Special procedures not included in the FTP may be necessary in order to characterize emissions from fuels and fuel additives containing atypical elements or to collect some types of emissions (e.g., particulate emissions from light-duty vehicles/engines, semi-volatile emissions from both light-duty and heavy-duty vehicles/engines). Such alterations to the FTP are acceptable.

(C) For Tier 2 testing, the engines shall operate on repeated bags 2 and 3 of the UDDS or back to back repeats of the heavy-duty transient cycle of the EDS.

(ii) Pursuant to § 79.52(b)(1)(i) and § 79.57(d)(2)(ii), emission generation and characterization must be repeated three times when the selected vehicle/engine is normally operated without an emissions aftertreatment device and six times when the selected vehicle/engine is normally operated with an emissions aftertreatment device. In the latter case, the emission generation and characterization process shall be repeated three times with the intact aftertreatment device in place and three times with a non-functioning (blank) aftertreatment device in place.

(iii) From both light-duty and heavy-duty vehicles/engines, samples of vapor phase, semi-volatile phase, and particulate phase emissions shall be collected, except that semi-volatile phase, and particulate emissions need not be sampled for fuels and additives in the methane and propane families (pursuant to § 79.56(e)(1)(v) and (vi)). The number and type of samples to be collected and separately analyzed during one emission generation/characterization process are as follows:

(A) In the case of combustion emissions generated from light-duty vehicles/engines, the samples consist of three bags of vapor emissions (one from each segment of the light-duty exhaust emission cycle) plus one sample of particulate-phase emissions and one sample of semi-volatile-phase emissions (collected over all segments of the exhaust emission cycle). If the mass of particulate emissions or semi-volatile emissions obtained during one driving cycle is not sufficient for characterization, up to three driving cycles may be performed and the extracted fractions combined prior to chemical analysis. Particulate-phase emissions shall not be combined with semi-volatile-phase emissions. The test laboratory should focus on the characterization of the limit of detection for particulates and semi-volatile emissions.

(B) In the case of combustion emissions generated from heavy-duty engines, the samples consist of one sample of each emission phase (vapor, particulate, and semi-volatile) collected over the entire cold-start cycle and a second sample of each such phase collected over the entire hot-start cycle (see 40 CFR 86.334 through 86.342).

(iv) *Emission collection and storage.* (A) Vapor phase emissions shall be collected and stored in Tedlar bags for subsequent chemical analysis. Storage conditions are specified in § 79.52(b)(2).

(B) Particulate phase emissions shall be collected on a particulate filter (or more than one, if required) using methods described in 40 CFR 86.1301 through 86.1344. These methods, ordinarily applied only to heavy-duty emissions, are to be adapted and used for collection of particulates from light-duty vehicles/engines, as well. The particulate matter may be stored on the filter in a sealed container, or the soluble organic fraction may be extracted and stored in a separate sealed container. Both the particulate and the extract shall be shielded from ultraviolet light and stored at −20 °C or less. Particulate emissions shall be tested no later than six months from the date they were generated.

(C) Semi-volatile emissions shall be collected immediately downstream from the particulate collection filters using porous polymer resin beds, or their equivalent, designed for their capture. The soluble organic fraction of semi-volatile emissions shall be extracted immediately and tested within six months of being generated. The extract shall be stored in a sealed container which is shielded from ultraviolet light and stored at −20 °C or less.

(D) Particulate and semi-volatile phase emission collection, handling and extraction methods shall not alter the composition of the collected material, to the extent possible.

(v) Additional requirements for combustion emission sampling, storage,

and characterization are specified in § 79.52(b).

(2) *Generating whole combustion emissions for biological testing.* (i) Biological tests requiring whole combustion emissions shall be conducted using emissions generated from the test vehicle or engine operated in accordance with general FTP requirements.

(ii) Light-duty test vehicles/engines shall be repeatedly operated over the Urban Dynamometer Driving Schedule (UDDS) (or equivalent engine dynamometer trace, per paragraph (e)(1)(i)(A) of this section) and heavy-duty test engines shall be repeatedly operated over the Engine Dynamometer Schedule (EDS) (see 40 CFR part 86, appendix I).

(A) The tolerances of the driving cycle shall be two times those of the Federal Test Procedure and must be met 95 percent of the time.

(B) The UDDS or EDS shall be repeated as many times as required for the biological test session.

(C) Light-duty dynamometers shall be calibrated prior to the start of a biological test (40 CFR 86.118–78), verified weekly (40 CFR 86.118–78), and recalibrated as required. Heavy-duty dynamometers shall be calibrated and checked prior to the start of a biological test (40 CFR 86.1318–84), recalibrated every two weeks (40 CFR 86.1318–84(a)) and checked as stated in 40 CFR 86.1318–84(b) and (c).

(D) The fuel reservoir for the test vehicle/engine shall be large enough to operate the test vehicle/engine throughout the daily biological exposure period, avoiding the need for refueling during testing.

(iii) An apparatus to integrate the large concentration swings typical of transient-cycle exhaust is to be used between the source of emissions and the exposure chamber containing the animal test cages(s). The purpose of such apparatus is to decrease the variability of the biological exposure atmosphere and achieve the necessary concentration of CO or NO_X, whichever is limiting.

(A) A large mixing chamber is suggested for this purpose. The mixing chamber would be charged from the CVS at a constant rate determined by the exposure chamber purge rate. Flow to the exposure chamber would begin at the conclusion of the initial transient cycle with the associated mixing chamber charge.

(B) A potential alternative apparatus is a mini-diluter (see, for example, AIGER/CRADA, February, 1994 in § 79.57(g)).

(C) The mixing chamber (or any alternative emission moderation apparatus) must function such that the average concentration of total hydrocarbons leaving the apparatus shall be within 10 percent of the average concentration of hydrocarbons entering the chamber, taking into account any further intentional dilution occurring in the apparatus pursuant to paragraph (e)(2)(iv)(C) of this section.

(iv) *Emission dilution.* (A) Dilution air can be pre-dried to lower the relative humidity, thus permitting a lower dilution rate and a higher concentration of hydrocarbons to be achieved without condensation of water vapor.

(B) These procedures include requirements that the mean exposure concentration in the inhalation test chamber shall be within 10 percent of the target concentration for the single species being controlled (establish in the development phase of testing) on 90 percent or more of exposure days and that daily monitoring of CO, CO_2, NO_X, SO_X, and total hydrocarbons in the exposure chamber shall be required. Analysis of the particle size distribution shall also be performed to established the stability and consistency of particle size distribution in the test exposure.

(C) After the initial exhaust dilution to preserve the character of the exhaust, the exhaust stream can be further diluted in the mixing chamber (and/or after leaving the chamber) to achieve the desired biological exposure concentrations.

(v) *Verification procedures.* (A) The entire system used to dilute and transport whole combustion emissions (*i.e.*, from exhaust pipe to outlet in the biological testing chamber) shall be verified before any animal exposures begin, and verified at least weekly during testing. (See procedures at 40 CFR 86.119–90 for light-duty vehicles and § 86.1319–90 for heavy-duty engines.)

Verification testing shall be accomplished by introducing a known sample at the end of the vehicle/engine exhaust pipe into the dilution system and measuring the amount exiting the system. For example, an injected hydrocarbon sample could be detected with a gas chromatograph (GC) and flame ionization detector (FID) to determine the recovery factor.

(B) Verification of the integrity of the mixing chamber (or alternative apparatus) shall be determined before animal exposures begin and at least weekly thereafter. Composite values for weight percent total hydrocarbons shall be determined for the test vehicle/engine's dilute exhaust stream entering and exiting the mixing chamber apparatus. These values must be within 10 percent of each other.

(vi) *Emission exposure quality control.* (A) The tester shall incorporate the additional quality assurance and safety procedures outlined in § 79.61(d) to control variability of emissions during the generation of exposure emissions during health effect testing.

(B) These procedures include requirements that the mean exposure concentration in the inhalation test chamber shall be within 10 percent of the target concentration (established in the developmental phase of testing) on 90 percent or more of exposure days and that daily monitoring of CO, CO_2, NO_X, SO_X, and total hydrocarbons in the exposure chamber shall be required. Analysis of the particle size distribution shall also be performed to establish the stability and consistency of particle size distribution in the test exposure.

(C) The testing facility shall allow an audit of its premises, the qualifications, e.g., curriculum vitae, of its staff assigned to testing, and the specimens and records of the testing for registration purposes (as specified in § 79.60).

(vii) To allow for customary laboratory scheduling and unforeseen problems affecting the combustion emission generation or dilution equipment, biological exposures may be interrupted on limited occasions, as specified in § 79.61(d)(5). Interruptions exceeding these limitations shall cause the affected test(s) to be void. Testers shall be aware of concerns for backup vehicles/engines cited in paragraph (a)(7)(ii) of this section.

(3) *Generating particulate and semi-volatile emissions for biological testing.* (i) Salmonella mutagenicity testing, pursuant to § 79.68, shall be conducted on extracts of the particulate and semi-volatile emission phases separately. These emissions shall be generated by operating the test vehicle/engine over the appropriate FTP driving schedule (see paragraph (e)(2)(ii) of this section) and collected and analyzed according to methods described in 40 CFR 86.1301 through 1344 (further information on this subject may be found in Perez, *et al.* CRC Report No. 551, 1987 listed in § 79.57(g)).

(A) Particulate emissions shall be collected on particulate filters and extracted from the collection equipment for use in biological tests. The number of repetitions of the applicable driving schedule required to collect sufficient quantities of the particulate emissions will vary, depending on the characteristics of the engine, the test fuel, and the requirements of the biological test protocol. The particulate sample may be collected on one or more filters, as necessary.

(B) Semi-volatile emissions shall be collected immediately downstream from the particulate collection filters using porous polymer resin beds, or their equivalent, designed for their capture. Semi-volatile phase emissions shall be collected on one apparatus. The time spent collecting sufficient quantities of the test substances in emissions samples will vary, depending on the emission characteristics of the engine and fuel or additive/base fuel mixture and on the requirements of the biological test protocol.

(ii) The extraction method shall be determined by the specifications of the biological test for which the emissions are used.

(iii) Particulate and semi-volatile emission storage requirements are as specified in § 79.57(e)(1)(iv).

(iv) Particulate and semi-volatile phase emission collection, handling and extraction methods shall not alter the composition of the collected material, to the extent possible.

(v) Particulate emissions shall not be combined with semi-volatile phase emissions.

(f) *Generation of evaporative emissions for characterization and biological testing.* (1) Except as provided in paragraph (f)(5) of this section, an evaporative emissions generator shall be used to volatilize samples of a fuel or additive/base fuel mixture for evaporative emissions characterization and biological testing. Emissions shall be collected and sampled using equipment and methods appropriate for use with the compounds being characterized and the requirements of the emission characterization analysis. In the case of potentially explosive test substance concentrations, care must be taken to avoid generating explosive atmospheres. The tester is referred to § 79.61(d)(8) for considerations involving explosivity.

(2) *Evaporative Emissions Generator (EEG) Description.* An EEG is a fuel tank or vessel to which heat is applied causing a portion of the fuel to evaporate at a desired rate. The manufacturer has flexibility in designing an EEG for testing a particular fuel or fuel additive. The sample used to generate emissions in the EEG shall be renewed at least daily.

(i) The evaporation chamber shall be made from materials compatible with the fuels and additives being tested and shall be equipped with a drain.

(ii) The chamber shall be filled to 40 ±5 percent of its interior volume with the fuel or additive/base fuel mixture being tested, with the remainder of the volume containing air.

(iii) The concentration of the evaporated fuel or additive/base fuel mixture in the vapor space of the evaporation chamber during the time emissions are being withdrawn for testing shall not vary by more than 10 percent from the equilibrium concentration in the vapor space of emissions generated from the fresh fuel or additive/base fuel mixture in the chamber.

(A) During the course of a day's emission generation period, the level of fuel in the EEG shall be maintained to within 7 percent of its height at the start of the daily exposure period.

(B) The fuel used in the EEG shall be drained at the end of each daily exposure. The EEG shall be refilled with a fresh supply of the test formulation before the start of each daily exposure.

(C) The vapor space of the evaporation chamber shall be well mixed throughout the time emissions are being withdrawn for testing.

(iv) The size of the evaporation chamber shall be determined by the rate at which evaporative emissions shall be needed in the test animal exposure chambers and the rate at which the fuel or the additive/base fuel mixture evaporates. The rate of evaporative emissions may be adjusted by altering the size of the EEG or by using one or more additional EEG(s). Emission rate modifications shall not be adjusted by temperature control or pressure control.

(v) The temperature of the fuel or additive/base fuel mixture in the evaporation chamber shall be 130 °F±5°F. The vapors shall maintain this temperature up to the point in the system where the vapors are diluted.

(vi) The pressure in the vapor space of the evaporation chamber and the dilution and sampling apparatus shall stay within 10 percent of ambient atmospheric pressure.

(vii) There shall be no controls or equipment on the evaporation chamber system that change the concentration or composition of the vapors generated for testing.

(viii) Manufacturers shall perform verification testing of evaporative emissions in a manner analogous to the verification testing performed for combustion emissions.

(3) For biological testing, vapor shall be withdrawn from the EEG at a constant rate, diluted with air as required for the particular study, and conducted immediately to the biological testing chamber(s) in a manner similar to the method used in § 79.57(e), excluding the mixing chamber therein. The rate of emission generation shall be high enough to supply the biological exposure chamber with sufficient emissions to allow for a minimum of fifteen air changes per exposure chamber per hour. To allow for customary laboratory scheduling and for unforeseen problems with the evaporative emission generation or dilution equipment,

biological exposures may be interrupted on limited occasions, as specified in § 79.61(d)(5). Interruptions exceeding these limitations shall cause the affected test(s) to be void.

(4) For characterization of evaporative emissions, samples of equilibrated emissions to the vapor space of the EEG shall be withdrawn into Tedlar bags, then stored and analyzed as specified in § 79.52(b).

(5) A manufacturer (or group of manufacturers) may submit to EPA a request for approval of an alternative method of generating evaporative emissions for use in emission characterization and biological tests required under this subpart.

(i) To be approved by EPA, the request must fully explain the rationale for the proposed method as well as the technical procedures, quality control, and safety precautions to be used, and must demonstrate that the proposed method will meet the following criteria:

(A) The emission mixture generated by the proposed procedures must be reasonably similar to the equilibrium composition of the vapor which occurs in the vehicle fuel tank head space when the subject fuel or additive/base fuel mixture is in use and near-maximum in-use temperatures are encountered.

(B) The emissions mixture generated by the proposed method must be sufficiently concentrated to provide adequate exposure levels in the context of the required toxicologic tests.

(C) The proposed method must include procedures to ensure that the emissions delivered to the biologic exposure chambers will provide a reasonably constant exposure atmosphere over time.

(ii) If EPA approves the request, EPA will place in the public record a copy of the request, together with all supporting procedural descriptions and justifications, and will notify the public of its availability by publishing a notice in the FEDERAL REGISTER.

(g) *References.* For additional background information on the emission generation procedures outlined in this paragraph (g), the following references may be consulted. Additional references can be found in § 79.61(f).

(1) AIGER/CRADA (American Industry/Government Emissions Research Cooperative Research and Development Agreement, ''Specifications for Advanced Emissions Test Instrumentation'' AIGER PD–94–1, Revision 5.0, February, 1994

(2) Black, F. and R. Snow, ''Constant Volume Sampling System Water Condensation'' SAE #940970 in ''Testing and Instrumentation'' SP–1039, Society of Automotive Engineers, Feb. 28–Mar. 3, 1994.

(3) Perez, J.M., Jass, R.E., Leddy, D.G., eds. ''Chemical Methods for the Measurement of Unregulated Diesel Emissions (CRC–APRAC Project No. CAPI–1–64), Coordinating Research Council, CRC Report No. 551, August, 1987.

(4) Phalen, R.F., ''Inhalation Studies: Foundations and Techniques'', CRC Press, Inc., Boca Raton, Florida, 1984.

[59 FR 33093, June 27, 1994, as amended at 61 FR 36511, July 11, 1996]

§ 79.58 Special provisions.

(a) *Relabeled Additives.* Sellers of relabeled additives (pursuant to § 79.50) are not required to comply with the provisions of § 79.52, 79.53 or 79.59, except that such sellers are required to comply with § 79.59(b).

(b) *Low Vapor Pressure Fuels and Additives.* Fuels which are not designated as ''evaporative fuels'' and fuel additives which are not designated as ''evaporative fuel additives'' pursuant to the definitions in § 79.50 need not undergo the emission characterization or health effects testing specified in §§ 79.52 and 79.53 for evaporative emissions. At EPA's discretion, the evaporative emissions of such fuels and additives may be required to undergo Tier 3 testing, pursuant to § 79.54.

(c) *Alternative Tier 2 Provisions.* At EPA's discretion, EPA may modify the standard Tier 2 health effects testing requirements for a fuel or fuel additive (or group). Such modification may encompass substitution, addition, or deletion of Tier 2 studies or study specifications, and/or changes in underlying engine or equipment requirements, except that a Tier 2 endpoint will not be deleted in the absence of existing information deemed adequate by EPA or alternative testing requirements for such

endpoint. If warranted by the particular requirements, EPA will allow additional time for completion of the alternative Tier 2 testing program.

(1) When EPA intends to require testing in lieu of or in addition to standard Tier 2 health testing, EPA will notify the responsible manufacturer (or group) by certified letter of the specific tests which EPA is proposing to require in lieu of or in addition to Tier 2, and the proposed schedule for completion and submission of such tests. A copy of the letter will be placed in the public record. EPA intends to send the notification prior to November 27, 1995, or in the case of new fuels and additives (as defined in § 79.51(c)(3)), within 18 months of EPA's receipt of an intent to register such product. However, EPA's notification to the manufacturer (or group) may occur at any time up to EPA's receipt of Tier 2 data for the product(s) in question. EPA will provide the manufacturer with 60 days from the date of receipt of the notice to comment on the tests which EPA is proposing to require and on the proposed schedule. If the manufacturer believes that undue costs or hardships will occur as a result of EPA's delay in providing notification of alternative Tier 2 requirements, then the manufacturer's comments should describe and include evidence of such hardship. In particular, if the standard Tier 2 toxicology testing for the fuel or additive in question has already begun at the time the manufacturer receives EPA's notification of proposed alternative Tier 2 requirements, then EPA shall refrain from requiring alternative Tier 2 tests provided that EPA receives the standard Tier 2 data and report (pursuant to § 79.59(c)) within one year of the date on which the toxicology testing began.

(2) EPA will issue a notice in the FEDERAL REGISTER announcing its intent to require special testing in lieu of or in addition to the standard Tier 2 testing for a particular fuel or additive manufacturer or group, and that a copy of the letter to the manufacturer or group describing the proposed alternative Tier 2 testing for that manufacturer or group is available in the public record for review and comment. The public shall have a minimum of 30 days after the publication of this notice to comment on the proposed alternative Tier 2 testing.

(3) EPA will include in the public record a copy of any timely comments concerning the proposed alternative Tier 2 testing requirements received from the affected manufacturer or group or from the public, and the responses of EPA to such comments. After reviewing all such comments received, EPA may adopt final alternative Tier 2 requirements by sending a certified letter describing such final requirements to the manufacturer or group. In that event, EPA will also issue a notice in the FEDERAL REGISTER announcing that it has adopted final alternative Tier 2 requirements and that a copy of the letter adopting the requirements has been included in the public record.

(4) After EPA's receipt of a manufacturer's (or group's) submittals, EPA will notify the responsible manufacturer (or group) regarding the adequacy of the submittal and potential Tier 3 testing requirements according to the same relative time intervals and by the same procedures as specified in § 79.51 (c) and (d) for routine Tier 1 and Tier 2 submittals.

(d) *Small Business Provisions.* (1) For purposes of these provisions, when subsidiary, divisional, or other complex business arrangements exist, *manufacturer* is defined as the business entity with ultimate ownership of all related parents, subsidiaries, divisions, branches, or other operating units. *Total annual sales* means the average of the manufacturer's total sales revenue, excluding any revenue which represents the collection of federal, state, or local excise taxes or sales taxes, in each of the three years prior to such manufacturer's submittal to EPA of the basic registration information pursuant to § 79.59(b)(2) through (b)(5).

(2) *Provisions Applicable to Baseline and Non-baseline Products.* A manufacturer with total annual sales less than $50 million is not required to meet the requirements of Tier 1 and Tier 2 (specified in §§ 79.52 and 79.53) with regard to such manufacturer's fuel and/or additive products which meet the criteria for inclusion in a Baseline or Non-baseline group pursuant to § 79.56. Upon

such manufacturer's satisfactory completion and submittal to EPA of basic registration data specified in § 79.59(b), the manufacturer may request and EPA shall issue a registration for such product, subject to § 79.51(c) and paragraphs (d)(4) and (d)(5) of this section.

(3) *Provisions Applicable to Atypical Products.* A manufacturer with total annual sales less than $10 million is not required to meet the requirements of Tier 2 (specified in § 79.53) in regard to such manufacturer's fuel and/or additive products which meet the criteria for inclusion in an Atypical group pursuant to § 79.56. Upon such manufacturer's satisfactory completion and submittal to EPA of basic registration data specified in § 79.59(b) and Tier 1 information specified in § 79.52 for an Atypical fuel or additive, the manufacturer may request and EPA shall issue a registration for such product, subject to § 79.51(c) and paragraphs (d)(4) and (d)(5) of this section. Compliance with Tier 1 requirements under this paragraph may be accomplished by the individual manufacturer or as a part of a group pursuant to § 79.56.

(4) Any registration granted by EPA under the provisions of this section are conditional upon satisfactory completion of any Tier 3 requirements which EPA may subsequently impose pursuant to § 79.54. In such circumstances, the Tier 3 requirements might include (but would not necessarily be limited to) information which would otherwise have been required under the provisions of Tier 1 and/or Tier 2.

(5) The provisions in paragraphs (d)(2) and (d)(3) of this section are voluntary on the part of qualifying small manufacturers. Such manufacturers may choose to fulfill the standard requirements for their fuels and additives, individually or as a part of a group, rather than satisfying only the requirements specified in paragraphs (d)(2) and/or (d)(3) of this section. If a qualifying small manufacturer elects these special provisions rather than the standard requirements for a product, then EPA will generally assume that any additional information submitted by other manufacturers, for fuels and additives meeting the same grouping criteria (under § 79.56) as that of the small manufacturer's product, is pertinent to further testing and/or regulatory decisions that may affect the small manufacturer's product.

(6) In the case of an additive for which the manufacturer is not required to meet the requirements of Tier 2 pursuant to paragraph (d)(3) of this section:

(i) A fuel manufacturer which blends such an additive into fuel shall not be required to meet the requirements of Tier 2 with respect to such additive/fuel mixture.

(ii) An additive manufacturer which blends such an additive with one or more other registered additive products and/or with substances containing only carbon and/or hydrogen shall not be required to meet the requirements of Tier 2 with respect to such additive or additive blend.

(e) *Aftermarket Aerosol Additives.* (1) To obtain registration for an aftermarket aerosol fuel additive, the manufacturer shall provide existing information in the form of a literature search, a discussion of the potential exposure(s) to such product, and the basic registration data specified in § 79.59(b).

(2) The literature search shall include existing data on potential health and welfare effects due to exposure to the aerosol product itself and its raw (uncombusted) components. The analysis for potential exposures shall be based on the actual or anticipated production volume and market distribution of the particular aerosol product, and its estimated frequency of use. Other Tier 1 and Tier 2 requirements are not routinely required for aerosol products. EPA will review the submitted information and, at EPA's discretion, may require from the manufacturer further information and/or testing under Tier 3 on a case-by-case basis.

[59 FR 33093, June 27, 1994, as amended at 62 FR 12571, Mar. 17, 1997]

§ 79.59 Reporting requirements.

(a) *Timing.* (1) The manufacturer of each designated fuel or fuel additive shall submit to EPA the basic registration data detailed in paragraph (b) of this section. Forms for submitting this data may be obtained from EPA at the following address: Director, Field Operations and Support Division, 6406J—

Fuel/Additives Registration, U.S. Environmental Protection Agency, 401 M Street, S.W., Washington, DC 20460.

(i) For existing products (pursuant to § 79.51(c)(1)), manufacturers shall submit the basic registration data as specified in § 79.59(b) to EPA by November 28, 1994.

(ii) For registrable products (pursuant to § 79.51(c)(2)), manufacturers shall submit the basic registration data as specified in § 79.59(b) to apply for registration for such product.

(iii) For new products (pursuant to § 79.51(c)(3)), manufacturers are strongly encouraged to notify EPA of an intent to obtain product registration by submitting the basic registration data as specified in § 79.59(b) prior to starting Tiers 1 and 2.

(2) The information specified in paragraph (c) of this section shall be submitted to the address in paragraph (a)(1) of this section at the conclusion of activities performed in compliance with Tiers 1 and 2 under the provisions of §§ 79.52 and 79.53, according to the time constraints specified in § 79.51 (c) through (d).

(3) The information specified in paragraph (d) of this section shall be submitted to EPA at the address in paragraph (a)(1) of this section at the conclusion of activities performed in compliance with Tier 3 under the provisions of § 79.54.

(b) *Basic Registration Data.* Each manufacturer of a designated fuel or fuel additive shall submit the following data in regard to such fuel or fuel additive:

(1) The information specified in § 79.11 or § 79.21. If such information has already been submitted to EPA in compliance with subpart B or C of this part, and if such previous information is accurate and up-to-date, the manufacturer need not resubmit this information.

(2) Annual production volume of the fuel or fuel additive product, in units of gallons per year if most commonly sold in liquid form or kilograms per year if most commonly sold in solid form. For fuels and fuel additives already in production, the most recent annual production volume and the volume projected to be produced in the third subsequent year shall be provided. For products not yet in production, the best estimate of expected annual volume during the third year of production shall be provided.

(3) *Market distribution of the product.* For fuels and bulk additives, this information shall be presented as the percent of total annual sales volume marketed in each Petroleum Administration for Defense District (PADD). The states comprising each PADD are listed in the following section. For aftermarket additives, the distribution data shall be presented as the percent of total annual sales volume marketed in each state. For a product not yet in production, the manufacturer shall present the distribution (by PADD or state, as applicable) projected to occur during the third year of production.

(i) The following states and jurisdictions are included in PADD I:

Connecticut
Delaware
District of Columbia
Florida
Georgia
Maine
Maryland
Massachusetts
New Hampshire
New Jersey
New York
North Carolina
Pennsylvania
Rhode Island
South Carolina
Vermont
Virginia
West Virginia

(ii) The following states are included in PADD II:

Illinois
Indiana
Iowa
Kansas
Kentucky
Michigan
Minnesota
Missouri
Nebraska
North Dakota
Ohio
Oklahoma
South Dakota
Tennessee
Wisconsin

(iii) The following states are included in PADD III:

Alabama
Arkansas

Louisiana
Mississippi
New Mexico
Texas

(iv) The following states are included in PADD IV:

Colorado
Idaho
Montana
Utah
Wyoming

(v) The following states are included in PADD V:

Alaska
Arizona
California
Hawaii
Nevada
Oregon
Washington

(4) Any applicable information pursuant to the grouping provisions in § 79.56, as follows:

(i) If the manufacturer has enrolled or intends to enroll the product in a fuel/additive group, the relevant group and the person(s) or entity expected to submit information on behalf of the group must be identified.

(ii) If the manufacturer intends to rely on registration information previously submitted by another manufacturer (or group) for registration of other product(s) in the same fuel/additive group, then the original submitter and its product (or product group) shall be identified. In such cases, the manufacturer shall provide evidence that the original submitter has been notified of the use of its registration data and that the manufacturer has complied or intends to comply with the proportional reimbursement required under § 79.56(c) of this rule.

(5) Any applicable information pursuant to the special provisions in § 79.58, as follows:

(i) If the manufacturer claims applicability of the special provisions for relabeled additives, pursuant to § 79.58(a), then the manufacturer and brand name of the original product shall be given.

(ii) If the manufacturer claims applicability of any small business provisions pursuant to § 79.58(d), the average of the manufacturer's total annual sales revenue for the previous three years shall be given.

(iii) If the manufacturer claims applicability of the special provisions for aerosol products, pursuant to § 79.58(e), then the purpose and recommended frequency of use shall be given.

(c) Tier 1 and Tier 2 Reports. If the results of Tiers 1 and 2 are reported to EPA at the same time, then the report shall include the following documents in paragraphs (c)(1) through (7) of this section. If Tier 1 and Tier 2 results are submitted to EPA separately, then the separate Tier 1 report shall include only documents in paragraphs (c)(1) through (4), (c)(6), and associated appendices in paragraphs (c)(7) of this section, and the separate Tier 2 report shall include only documents in paragraphs (c)(1) through (3), (c)(5), (c)(6), and associated appendices in paragrpah (c)(7) of this section. In addition, manufacturers complying with Tier 2 requirements according to one of the time schedules specified in § 79.51(c)(1)(ii)(B), § 79.51(c)(1)(vi)(B)(*2*), or § 79.51(c)(1)(vii)(B)(*2*) must submit evidence of a suitable arrangement for completion of Tier 2 (e.g., a copy of a signed contract with a qualified laboratory for applicable Tier 2 services) by the date specified in the applicable time schedule.

(1) *Cover page.* (i) Identification of test substance,

(ii) Name and address of the manufacturer of the test substance,

(iii) Name and phone number of a designated contact person,

(iv) Group information, if applicable, including:

(A) Group name or grouping criteria,

(B) Name and address of responsible organization or entity reporting for the group,

(C) Product trade name and manufacturer of each member fuel and additive to which the report pertains.

(2) *Executive Summary.* Text overview of the significant results and conclusions obtained as a result of completing the requirements of Tier 1 and/or Tier 2, including references if used to support such results and conclusions.

(3) *Test Substance Information.* Test substance description, including, as applicable,

(i) Base fuel parameter values (including types and concentrations of

base fuel additives) or test fuel composition (if a fuel other than the base fuel is used in testing). These values must be provided for each of the fuel parameters specified in § 79.55 for the applicable fuel family.

(ii) Test additive composition and concentration

(4) *Summary of Tier 1.* (i) *Literature Search.* Pursuant to § 79.52(d), the literature search shall include a text summary of the methods and results of the literature search, including the following:

(A) Identification of person(s) performing the literature search,

(B) Description of data sources accessed, search strategy used, search period, and terms included in literature search,

(C) Documentation of all unpublished in-house and other privately-conducted studies,

(D) Tables summarizing the protocols and results of all cited studies,

(E) Summary of significant results and conclusions with respect to the effects of the emissions of the subject fuel or fuel additive on the public health and welfare, including references if used to support such results and conclusions.

(F) Statement of the extent to which the literature search has produced adequate information comparable to that which would otherwise be obtained through the performance of applicable emission characterization requirements under § 79.52(b) and/or health effects testing requirements under § 79.53, including justifications and specific references.

(ii) *Emission Characterization.* Pursuant to § 79.52(b), the emission characterization shall include:

(A) Name, address, and telephone number of the laboratory performing the characterization,

(B) Name and description of analytic methods used for characterization.

(5) *Summary of Tier 2.* For each health effects test performed pursuant to the provisions of § 79.53, the Tier 2 summary shall contain the following information:

(i) Name, address, and telephone number of the testing facility,

(ii) Summary of procedures (including quality assurance, quality control and compliance with Good Laboratory Practice Standards as specified in § 79.60), findings, and conclusions, including references if used to support such results and conclusions,

(iii) Description of any problems and their resolution.

(6) *Conclusions.* The conclusions shall identify the need for further testing, if that need exists, or justify that current testing and/or available information is adequate for the tier(s) included in the report.

(7) *Appendices.* The appendices shall contain detailed documentation related to the summary information described in this section, including, at a minimum, the following five appendices:

(i) Literature search appendices shall contain:

(A) Copies of literature source outputs, including reference lists and associated abstracts from database searches, printed or on 3½ inch IBM-compatible computer diskettes;

(B) Summary tables organized by health or welfare endpoint and type of emission (e.g., combustion, evaporation, individual emission product), presenting in tabular form the following information at a minimum: number and species of test subjects, exposure concentrations/duration, positive (*i.e.*, abnormal) findings including numbers of test subjects involved, and bibliographic references;

(C) Complete documentation and/or reprints of articles for any previous study relied upon for satisfying emission characterization and/or Tier 2 test requirements; and

(D) Full reports for unpublished/in-house studies.

(ii) Emissions characterization appendices shall contain:

(A) Complete laboratory reports, including documentation of calibration and verification procedures;

(B) Documentation of the emissions generation procedures used; and

(C) Lists of speciated emission products and their emission rates reported in units of grams/mile.

(iii) [Reserved]

(iv) Tier 2 appendices shall contain, for each test performed:

(A) Complete protocol used;

(B) Documentation of emission generation procedures; and

(C) Complete laboratory report in compliance with the reporting standards in § 79.60, including detailed test results and conclusions, and descriptions of any problems encountered and their resolution.

(v) Laboratory certification/accreditation information, personnel credentials, and statements of compliance with the Good Laboratory Practices Standards specified in § 79.60 and the requirements in § 79.53(c)(1).

(d) *Tier 3 Report.* Subject to applicability as specified in § 79.54, each manufacturer of a designated fuel or fuel additive, or each group of such manufacturers pursuant to the provisions of § 79.56, shall submit the following information with respect to each Tier 3 test conducted for such fuels or fuel additives:

(1) The test objectives, including a summary of the reason(s) why such additional testing, beyond Tiers 1 and 2, was required;

(2) Name, address, and telephone number of each testing facility;

(3) Summary of test procedures, results and conclusions;

(4) Complete documentation of test protocols and emission generation procedures, complete laboratory reports in compliance with the reporting standards of § 79.60, detailed test results and conclusions, including references if used to support such results and conclusions, and descriptions of any problems encountered and their resolution; and

(5) Laboratory certification information, personnel credentials, and statements of compliance with the Good Laboratory Practices Standards specified in § 79.60.

(e) *Availability of Information.* (1) All health and safety test data and other information concerning health and welfare effects which is submitted by any manufacturer or group pursuant to §§ 79.52(c), 79.53, or 79.54, shall be considered to be public information and shall be made available to the public by EPA upon request. A reasonable fee may be charged by EPA for copying such materials. Any manufacturer or group who claims that any information concerning the composition of a fuel or fuel additive product, or any other information, submitted under this subpart is confidential business information must state this claim in writing at the time of the submittal.

(2) To assert a business confidentiality claim concerning any information submitted under this subpart, the submitter must:

(i) Clearly mark the information as confidential at each location it appears in the submission; and

(ii) Submit with the information claimed as confidential a separate document setting forth the claim and listing each location at which the information appears in the submission.

(3) If any person subsequently requests access to information submitted under this subpart (other than health and safety test data and other information concerning health and welfare effects), and such information is subject to a claim of business confidentiality, the request and any subsequent disclosure shall be governed by the provisions of 40 CFR part 2.

[59 FR 33093, June 27, 1994, as amended at 62 FR 12572, 12576, Mar. 17, 1997]

§ 79.60 Good laboratory practices (GLP) standards for inhalation exposure health effects testing.

(a) *General Provisions*—(1) *Scope.* (i) This section prescribes good laboratory practices (GLPs) for conducting inhalation exposure studies relating to motor vehicle emissions health effects testing under this part. These directions are intended to ensure the quality and integrity of health effects data submitted pursuant to registration regulations issued under sections 211(b) or 211(e) of the Clean Air Act (CAA) (42 U.S.C. 7545).

(ii) This section applies to any study described by paragraph (a)(1)(i) of this section which any person conducts, initiates, or supports on or after May 27, 1994.

(iii) It is EPA's policy that all health effects data developed under sections 211(b) and (e) of CAA be in accordance with provisions of this section. If data are not developed in accordance with the provisions of this section, EPA may consider such data insufficient to evaluate the health effects of a motor

vehicle's fuel or fuel additive emissions, unless the submitter provides additional information demonstrating that the data are reliable and adequate and EPA determines that the data are sufficient.

(2) *Definitions.* As used in this section, the following terms shall have the meanings specified:

Batch means a specific quantity or lot of a test fuel, additive/base fuel mixture, or reference substance that has been characterized according to § 79.60(f)(1)(i).

CAA means the Clean Air Act.

Carrier means any material which is combined with engine/motor vehicle emissions or a reference substance for administration to a test system. ''Carrier'' includes, but is not limited to, clean, filtered air, water, feed, and nutrient media.

Control atmosphere means clean, filtered air which is administered to the test system in the course of a study for the purpose of establishing a basis for comparison with the test atmosphere for chemical or biological measurements.

Experimental start date means the first date the test atmosphere is applied to the test system.

Experimental termination date means the last date on which data are collected directly from the study.

Person includes an individual, partnership, corporation, association, scientific or academic establishment, government agency, or organizational unit thereof, and any other legal entity.

Quality assurance unit means any person or organizational element, except the study director, designated by testing facility management to perform the duties relating to quality assurance of the studies.

Raw data means any laboratory worksheets, records, memoranda, notes, or exact copies thereof, that are the result of original observations and activities of a study and are necessary for the reconstruction and evaluation of the report of that study. In the event that exact transcripts of raw data have been prepared (e.g., tapes which have been transcribed verbatim, dated, and verified accurate by signature), the exact copy or exact transcript may be substituted for the original source as raw data. ''Raw data'' may include photographs, videotape, microfilm or microfiche copies, computer printouts, magnetic media, including dictated observations, and recorded data from automated instruments.

Reference substance means any chemical substance or mixture, analytical standard, or material other than engine/motor vehicle emissions and/or its carrier, that is administered to or used in analyzing the test system in the course of a study. A ''reference substance'' is used to establish a basis for comparison with the test atmosphere for known chemical or biological measurements, *i.e.*, positive or negative control substance.

Specimen means any material derived from a test system for examination or analysis.

Sponsor means person who initiates and supports, by provision of financial or other resources, a study or a person who submits a study to EPA in response to the CAA Section 211(b) or 211(e) Fuels and Fuel Additives Registration Rule or a testing facility, if it both initiates and actually conducts the study.

Study means any experiment, at one or more test sites, in which a test system is exposed to a test atmosphere under laboratory conditions to determine or help predict the health effects of that exposure in humans, other living organisms, or media.

Study completion date means the date the final report is signed by the study director.

Study director means the individual responsible for the overall conduct of a study.

Study initiation date means the date the protocol is signed by the study director.

Test substance means a vapor and/or aerosol mixture composed of engine/motor vehicle emissions and clean, filtered air which is administered directly, or indirectly, by the inhalation route to a test system in a study which develops data to meet the registration requirements of CAA section 211(b) or (e).

Test system means any animal, microorganism, chemical or physical matrix, to which the test, control, or reference substance is administered or added for

study. This definition also includes appropriate groups or components of the system not treated with the test, control, or reference substance.

Testing facility means a person who actually conducts a study, *i.e.*, actually uses the test substance in a test system. ''Testing facility'' encompasses only those operational units that are being or have been used to conduct studies.

TSCA means the Toxic Substances Control Act (15 U.S.C. 2601 *et seq.*).

(3) *Applicability to studies performed under grants and contracts.* When a sponsor or other person utilizes the services of a consulting laboratory, contractor, or grantee to perform all or a part of a study to which this section applies, it shall notify the consulting laboratory, contractor, or grantee that the service is, or is part of, a study that must be conducted in compliance with the provisions of this section.

(4) *Statement of compliance or non-compliance.* Any person who submits to EPA a test in compliance with registration regulations issued under CAA section 211(b) or section 211(e) shall include in the submission a true and correct statement, signed by the sponsor and the study director, of one of the following types:

(i) A statement that the study was conducted in accordance with this section; or

(ii) A statement describing in detail all differences between the practices used in the study and those required by this section; or

(iii) A statement that the person was not a sponsor of the study, did not conduct the study, and does not know whether the study was conducted in accordance with this section.

(5) *Inspection of a testing facility*. (i) A testing facility shall permit an authorized employee or duly designated representative of EPA, at reasonable times and in a reasonable manner, to inspect the facility and to inspect (and in the case of records also to copy) all records and specimens required to be maintained regarding studies to which this section applies. The records inspection and copying requirements shall not apply to quality assurance unit records of findings and problems, or to actions recommended and taken, except the EPA may seek production of these records in litigation or formal adjudicatory hearings.

(ii) EPA will not consider reliable for purposes of showing that a test substance does or does not present a risk of injury to health or the environment any data developed by a testing facility or sponsor that refuses to permit inspection in accordance with this section. The determination that a study will not be considered reliable does not, however, relieve the sponsor of a required test of any obligation under any applicable statute or regulation to submit the results of the study to EPA.

(6) *Effects of non-compliance.* (i) Pursuant to sections 114, 208, and 211(d) of the CAA, it shall be a violation of this section and a violation of this rule (40 CFR part 79, subpart F) if:

(A) The test is not being or was not conducted in accordance with any requirement of this part; or

(B) Data or information submitted to EPA under part 79, including the statement required by § 79.60(a)(4), include information or data that are false or misleading, contain significant omissions, or otherwise do not fulfill the requirements of this part; or

(C) Entry in accordance with § 79.60(a)(5) for the purpose of auditing test data is denied.

(ii) EPA, at its discretion, may not consider reliable for purposes of showing that a chemical substance or mixture does not present a risk of injury to health any study which was not conducted in accordance with this part. EPA, at its discretion, may rely upon such studies for purposes of showing adverse effects. The determination that a study will not be considered reliable does not, however, relieve the sponsor of a required test of the obligation under any applicable statute or regulation to submit the results of the study to EPA.

(iii) If data submitted in compliance with registration regulations issued under CAA section 211(b) or section 211(e) are not developed in accordance with this section, EPA may determine that the sponsor has not fulfilled its obligations under 40 CFR part 79 and may require the sponsor to develop

data in accordance with the requirements of this section in order to satisfy such obligations.

(b) *Organization and Personnel.* (1) *Personnel.* (i) Each individual engaged in the conduct of or responsible for the supervision of a study shall have education, training, and experience, or combination thereof, to enable that individual to perform the assigned functions.

(ii) Each testing facility shall maintain a current summary of training and experience and job description for each individual engaged in or supervising the conduct of a study.

(iii) There shall be a sufficient number of personnel for the timely and proper conduct of the study according to the protocol.

(iv) Personnel shall take necessary personal sanitation and health precautions designed to avoid contamination of test fuel and additive/base fuel mixtures, test and reference substances, and test systems.

(v) Personnel engaged in a study shall wear clothing appropriate for the duties they perform. Such clothing shall be changed as often as necessary to prevent microbiological, radiological, or chemical contamination of test systems and test, control, and reference substances.

(vi) Any individual found at any time to have an illness that may adversely affect the quality and integrity of the study shall be excluded from direct contact with test systems, fuel and fuel/additive mixtures, test and reference substances and any other operation or function that may adversely affect the study until the condition is corrected. All personnel shall be instructed to report to their immediate supervisors any health or medical conditions that may reasonably be considered to have an adverse effect on a study.

(2) *Testing facility management.* For each study, testing facility management shall:

(i) Designate a study director as described in § 79.60(b)(3) before the study is initiated.

(ii) Replace the study director promptly if it becomes necessary to do so during the conduct of a study.

(iii) Assure that there is a quality assurance unit as described in § 79.60(b)(4).

(iv) Assure that test fuels and fuel/additive mixtures and test and reference substances have been identified as to content, strength, purity, stability, and uniformity, as applicable.

(v) Assure that personnel, resources, facilities, equipment, materials and methodologies are available as scheduled.

(vi) Assure that personnel clearly understand the functions they are to perform.

(vii) Assure that any deviations from these regulations reported by the quality assurance unit are communicated to the study director and corrective actions are taken and documented.

(3) *Study director.* For each study, a scientist or other professional person with a doctorate degree or equivalent in toxicology or other appropriate discipline shall be identified as the study director. The study director has overall responsibility for the technical conduct of the study, as well as for the interpretation, analysis, documentation, and reporting of results, and represents the single point of study control. The study director shall assure that:

(i) The protocol, including any changes, is approved as provided by § 79.60(g)(1)(i) and is followed;

(ii) All experimental data, including observations of unanticipated responses of the test system are accurately recorded and verified;

(iii) Unforeseen circumstances that may affect the quality and integrity of the study are noted when they occur, and corrective action is taken and documented;

(iv) Test systems are as specified in the protocol;

(v) All applicable good laboratory practice regulations are followed; and

(vi) All raw data, documentation, protocols, specimens, and final reports are archived properly during or at the close of the study.

(4) *Quality assurance unit.* A testing facility shall have a quality assurance unit which shall be responsible for monitoring each study to assure management that the facilities, equipment, personnel, methods, practices, records, and controls are in conformance with

the regulations in this section. For any given study, the quality assurance unit shall be entirely separate from and independent of the personnel engaged in the direction and conduct of that study. The quality assurance unit shall conduct inspections and maintain records appropriate to the study.

(i) *Quality assurance unit duties.* (A) Maintain a copy of a master schedule sheet of all studies conducted at the testing facility indexed by test substance and containing the test system, nature of study, date study was initiated, current status of each study, identity of the sponsor, and name of the study director.

(B) Maintain copies of all protocols pertaining to all studies for which the unit is responsible.

(C) Inspect each study at intervals adequate to ensure the integrity of the study and maintain written and properly signed records of each periodic inspection showing the date of the inspection, the study inspected, the phase or segment of the study inspected, the person performing the inspection, findings and problems, action recommended and taken to resolve existing problems, and any scheduled date for re-inspection. Any problems which are likely to affect study integrity found during the course of an inspection shall be brought to the attention of the study director and management immediately.

(D) Periodically submit to management and the study director written status reports on each study, noting any problems and the corrective actions taken.

(E) Determine that no deviations from approved protocols or standard operating procedures were made without proper authorization and documentation.

(F) Review the final study report to assure that such report accurately describes the methods and standard operating procedures, and that the reported results accurately reflect the raw data of the study.

(G) Prepare and sign a statement to be included with the final study report which shall specify the dates inspections were made and findings reported to management and to the study director.

(ii) The responsibilities and procedures applicable to the quality assurance unit, the records maintained by the quality assurance unit, and the method of indexing such records shall be in writing and shall be maintained. These items including inspection dates, the study inspected, the phase or segment of the study inspected, and the name of the individual performing the inspection shall be made available for inspection to authorized employees or duly designated representatives of EPA.

(iii) An authorized employee or a duly designated representative of EPA shall have access to the written procedures established for the inspection and may request test facility management to certify that inspections are being implemented, performed, documented, and followed up in accordance with this paragraph.

(c) *Facilities*—(1) *General.* Each testing facility shall be of suitable size and construction to facilitate the proper conduct of studies. Testing facilities which are not completely located within an indoor controlled environment shall be of suitable location/proximity to facilitate the proper conduct of studies. Testing facilities shall be designed so that there is a degree of separation that will prevent any function or activity from having an adverse effect on the study.

(2) *Test system care facilities.* (i) A testing facility shall have a sufficient number of animal rooms or other test system areas, as needed, to ensure proper separation of species or test systems, quarantine or isolation of animals or other test systems, and routine or specialized housing of animals or other test systems.

(ii) A testing facility shall have a number of animal rooms or other test system areas separate from those described in paragraph (a) of this section to ensure isolation of studies being done with test systems or test, control, and reference substances known to be biohazardous, including volatile atmospheres and aerosols, radioactive materials, and infectious agents. The animal handling facility must operate under the supervision of a veterinarian.

(iii) Separate areas shall be provided, as appropriate, for the diagnosis, treatment, and control of laboratory test system diseases. These areas shall provide effective isolation for the housing of test systems either known or suspected of being diseased, or of being carriers of disease, from other test systems.

(iv) Facilities shall have proper provisions for collection and disposal of contaminated air, water, or other spent materials. When animals are housed, facilities shall exist for the collection and disposal of all animal waste and refuse or for safe sanitary storage of waste before removal from the testing facility. Disposal facilities shall be so provided and operated as to minimize vermin infestation, odors, disease hazards, and environmental contamination.

(v) Facilities shall have provisions to regulate environmental conditions (e.g., temperature, humidity, day length, etc.) as specified in the protocol.

(3) *Test system supply/operation areas.* (i) There shall be storage areas, as needed, for feed, bedding, supplies, and equipment. Storage areas for feed and bedding shall be separated from areas where the test systems are located and shall be protected against infestation or contamination. Perishable supplies shall be preserved by appropriate means.

(ii) Separate laboratory space and other space shall be provided, as needed, for the performance of the routine and specialized procedures required by studies.

(4) *Facilities for handling test fuels and fuel/additive mixtures and reference substances.* (i) As necessary to prevent contamination or mixups, there shall be separate areas for:

(A) Receipt and storage of the test fuels and fuel/additive mixtures and reference substances;

(B) Mixing of the test fuels, fuel/additive mixtures, and reference substances with a carrier, *i.e.*, liquid hydrocarbon; and

(C) Storage of the test fuels, fuel/additive mixtures, and reference substance/carrier mixtures.

(ii) Storage areas for test fuels and fuel/additive mixtures and reference substances and for reference mixtures shall be separate from areas housing the test systems and shall be adequate to preserve the identity, strength, purity, and stability of the substances and mixtures.

(5) *Specimen and data storage facilities.* Space shall be secured for archives for the storage and retrieval of all raw data and specimens from completed studies.

(d) *Equipment*—(1) *Equipment design.* Equipment used in the generation, measurement, or assessment of data and equipment used for facility environmental control shall be of appropriate design and adequate capacity to function according to the protocol and shall be suitably located for operation, inspection, cleaning, and maintenance.

(2) *Maintenance and calibration of equipment.* (i) Equipment shall be adequately inspected, cleaned, and maintained. Equipment used for the generation, measurement, or assessment of data shall be adequately tested, calibrated, and/or standardized.

(ii) The written standard operating procedures required under § 79.60(e)(1)(ii)(K) shall set forth in sufficient detail the methods, materials, and schedules to be used in the routine inspection, cleaning, maintenance, testing, calibration, and/or standardization of equipment, and shall specify, when appropriate, remedial action to be taken in the event of failure or malfunction of equipment. The written standard operating procedures shall designate the person responsible for the performance of each operation.

(iii) Written records shall be maintained of all inspection, maintenance, testing, calibrating, and/or standardizing operations. These records, containing the date of the operation, shall describe whether the maintenance operations were routine and followed the written standard operating procedures. Written records shall be kept of nonroutine repairs performed on equipment as a result of failure and malfunction. Such records shall document the nature of the defect, how and when the defect was discovered, and any remedial action taken in response to the defect.

(e) *Testing Facilities Operation*—(1) *Standard operating procedures.* (i) A

testing facility shall have standard operating procedures in writing, setting forth study methods that management is satisfied are adequate to insure the quality and integrity of the data generated in the course of a study. All deviations in a study from standard operating procedures shall be authorized by the study director and shall be documented in the raw data. Significant changes in established standard operating procedures shall be properly authorized in writing by management.

(ii) Standard operating procedures shall be established for, but not limited to, the following:

(A) Test system room preparation;

(B) Test system care;

(C) Receipt, identification, storage, handling, mixing, and method of sampling of test fuels and fuel/additive mixtures and reference substances;

(D) Test system observations;

(E) Laboratory or other tests;

(F) Handling of test animals found moribund or dead during study;

(G) Necropsy or postmortem examination of test animals;

(H) Collection and identification of specimens;

(I) Histopathology

(J) Data handling, storage and retrieval.

(K) Maintenance and calibration of equipment.

(L) Transfer, proper placement, and identification of test systems.

(iii) Each laboratory or other study area shall have immediately available manuals and standard operating procedures relative to the laboratory procedures being performed. Published literature may be used as a supplement to standard operating procedures.

(iv) A historical file of standard operating procedures, and all revisions thereof, including the dates of such revisions, shall be maintained.

(2) *Reagents and solutions.* All reagents and solutions in the laboratory areas shall be labeled to indicate identity, titer or concentration, storage requirements, and expiration date. Deteriorated or outdated reagents and solutions shall not be used.

(3) *Animal and other test system care.* (i) There shall be standard operating procedures for the housing, feeding, handling, and care of animals and other test systems.

(ii) All newly received test systems from outside sources shall be isolated and their health status or appropriateness for the study shall be evaluated. This evaluation shall be in accordance with acceptable veterinary medical practice or scientific methods.

(iii) At the initiation of a study, test systems shall be free of any disease or condition that might interfere with the purpose or conduct of the study. If during the course of the study, the test systems contract such a disease or condition, the diseased test systems shall be isolated, if necessary. These test systems may be treated for disease or signs of disease provided that such treatment does not interfere with the study. The diagnosis, authorization of treatment, description of treatment, and each date of treatment shall be documented and shall be retained.

(iv) When laboratory procedures require test animals to be manipulated and observed over an extended period of time or when studies require test animals to be removed from and returned to their housing units for any reason (e.g., cage cleaning, treatment, etc.), these test systems shall receive appropriate identification (e.g., tattoo, color code, etc.). Test system identification shall conform with current laboratory animal handling practice. All information needed to specifically identify each test system within the test system-housing unit shall appear on the outside of that unit. Suckling animals are excluded from the requirement of individual identification unless otherwise specified in the protocol.

(v) Except as specified in paragraph (e)(3)(v)(A) of this section, test animals of different species shall be housed in separate rooms when necessary. Test animals of the same species, but used in different studies, shall not ordinarily be housed in the same room when inadvertent exposure to the test or reference substances or test system mixup could affect the outcome of either study. If such mixed housing is necessary, adequate differentiation by space and identification shall be made.

(A) Test systems that may be used in multispecies tests need not be housed in separate rooms, provided that they

are adequately segregated to avoid mixup and cross-contamination.

(B) [Reserved]

(vi) Cages, racks, pens, enclosures, and other holding, rearing, and breeding areas, and accessory equipment, shall be cleaned and sanitized at appropriate intervals.

(vii) Feed and water used for the test animals shall be analyzed periodically to ensure that contaminants known to be capable of interfering with the study and reasonably expected to be present in such feed or water are not present at greater than trace levels. Documentation of such analyses shall be maintained as raw data.

(viii) Bedding used in animal cages or pens shall not interfere with the purpose or conduct of the study and shall be changed as often as necessary to keep the animals dry and clean.

(ix) If any pest control materials are used, the use shall be documented. Cleaning and pest control materials that interfere with the study shall not be used.

(x) All test systems shall be acclimatized to the environmental conditions of the test, prior to their use in a study.

(f) T*est fuels, additive/base fuel mixtures, and reference substances*—(1) *Test fuel, fuel/additive mixture, and reference substance identity*. (i) The product brand name/service mark, strength, purity, content, or other characteristics which appropriately define the test fuel, fuel/additive mixture, or reference substance shall be reported for each batch and shall be documented before its use in a study. Methods of synthesis, fabrication, or derivation, as appropriate, of the test fuel, fuel/additive mixture, or reference substance shall be documented by the sponsor or the testing facility, and such location of documentation shall be specified.

(ii) The stability of test fuel, fuel/additive mixture, and reference substances under storage conditions at the test site shall be known for all studies.

(2) *Test fuel, additive/base fuel mixture, and reference substance handling.* Procedures shall be established for a system for the handling of the test fuel, fuel/additive mixture, and reference substance(s) to ensure that:

(i) There is proper storage.

(ii) Distribution is made in a manner designed to preclude the possibility of contamination, deterioration, or damage.

(iii) Proper identification is maintained throughout the distribution process.

(iv) The receipt and distribution of each batch is documented. Such documentation shall include the date and quantity of each batch distributed or returned.

(3) Mixtures of test emissions or reference solutions with carriers.

(i) For test emissions or each reference substance mixed with a carrier, tests by appropriate analytical methods shall be conducted:

(A) To determine the uniformity of the test substance and to determine, periodically, the concentration of the test emissions or reference substance in the mixture;

(B) When relevant to the conduct of the experiment, to determine the solubility of each reference substance in the carrier mixture before the experimental start date; and

(C) To determine the stability of test emissions or a reference solution in the test substance before the experimental start date or concomitantly according to written standard operating procedures, which provide for periodic analysis of each batch.

(ii) Where any of the components of the reference substance/carrier mixture has an expiration date, that date shall be clearly shown on the container. If more than one component has an expiration date, the earliest date shall be shown.

(iii) If a chemical or physical agent is used to facilitate the mixing of a test substance with a carrier, assurance shall be provided that the agent does not interfere with the integrity of the test.

(g) *Protocol for and conduct of a study*—(1) *Protocol.* (i) Each study shall have a written protocol that clearly indicates the objectives and all methods for the conduct of the study. The protocol shall contain but shall not be limited to the following information:

(A) A descriptive title and statement of the purpose of the study.

(B) Identification of the test fuel, fuel/additive mixture, and reference

substance by name, chemical abstracts service (CAS) number or code number, as applicable.

(C) The name and address of the sponsor and the name and address of the testing facility at which the study is being conducted.

(D) The proposed experimental start and termination dates.

(E) Justification for selection of the test system, as necessary.

(F) Where applicable, the number, body weight, sex, source of supply, species, strain, substrain, and age of the test system.

(G) The procedure for identification of the test system.

(H) A description of the experimental design, including methods for the control of bias.

(I) Where applicable, a description and/or identification of the diet used in the study. The description shall include specifications for acceptable levels of contaminants that are reasonably expected to be present in the dietary materials and are known to be capable of interfering with the purpose or conduct of the study if present at levels greater than established by the specifications.

(J) Each concentration level, expressed in milligrams per cubic meter of air or other appropriate units, of the test or reference substance to be administered and the frequency of administration.

(K) The type and frequency of tests, analyses, and measurements to be made.

(L) The records to be maintained.

(M) The date of approval of the protocol by the sponsor and the dated signature of the study director.

(N) A statement of the proposed statistical method.

(ii) All changes in or revisions of an approved protocol and the reasons therefor shall be documented, signed by the study director, dated, and maintained with the protocol.

(2) *Conduct of a study.* (i) The study shall be conducted in accordance with the protocol.

(ii) The test systems shall be monitored in conformity with the protocol.

(iii) Specimens shall be identified by test system, study, nature, and date of collection. This information shall be located on the specimen container or shall accompany the specimen in a manner that precludes error in the recording and storage of data.

(iv) In animal studies where histopathology is required, records of gross findings for a specimen from postmortem observations shall be available to a pathologist when examining that specimen histopathologically.

(v) All data generated during the conduct of a study, except those that are generated by automated data collection systems, shall be recorded directly, promptly, and legibly in ink. All data entries shall be dated on the day of entry and signed or initialed by the person entering the data. Any change in entries shall be made so as not to obscure the original entry, shall indicate the reason for such change, and shall be dated and signed or identified at the time of the change. In automated data collection systems, the individual responsible for direct data input shall be identified at the time of data input. Any change in automated data entries shall be made so as not to obscure the original entry, shall indicate the reason for change, shall be dated, and the responsible individual shall be identified.

(h) *Records and Reports*—(1) *Reporting of study results.* (i) A final report shall be prepared for each study and shall include, but not necessarily be limited to, the following:

(A) Name and address of the facility performing the study and the dates on which the study was initiated and was completed, terminated, or discontinued.

(B) Objectives and procedures stated in the approved protocol, including any changes in the original protocol.

(C) Statistical methods employed for analyzing the data.

(D) The test fuel, additive/base fuel mixture, and test and reference substances identified by name, chemical abstracts service (CAS) number or code number, strength, purity, content, or other appropriate characteristics.

(E) Stability, and when relevant to the conduct of the study, the solubility of the test emissions and reference substances under the conditions of administration.

(F) A description of the methods used.

(G) A description of the test system used. Where applicable, the final report shall include the number of animals or other test organisms used, sex, body weight range, source of supply, species, strain and substrain, age, and procedure used for identification.

(H) A description of the concentration regimen as daily exposure period, *i.e.*, number of hours, and exposure duration, *i.e.*, number of days.

(I) A description of all circumstances that may have affected the quality or integrity of the data.

(J) The name of the study director, the names of other scientists or professionals and the names of all supervisory personnel, involved in the study.

(K) A description of the transformations, calculations, or operations performed on the data, a summary and analysis of the data, and a statement of the conclusions drawn from the analysis.

(L) The signed and dated reports of each of the individual scientists or other professionals involved in the study, including each person who, at the request or direction of the testing facility or sponsor, conducted an analysis or evaluation of data or specimens from the study after data generation was completed.

(M) The locations where all specimens, raw data, and the final report are to be kept or stored.

(N) The statement, prepared and signed by the quality assurance unit, as described in § 79.60(b)(4)(i)(G).

(ii) The final report shall be signed and dated by the study director.

(iii) Corrections or additions to a final report shall be in the form of an amendment by the study director. The amendment shall clearly identify that part of the final report that is being added to or corrected and the reasons for the correction or addition, and shall be signed and dated by the person responsible. Modification of a final report to comply with the submission requirements of EPA does not constitute a correction, addition, or amendment to a final report.

(iv) A copy of the final report and of any amendment to it shall be maintained by the sponsor and the test facility.

(2) *Storage and retrieval of records and data.* (i) All raw data, documentation, records, protocols, specimens, and final reports generated as a result of a study shall be retained. Specimens obtained from mutagenicity tests, wet specimens of blood, urine, feces, and biological fluids, do not need to be retained after quality assurance verification. Correspondence and other documents relating to interpretation and evaluation of data, other than those documents contained in the final report, also shall be retained.

(ii) All raw data, documentation, protocols, specimens, and interim and final reports shall be archived for orderly storage and expedient retrieval. Conditions of storage shall minimize deterioration of the documents or specimens in accordance with the requirements for the time period of their retention and the nature of the documents of specimens. A testing facility may contract with commercial archives to provide a repository for all material to be retained. Raw data and specimens may be retained elsewhere provided that the archives have specific reference to those other locations.

(iii) An individual shall be identified as responsible for the archiving of records.

(iv) Access to archived material shall require authorization and documentation.

(v) Archived material shall be indexed to permit expedient retrieval.

(3) *Retention of records.* (i) Record retention requirements set forth in this section do not supersede the record retention requirements of any other regulations in this subchapter.

(ii) Except as provided in paragraph (h)(3)(iii) of this section, documentation records, raw data, and specimens pertaining to a study and required to be retained by this part shall be archived for a period of at least ten years following the completion of the study.

(iii) Wet specimens, samples of test fuel, additive/base fuel mixtures, or reference substances, and specially prepared material which are relatively fragile and differ markedly in stability

and quality during storage, shall be retained only as long as the quality of the preparation affords evaluation. Specimens obtained from mutagenicity tests, wet specimens of blood, urine, feces, biological fluids, do not need to be retained after quality assurance verification. In no case shall retention be required for a longer period than that set forth in paragraph (h)(3)(ii) of this section.

(iv) The master schedule sheet, copies of protocols, and records of quality assurance inspections, as required by § 79.60(b)(4)(iii) shall be maintained by the quality assurance unit as an easily accessible system of records for the period of time specified in paragraph (h)(3)(ii) of this section.

(v) Summaries of training and experience and job descriptions required to be maintained by § 79.60(b)(1)(ii) may be retained along with all other testing facility employment records for the length of time specified in paragraph (h)(3)(ii) of this section.

(vi) Records and reports of the maintenance and calibration and inspection of equipment, as required by § 79.60(d)(2) (ii) and (iii), shall be retained for the length of time specified in paragraph (h)(3)(ii) of this section.

(vii) If a facility conducting testing or an archive contracting facility goes out of business, all raw data, documentation, and other material specified in this section shall be transferred to the sponsor of the study for archival.

(viii) Records required by this section may be retained either as original records or as true copies such as photocopies, microfilm, microfiche, or other accurate reproductions of the original records.

§ 79.61 Vehicle emissions inhalation exposure guideline.

(a) *Purpose.* This guideline provides additional information on methodologies required to conduct health effects tests involving inhalation exposures to vehicle combustion emissions from fuels or fuel/additive mixtures. Where this guideline and the other health effects testing guidelines in 40 CFR 79.62 through 79.68 specify differing values for the same test parameter, the specifications in the individual health test guideline shall prevail for that health effect endpoint.

(b) *Definitions.* For the purposes of this section the following definitions apply.

Acute inhalation study means a short-term toxicity test characterized by a single exposure by inhalation over a short period of time (at least 4 hours and less than 24 hours), followed by at least 14 days of observation.

Aerodynamic diameter means the diameter of a sphere of unit density that has the same settling velocity as the particle of the test substance. It is used to compare particles of different sizes, densities and shapes, and to predict where in the respiratory tract such particles may be deposited. It applies to the size of aerosol particles.

Chronic inhalation study means a prolonged and repeated exposure by inhalation for the life span of the test animal; technically, two years in the rat.

Concentration means an exposure level. Exposure is expressed as weight or volume of test aerosol/substance per volume of air, usually mg/m^3 or as parts per million (ppm) over a given time period. Micrograms per cubic meter ($\mu g/m^3$) or parts per billion may be appropriate, as well.

Cumulative toxicity means the adverse effects of repeated exposures occurring as a result of prolonged action or increased concentration of the administered test substance or its metabolites in the susceptible tissues.

Inhalable diameter means that aerodynamic diameter of a particle which is considered to be inhalable for the organism. It is used to refer to particles which are capable of being inhaled and may be deposited anywhere within the respiratory tract from the trachea to the alveoli.

Mass median aerodynamic diameter (MMAD) means the calculated aerodynamic diameter, which divides the particles of an aerosol in half based on the mass of the particles. Fifty percent of the particles in mass will be larger than the median diameter, and fifty percent will be smaller than the median diameter. MMAD describes the particle distribution of any aerosol

based on the weight and size of the particles. MMAD and the geometric standard deviation describe the particle-size distribution.

Material safety data sheet (MSDS) means documentation or information on the physical, chemical, and hazardous characteristics of a given chemical, usually provided by the product's manufacturer.

Reynolds number means a dimensionless number that is proportional to the ratio of inertial forces to frictional forces acting on a fluid. It quantitatively provides a measure of whether flow is laminar or turbulent. A fluid traveling through a pipe is fully developed into a laminar flow for a Reynolds number less than 2000, and fully developed into a turbulent flow for a Reynolds number greater than 4000.

Subacute inhalation toxicity means the adverse effects occurring as a result of the repeated daily exposure of experimental animals to a chemical by inhalation for part (less than 10 percent) of a lifespan; generally, less than 90 days.

Subchronic inhalation study means a repeated exposure by inhalation for part (approximately 10 percent) of a life span of the exposed test animal.

Toxic effect means an adverse change in the structure or function of an experimental animal as a result of exposure to a chemical substance.

(c) *Principles and design criteria of inhalation exposure systems.* Proper conduct of inhalation toxicity studies of the emissions of fuels and additive/fuel mixtures requires that the exposure system be designed to ensure the controlled generation of the exposure atmosphere, the adequate dilution of the test emissions, delivery of the diluted exposure atmosphere to the test animals, and use of appropriate exposure chamber systems selected to meet criteria for a given exposure study.

(1) *Emissions generation.* Emissions shall be generated according to the specifications in 40 CFR 79.57.

(2) *Dilution and delivery systems.*

(i) The delivery system is the means used to transport the emissions from the generation system to the exposure system. The dilution system is generally a component of the delivery system.

(ii) Dilution provides control of the emissions concentration delivered to the exposure system, serving the function of diluting the associated combustion gases, such as carbon monoxide, carbon dioxide, nitrogen oxides, sulfur dioxide and other noxious gases and vapors, to levels that will ensure that there are no significant or measurable responses in the test animals as a result of exposure to the combustion gases. The formation of particle species is strongly dependent on the dilution rate, as well.

(iii) The engine exhaust system shall connect to the first-stage-dilution section at 90° to the axis of the dilution section. This is then connected to a right angle elbow on the center line of the dilution section. Engine emissions are injected through the elbow so that exhaust flow is concurrent to dilution flow.

(iv) *Materials.* In designing the dilution and delivery systems, the use of plastic, e.g., PVC and similar materials, copper, brass, and aluminum pipe and tubing shall be avoided if there exists a possibility of chemical reaction occurring between emissions and tubing. Stainless steel pipe and tubing is recommended as the best choice for most emission dilution and delivery applications, although glass and teflon may be appropriate, as well.

(v) *Flow requirements.* (A) Conduit for dilute raw emissions shall be of such dimensions as to provide residence times for the emissions on the order of less than one second to several seconds before the emissions are further diluted and introduced to the test chambers. With the high flow rates in the dilute raw emissions conduit, it will be necessary to sample various portions of the dilute emissions for delivering differing concentrations to the test chambers. The unused portions of the emissions stream are normally exhausted to the atmosphere outside of the exposure facility.

(B) Dimensions of the dilute raw exhaust conduit shall be such that, at a minimum, the flow Reynolds number is 70,000 or greater (see Mokler, *et al.*, 1984 in paragraph (f)(13) of this section). This will maintain highly turbulent flow conditions so that there is more

complete mixing of the exhaust emissions.

(C) *Wall losses.* The delivery system shall be designed to minimize wall losses. This can be done by sizing the tubing or pipe to maintain laminar flow of the diluted emissions to the exposure chamber. A flow Reynolds number of 1000–3000 will ensure minimal wall losses. Also, the length of and number and degree of bends in the delivery lines to the exposure chamber system shall be minimized.

(D) Whole-body exposure vs. nose-only exposure delivery systems. Flow rates through whole-body chamber systems are of the order of 100 liters per minute to 500 liters per minute. Nose-only systems are on the order of less than 50 liters per minute. To maintain laminar flow conditions, the principles described in paragraph (c)(2)(v)(C) of this section apply to both systems.

(vi) *Dilution requirements.* (A) To maintain the water vapor, and dissolved organic compounds, in the raw exhaust emissions stream, a manufacturer/tester will initially dilute one part emissions with a minimum of five parts clean, filtered air (see Hinners, *et al.*, 1979 in paragraph (f)(11) of this section). Depending on the water vapor content of a particular fuel/additive mixture's combustion emissions and the humidity of the dilution air, initial exhaust dilutions as high as 1:15 or 1:20 may be necessary to maintain the general character of the exhaust as it cools, e.g., M100. At this point, it is expected that the exhaust stream would be further diluted to more appropriate levels for rodent health effects testing.

(B) A maximum concentration (minimum dilution) of the raw exhaust going into the test animal cages is anticipated to lie in the range between 1:5 and 1:50 exhaust emissions to clean, filtered air. The minimum concentration (maximum dilution) of raw exhaust for health effects testing is anticipated to be in range between 1:100 and 1:150. Individual manufacturers will treat these ranges as approximations only and will determine the optimum range of emission concentrations to elicit effects in Tier 2 health testing for their particular fuel/fuel additive mixture.

(3) *Exposure chamber systems*—(i) *Referenced Guidelines.* (A) The U.S. Department of Health and Human Services ''Guide for the Care and Use of Laboratory Animals'' (*Guide*), 1985 cited in paragraph (c)(3)(ii)(A)(*4*), and in paragraphs (d)(2)(i), (d)(2)(ii), (d)(2)(iii), (d)(4)(ii), and (d)(4)(iii) of this section, has been incorporated by reference.

(B) This incorporation by reference was approved by the Director of the Federal Register in accordance with 5 U.S.C. 552(a) and 1 CFR part 51. Copies may be purchased from the Superintendent of Documents, U.S. Government Printing Office, Washington, DC 20402. Copies may be inspected at U.S. EPA, OAR, 401 M Street SW., Washington, DC, 20460 or at the Office of the Federal Register, 800 North Capitol Street NW., suite 700, Washington, DC.

(ii) *Exposure chambers.* There are two basic types of dynamic inhalation exposure chambers, whole-body chambers and nose-/head-only exposure chambers (see Cheng and Moss, 1989 in paragraph (f)(8) of this section).

(A) *Whole-body chambers.* (*1*) The flow rate through a chamber shall be maintained at 15 air changes per hour.

(*2*) The chambers are usually maintained at a slightly negative pressure (0.5 to 1.5 inch of water) to prevent leakage of test substance into the exposure room.

(*3*) The exposure chamber shall be designed in such a way as to provide uniform distribution of exposure concentrations in all compartments (see Cheng *et al.*, 1989 in paragraph (f)(7) of this section).

(*4*) Animals are housed in separate compartments inside the chamber, where the whole surface area of an animal is exposed to the test material. The spaces required for different animal species shall follow the *Guide*. In general, the volume of animal bodies occupy less than 5 percent of the chamber volume.

(B) *Head/nose-only exposure chambers.* (*1*) In head/nose-only exposure chambers, only the head (oronasal) portion of the animal is exposed to the test material.

(*2*) The chamber volume and flow rates are much less than in the whole-body exposure chambers because the subjects are usually restrained in a tube holder where the animal's breathing can be easily monitored. The head/

nose-only exposure chamber is suitable for short-term exposures or when use of a small amount of test material is required.

(iii) Since whole-body exposure appears to be the least stressful mode of exposure, it is the preferred method. In general, head/nose only exposure, which is sometimes used to avoid concurrent exposure by the dermal or oral routes, *i.e.*, grooming, is not recommended because of the stress accompanying the restraining of the animals. However, there may be specific instances where it may be more appropriate than whole-body exposure. The tester shall provide justification for its selection.

(d) *Inhalation exposure procedures*—(1) *Animal selection.* (i) The rat is the preferred species for vehicle emission inhalation health effects testing. Commonly used laboratory strains shall be used. Any rodent species may be used, but the tester shall provide justification for the choice of that species.

(ii) Young adult animals, approximately ten weeks of age for the rat, shall be used. At the commencement of the study, the weight variation of animals used shall not exceed ±20 percent of the mean weight for each sex. Animals shall be randomly assigned to treatment and control groups according to their weight.

(iii) An equal number of male and female rodents shall be used at each concentration level. Situations may arise where use of a single sex may be appropriate. Females, in general, shall be nulliparous and nonpregnant.

(iv) The number of animals used at each concentration level and in the control group(s) depends on the type of study, number of biological end points used in the toxicity evaluation, the pre-determined sensitivity of detection and power of significance of the study, and the animal species. For an acute study, at least five animals of each sex shall be used in each test group. For both the subacute and subchronic studies, at least 10 rodents of each sex shall be used in each test group. For a chronic study, at least 20 male and 20 female rodents shall be used in each test group.

(A) If interim sacrifices are planned, the number of animals shall be increased by the number of animals scheduled to be sacrificed during the course of the study.

(B) For a chronic study, the number of animals at the termination of the study must be adequate for a meaningful and valid statistical evaluation of chronic effects.

(v) A concurrent control group is required. This group shall be exposed to clean, filtered air under conditions identical to those used for the group exposed to the test atmosphere.

(vi) The same species/strain shall be used to make comparisons between fuel-only and fuel/additive mixture studies. If another species/strain is used, the tester shall provide justification for its selection.

(2) *Animal handling and care.* (i) A key element in the conduct of inhalation exposure studies is the proper handling and care of the test animal population. Therefore, the exposure conditions must conform strictly with the conditions for housing and animal care and use set forth in the *Guide.*

(ii) In whole-body exposure chambers, animals shall be housed in individual caging. The minimum cage size per animal will be in accordance with instructions set forth in the *Guide.*

(iii) Chambers shall be cleaned and maintained in accordance with recommendations and schedules set forth in the *Guide.*

(A) Observations shall be made daily with appropriate actions taken to minimize loss of animals to the study (e.g., necropsy or refrigeration of animals found dead and isolation or sacrifice of weak or moribund animals). Exposure systems using head/nose-only exposure chambers require no special daily chamber maintenance. Chambers shall be inspected to ensure that they are clean, and that there are no obstructions in the chamber which would restrict air flow to the animals. Whole-body exposure chambers will be inspected on a minimum of twice daily, once before exposures and once after exposures.

(B) Signs of toxicity shall be recorded as they are observed, including the time of onset, degree, and duration.

(C) Cage-side observations shall include, but are not limited to: changes

in skin, fur, eye and mucous membranes, respiratory, autonomic, and central nervous systems, somatomotor activity, and behavioral patterns. Particular attention shall be directed to observation of tremors, convulsions, salivation, diarrhea, lethargy, sleep, and coma.

(iv) Food and water will be withheld from animals for head/nose-only exposure systems. For whole-body-exposure systems, water only may be provided. When the exposure generation system is not operating, food will be available *ad libitum*. During operation of the generation system, food will be withheld to avoid possible contamination by emissions.

(v) At the end of the study period, all survivors in the main study population shall be sacrificed. Moribund animals shall be removed and sacrificed when observed.

(3) *Concentration levels and selection*. (i) In acute and subacute toxicity tests, at least three exposure concentrations and a control group shall be used and spaced appropriately to produce test groups with a range of toxic effects and mortality rates. The data shall be sufficient to produce a concentration-response curve and permit an acceptable estimation of the median lethal concentration.

(ii) In subchronic and chronic toxicity tests, testers shall use at least three different concentration levels, with a control exposure group, to determine a concentration-response relationship. Concentrations shall be spaced appropriately to produce test groups with a range of toxic effects. The concentration-response data may also be sufficient to determine a NOAEL, unless the result of a limit test precludes such findings. The criteria for selecting concentration levels has been published (40 CFR 798.2450 and 798.3260).

(A) The highest concentration shall result in toxic effects but not produce an incidence of fatalities which would prevent a meaningful evaluation of the study.

(B) The lowest concentration shall not produce toxic effects which are directly attributable to the test exposure. Where there is a useful estimation of human exposure, the lowest concentration shall exceed this.

(C) The intermediate concentration level(s) shall produce minimal observable toxic effects. If more than one intermediate concentration level is used, the concentrations shall be spaced to produce a gradation of toxic effects.

(D) In the low, intermediate, and control exposure groups, the incidence of fatalities shall be low to absent, so as not to preclude a meaningful evaluation of the results.

(4) Exposure chamber environmental conditions. The following environmental conditions in the exposure chamber are critical to the maintenance of the test animals: flow; temperature; relative humidity; lighting; and noise.

(i) Filtered and conditioned air shall be used during exposure, to dilute the exhaust emissions, and during non- exposure periods to maintain environmental conditions that are free of trace gases, dusts, and microorganisms on the test animals. Twelve to fifteen air changes per hour will be provided at all times to whole-body-exposure chambers. The minimum air flow rate for head/nose-only exposure chambers will be a function of the number of animals and the average minute volume of the animals:

$$Q_{minimum}(L/min)=2 \times \text{number of animals} \times \text{average minute volume}$$

(see Cheng and Moss, 1989 in paragraph (f)(8) of this section).

(ii) Recommended ranges of temperature for various species are given in the *Guide*. The recommended temperature ranges will be used for establishing temperature conditions of whole-body-exposure chambers. For rodents in whole-body-exposure chambers, the recommended temperature is 22 °C +/− 2 °C and for rabbits, it is 20 °C +/− 3 °C. Temperature ranges have not been established for head/nose-only tubes; however, recommended maximum temperature limits have been established at the Inhalation Toxicology Research Institute (see Barr, 1988 in paragraph (f)(1) of this section). Maximum temperature for rats and mice in head/nose-only tubes is 23 °C.

(iii) *Relative humidity*. The relative humidity in the chamber air is important for heat balance and shall be

maintained between 40 percent and 60 percent, but in certain instances, this may not be practicable. Testers shall follow *Guide* recommends for a 30 percent to 70 percent relative humidity range for rodents in exposure chambers.

(iv) *Lighting.* Light intensity of 30 foot candles at 3 ft. from the floor of the exposure facility is recommended (see Rao, 1986 in paragraph (f)(16) of this section).

(5) *Exposure conditions.* Unless precluded by the requirements of a particular test protocol, animal subjects shall be exposed to the test atmosphere based on a nominal 5-day-per-week regimen, subject to the following rules:

(i) Each daily exposure must be at least 6 hours plus the time necessary to build the chamber atmosphere to 90 percent of the target exposure atmosphere. Interruptions of daily exposures caused by technical difficulties, if infrequent in occurrence and limited in duration, may be made up the same day by adding equivalent exposure time after the technical problem has been corrected and the exposure atmosphere restored to the required level.

(ii) Normally, no more than two non-exposure days may occur consecutively during the test period. However, if a third consecutive non-exposure day should occur due to circumstances beyond the tester's control, it may be remedied by adding a supplementary exposure day. Federal and other holidays do not constitute such circumstances. Whenever possible, a make-up day should be taken at the first opportunity, i.e., on the next day which would otherwise have been an intentional non-exposure day. If a compensatory day must be scheduled at the end of the standard test period, then it may occur either:

(A) Immediately following the last standard exposure day, with no intervening non-exposure days; or

(B) With up to two intervening non-exposure days, provided that no fewer than two consecutive compensatory exposure days are completed before the test is terminated and the animals sacrificed.

(iii) Except as allowed in paragraph (d)(5)(ii)(B) of this section, in no case shall there be fewer than four exposure days per week at any time during the test period.

(iv) A nominal 90-day (13-week) subchronic test period shall include no fewer than 63 total exposure days.

(6) *Exposure atmosphere.* (i) The exposure atmosphere shall be held as constant as is practicable and must be monitored continuously or intermittently, depending on the method of analysis, to ensure that exposure levels are at the target values or within stated limits during the exposure period. Sampling methodology will be determined based on the type of generation system and the type of exposure chamber system specified for the exposure study.

(A) Integrated samples of test atmosphere aerosol shall be taken daily during the exposure period from a single representative sample port in the chamber near the breathing zone of the animals. Gas samples shall be taken daily to determine concentrations (ppm) of the major vapor components of the test atmosphere including CO, CO_2, NO_X, SO_2, and total hydrocarbons.

(B) To ensure that animals in different locations of the chamber receive a similar exposure atmosphere, distribution of an aerosol or vapor concentration in exposure chambers can be determined without animals during the developmental phase of the study, or it can be determined with animals early in the study. For head/nose-only exposure chambers, it may not be possible to monitor the chamber distribution during the exposure, because the exposure port contains the animal.

(C) During the development of the emissions generation system, particle size analysis shall be performed to establish the stability of an aerosol concentration with respect to particle size. Over the course of the exposure, analysis shall be conducted as often as is necessary to determine the consistency of particle size distribution.

(D) *Chamber rise and fall times.* The rise time required for the exposure concentration to reach 90 percent of the stable concentration after the generator is turned on, and the fall time when the chamber concentration decreases to 10 percent of the stable concentration after the generation system is

stopped shall be determined in the developmental phase of the study. Time-integrated samples collected for calculating exposure concentrations shall be taken after the rise time. The daily exposure time is exclusive of the rise or the fall time.

(ii) Instrumentation used for a given study will be determined based on the type of generation system and the type of exposure chamber system specified for the exposure study.

(A) For exhaust studies, combustion gases shall be sampled by collecting exposure air in bags and then analyzing the collected air sample to determine major components of the combustion gas using gas analyzers. Exposure chambers can also be connected to gas analyzers directly by using sampling lines and switching valves. Samples can be taken more frequently using the latter method. Aerosol instruments, such as photometers, or time-integrated gravimetric determination may be used to determine the stability of any aerosol concentration in the chamber.

(B) For evaporative emission studies, concentration of fuel vapors can usually be determined by using a gas chromatograph (GC) and/or infrared (IR) spectrometry. Grab samples for intermittent sampling can be taken from the chamber by using bubble samplers with the appropriate solvent to collect the vapors, or by collecting a small volume of air in a syringe. Intermediate or continuous monitoring of the chamber concentration is also possible by connecting the chamber with a GC or IR detector.

(7) Monitoring chamber environmental conditions may be performed by a computer system or by exposure system operating personnel.

(i) The flow-metering device used for the exposure chambers must be a continuous monitoring device, and actual flow measurements must be recorded at least every 30 minutes. Accuracy must be ±5 percent of full scale range. Measurement of air flow through the exposure chamber may be accomplished using any device that has sufficient range to accurately measure the air flow for the given chamber. Types of flow metering devices include rotameters, orifice meters, venturi meters, critical orifices, and turbinemeters (see Benedict, 1984 in paragraph (f)(4) and Spitzer, 1984 in paragraph (f)(17) of this section).

(ii) *Pressure.* Pressure measurement may be accomplished using manometers, electronic pressure transducers, magnehelics, or similar devices (see Gillum, 1982 in paragraph (f)(10) of this section). Accuracy of the pressure device must be ±5 percent of full scale range. Pressure measurements must be continuous and recorded at least every 30 minutes.

(iii) *Temperature.* The temperature of exposure chambers must be monitored continuously and recorded at least every 30 minutes. Temperature may be measured using thermometers, RTD's, thermocouples, thermistors, or other devices (see Benedict, 1984 in paragraph (f)(4) of this section). It is necessary to incorporate an alarm system into the temperature monitoring system. The exposure operators must be notified by the alarm system when the chamber temperature exceeds 26.7 °C (80 °F). The exposure must be discontinued and emergency procedures enacted to immediately reduce temperatures or remove test animals from high temperature environment when chamber temperatures exceed 29 °C. Accuracy of the temperature monitoring device will be ±1 °C for the temperature range of 20–30 °C.

(iv) *Relative humidity.* The relative humidity of exposure chambers must be monitored continuously and recorded at least every 30 minutes. Relative humidity may be measured using various devices (see Chaddock, 1985 in paragraph (f)(6) of this section).

(v) Lighting shall be measured quarterly, or once at the beginning, middle, and end of the study for shorter studies.

(vi) Noise level in the exposure chamber(s) shall be measured quarterly, or once at the beginning, middle, and end of the study for shorter studies.

(vii) Oxygen content is critical, especially in nose-only chamber systems, and shall be greater than or equal to 19 percent in the test cages. An oxygen sensor shall be located at a single position in the test chamber and a lower alarm limit of 18 percent shall be used to activate an alarm system.

(8) *Safety procedures and requirements.* In the case of potentially explosive test substance concentrations, care shall be taken to avoid generating explosive atmospheres.

(i) It is mandatory that the upper explosive limit (UEL) and lower explosive limit (LEL) for the fuel and/or fuel additive(s) that are being tested be determined. These limits can be found in the material safety data sheets (MSDS) for each substance and in various reference texts. The air concentration of the fuel or additive-base fuel mixture in the generation system, dilution/delivery system, and the exposure chamber system shall be calculated to ensure that explosive limits are not present.

(ii) Storage, handling, and use of fuels or fuel/additive mixtures shall follow guidelines given in 29 CFR 1910.106.

(iii) Monitoring for carbon monoxide (CO) levels is mandatory for combustion systems. CO shall be continuously monitored in the immediate area of the engine/vehicle system and in the exposure chamber(s).

(iv) Air samples shall be taken quarterly in the immediate area of the vapor generation system and the exposure chamber system, or once at the beginning, middle, and end of the study for shorter studies. These samples shall be analyzed by methods described in paragraph (d)(6)(ii)(B) of this section.

(v) With the presence of fuels and/or fuel additives, all electrical and electronic equipment must be grounded. Also, the dilution/delivery system and chamber exposure system must be grounded. Guidelines for grounding are given in 29 CFR 1910.304.

(9) *Quality control and quality assurance procedures*—(i) *Standard operating procedures (SOPs).* SOPs for exposure operations, sampling instruments, animal handling, and analytical methods shall be written during the developmental phase of the study.

(ii) Technicians/operators shall be trained in exposure operation, maintenance, and documentation, as appropriate, and their training shall be documented.

(iii) Flow meters, sampling instruments, and balances used in the inhalation experiments shall be calibrated with standards during the developmental phase to determine their sensitivity, detection limits, and linearity. During the exposure period, instruments shall be checked for calibration and documented to ensure that each instrument still functions properly.

(iv) The mean exposure concentration shall be within 10 percent of the target concentration on 90 percent or more of exposure days. The coefficient of variation shall be within 25 percent of target on 90 percent or more of exposure days. For example, a manufacturer might determine a mean exposure concentration of its product's exposure emissions by identifying ''marker'' compound(s) typical of the emissions of the fuel or fuel/additive mixture under study as a surrogate for the total of individual compounds in those exposure emissions. The manufacturer would note any concentration changes in the level of the ''marker'' compound(s) in the sample's daily emissions for biological testing.

(v) The spatial variation of the chamber concentration shall be 10 percent, or less. If a higher spatial variation is observed during the developmental phase, then air mixing in the chamber shall be increased. In any case, animals shall be rotated among the various cages in the exposure chamber(s) to insure each animal's uniform exposure during the study.

(e) *Data and reporting.* Data shall be summarized in tabular form, showing for each group the number of animals at the start of the test, the number of animals showing lesions, the types of lesions, and the percentage of animals displaying each type of lesion.

(1) *Treatment of results.* All observed results, quantitative and incidental, shall be evaluated by an appropriate statistical method. Any generally accepted statistical method may be used; the statistical methods shall be selected during the design of the study.

(2) *Evaluation of results.* The findings of an inhalation toxicity study should be evaluated in conjunction with the findings of preceding studies and considered in terms of the observed toxic effects and the necropsy and histopathological findings. The evaluation will include the relationship between the concentration of the test atmosphere and the duration of exposure,

and the severity of abnormalities, gross lesions, identified target organs, body weight changes, effects on mortality and any other general or specific toxic effects.

(3) *Test conditions.* (i) The exposure apparatus shall be described, including:

(A) The vehicle/engine design and type, the dynamometer, the cooling system, if any, the computer control system, and the dilution system for exhaust emission generation;

(B) The evaporative emissions generator model, type, or design and its dilution system; and

(C) Other test conditions, such as the source and quality of mixing air, fuel or fuel/additive mixture used, treatment of exhaust air, design of exposure chamber and the method of housing animals in a test chamber shall be described.

(ii) The equipment for measuring temperature, humidity, particulate aerosol concentrations and size distribution, gas analyzers, fuel vapor concentrations, chamber distribution, and rise and fall time shall be described.

(iii) *Daily exposure results.* The daily record shall document the date, the start and stop times of the exposure, number of samples taken during the day, daily concentrations determined, calibration of instruments, and problems encountered during the exposure. The daily exposure data shall be signed by the exposure operator and reviewed and signed by the exposure supervisor responsible for the study.

(4) Exposure data shall be tabulated and presented with mean values and a measure of variability (*e.g.*, standard deviation), and shall include:

(i) Airflow rates through the inhalation equipment;

(ii) Temperature and humidity of air;

(iii) Chamber concentrations in the chamber breathing zone;

(iv) Concentration of combustion exhaust gases in the chamber breathing zone;

(v) Particle size distribution (e.g., mass median aerodynamic diameter and geometric standard deviation from the mean);

(vi) Rise and fall time;

(vii) Chamber concentrations during the non-exposure period; and

(viii) Distribution of test substance in the chamber.

(5) *Animal data.* Tabulation of toxic response data by species, strain, sex and exposure level for:

(i) Number of animals exposed;

(ii) Number of animals showing signs of toxicity; and

(iii) Number of animals dying.

(f) *References.* For additional background information on this exposure guideline, the following references should be consulted.

(1) Barr, E.B. (1988) Operational Limits for Temperature and Percent Oxygen During HM Nose-Only Exposures—Emergency Procedures [interoffice memorandum]. Albuquerque, NM: Lovelace Inhalation Toxicology Research Institute; May 13.

(2) Barr, E.B.; Cheng, Y.S.; Mauderly, J.L. (1990) Determination of Oxygen Depletion in a Nose-Only Exposure Chamber. Presented at: 1990 American Association for Aerosol Research; June; Philadelphia, PA: American Association for Aerosol Research; abstract no. P2e1.

(3) Barrow, C.S. (1989) Generation and Characterization of Gases and Vapors. In: McClellan, R.O., Henderson, R.F. ed. Concepts in Inhalation Toxicology. New York, NY: Hemisphere Publishing Corp., 63–84.

(4) Benedict, R.P. (1984) Fundamentals of Temperature, Pressure, and Flow Measurements. 3rd ed. New York, NY: John Wiley and Sons.

(5) Cannon, W.C.; Blanton, E.F.; McDonald, K.E. The Flow-Past Chamber. (1983) An Improved Nose-Only Exposure System for Rodents. Am. Ind. Hyg. Assoc. J. 44: 923–928.

(6) Chaddock, J.B. ed. (1985) Moisture and humidity. Measurement and Control in Science and Industry: Proceedings of the 1985 International Symposium on Moisture and Humidity; April 1985; Washington, D.C. Research Triangle Park, NC: Instrument Society of America.

(7) Cheng, Y.S.; Barr, E.B.; Carpenter, R.L.; Benson, J.M.; Hobbs, C.H. (1989) Improvement of Aerosol Distribution in Whole-Body Inhalation Exposure Chambers. Inhal. Toxicol. 1: 153–166.

(8) Cheng,Y.S.; Moss, O.R. (1989) Inhalation Exposure Systems. In: McClellan, R.O.; Henderson, R.F. ed. Concepts in Inhalation Toxicology. New York, NY: Hemisphere Publishing Corp., 19–62.

(9) Cheng, Y.S.; Yeh, H.C.; Mauderly, J.L.; Mokler, B.V. (1984) Characterization of Diesel Exhaust in a Chronic Inhalation Study. Am. Ind. Hyg. Assoc. J. 45: 547–555.

(10) Gillum, D.R. (1982) Industrial Pressure Measurement. Research Triangle Park, NC: Instrument Society of America.

(11) Hinners, R.G.; Burkart, J.K.; Malanchuk, M. (1979) Animal Exposure Facility for Diesel Exhaust Studies.

(12) Kittelson, D.B.; Dolan, D.F. (1979) Diesel exhaust aerosols. In Willeke, K. ed. Generation of Aerosols and Facilities for Exposure Experiments. Ann Arbor, MI: Ann Arbor Science Publishers Inc., 337–360.

(13) Mokler, B.V.; Archibeque, F.A.; Beethe, R.L.; Kelly, C.P.J.; Lopez, J.A.; Mauderly, J.L.; Stafford, D.L. (1984) Diesel Exhaust Exposure System for Animal Studies. Fundamental and Applied Toxicology 4: 270–277.

(14) Moore, W.; *et al.* (1978) Preliminary finding on the Deposition and Retention of Automotive Diesel Particulate in Rat Lungs. Proc. of Annual Meeting of the Air Pollution Control Assn, 3, paper 78–33.7.

(15) Raabe, O.G., Bennick, J.E., Light, M.E., Hobbs, C.H., Thomas, R.L., Tillery, M.I. (1973) An Improved Apparatus for Acute Inhalation Exposure of Rodents to Radioactive Aerosols. Toxicol & Applied Pharmaco.; 1973; 26: 264–273.

(16) Rao, G.N. (1986) Significance of Environmental Factors on the Test System. In: Hoover, B.K.; Baldwin, J.K.; Uelner, A.F.; Whitmire, C.E.; Davies, C.L.; Bristol, D.W. ed. Managing conduct and data quality of toxicology studies. Raleigh, NC: Princeton Scientific Publishing Co., Inc.: 173–185.

(17) Spitzer, D.W. (1984) Industrial Flow Measurement. Research Triangle Park, NC: Instrument Society of America.

(18) 40 CFR part 798, Health effects testing guidelines.

(19) 29 CFR part 1910, Occupational safety and health standards for general industry.

(20) FEDERAL REGISTER, 42 FR 26748, May 25, 1977.

[59 FR 33093, June 27, 1994, as amended at 61 FR 58746, Nov. 18, 1996; 61 FR 36512, July 11, 1996]

§79.62 Subchronic toxicity study with specific health effect assessments.

(a) *Purpose*—(1) *General toxicity*. This subchronic inhalation study is designed to determine a concentration-response relationship for potential toxic effects in rats resulting from continuous or repeated inhalation exposure to vehicle/engine emissions over a period of 90 days. A subgroup of perfusion-fixed animals is required, in addition to the main study population, for more exacting organ and tissue histology. This test will provide screening information on target organ toxicities and on concentration levels useful for running chronic studies and establishing exposure criteria. Initial information on effective concentrations/exposures of the test atmosphere may be determined from the literature of previous studies or through concentration range-finding trials prior to starting this study. This health effects screening test is not capable of directly determining those effects which have a long latency period for development (e.g., carcinogenicity and life-shortening), though it may permit the detremination of a no-observed-adverse-effect level, or NOAEL.

(2) *Specific health effects assessments (HEAs)*. These supplemental studies are designed to determine the potential for reproductive/teratologic, carcinogenic, mutagenic, and neurotoxic health effect outcomes from vehicle/engine emission exposures. They are done in combination with the subchronic toxicity study and paragraph (c) of this section or may be done separately as outlined by the appropriate test guideline.

(i) *Fertility assessment/teratology*. The fertility assessment is an *in vivo* study designed to provide information on potential health hazards to the fetus arising from the mother's repeated exposure to vehicle/engine emissions before and during her pregnancy. By including a mating of test animals, the study provides preliminary data on the effects of repeated vehicle/engine emissions exposure on gonadal function, conception, and fertility. The fertility assessment/teratology guideline is found in §79.63.

(ii) *Micronucleus (MN) Assay*. The MN assay is an *in vivo* cytogenetic test which gives information on potential carcinogenic and/or mutagenic effects of exposure to vehicle/engine emissions. The MN assay detects damage to the chromosomes or mitotic apparatus of cells in the tissues of a test subject exposed repeatedly to vehicle/engine emissions. The assay is based on an increase in the frequency of micronucleated erythrocytes found in bone marrow from treated animals compared to that of control animals. The guideline for the MN assay is found in §79.64.

(iii) *Sister Chromatid Exchange (SCE) Assay*. The SCE assay is an *in vivo* analysis which gives information on potential mutagenic and/or carcinogenic effects of exposure to vehicle/engine

emissions. The assay detects the ability of a chemical to enhance the exchange of DNA between two sister chromatids of a duplicating chromosome. This assay uses peripheral blood lymphocytes isolated from an exposed rodent test species and grown to confluence in cell culture. The guideline for the SCE assay is found in § 79.65.

(iv) *Neurotoxicity (NTX) measures.* NTX measures include (A) histopathology of specified central and peripheral nervous system tissues taken from emission-exposed rodents, and (B) an assay of brain tissue levels of glial fibrillary acidic protein (GFAP), a major filament protein of astrocytes, from emission-exposed rodents. The guidelines for the neurohistopathology and GFAP studies are found in § 79.66 and § 79.67, respectively.

(b) *Definitions.* For the purposes of this section, the following definitions apply:

No-observed-adverse-effect-level (NOAEL) means the maximum concentration used in a test which produces no observed adverse effects. A NOAEL is expressed in terms of weight or volume of test substance given daily per unit volume of air (µg/L or ppm).

Subchronic inhalation toxicity means the adverse effects occurring as a result of the continuous or repeated daily exposure of experimental animals to a chemical by inhalation for part (approximately 10 percent) of a life span.

(c) *Principle of the test method.* As long as none of the requirements of any study are violated by the combination, one or more HEAs may be combined with the general toxicity study through concurrent exposures of their study populations and/or by sharing the analysis of the same animal subjects. Requirements duplicated in combined studies need not be repeated. Guidelines for combining HEAs with the general toxicity study are as follows.

(1) *Fertility assessment.* (i) The number of study animals in the test population is increased when the fertility assessment is run concurrently with the 90-day toxicity study. A minimum of 40 females per test group shall undergo vaginal lavage daily for two weeks before the start of the exposure period. The resulting wet smears are examined to cull those animals which are acyclic. Twenty-five females shall be randomly assigned to a for-breeding group with the balance of females assigned to a group for histopathologic examination.

(ii) All test groups are exposed over a period of 90 days to various concentrations of the test atmosphere for a minimum of six hours per day. After seven weeks of exposures, analysis of vaginal cell smears shall resume on a daily basis for the 25 for-breeding females and shall continue for a period of four weeks or until each female in the group is confirmed pregnant. Following the ninth week of exposures, each for-breeding female is housed overnight with a single study male. Matings shall continue for as long as two weeks, or until pregnancy is confirmed (pregnancy day 0). Pregnant females are only exposed through day 15 of their pregnancy while daily exposures continue throughout the course of the study for non-pregnant females and study males.

(iii) On pregnancy day 20, pregnant females are sacrificed and their uteri are examined. Pregnancy status and fetal effects are recorded as described in § 79.63. At the end of the exposure period, all males and non-pregnant females are sacrificed and necropsied. Testes and epididymal tissue samples are taken from five perfusion-fixed test subjects and histopathological examinations are carried out on the remainder of the non-pregnant females and study males.

(2) *Carcinogenicity/mutagenicity* (C/M) assessment. When combined with the subchronic toxicity study, the main study population is used to perform both the *in vivo* MN and SCE assays. Because of the constant turnover of the cells to be analyzed in these assays, a separate study population may be used for this assessment. A study population needs only to be exposed a minimum of four weeks. At exposure's end, ten animals per exposure and control groups are anaesthetized and heart punctures are performed on all members. After separating blood components, individual lymphocyte cell cultures are set up for SCE analysis. One

femur from each study subject is also removed and the marrow extracted. The marrow is smeared onto a glass slide, and stained for analysis of micronuclei in erythrocytes.

(3) *Neurotoxicity (NTX) measures.* (i) When combined with this subchronic toxicity study, test animals designated for whole-body perfusion fixation/lung histology and exposed as part of the main animal population are used to perform the neurohistology portion of these measures. After the last exposure period, a minimum of ten animals from each exposure group shall be preserved *in situ* with fixative. Sections of brain, spinal cord, and proximal sciatic or tibial nerve are then cut, processed further in formalin, and mounted for viewing under a light microscope. Fibers from the sciatic or tibial nerve sample are teased apart for further analysis under the microscope.

(ii) *GFAP assay.* After the last exposure period, a minimum of ten rodents from each exposure group shall be sacrificed, and their brains excised and divided into regions. The tissue samples are then applied to filter paper, washed with anti-GFAP antibody, and visualized with a radio-labelled Protein A. The filters are quantified for degree of immunoreactivity between the antibody and GFAP in the tissue samples. A non-radioactive ELISA format is also referenced in the GFAP guideline cited in paragraph (a)(2)(iv) of this section. Note: Because the GFAP assay requires fresh, *i.e.,* non-preserved, brain tissue, the number of test animals may need to be increased to provide an adequate number of test subjects to complete the histopathology requirements of both the GFAP and the general toxicity portion of the 90-day inhalation study.

(iii) The start of the exposure period for the NTX measures study population may be staggered from that of the main study group to more evenly distribute the analytical work required in both study populations. The exposures would remain the same in all other respects.

(d) *Test procedures*—(1) *Animal selection*—(i) *Species and sex.* The rat is the recommended species. If another rodent species is used, the tester shall provide justification for its selection. Both sexes shall be used in any assessment unless it is demonstrated that one sex is refractory to the effects of exposure.

(ii) *Age and number.* Rats shall be at least ten weeks of age at the beginning of the study exposure. The number of animals necessary for individual health effect outcomes is as follows:

(A) Thirty rodents per concentration level/group, fifteen of each sex, shall be used to satisfy the reporting requirements of the 90-day toxicity study. Ten animals per concentration level/group shall be designated for whole body perfusion with fixative (by gravity) for lung studies, and neurohistology and testes studies, as appropriate.

(B) Forty rodents, 25 females and ten males shall be added for each test concentration or control group when combining a 90-day toxicity study with a fertility assessment.

(C) The tester shall provide a group of 10 animals (five animals per sex per experimental/control groups) in addition to the main test population when performing the GFAP neurotoxicity HEA.

(2) *Recovery group.* The manufacturer shall include an group of 20 animals (10 animals per sex) in the test population, exposing them to the highest concentration level for the entire length of the study's exposure period. This group shall then be observed for reversibility, persistence, or delayed occurrence of toxic effects during a post-exposure period of not less than 28 days.

(3) *Inhalation exposure.* (i) All data developed within this study shall be in accordance with good laboratory practice provisions under § 79.60.

(ii) The general conduct of this study shall be in accordance with the vehicle emissions inhalation exposure guideline in § 79.61.

(4) *Observation of animals.* (i) All toxicological (e.g., weight loss) and neurological signs (e.g., motor disturbance) shall be recorded frequently enough to observe any abnormality, and not less than weekly for all study animals. Animals shall be weighed weekly.

(ii) The following is a minimal list of measures that shall be noted:

(A) Body weight;

(B) Subject's reactivity to general stimuli such as removal from the cage or handling;

(C) Description, incidence, and severity of any convulsions, tremors, or abnormal motor movements in the home cage;

(D) Descriptions and incidence of posture and gait abnormalities observed in the home cage;

(E) Description and incidence of any unusual or abnormal behaviors, excessive or repetitive actions (stereotypies), emaciation, dehydration, hypotonia or hypertonia, altered fur appearance, red or crusty deposits around the eyes, nose, or mouth, and any other observations that may facilitate interpretation of the data.

(iii) Any animal which dies during the test is necropsied as soon as possible after discovery.

(5) *Clinical examinations.* (i) The following examinations shall be performed on the twenty animals designated as the 90-day study population, exclusive of pregnant dams and those study animals targeted for perfusion by gravity:

(A) The following hematology determinations shall be carried out at least two times during the test period (after 30 days of exposure and just prior to terminal sacrifice at the end of the exposure period): hematocrit, hemoglobin concentration, erythrocyte count, total and differential leukocyte count, and a measure of clotting potential such as prothrombin time, thromboplastin time, or platelet count.

(B) Clinical biochemistry determinations on blood shall be carried out at least two times during the test period, after 30 days of exposure and just prior to terminal sacrifice at the end of the exposure period, on all groups of animals including concurrent controls. Clinical biochemical testing shall include assessment of electrolyte balance, carbohydrate metabolism, and liver and kidney function. The selection of specific tests will be influenced by observations on the mode of action of the substance. In the absence of more specific tests, the following determinations may be made: calcium, phosphorus, chloride, sodium, potassium, fasting glucose (with period of fasting appropriate to the species), serum alanine aminotransferase, serum aspartate aminotransferase, sorbitol dehydrogenase, gamma glutamyl transpeptidase, urea nitrogen, albumen, blood creatinine, methemoglobin, bile acids, total bilirubin, and total serum protein measurements. Additional clinical biochemistry shall be employed, where necessary, to extend the investigation of observed effects, e.g., analyses of lipids, hormones, acid/base balance, and cholinesterase activity.

(ii) The following examinations shall initially be performed on the high concentration and control groups only:

(A) Ophthalmological examination, using an ophthalmoscope or equivalent suitable equipment, shall be made prior to exposure to the test substance and at the termination of the study. If changes in the eyes are detected, all animals shall be examined.

(B) Urinalysis is not required on a routine basis, but shall be done when there is an indication based on expected and/or observed toxicity.

(iii) Preservation by whole-body perfusion of fixative into the anaesthetized animal for lung histology of ten animals from the 90-day study population for each experimental and control group.

(6) *Gross pathology.* With the exception of the whole body perfusion-fixed test animals cited in paragraph (d)(1)(ii)(A) of this section, all rodents shall be subjected to a full gross necropsy which includes examination of the external surface of the body, all orifices and the cranial, thoracic, and abdominal cavities and their contents. Gross pathology shall be performed on the following organs and tissues:

(i) The liver, kidneys, lungs, adrenals, brain, and gonads, including uterus, ovaries, testes, epididymides, seminal vesicles (with coagulating glands), and prostate, constitute the group of target organs for histology and shall be weighed as soon as possible after dissection to avoid drying. In addition, for other than rodent test species, the thyroid with parathyroids, when present, shall also be weighed as soon as possible after dissection to avoid drying.

(ii) The following organs and tissues, or representative samples thereof, shall

be preserved in a suitable medium for possible future histopathological examination: All gross lesions; lungs—which shall be removed intact, weighed, and treated with a suitable fixative to ensure that lung structure is maintained (perfusion with the fixative is considered to be an effective procedure); nasopharyngeal tissues; brain—including sections of medulla/pons, cerebellar cortex, and cerebral cortex; pituitary; thyroid/parathyroid; thymus; trachea; heart; sternum with bone marrow; salivary glands; liver; spleen; kidneys; adrenals; pancreas; reproductive organs: uterus; cervix; ovaries; vagina; testes; epididymides; prostate; and, if present, seminal vesicles; aorta; (skin); gall bladder (if present); esophagus; stomach; duodenum; jejunum; ileum; cecum; colon; rectum; urinary bladder; representative lymph node; (mammary gland); (thigh musculature); peripheral nerve/tissue; (eyes); (femur—including articular surface); (spinal cord at three levels—cervical, midthoracic, and lumbar); and (zymbal and exorbital lachrymal glands).

(7) *Histopathology*. Histopathology shall be performed on the following organs and tissues from all rodents:

(i) All gross lesions.

(ii) Respiratory tract and other organs and tissues, listed in paragraph (d)(6)(ii) of this section (except organs/tissues in parentheses), of all animals in the control and high dose groups.

(iii) The tissues mentioned in parentheses, listed in paragraph (d)(6)(ii) of this section, if indicated by signs of toxicity or target organ involvement.

(iv) Lungs of animals in the low and intermediate dose groups shall also be subjected to histopathological examination, primarily for evidence of infection since this provides a convenient assessment of the state of health of the animals.

(v) Lungs and trachea of the whole-body perfusion-fixed test animals cited in paragraph (d)(1)(ii)(A) of this section are examined for inhaled particle distribution.

(e) Interpretation of results. All observed results, quantitative and incidental, shall be evaluated by an appropriate statistical method. The specific methods, including consideration of statistical power, shall be selected during the design of the study.

(f) *Test report*. In addition to the reporting requirements as specified under §§79.60 and 79.61(e), the following individual animal data information shall be reported:

(1) Date of death during the study or whether animals survived to termination.

(2) Date of observation of each abnormal sign and its subsequent course.

(3) Individual body weight data, and group average body weight data vs. time.

(4) Feed consumption data, when collected.

(5) Hematological tests employed and all results.

(6) Clinical biochemistry tests employed and all results.

(7) Necropsy findings.

(8) Type of stain/fixative and procedures used in preparing tissue samples.

(9) Detailed description of all histopathological findings.

(10) Statistical treatment of the study results, where appropriate.

(g) *References*. For additional background information on this test guideline, the following references should be consulted.

(1) 40 CFR 798.2450, Inhalation toxicity.

(2) 40 CFR 798.2675, Oral Toxicity with Satellite Reproduction and Fertility Study.

(3) General Statement of Work for the Conduct of Toxicity and Carcinogenicity Studies in Laboratory Animals (revised April, 1987/modifications through January, 1990) appendix G, National Toxicology Program—U.S. Dept. of Health and Human Services (Public Health Service), P.O. Box 12233, Research Triangle Park, NC 27709.

§79.63 Fertility assessment/teratology.

(a) *Purpose*. Fertility assessment/teratology is an *in vivo* study designed to provide information on potential health hazards to the fetus arising from the mother's repeated inhalation exposure to vehicle/engine emissions before and during her pregnancy. By including a mating of test animals, the study provides preliminary data on the effects of repeated vehicle/engine emissions exposure on gonadal function,

conception, and fertility. Since this is a one-generation test that ends with examination of full-term fetuses, but not of live pups, it is not capable of determining effects on reproductive development which would only be detected in viable offspring of treated parents.

(b) *Definitions.* For the purposes of this section, the following definitions apply:

Developmental toxicity means the ability of an agent to induce *in utero* death, structural or functional abnormalities, or growth retardation after contact with the pregnant animal.

Estrous cycle means the periodic recurrence of the biological phases of the female reproductive system which prepare the animal for conception and the development of offspring. The phases of the estrous cycle for a particular animal can be characterized by the general condition of the cells present in the vagina and the presence or absence of various cell types.

Vaginal cytology evaluation means the use of wet vaginal cell smears to determine the phase of a test animal's estrous cycle and the potential for adverse exposure effects on the regularity of the animal's cycle. In the rat, common cell types found in the smears correlate well with the various stages of the estrous cycle and to changes occurring in the reproductive tract.

(c) *Principle of the test method.* (1) For a two week period before exposures start, daily vaginal cell smears are examined from a surplus of female test animals to identify and cull those females which are acyclic. After culling, testers shall randomly assign at each exposure concentration (including unexposed) a minimum of twenty-five females for breeding and fifteen non-bred females for later histologic evaluation. Test animals shall be exposed by inhalation to graduated concentrations of the test atmosphere for a minimum of six hours per day over the next 13 weeks. Males and females in both test and control groups are mated after nine weeks of exposure. Exposures for pregnant females continue through gestation day 15, while exposures for males and all non- pregnant females shall continue for the full exposure period.

(2) Beginning two weeks before the start of the mating period, daily vaginal smears resume for all to-be-bred females to characterize their estrous cycles. This will continue for four weeks or until a rat's pregnancy is confirmed, *i.e.*, day 0, by the presence of sperm in the cell smear. On pregnancy day 20, shortly before the expected date of delivery, each pregnant female is sacrificed, her uterus removed, and the contents examined for embryonic or fetal deaths, and live fetuses. At the end of the exposure period, males and all non-pregnant females shall be weighed, and various organs and tissues, as appropriate, shall be removed and weighed, fixed with stain, and sectioned for viewing under a light microscope.

(3) This assay may be done separately or in combination with the subchronic toxicity study, pursuant to the provisions in § 79.62.

(d) *Limit test.* If a test at one dose level of the highest concentration that can be achieved while maintaining a particle size distribution with a mass median aerodynamic diameter (MMAD) of 4 micrometers (μm) or less, using the procedures described in section 79.60 of this part produces no observable toxic effects and if toxicity would not be expected based upon data of structurally related compounds, then a full study using three dose levels might not be necessary. Expected human exposure though may indicate the need for a higher dose level.

(e) *Test procedures*—(1) *Animal selection*—(i) *Species and strain.* The rat is the preferred species. Strains with low fecundity shall not be used and the candidate species shall be characterized for its sensitivity to developmental toxins. If another rodent species is used, the tester shall provide justification for its selection.

(ii) Animals shall be a minimum of 10 weeks old at the start of the exposure period.

(iii) *Number and sex.* Each test and control group shall have a minimum of 25 males and 40 females. In order to ensure that sufficient pups are produced to permit meaningful evaluation of the potential developmental toxicity of the test substance, twenty pregnant test

animals are required for each exposure and control level.

(2) *Observation period.* The observation period shall be 13 weeks, at a minimum.

(3) *Concentration levels and concentration selection.* (i) To select the appropriate concentration levels, a pilot or trial study may be advisable. Since pregnant animals have an increased minute ventilation as compared to non-pregnant animals, it is recommended that the trial study be conducted in pregnant animals. Similarly, since presumably the minute ventilation will vary with progression of pregnancy, the animals should be exposed during the same period of gestation as in the main study. It is not always necessary, though, to carry out a trial study in pregnant animals. Comparisons between the results of a trial study in non-pregnant animals, and the main study in pregnant animals will demonstrate whether or not the test substance is more toxic in pregnant animals. In the trial study, the concentration producing embryonic or fetal lethalities or maternal toxicity should be determined.

(ii) The highest concentration level shall induce some overt maternal toxicity such as reduced body weight or body weight gain, but not more than 10 percent maternal deaths.

(iii) The lowest concentration level shall not produce any grossly observable evidence of either maternal or developmental toxicity.

(4) *Inhalation exposure.* (i) All data developed within this study shall be in accordance with good laboratory practice provisions under § 79.60.

(ii) The general conduct of this study shall be in accordance with the vehicle emissions inhalation exposure guideline in § 79.61.

(iii) Pregnant females shall be exposed to the test atmosphere on each and every day between (and including) the first and fifteenth day of gestation.

(f) *Test performance*—(1) *Study conduct.* Directions specific to this study are:

(i) The duration of exposure shall be at least six hours daily, allowing appropriate additional time for chamber equilibrium.

(ii) Where an exposure chamber is used, its design shall minimize crowding of the test animals. This is best accomplished by individual caging.

(iii) Pregnant animals shall not be subjected to beyond the minimum amount of stress. Since whole-body exposure appears to be the least stressful mode of exposure, it is the preferred method. In general oronasal or head-only exposure, which is sometimes used to avoid concurrent exposure by the dermal or oral routes, is not recommended because of the associated stress accompanying the restraining of the animals. However, there may be specific instances where it may be more appropriate than whole-body exposure. The tester shall provide justification/reasoning for its selection.

(iv) Measurements shall be made at least every other day of food consumption for all animals in the study. Males and females shall be weighed on the first day of exposure and 2–3 times per week thereafter, except for pregnant dams.

(v) The test animal housing, mating, and exposure chambers shall be operated on a twenty-four hour lighting schedule, with twelve hours of light and twelve hours of darkness. Test animal exposure shall only occur during the light portion of the cycle.

(vi) Signs of toxicity shall be recorded as they are observed including the time of onset, degree, and duration.

(vii) Females showing signs of abortion or premature delivery shall be sacrificed and subjected to a thorough macroscopic examination.

(viii) Animals that die or are euthanized because of morbidity will be necropsied promptly.

(2) *Vaginal cytology.* (i) For a two week period before the mating period starts, each female in the to-be-bred population shall undergo a daily saline vaginal lavage. Two wet cell smears from this lavage shall be examined daily for each subject to determine a baseline pattern of estrus. Testers shall avoid excessive handling and roughness in obtaining the vaginal cell samples, as this may induce a condition of pseudo-pregnancy in the test animals.

(ii) This will continue for four weeks or until day 0 of a rat's pregnancy is

confirmed by the presence of sperm in the cell smear.

(3) *Mating and fertility assessment.* (i) Beginning nine weeks after the start of exposure, each exposed and control group female (exclusive of the histology group females) shall be paired during non-exposure hours with a male from the same exposure concentration group. Matings shall continue for a period of two weeks, or until all mated females are determined to be pregnant. Mating pairs shall be clearly identified.

(ii) Each morning, including weekends, cages shall be examined for the presence of a sperm plug. When found, this shall mark gestation day 0 and pregnancy shall be confirmed by the presence of sperm in the day's wet vaginal cell smears.

(iii) Two weeks after mating is begun, or as females are determined to be pregnant, bred animals are returned to pre-mating housing. Daily exposures continues through gestation day 15 for all pregnant females or through the balance of the exposure period for non-pregnant females and all males.

(iv) Those pairs which fail to mate shall be evaluated in the course of the study to determine the cause of the apparent infertility. This may involve such procedures as additional opportunities to mate with a proven fertile partner, histological examination of the reproductive organs, and, in males, examination of the spermatogenic cycles. The stage of estrus for each non-pregnant female in the breeding group will be determined at the end of the exposure period.

(4) All animals in the histology group shall be subject to histopathologic examination at the end of the study's exposure period.

(g) *Treatment of results.* (1) All observed results, quantitative and incidental, shall be evaluated by an appropriate statistical method. The specific methods, including consideration of statistical power, shall be selected during the design of the study.

(2) Data and reporting. In addition to the reporting requirements specified under §§ 79.60 and 79.61, the final test report must include the following information:

(i) *Gross necropsy.* (A) All animals shall be subjected to a full necropsy which includes examination of the external surface of the body, all orifices, and the cranial, thoracic, and abdominal cavities and their contents. Special attention shall be directed to the organs of the reproductive system.

(B) The liver, kidneys, adrenals, pituitary, uterus, vagina, ovaries, testes, epididymides and seminal vesicles (with coagulating glands), and prostate shall be weighed wet, as soon as possible after dissection, to avoid drying.

(*i*) At the time of sacrifice on gestation day 20 or at death during the study, each dam shall be examined macroscopically for any structural abnormalities or pathological changes which may have influenced the pregnancy.

(*ii*) The contents of the uterus shall be examined for embryonic or fetal deaths and the number of viable fetuses. Gravid uterine weights need not be obtained from dead animals where decomposition has occurred. The degree of resorption shall be described in order to help estimate the relative time of death.

(*iii*) The number of corpora lutea shall be determined in each pregnant dam.

(*iv*) Each fetus shall be weighed, all weights recorded, and mean fetal weights determined.

(*v*) Each fetus shall be examined externally and the sex determined.

(*vi*) One-half of the rat fetuses in each litter shall be examined for skeletal anomalies, and the remaining half shall be examined for soft tissue anomalies, using appropriate methods.

(ii) *Histopathology.* (A) Histopathology on vagina, uterus, ovaries, testes, epididymides, seminal vesicles, and prostate as appropriate for all males and histology group females in the control and high concentration groups and for all animals that died or were euthanized during the study. If abnormalities or equivocal results are seen in any of these organs/tissues, the same organ/tissue from test animals in lower concentration groups shall be examined.

NOTE: Testes, seminal vesicles, epididymides, and ovaries, at a minimum, shall be examined in perfusion-fixed (pressure or gravity method) test subjects, when available.

(B) All gross lesions in all study animals shall be examined.

(C) As noted under mating procedures, reproductive organs of animals suspected of infertility shall be subject to microscopic examination.

(D) The following organs and tissues, or representative samples thereof, shall be preserved in a suitable medium for future histopathological examination: all gross lesions; vagina; uterus; ovaries; testes; epididymides; seminal vesicles; prostate; liver; and kidneys/adrenals.

(3) *Evaluation of results.* (i) The findings of a developmental toxicity study shall be evaluated in terms of the observed effects and the exposure levels producing effects. It is necessary to consider the historical developmental toxicity data on the species/strain tested.

(ii) There are several criteria for determining a positive result for reproductive/teratologic effects; a statistically significant dose-related decrease in the weight of the testes for treated subjects over control subjects, a decrease in neonatal viability, a significant change in the presence of soft tissue or skeletal abnormalities, or an increased rate of embryonic or fetal resorption or death. Other criteria, e.g., lengthening of the estrous cycle or the time spent in any one stage of estrus, changes in the proportion of viable male vs female fetuses or offspring, the number and type of cells in vaginal smears, or pathologic changes found during gross or microscopic examination of male or female reproductive organs may be based upon detection of a reproducible and statistically significant positive response for that evaluation parameter. A positive result indicates that, under the test conditions, the test substance does induce reproductive organ or fetal toxicity in the test species.

(iii) A test substance which does not produce either a statistically significant dose-related change in the reproductive organs or cycle or a statistically significant and reproducible positive response at any one of the test points may not induce reproductive organ toxicity in this test species, but further investigation , e.g., to establish absorption and bioavailability of the test substance, should be considered.

(h) *Test report.* In addition to the reporting requirements as specified under 40 CFR 79.60 and the vehicle emissions inhalation toxicity guideline as published in 40 CFR 79.61, the following specific information shall be reported:

(1) *Individual animal data.* (i) Time of death during the study or whether animals survived to termination.

(ii) Date of onset and duration of each abnormal sign and its subsequent course.

(iii) Feed and body weight data.

(iv) Necropsy findings.

(v) Male test subjects.

(A) Testicle weight, and body weight: testicle weight ratio.

(B) Detailed description of all histopathological findings, especially for the testes and the epididymides.

(vi) Female test subjects.

(A) Uterine weight data.

(B) Beginning and ending collection dates for vaginal cell smears.

(C) Estrous cycle length compared within and between groups including mean cycle length for groups.

(D) Percentage of time spent in each stage of cycle.

(E) Stage of estrus at time of mating/sacrifice and proportion of females in estrus between concentration groups.

(F) Detailed description of all histopathological findings, especially for uterine/ovary samples.

(vii) Pregnancy and litter data. Toxic response data by exposure level, including but not limited to, indices of fertility and time-to-mating, including the number of days until mating and the number of full or partial estrous cycles until mating.

(A) Number of pregnant animals,

(B) Number and percentage of live fetuses, resorptions.

(viii) *Fetal data.* (A) Numbers of each sex.

(B) Number of fetuses with any soft tissue or skeletal abnormalities.

(2) Type of stain/fixative and procedures used in preparing tissue samples.

(3) Statistical treatment of the study results.

(i) *References.* For additional background information on this test guideline, the following references should be consulted.

(1) 40 CFR 798.2675, Oral Toxicity with Satellite Reproduction and Fertility Study.

(2) 40 CFR 798.4350, Inhalation Developmental Toxicity Study.

(3) Chapin, R.E. and J.J. Heindel (1993) Methods in Toxicology, Vol. 3, Parts A and B: Reproductive Toxicology, Academic Press, Orlando, FL.

(4) Gray, L.E., et al. (1989) ''A Dose-Response Analysis of Methoxychlor-Induced Alterations of Reproductive Development and Function in the Rat'' Fund. App. Tox. 12, 92–108.

(5) Leblond, C.P. and Y. Clermont (1952) ''Definition of the Stages of the Cycle of the Seminiferous Epithelium of the Rat.'' Ann. N. Y. Acad. Sci. 55:548–73.

(6) Morrissey, R.E., et al. (1988) ''Evaluation of Rodent Sperm, Vaginal Cytology, and Reproductive Organ Weight Data from National Toxicology Program 13-week Studies.'' Fundam. Appl. Toxicol. 11:343–358.

(7) Russell, L.D., Ettlin, R.A., Sinhattikim, A.P., and Clegg, E.D (1990) Histological and Histopathological Evaluation of the Testes, Cache River Press, Clearwater, FL.

[59 FR 33093, June 27, 1994, as amended at 61 FR 36513, July 11, 1996]

§ 79.64 In vivo micronucleus assay.

(a) *Purpose.* The micronucleus assay is an *in vivo* cytogenetic test which uses erythrocytes in the bone marrow of rodents to detect chemical damage to the chromosomes or mitotic apparatus of mammalian cells. As the erythroblast develops into an erythrocyte (red blood cell), its main nucleus is extruded and may leave a micronucleus in the cell body; a few micronuclei form under normal conditions in blood elements. This assay is based on an increase in the frequency of micronucleated erythrocytes found in bone marrow from treated animals compared to that of control animals. The visualization of micronuclei is facilitated in these cells because they lack a main nucleus.

(b) *Definitions.* For the purposes of this section the following definitions apply:

Micronuclei mean small particles consisting of acentric fragments of chromosomes or entire chromosomes, which lag behind at anaphase of cell division. After telophase, these fragments may not be included in the nuclei of daughter cells and form single or multiple micronuclei in the cytoplasm.

Polychromatic erythrocyte (PCE) means an immature red blood cell that, because it contains RNA, can be differentiated by appropriate staining techniques from a normochromatic erythrocyte (NCE), which lacks RNA. In one to two days, a PCE matures into a NCE.

(c) *Test method*—(1) *Principle of the test method.* (i) Groups of rodents are exposed by the inhalation route for a minimum of 6 hours/day over a period of not less than 28 days to three or more concentrations of a test substance in air. Groups of animals are sacrificed at the end of the exposure period and femoral bone marrow is extracted. The bone marrow is then smeared onto glass slides, stained, and PCEs are scored for micronuclei. Researchers may need to run a trial at the highest tolerated concentration of the test atmosphere to optimize the sample collection time for micronucleated cells.

(ii) This assay may be done separately or in combination with the subchronic toxicity study, pursuant to the provisions in § 79.62.

(2) *Species and strain.* (i) The rat is the recommended test animal. Other rodent species may be used in this assay, but use of that species will be justified by the tester.

(ii) If a strain of mouse is used in this assay, the tester shall sample peripheral blood from an appropriate site on the test animal, e.g., the tail vein, as a source of normochromatic erythrocytes. Results shall be reported as outlined later in this guideline with ''normochromatic'' interchanged for ''polychromatic'', where specified.

(3) *Animal number and sex.* At least five female and five male animals per experimental/sample and control group shall be used. The use of a single sex or a smaller number of animals shall be justified.

(4) *Positive control group.* A single concentration of a compound known to produce micronuclei *in vivo* is adequate as a positive control if it shows a significant response at any one time point; additional concentration levels may be used. To select an appropriate concentration level, a pilot or trial study may be advisable. Initially, one concentration of the test substance

may be used, the maximum tolerated dose or that producing some indication of toxicity, e.g., a drop in the ratio of polychromatic to normochromatic erythrocytes. Intraperitoneal injection of 1,2-dimethyl-benz-anthracene or benzene are examples of positive control exposures. A concentration of 50–80 percent of an LD50 may be a suitable guide.

(d) *Test performance*—(1) *Inhalation exposure.* (i) All data developed within this study shall be in accordance with good laboratory practice provisions under § 79.60.

(ii) The general conduct of this study shall be in accordance with the vehicle emissions inhalation exposure guideline in § 79.61.

(2) *Preparation of slides and sampling times.* Within twenty-four hours of the last exposure, test animals will be sacrificed. One femur from each test animal will be removed and placed in fetal bovine serum. The bone marrow is removed, cells processed, and two bone marrow smears are made for each animal on glass microscope slides. The slides are stained with acridine- orange (AO) or another appropriate stain (Giemsa + Wright's, etc.) and examined under a microscope.

(3) *Analysis.* Slides shall be coded for study before microscopic analysis. At least 1,000 first-division erythrocytes per animal shall be scored for the incidence of micronuclei. Sexes will be analyzed separately.

(e) *Data and report*—(1) *Treatment of results.* In addition to the reporting requirements specified under §§ 79.60 and 79.61, the final test report must include the criteria for scoring micronuclei. Individual data shall be presented in a tabular form including both positive and negative controls and experimental groups. The number of polychromatic erythrocytes scored, the number of micronucleated erythrocytes, the percentage of micronucleated cells, and, where applicable, the percentage of micronucleated erythrocytes shall be listed separately for each experimental and control animal. Absolute numbers shall be included if percentages are reported.

(2) *Interpretation of data.* (i) There are several criteria for determining a positive response, one of which is a statistically significant dose-related increase in the number of micronucleated polychromatic erythrocytes. Another criterion may be based upon detection of a reproducible and statistically significant positive response for at least one of the test substance concentrations.

(ii) A test substance which does not produce either a statistically significant dose-related increase in the number of micronucleated polychromatic erythrocytes or a statistically significant and reproducible positive response at any one of the test points is considered nonmutagenic in this system.

(3) *Test evaluation.* (i) Positive results in the micronucleus test provide information on the ability of a chemical to induce micronuclei in erythrocytes of the test species under the conditions of the test. This damage may have been the result of chromosomal damage or damage to the mitotic apparatus.

(ii) Negative results indicate that under the test conditions the test substance does not produce micronuclei in the bone marrow of the test species.

(f) *Test report.* In addition to the reporting recommendations as specified under § 79.60, the following specific information shall be reported:

(1) Test atmosphere concentration(s) used and rationale for concentration selection.

(2) Rationale for and description of treatment and sampling schedules, toxicity data, negative and positive controls.

(3) Historical control data (negative and positive), if available.

(4) Details of the protocol used for slide preparation.

(5) Criteria for identifying micronucleated erythrocytes.

(6) Micronucleus analysis by animal and by group for each concentration (sexes analyzed separately).

(i) Ratio of polychromatic to normochromatic erythrocytes.

(ii) Number of polychromatic erythrocytes with micronuclei.

(iii) Number of polychromatic erythrocytes scored.

(7) Statistical methodology chosen for test analysis.

(g) *References.* For additional background information on this test guideline, the following references should be consulted.

(1) 40 CFR 798.5395, *In Vivo*, Mammalian Bone Marrow Cytogenetics Tests: Micronucleus Assay.

(2) Cihak, R. ''Evaluation of Benzidine by the Micronucleus Test.'' Mutation Research, 67: 383–384 (1979).

(3) Evans, H.J. ''Cytological Methods for Detecting Chemical Mutagens.'' Chemical Mutagens: Principles and Methods for Their Detection, Vol. 4. Ed. A. Hollaender (New York and London: Plenum Press, 1976) pp. 1–29.

(4) Heddle, J.A., *et al.* ''The Induction of Micronuclei as a Measure of Genotoxicity. A Report of the U.S. Environmental Protection Agency Gene-Tox Program.'' Mutation Research, 123:61–118 (1983).

(5) Preston, J.R. *et al.* ''Mammalian *In Vivo* and *In Vitro* Cytogenetics Assays: Report of the Gene-Tox Program.'' Mutation Research, 87:143–188 (1981).

(6) Schmid, W. ''The micronucleus test for cytogenetic analysis'', Chemical Mutagens, Principles and Methods for their Detection. Vol. 4 Hollaender A, (Ed. A ed. (New York and London: Plenum Press, (1976) pp. 31–53.

(7) Tice, R.E., and Al Pellom ''User's guide: Micronucleus assay data management and analysis system'', NTIS Order no. PB–90–212–598AS.

§ 79.65 In vivo sister chromatid exchange assay.

(a) *Purpose.* The *in vivo* sister chromatid exchange (SCE) assay detects the ability of a chemical to enhance the exchange of DNA between two sister chromatids of a duplicating chromosome. The most commonly used assays employ mammalian bone marrow cells or peripheral blood lymphocytes, often from rodent species.

(b) *Definitions.* For the purposes of this section, the following definitions apply:

C-metaphase means a state of arrested cell growth typically seen after treatment with a spindle inhibitor, *i.e.*, colchicine.

Sister chromatid exchange means a reciprocal interchange of the two chromatid arms within a single chromosome. This exchange is visualized during the metaphase portion of the cell cycle and presumably requires the enzymatic incision, translocation and ligation of at least two DNA helices.

(c) *Test method*—(1) *Principle of the test method.* (i) Groups of rodents are exposed by the inhalation route for a minimum of 6 hours/day over a period of not less than 28 days to three or more concentrations of a test substance in air. Groups of animals are sacrificed at the end of the exposure period and blood lymphocyte cell cultures are prepared from study animals. Cell growth is suspended after a time and cells are harvested, fixed and stained before scoring for SCEs. Researchers may need to run a trial at the highest tolerated concentration of the test atmosphere to optimize the sample collection time for second division metaphase cells.

(ii) This assay may be done separately or in combination with the subchronic toxicity study, pursuant to the provisions in § 79.62.

(2) *Description.* (i) The method described here employs peripheral blood lymphocytes (PBL) of laboratory rodents exposed to the test atmosphere.

(ii) Within twenty-four hours of the last exposure, test animal lymphocytes are obtained by heart puncture and duplicate cell cultures are started for each animal. Cultures are grown in bromo-deoxyuridine (BrdU), and then a spindle inhibitor (e.g., colchicine) is added to arrest cell growth. Cells are harvested, fixed, and stained and their chromosomes are scored for SCEs.

(3) *Species and strain.* The rat is the recommended test animal. Other rodent species may be used in this assay, but use of that species will be justified by the tester.

(4) *Animal number and sex.* At least five female and five male animals per experimental and control group shall be used. The use of a single sex or different number of animals shall be justified.

(5) *Positive control group.* A single concentration of a compound known to produce SCEs *in vivo* is adequate as a positive control if it shows a significant response at any one time point; additional concentration levels may be used. To select an appropriate concentration level, a pilot or trial study may be advisable. Initially, one concentration of the test substance may be used, the maximum tolerated dose or that producing some indication of

toxicity as evidenced by animal morbidity (including death) or target cell toxicity. Intraperitoneal injection of 1,2-dimethyl-benz-anthracene or benzene are examples of positive control exposures. A concentration of 50–80 percent of an LD50 would also be a suitable guide.

(6) *Inhalation exposure.* (i) All data developed within this study shall be in accordance with good laboratory practice provisions under § 79.60.

(ii) The general conduct of this study shall be in accordance with the vehicle emissions inhalation exposure guideline in § 79.61.

(d) *Test performance*—(1) *Treatment.* At the conclusion of the exposure period, all test animals are anaesthetized and heart punctures are performed. Lymphocytes are isolated over a Ficoll gradient and replicate cell cultures are started for each animal. After some 21 hours, the cells are treated with BrdU and returned to incubation. The following day, a spindle inhibitor (e.g., colchicine) is added to arrest cell growth in c-metaphase. Cells are harvested 4 hours later and second-division metaphase cells are washed and fixed in methanol:acetic acid, stained, and chromosome preparations are scored for SCEs.

(2) *Staining method.* Staining of slides to reveal SCEs can be performed according to any of several protocols. However, the fluorescence plus Giemsa method is recommended.

(3) *Number of cells scored.* (i) A minimum of 25 well-stained, second-division metaphase cells shall be scored for each animal for each cell type.

(ii) At least 100 consecutive metaphase cells shall be scored for the number of first, second, and third division metaphases for each animal for each cell type.

(iii) At least 1000 consecutive PBL's shall be scored for the number of metaphase cells present.

(iv) The number of cells to be analyzed per animal shall be based upon the number of animals used, the negative control frequency, the pre-determined sensitivity and the power chosen for the test. Slides shall be coded before microscopic analysis.

(e) *Data and report*—(1) *Treatment of results.* In addition to the reporting requirements specified under §§ 79.60 and 61, data shall be presented in tabular form, providing scores for both the number of SCE for each metaphase. Differences among animals within each group shall be considered before making comparisons between treated and control groups.

(2) *Statistical evaluation.* Data shall be evaluated by appropriate statistical methods.

(3) *Interpretation of results.* (i) There are several criteria for determining a positive result, one of which is a statistically significant dose-related increase in the number of SCE. Another criterion may be based upon detection of a reproducible and statistically significant positive response for at least one of the test concentrations.

(ii) A test substance which does not produce either a statistically significant dose-related increase in the number of SCE or a statistically significant and reproducible positive response at any one of the test concentrations is considered not to induce rearrangements of DNA segments in this system.

(iii) Both biological and statistical significance shall be considered together in the evaluation.

(4) *Test evaluation.* (i) A positive result in the *in vivo* SCE assay for either, or both, the lung or lymphocyte cultures indicates that under the test conditions the test substance induces reciprocal interchanges of DNA in duplicating chromosomes from lung or lymphocyte cells of the test species.

(ii) Negative results indicate that under the test conditions the test substance does not induce reciprocal interchanges in lung or lymphocyte cells of the test species.

(5) *Test report.* In addition to the reporting recommendations as specified under §§ 79.60 and 79.61, the following specific information shall be reported:

(i) Test concentrations used, rationale for concentration selection, negative and positive controls;

(ii) Toxic response data by concentration;

(iii) Schedule of administration of test atmosphere, BrdU, and spindle inhibitor;

(iv) Time of harvest after administration of BrdU;

(v) Identity of spindle inhibitor, its concentration and timing of treatment;

(vi) Details of the protocol used for cell culture and slide preparation;

(vii) Criteria for scoring SCE;

(viii) Replicative index, *i.e.*, [percent 1st division+(2×percent 2nd division) + (3×percent 3rd division) metaphases]/100; and

(ix) Mitotic activity, *i.e.*, # of metaphases/1000 cells.

(f) *References.* For additional background information on this test guideline, the following references should be consulted.

(1) 40 CFR 798.5915, *In vivo* Sister Chromatid Exchange Assay.

(2) Kato, H. ''Spontaneous Sister Chromatid Exchanges Detected by a BudR-Labeling Method.'' Nature, 251:70–72 (1974).

(4) Kligerman, A. D., *et al.* ''Sister Chromatid Exchange Analysis in Lung and Peripheral Blood Lymphocytes of Mice Exposed to Methyl Isocyanate by Inhalation.'' Environmental Mutagenesis 9:29–36 (1987).

(5) Kligerman, A.D., *et al.*, ''Cytogenetic Studies of Rodents Exposed to Styrene by Inhalation'', IARC Monographs no. 127 ''Butadiene and Styrene: Assesment of Health Hazards'' (Sorsa, *et al.*, eds), pp 217–224, 1993.

(6) Kligerman, A., *et al.*, ''Cytogenetic Studies of Mice Exposed to Styrene by Inhalation.'', Mutation Research, 280:35–43, 1992.

(7) Wolff, S., and P. Perry. ''Differential Giemsa Staining of Sister Chromatids and the Study of Sister Chromatid Exchanges Without Autoradiography.'' Chromosoma 48: 341–53 (1974).

§ 79.66 Neuropathology assessment.

(a) *Purpose.* (1) The histopathological and biochemical techniques in this guideline are designed to develop data in animals on morphologic changes in the nervous system associated with repeated inhalation exposures to motor vehicle emissions. These tests are not intended to provide a detailed evaluation of neurotoxicity. Neuropathological evaluation should be complemented by other neurotoxicity studies, e.g. behavioral and neurophysiological studies and/or general toxicity testing, to more completely assess the neurotoxic potential of an exposure.

(2) [Reserved]

(b) *Definition.* Neurotoxicity (NTX) or a neurotoxic effect is an adverse change in the structure or function of the nervous system following exposure to a chemical substance.

(c) *Principle of the test method.* (1) Laboratory rodents are exposed to one of several concentration levels of a test atmosphere for at least six hours daily over a period of 90 days. At the end of the exposure period, the animals are anaesthetized, perfused *in situ* with fixative, and tissues in the nervous system are examined grossly and prepared for microscopic examination. Starting with the highest dosage level, tissues are examined under the light microscope for morphologic changes, until a no-observed-adverse-effect level is determined. In cases where light microscopy has revealed neuropathology, the NOAEL may be confirmed by electron microscopy.

(2) The tests described herein may be combined with any other toxicity study, as long as none of the requirements of either are violated by the combination. Specifically, this assay may be combined with a subchronic toxicity study, pursuant to provisions in § 79.62.

(d) *Limit test.* If a test at one dose level of the highest concentration that can be achieved while maintaining a particle size distribution with a mass median aerodynamic diameter (MMAD) of 4 micrometers (μm) or less, using the procedures described in paragraph (a) of this section, produces no observable toxic effects and if toxicity would not be expected based upon data of structurally related compounds, then a full study using three dose levels might not be necessary. Expected human exposure though may indicate the need for a higher dose level.

(e) *Test procedures*—(1) *Animal selection*—(i) *Species and strain.* Testing shall be performed in the species being used in other NTX tests. A standard strain of laboratory rat is recommended. The choice of species shall take into consideration such factors as the comparative metabolism of the chemical and species sensitivity to the toxic effects of the test substance, as evidenced by the results of other studies, the potential for combined studies, and the availability of other toxicity data for the species.

(ii) *Age.* Animals shall be at least ten weeks of age at the start of exposure.

(iii) *Sex.* Both sexes shall be used unless it is demonstrated that one sex is refractory to the effects of exposure.

(2) *Number of Animals.* A minimum of ten animals per group shall be used. The tissues from each animal shall be examined separately.

(3) *Control Groups.* (i) A concurrent control group, exposed to clean, filtered air only, is required.

(ii) The laboratory performing the testing shall provide positive control data, e.g., results from repeated acrylamide exposure, as evidence of the ability of their histology procedures to detect neurotoxic endpoints. Positive control data shall be collected at the time of the test study unless the laboratory can demonstrate the adequacy of historical data for the planned study.

(iii) A satellite group of 10 female and 10 male test subjects shall be treated with the highest concentration level for the duration of the exposure and observed thereafter for reversibility, persistence, or delayed occurrence of toxic effects during a post-treatment period of not less than 28 days.

(4) *Inhalation exposure.* (i) All data developed within this study shall be in accordance with good laboratory practice provisions under § 79.60.

(ii) The general conduct of this study shall be in accordance with the vehicle emissions inhalation exposure guideline in § 79.61.

(5) *Study conduct*—(i) *Observation of animals.* All toxicological (e.g., weight loss) and neurological signs (e.g., motor disturbance) shall be recorded frequently enough to observe any abnormality, and not less than weekly.

(ii) The following is a minimal list of measures that shall be noted:

(A) Body weight;

(B) Subject's reactivity to general stimuli such as removal from the cage or handling;

(C) Description, incidence, and severity of any convulsions, tremors, or abnormal motor movements in the home cage;

(D) Descriptions and incidence of posture and gait abnormalities observed in the home cage; and

(E) Description and incidence of any unusual or abnormal behaviors, excessive or repetitive actions (stereotypies), emaciation, dehydration, hypotonia or hypertonia, altered fur appearance, red or crusty deposits around the eyes, nose, or mouth, and any other observations that may facilitate interpretation of the data.

(iii) *Sacrifice of animals*—(A) *General.* The goal of the techniques outlined for sacrifice of animals and preparation of tissues is preservation of tissue morphology to simulate the living state of the cell.

(B) *Perfusion technique.* Animals shall be perfused *in situ* by a generally recognized technique. For fixation suitable for light or electronic microscopy, saline solution followed by buffered 2.5 percent glutaraldehyde or buffered 4.0 percent paraformaldehyde, is recommended. While some minor modifications or variations in procedures are used in different laboratories, a detailed and standard procedure for vascular perfusion may be found in the text by Zeman and Innes (1963), Hayat (1970), and Spencer and Schaumburg (1980) under paragraph (g) of this section. A more sophisticated technique is described by Palay and Chan-Palay (1974) under paragraph (g) of this section.

(C) *Removal of brain and cord.* After perfusion, the bony structure (cranium and vertebral column) shall be exposed. Animals shall then be stored in fixative-filled bags at 4 °C for 8–12 hours. The cranium and vertebral column shall be removed carefully by trained technicians without physical damage of the brain and cord. Detailed dissection procedures may be found in the text by Palay and Chan-Palay (1974) under paragraph (g) of this section. After removal, simple measurement of the size (length and width) and weight of the whole brain (cerebrum, cerebellum, pons-medulla) shall be made. Any abnormal coloration or discoloration of the brain and cord shall also be noted and recorded.

(D) *Sampling.* Cross-sections of the following areas shall be examined: The forebrain, the center of the cerebrum, the midbrain, the cerebellum, and the medulla oblongata; the spinal cord at the cervical swelling (C_3–C_6), and proximal sciatic nerve (mid-thigh and sciatic notch) or tibial nerve (at knee). Other sites and tissue elements (e.g.,

gastrocnemius muscle) shall be examined if deemed necessary. Any observable gross changes shall be recorded.

(iv) *Specimen storage.* Tissue samples from both the central and peripheral nervous system shall be further immersion fixed and stored in appropriate fixative (e.g., 10 percent buffered formalin for light microscopy; 2.5 percent buffered gluteraldehyde or 4.0 percent buffered paraformaldehyde for electron microscopy) for future examination. The volume of fixative versus the volume of tissues in a specimen jar shall be no less than 25:1. All stored tissues shall be washed with buffer for at least 2 hours prior to further tissue processing.

(v) *Histopathology examination*—(A) *Fixation.* Tissue specimens stored in 10 percent buffered formalin may be used for this purpose. All tissues must be immersion fixed in fixative for at least 48 hours prior to further tissue processing.

(B) *Dehydration.* All tissue specimens shall be washed for at least 1 hour with water or buffer, prior to dehydration. (A longer washing time is needed if the specimens have been stored in fixative for a prolonged period of time.) Dehydration can be performed with increasing concentration of graded ethanols up to absolute alcohol.

(C) *Clearing and embedding.* After dehydration, tissue specimens shall be cleared with xylene and embedded in paraffin or paraplast. Multiple tissue specimens (e.g. brain, cord, ganglia) may be embedded together in one single block for sectioning. All tissue blocks shall be labelled showing at least the experiment number, animal number, and specimens embedded.

(D) *Sectioning.* Tissue sections, 5 to 6 microns in thickness, shall be prepared from the tissue blocks and mounted on standard glass slides. It is recommended that several additional sections be made from each block at this time for possible future needs for special stainings. All tissue blocks and slides shall be filed and stored in properly labeled files or boxes.

(E) *Histopathological techniques.* The following general testing sequence is proposed for gathering histopathological data:

(*1*) *General staining.* A general staining procedure shall be performed on all tissue specimens in the highest treatment group. Hematoxylin and eosin (H&E) shall be used for this purpose. The staining shall be differentiated properly to achieve bluish nuclei with pinkish background.

(*2*) *Peripheral nerve teasing.* Peripheral nerve fiber teasing shall be used. Detailed staining methodology is available in standard histotechnological manuals such as AFIP (1968), Ralis *et al.* (1973), and Chang (1979) under paragraph (g) of this section. The nerve fiber teasing technique is discussed in Spencer and Schaumberg (1980) under paragraph (g) of this section. A section of normal tissue shall be included in each staining to assure that adequate staining has occurred. Any changes shall be noted and representative photographs shall be taken. If a lesion(s) is observed, the special techniques shall be repeated in the next lower treatment group until no further lesion is detectable.

(F) *Examination.* All stained microscopic slides shall be examined with a standard research microscope. Examples of cellular alterations (e.g., neuronal vacuolation, degeneration, and necrosis) and tissue changes (e.g., gliosis, leukocytic infiltration, and cystic formation) shall be recorded and photographed.

(f) Data collection, reporting, and evaluation. In addition to information meeting the requirements stated under 40 CFR 79.60 and 79.61, the following specific information shall be reported:

(1) *Description of test system and test methods.* (i) A description of the general design of the experiment shall be provided. This shall include a short justification explaining any decisions where professional judgment is involved such as fixation technique and choice of stains; and

(ii) Positive control data from the laboratory performing the test that demonstrate the sensitivity of the procedures being used. Historical data may be used if all essential aspects of the experimental protocol are the same.

(2) *Results.* All observations shall be recorded and arranged by test groups.

This data may be presented in the following recommended format:

(i) *Description of signs and lesions for each animal.* For each animal, data must be submitted showing its identification (animal number, treatment, dose, duration), neurologic signs, location(s) nature of, frequency, and severity of lesion(s). A commonly-used scale such as 1+, 2+, 3+, and 4+ for degree of severity ranging from very slight to extensive may be used. Any diagnoses derived from neurologic signs and lesions including naturally occurring diseases or conditions, shall also be recorded;

(ii) *Counts and incidence of lesions, by test group.* Data shall be tabulated to show:

(A) The number of animals used in each group, the number of animals displaying specific neurologic signs, and the number of animals in which any lesion was found; and

(B) The number of animals affected by each different type of lesion, the average grade of each type of lesion, and the frequency of each different type and/or location of lesion.

(iii) *Evaluation of data.* (A) An evaluation of the data based on gross necropsy findings and microscopic pathology observations shall be made and supplied. The evaluation shall include the relationship, if any, between the animal's exposure to the test atmosphere and the frequency and severity of any lesions observed; and

(B) The evaluation of dose-response, if existent, for various groups shall be given, and a description of statistical method must be presented. The evaluation of neuropathology data shall include, where applicable, an assessment in conjunction with any other neurotoxicity studies, electrophysiological, behavioral, or neurochemical, which may be relevant to this study.

(g) *References.* For additional background information on this test guideline, the following references should be consulted.

(1) 40 CFR 798.6400, Neuropathology.
(2) AFIP Manual of Histologic Staining Methods. (New York: McGraw-Hill (1968).
(3) Chang, L.W. A Color Atlas and Manual for Applied Histochemistry. (Springfield, IL: Charles C. Thomas, 1979).
(4) Dunnick, J.K., et.al. Thirteen-week Toxicity Study of N-Hexane in B6C3F1 Mice After Inhalation Exposure (1989) Toxicology, 57, 163–172.
(5) Hayat, M.A. ''Vol. 1. Biological applications,'' Principles and techniques of electron microscopy. (New York: Van Nostrand Reinhold, 1970).
(6) Palay S.L., Chan-Palay, V. Cerebellar Cortex: Cytology and Organization. (New York: Springer-Verlag, 1974).
(7) Ralis, H.M., Beesley, R.A., Ralis, Z.A. Techniques in Neurohistology. (London: Butterworths, 1973).
(8) Sette, W. ''Pesticide Assessment Guidelines, Subdivision F, Neurotoxicity Test Guidelines.'' Report No. 540/09–91–123 U.S. Environmental Protection Agency 1991 (NTIS # PB91–154617).
(9) Spencer, P.S., Schaumburg, H.H. (eds). Experimental and Clinical Neurotoxicology. (Baltimore: Williams and Wilkins, 1980).
(10) Zeman, W., Innes, J.R.M. Craigie's Neuroanatomy of the Rat. (New York: Academic, 1963).

§79.67 Glial fibrillary acidic protein assay.

(a) *Purpose.* Chemical-induced injury of the nervous system, *i.e.*, the brain, is associated with astrocytic hypertrophy at the site of damage (see O'Callaghan, 1988 in paragraph (e)(3) in this section). Assays of glial fibrillary acidic protein (GFAP), the major intermediate filament protein of astrocytes, can be used to document this response. To date, a diverse variety of chemical insults known to be injurious to the central nervous system have been shown to increase GFAP. Moreover, increases in GFAP can be seen at concentrations below those necessary to produce cytopathology as determined by routine Nissl stains (standard neuropathology). Thus it appears that assays of GFAP represent a sensitive approach for documenting the existence and location of chemical-induced injury of the central nervous system. Additional functional, histopathological, and biochemical tests are necessary to assess completely the neurotoxic potential of any chemical. This biochemical test is intended to be used in conjunction with neurohistopathological studies.

(b) *Principle of the test method.* (1) This guideline describes the conduct of a radioimmunoassay for measurement of

the amount of GFAP in the brain of vehicle emission-exposed and unexposed control animals. It is based on modifications (O'Callaghan & Miller 1985 in paragraph (e)(5), O'Callaghan 1987 in paragraph (e)(1) of this section) of the dot-immunobinding procedure described by Jahn *et al.* (1984) in paragraph (e)(2) of this section. Briefly, brain tissue samples from study animals are assayed for total protein, diluted in dot-immunobinding buffer, and applied to nitrocellulose sheets. The spotted sheets are then fixed, blocked, washed and incubated in anti-GFAP antibody and [I^{125}] Protein A. Bound protein A is then quantified by gamma spectrometry. In lieu of purified protein standards, standard curves are constructed from dilution of a single control sample. By comparing the immunoreactivity of individual samples (both control and exposed groups) with that of the sample used to generate the standard curve, the relative immunoreactivity of each sample is obtained. The immunoreactivity of the control groups is normalized to 100 percent and all data are expressed as a percentage of control. A variation on this radioimmunoassay procedure has been proposed (O'Callaghan 1991 in paragraph (e)(4) of this section) which uses a ''sandwich'' of GFAP, anti-GFAP, and a chromophore in a microtiter plate format enzyme-link immunosorbent assay (ELISA). The use of this variation shall be justified.

(2) This assay may be done separately or in combination with the subchronic toxicity study, pursuant to the provisions of § 79.62.

(c) *Test procedure*—(1) *Animal selection*—(i) *Species and strain.* Test shall be performed on the species being used in concurrent testing for neurotoxic or other health effect endpoints. This will generally be a species of laboratory rat. The use of other rodent or non-rodent species shall be justified.

(ii) *Age.* Based on other concurrent testing, young adult rats shall be used. Study rodents shall not be older than ten weeks at the start of exposures.

(iii) *Number of animals.* A minimum of ten animals per group shall be used. The tissues from each animal shall be examined separately.

(iv) *Sex.* Both sexes shall be used unless it is demonstrated that one sex is refractory to the effects.

(2) *Materials.* The materials necessary to perform this study are [I^{125}] Protein A (2–10 μCi/μg), Anti-sera to GFAP, nitrocellulose paper (0.1 or 0.2 μm pore size), sample application template (optional; e.g., ''Minifold II'', Schleicher & Schuell, Keene, NH), plastic sheet incubation trays.

(3) *Study conduct.* (i) All data developed within this study shall be in accordance with good laboratory practice provisions under § 79.60.

(ii) *Tissue Preparation.* Animals are euthanized 24 hours after the last exposure and the brain is excised from the skull. On a cold dissecting platform, the following six regions are dissected freehand: cerebellum; cerebral cortex; hippocampus; striatum; thalamus/hypothalamus; and the rest of the brain. Each region is then weighed and homogenized in 10 volumes of hot (70–90 °C) 1 percent (w/v) sodium dodecyl sulfate (SDS). Homogenization is best achieved through sonic disruption. A motor driven pestle inserted into a tissue grinding vessel is a suitable alternative. The homogenized samples can then be stored frozen at −70 °C for at least 4 years without loss of GFAP content.

(iii) *Total Protein Assay.* Aliquots of the tissue samples are assayed for total protein using the method of Smith *et al.* (1985) in paragraph (e)(7) of this section. This assay may be purchased in kit form (e.g., Pierce Chemical Company, Rockford, IL).

(iv) *Sample Preparation.* Dilute tissue samples in sample buffer (120 mM KCl, 20 mM NaCl, 2 mM $MgCl_2$), 5 mM Hepes, pH 7.4, 0.7 percent Triton X–100) to a final concentration of 0.25 mg total protein per ml (5 μg/20 μl).

(v) *Preparation of Standard Curve.* Dilute a single control sample in sample buffer to give at least five standards, between 1 and 10 μg total protein per 20 μl. The suggested values of total protein per 20 μl sample buffer are 1.25, 2.50, 3.25, 5.0, 6.25, 7.5, 8.75, and 10.0 μg.

(vi) *Preparation of Nitrocellulose Sheets.* Nitrocellulose sheets of 0.1 or 0.2 micron pore size are rinsed by immersion in distilled water for 5 minutes and then air dried.

(vii) *Sample Application.* Samples can be spotted onto the nitrocellulose sheets free-hand or with the aid of a template. For free-hand application, draw a grid of squares approximately 2 centimeters by 2 centimeters (cm) on the nitrocellulose sheets using a soft pencil. Spot 5–10 µl portions to the center of each square for a total sample volume of 20 µl. For template aided sample application a washerless microliter capacity sample application manifold is used. Position the nitrocellulose sheet in the sample application device as recommended by the manufacturer and spot a 20 µl sample in one application. Do not wet the nitrocellulose or any support elements prior to sample application. Do not apply vacuum during or after sample application. After spotting samples (using either method), let the sheets air dry. The sheets can be stored at room temperature for several days after sample application.

(viii) *Standard Incubation Conditions.* These conditions have been described by Jahn *et al.* (1984) in paragraph (e)(2) of this section. All steps are carried out at room temperature on a flat shaking platform (one complete excursion every 2–3 seconds). For best results, do not use rocking or orbital shakers. Perform the following steps in enough solution to cover the nitrocellulose sheets to a depth of 1 cm.

(A) Incubate 20 minutes in fixer (25 percent (v/v) isopropanol, 10 percent (v/v) acetic acid).

(B) Discard fixer, wash several times in deionized water to eliminate the fixer, and then incubate for 5 minutes in Tris-buffered saline (TBS): 200 mM NaCL, 60 mM Tris-HCl to pH 7.4.

(C) Discard TBS and incubate 1 hour in blocking solution (0.5 percent gelatin (w/v)) in TBS.

(D) Discard blocking solution and incubate for 2 hours in antibody solution (anti-GFAP antiserum diluted to the desired dilution in blocking solution containing 0.1 percent Triton X–100). Serum anti-bovine GFAP, which cross reacts with GFAP from rodents and humans, can be obtained commercially (e.g., Dako Corp.) and used at a dilution of 1:500.

(E) Discard antibody solution, and wash in 4 changes of TBS for 5 minutes each time. Then wash in TBS for 10 minutes.

(F) Discard TBS and incubate in blocking solution for 30 minutes.

(G) Discard blocking solution and incubate for 1 hour in Protein A solution ([I^{125}]-labeled Protein A diluted in blocking solution containing 0.1 percent Triton X–100, sufficient to produce 2000 counts per minute (cpm) per 10 µl of Protein A solution).

(H) Remove Protein A solution (it may be reused once). Wash in 0.1 percent Triton X–100 in TBS (TBSTX) for 5 minutes, 4 times. Then wash in TBSTX for 2–3 hours for 4 additional times. An overnight wash in a larger volume can be used to replace the last 4 washes.

(I) Hang sheets to air-dry. Cut out squares or spots and count radioactivity in a gamma counter.

(ix) *Expression of data.* Compare radioactivity counts for samples obtained from control and treated animals with counts obtained from the standard curve. By comparing the immunoreactivity (counts) of each sample with that of the standard curve, the relative amount of GFAP in each sample can be determined and expressed as a percent of control.

(d) *Data Reporting and Evaluation*—(1) *Test Report.* In addition to information meeting the requirements stated under 40 CFR 79.60, the following specific information shall be reported:

(i) Body weight and brain region weights at time of sacrifice for each subject tested;

(ii) Indication of whether each subject survived to sacrifice or time of death;

(iii) Data from control animals and blank samples; and

(iv) Statistical evaluation of results;

(2) *Evaluation of Results.* (i) Results shall be evaluated in terms of the extent of change in the amount of GFAP as a function of treatment and dose. GFAP assays (of any brain region) from a minimum of 6 samples typically will result in a standard error of the mean of +/− 5 percent. In this case, a chemically-induced increase in GFAP of 115 percent of control is likely to be statistically significant.

(ii) The results of this assay shall be compared to and evaluated with any

relevant behavioral and histopathological data.

(e) *References.* For additional background information on this test guideline the following references should be consulted.

(1) Brock, T.O and O'Callaghan, J.P. 1987. Quantitative changes in the synaptic vesicle proteins, synapsin I and p38 and the astrocyte specific protein, glial fibrillary acidic protein, are associated with chemical-induced injury to the rat central nervous system, J. Neurosci. 7:931–942.

(2) Jahn, R., Schiebler, W. Greengard, P. 1984. A quantitative dot-immunobinding assay for protein using nitrocellulose membrane filters. Proc. Natl. Acad. Sci. U.S.A. 81:1684–1687.

(3) O'Callaghan, J.P. 1988. Neurotypic and gliotypic protein as biochemical markers of neurotoxicity. Neurotoxicol. Teratol. 10:445–452.

(4) O'Callaghan, J.P. 1991. Quantification of glial fibrillary acidic protein: comparison of slot-immunobinding assays with a novel sandwich ELISA. Neurotoxicol. Teratol. 13:275–281.

(5) O'Callaghan, J.P. and Miller, D.B. 1985. Cerebellar hypoplasia in the Gunn rat is associated with quantitative changes in neurotypic and gliotypic proteins. J. Pharmacol. Exp. Ther. 234:522–532.

(6) Sette, W.F. ''Pesticide Assessment Guidelines, Subdivision 'F', Hazard Evaluation: Human and Domestic Animals, Addendum 10, Neurotoxicity, Series 81, 82, and 83'' US-EPA, Office of Pesticide Programs, EPA–540/09–91–123, March 1991.

(7) Smith, P.K., Krohn, R.I., Hermanson, G.T., Mallia, A.K., Gartner, F.H., Provenzano, M.D., Fujimoto, E.K., Goeke, N.M., Olson, B.J., Klenk, D.C. 1985. Measurement of protein using bicinchoninic acid. Annal. Biochem. 150:76–85.

§ 79.68 Salmonella typhimurium reverse mutation assay.

(a) *Purpose.* The *Salmonella typhimurium* histidine (his) reversion system is a microbial assay which measures $his^- \rightarrow his^+$ reversion induced by chemicals which cause base changes or frameshift mutations in the genome of the microorganism *Salmonella typhimurium.*

(b) *Definitions.* For the purposes of this section, the following definitions apply:

Base pair mutagen means an agent which causes a base change in DNA. In a reversion assay, this change may occur at the site of the original mutation or at a second site in the chromosome.

Frameshift mutagen is an agent which causes the addition or deletion of single or multiple base pairs in the DNA molecule.

Salmonella typhimurium reverse mutation assay detects mutation in a gene of a histidine-requiring strain to produce a histidine independent strain of this organism.

(c) *Reference substances.* These may include, but need not be limited to, sodium azide, 2-nitrofluorene, 9-aminoacridine, 2-aminoanthracene, congo red, benzopurpurin 4B, trypan blue or direct blue 1.

(d) Test method.—(1) *Principle.* Motor vehicle combustion emissions from fuel or additive/base fuel mixtures are, first, filtered to trap particulate matter and, then, passed through a sorbent resin to trap semi-volatile gases. Bacteria are separately exposed to the extract from both the filtered particulates and the resin-trapped organics. Assays are conducted using both test mixtures with and without a metabolic activation system and exposed cells are plated onto minimal medium. After a suitable period of incubation, revertant colonies are counted in test cultures and compared to the number of spontaneous revertants in unexposed control cultures.

(2) *Description.* Several methods for performing the test have been described. The procedures described here are for the direct plate incorporation method and the azo-reduction method. Among those used are:

(i) Direct plate incorporation method;

(ii) Preincubation method;

(iii) Azo-reduction method;

(iv) Microsuspension method; and

(v) Spiral assay.

(3) *Strain selection*—(i) *Designation.* Five tester strains shall be used in the assay. At the present time, TA1535, TA1537, TA98, and TA100 are designated as tester strains. The fifth strain will be chosen from the pool of Salmonella strains commonly used to determine the degree to which nitrated organic compounds, *i.e.*, nitroarenes, contribute to the overall mutagenic activity of a test substance. TA98/1,8–DNP_6 or

other suitable Rosenkranz nitro-reductase resistant strains will be considered acceptable. The choice of the particular strain is left to the discretion of the researcher. However, the researcher shall justify the use of the selected bacterial tester strains.

(ii) *Preparation and storage of bacterial tester strains.* Recognized methods of stock culture preparation and storage shall be used. The requirement of histidine for growth shall be demonstrated for each strain. Other phenotypic characteristics shall be checked using such methods as crystal violet sensitivity and resistance to ampicillin. Spontaneous reversion frequency shall be in the range expected as reported in the literature and as established in the laboratory by historical control values.

(iii) *Bacterial growth.* Fresh cultures of bacteria shall be grown up to the late exponential or early stationary phase of growth (approximately 108–109 cells per ml).

(4) *Exogenous metabolic activation.* Bacteria shall be exposed to the test substance both in the presence and absence of an appropriate exogenous metabolic activation system. For the direct plate incorporation method, the most commonly used system is a cofactor-supplemented postmitochondrial fraction prepared from the livers of rodents treated with enzyme-inducing agents, such as Aroclor 1254. For the azo-reduction method, a cofactor- supplemented postmitochondrial fraction (S–9) prepared from the livers of untreated hamsters is preferred. For this method, the cofactor supplement shall contain flavin mononucleotide, exogenous glucose 6-phosphate dehydrogenase, NADH and excess of glucose-6-phosphate.

(5) *Control groups*—(i) *Concurrent controls.* Concurrent positive and negative (untreated) controls shall be included in each experiment. Positive controls shall ensure both strain responsiveness and efficacy of the metabolic activation system.

(ii) Strain specific positive controls shall be included in the assay. Examples of strain specific positive controls are as follows:

(A) Strain TA1535, TA100: sodium azide;

(B) TA98: 2-nitrofluorene (without activation), 2-anthramine (with activation);

(C) TA1537: 9-aminoacridine; and

(D) TA98/1,8–DNP$_{6}$≦ benzo(a)pyrene (with activation).

The papers by Claxton *et al.*, 1991 and 1992 in paragraph (g) in this section will provide helpful information for the selection of positive controls.

(iii) *Positive controls to ensure the efficacy of the activation system.* The positive control reference substances for tests including a metabolic activation system shall be selected on the basis of the type of activation system used in the test. 2-Aminoanthracene is an example of a positive control compound in plate-incorporation tests using postmitochondrial fractions from the livers of rodents treated with enzyme-inducing agents such as Aroclor-1254. Congo red is an example of a positive control compound in the azo-reduction method. Other positive control reference substances may be used.

(iv) *Class-specific positive controls.* The azo-reduction method shall include positive controls from the same class of compounds as the test agent wherever possible.

(6) *Sampling the test atmosphere.*—(i) Extracts of test emissions are collected on Teflon®-coated glass fiber filters using an exhaust dilution setup. The particulates are extracted with dichloromethane (DCM) using Soxhlet extraction techniques. Extracts in DCM can be stored at dry ice temperatures until use.

(ii) Gaseous hydrocarbons passing through the filter are trapped by a porous, polymer resin, like XAD–2/styrene-divinylbenzene, or an equivalent product. Methylene chloride is used to extract the resin and the sample is evaporated to dryness before storage or use.

(iii) Samples taken from this material are then used to expose the cells in this assay. Final concentration of extracts in solvent/vehicle, or after solvent exchange, shall not interfere with cell viability or growth rate. The paper by Stump (1982) in paragraph (g) of this section is useful for preparing extracts of particulate and semi-volatile organic compounds from diesel and gasoline exhaust stream.

(iv) Exposure concentrations. (A) The test should initially be performed over a broad range of concentrations. Among the criteria to be taken into consideration for determining the upper limits of test substance concentration are cytotoxicity and solubility. Cytotoxicity of the test chemical may be altered in the presence of metabolic activation systems. Toxicity may be evidenced by a reduction in the number of spontaneous revertants, a clearing of the background lawn or by the degree of survival of treated cultures. Relatively insoluble samples shall be tested up to the limits of solubility. The upper test chemical concentration shall be determined on a case by case basis.

(B) Generally, a maximum of 5 mg/plate for pure substances is considered acceptable. At least 5 different concentrations of test substance shall be used with adequate intervals between test points.

(C) When appropriate, a single positive response shall be confirmed by testing over a narrow range of concentrations.

(e) *Test performance.* All data developed within this study shall be in accordance with good laboratory practice provisions under § 79.60.

(1) Direct plate incorporation method. When testing with metabolic activation, test solution, bacteria, and 0.5 ml of activation mixture containing an adequate amount of postmitochondrial fraction shall be added to the liquid overlay agar and mixed. This mixture is poured over the surface of a selective agar plate. Overlay agar shall be allowed to solidify before incubation. At the end of the incubation period, revertant colonies per plate shall be counted. When testing without metabolic activation, the test sample and 0.1 ml of a fresh bacterial culture shall be added to 2.0 ml of overlay agar.

(2) Azo-reduction method. When testing with metabolic activation, 0.5 ml of activation mixture containing 150 µl of postmitochondrial fraction and 0.1 ml of bacterial culture shall be added to a test tube kept on ice. 0.1 ml of test solution shall be added, and the tubes shall be incubated with shaking at 30 °C for 30 minutes. At the end of the incubation period, 2.0 ml of agar shall be added to each tube, the contents mixed and poured over the surface of a selective agar plate. Overlay agar shall be allowed to solidify before incubation. At the end of the incubation period, revertant colonies per plate shall be counted. For tests without metabolic activation, 0.5 ml of buffer shall be used in place of the 0.5 ml of activation mixture. All other procedures shall be the same as those used for the test with metabolic activation.

(3) Other methods/modifications may also be appropriate.

(4) Media. An appropriate selective medium with an adequate overlay agar shall be used.

(5) Incubation conditions. All plates within a given experiment shall be incubated for the same time period. This incubation period shall be for 48–72 hours at 37 °C.

(6) Number of cultures. All plating shall be done at least in triplicate.

(f) *Data and report*—(1) *Treatment of results.* Data shall be presented as number of revertant colonies per plate, revertants per kilogram (or liter) of fuel, and as revertants per kilometer (or mile, or brake-horsepower/hour, as appropriate) for each replicate and dose. These same measures shall be recorded on both the negative and positive control plates. The mean number of revertant colonies per plate, revertants per kilogram (or liter) of fuel, and revertants per kilometer (or mile, or brake-horsepower/hour), as well as individual plate counts and standard deviations shall be presented for the test substance, positive control, and negative control plates.

(2) *Statistical evaluation.* Data shall be evaluated by appropriate statistical methods. Those methods shall include, at a minimum, means and standard deviations of the reversion data.

(3) *Interpretation of results.* (i) There are several criteria for determining a positive result, one of which is a statistically significant dose-related increase in the number of revertants. Another criterion may be based upon detection of a reproducible and statistically significant positive response for at least one of the test substance concentrations.

(ii) A test substance which does not produce either a statistically significant dose-related increase in the number of revertants or a statistically significant and reproducible positive response at any one of the test points is considered nonmutagenic in this system.

(iii) Both biological and statistical significance shall be considered together in the evaluation.

(4) *Test evaluation.* (i) Positive results from the *Salmonella typhimurium* reverse mutation assay indicate that, under the test conditions, the test substance induces point mutations by base changes or frameshifts in the genome of this organism.

(ii) Negative results indicate that under the test conditions the test substance is not mutagenic in Salmonella typhimurium.

(5) *Test report.* In addition to the reporting recommendations as specified under 40 CFR 79.60, the following specific information shall be reported:

(i) Sampling method(s) used and manner in which cells are exposed to sample solution;

(ii) Bacterial strains used;

(iii) Metabolic activation system used (source, amount and cofactor); details of preparation of postmitochondrial fraction;

(iv) Concentration levels and rationale for selection of concentration range;

(v) Description of positive and negative controls, and concentrations used, if appropriate;

(vi) Individual plate counts, mean number of revertant colonies per plate, number of revertants per kilometer (or mile, or brake-horsepower/hour), and standard deviation; and

(g) *References.* For additional background information on this test guideline, the following references should be consulted.

(1) 40 CFR 798.5265, The *Salmonella typhimurium* reverse mutation asay.

(2) Ames, B.N., McCann, J., Yamasaki, E. ''Methods for detecting carcinogens and mutagens with the Salmonella/mammalian microsome mutagenicity test,'' Mutation Research 31:347–364 (1975).

(3) Huisingh, J.L., et al.,''Mutagenic and Carcinogenic Potency of Extracts of Diesel and Related Environmental Emissions: Study Design, Sample Generation, Collection, and Preparation''. In: Health Effects of Diesel Engine Emissions, Vol. II, W.E. Pepelko, R., M., Danner and N. A. Clarke (Eds.), US EPA, Cincinnati, EPA–600/9–80–057b, pp. 788–800 (1980).

(4) [Reserved]

(5) Claxton, L.D., Allen, J., Auletta, A., Mortelmans, K., Nestmann, E., Zeiger, E. ''Guide for the *Salmonella typhimurium* mammalian microsome tests for bacterial mutagenicity'' Mutation Research 189(2):83–91 (1987).

(6) Claxton, L., Houk, V.S., Allison, J.C., Creason, J., ''Evaluating the relationship of metabolic activation system concentrations and chemical dose concentrations for the Salmonella Spiral and Plate Assays'' Mutation Research 253:127–136 (1991).

(7) Claxton, L., Houk, V.S., Monteith, L.G., Myers, L.E., Hughes, T.J., ''Assessing the use of known mutagens to calibrate the *Salmonella typhimurium* mutagenicity assay: I. Without exogenous activation.'' Mutation Research 253:137–147 (1991).

(8) Claxton, L., Houk, V.S., Warner, J.R., Myers, L.E., Hughes, T.J., ''Assessing the use of known mutagens to calibrate the *Salmonella typhimurium* mutagenicity assay: II. With exogenous activation.'' Mutation Research 253:149–159 (1991).

(9) Claxton, L., Creason, J., Lares, B., Augurell, E., Bagley, S., Bryant, D.W., Courtois, Y.A., Douglas, G., Clare, C.B., Goto, S., Quillardet, P., Jagannath, D.R., Mohn, G., Neilsen, P.A., Ohnishi, Y., Ong, T., Pederson, T.C., Shimizu, H., Nylund, L., Tokiwa, H., Vink, I.G.R., Wang, Y., Warshawsky, D., ''Results of the IPCS Collaborative Study on Complex Mixtures'' Mutation Research 276:23–32 (1992).

(10) Claxton, L., Douglas, G., Krewski, D., Lewtas, J., Matsushita, H., Rosenkranz, H., ''Overview, conclusions, and recommendations of the IPCS Collaborative Study on Complex Mixtures'' Mutation Research 276:61–80 (1992).

(11) Houk, V.S., Schalkowsky, S., and Claxton, L.D., ''Development and Validation of the Spiral Salmonella Assay: An Automated Approach to Bacterial Mutagenicity Testing'' Mutation Research 223:49–64 (1989).

(12) Jones, E., Richold, M., May, J.H., and Saje, A. ''The Assessment of the Mutagenic Potential of Vehicle Engine Exhaust in the Ames Salmonella Assay Using a Direct Exposure Method'' Mutation Research 97:35–40 (1985).

(13) Maron, D., and Ames, B. N., Revised methods for the Salmonella mutagenicity test, Mutation Research, 113:173–212 (1983).
(14) Prival, M.J., and Mitchell, V.D. ''Analysis of a method for testing azo dyes for mutagenic activity in Salmonella typhimurium in the presence of flavin mononucleotide and hamster liver S–9,'' Mutation Research 97:103–116 (1982).
(15) Rosenkranz, H.S., et.al. ''Nitropyrenes: Isolation, identification, and reduction of mutagenic impurities in carbon black and toners'' Science 209:1039–43 (1980).
(16) Stump, F., Snow, R., et.al., ''Trapping gaseous hydrocarbons for mutagenic testing'' SAE Technical Paper Series, No. 820776 (1982).
(17) Vogel, H.J., Bonner, D.M. ''Acetylornithinase of E. coli: partial purification and some properties,'' Journal of Biological Chemistry. 218:97–106 (1956).

[59 FR 33093, June 27, 1994, as amended at 61 FR 36513, July 11, 1996]

PART 80—REGULATION OF FUELS AND FUEL ADDITIVES

Subpart A—General Provisions

Sec.
80.1 Scope.
80.2 Definitions.
80.3 Test methods.
80.4 Right of entry; tests and inspections.
80.5 Penalties.
80.7 Requests for information.

Subpart B—Controls and Prohibitions

80.20—80.21 [Reserved]
80.22 Controls and prohibitions.
80.23 Liability for violations.
80.24 Controls applicable to motor vehicle manufacturers.
80.25 [Reserved]
80.26 Confidentiality of information.
80.27 Controls and prohibitions on gasoline volatility.
80.28 Liability for violations of gasoline volatility controls and prohibitions.
80.29 Controls and prohibitions on diesel fuel quality.
80.30 Liability for violations of diesel fuel control and prohibitions.
80.32 Controls applicable to liquefied petroleum gas retailers and wholesale purchaser-consumers.
80.33 Controls applicable to natural gas retailers and wholesale purchaser-consumers.

Subpart C—Oxygenated Gasoline

80.35 Labeling of retail gasoline pumps; oxygenated gasoline.
80.36–80.39 [Reserved]

Subpart D—Reformulated Gasoline

80.40 Fuel certification procedures.
80.41 Standards and requirements for compliance.
80.42 Simple emissions model.
80.43–80.44 [Reserved]
80.45 Complex emissions model.
80.46 Measurement of reformulated gasoline fuel parameters.
80.47 [Reserved]
80.48 Augmentation of the complex emission model by vehicle testing.
80.49 Fuels to be used in augmenting the complex emission model through vehicle testing.
80.50 General test procedure requirements for augmentation of the emission models.
80.51 Vehicle test procedures.
80.52 Vehicle preconditioning.
80.53–80.54 [Reserved]
80.55 Measurement methods for benzene and 1,3-butadiene.
80.56 Measurement methods for formaldehyde and acetaldehyde.
80.57–80.58 [Reserved]
80.59 General test fleet requirements for vehicle testing.
80.60 Test fleet requirements for exhaust emission testing.
80.61 [Reserved]
80.62 Vehicle test procedures to place vehicles in emitter group sub-fleets.
80.63–80.64 [Reserved]
80.65 General requirements for refiners, importers, and oxygenate blenders.
80.66 Calculation of reformulated gasoline properties.
80.67 Compliance on average.
80.68 Compliance surveys.
80.69 Requirements for downstream oxygenate blending.
80.70 Covered areas.
80.71 Descriptions of VOC-control regions.
80.72 Procedures for opting out of the covered areas.
80.73 Inability to produce conforming gasoline in extraordinary circumstances.
80.74 Recordkeeping requirements.
80.75 Reporting requirements.
80.76 Registration of refiners, importers or oxygenate blenders.
80.77 Product transfer documentation.
80.78 Controls and prohibitions on reformulated gasoline.
80.79 Liability for violations of the prohibited activities.
80.80 Penalties.
80.81 Enforcement exemptions for California gasoline.
80.82 Conventional gasoline marker. [Reserved]
80.83 Renewable oxygenate requirements.
80.84–80.89 [Reserved]

Subpart E—Anti-Dumping

80.90 Conventional gasoline baseline emissions determination.
80.91 Individual baseline determination.
80.92 Baseline auditor requirements.
80.93 Individual baseline submission and approval.
80.94–80.100 [Reserved]
80.101 Standards applicable to refiners and importers.
80.102 Controls applicable to blendstocks.
80.103 Registration of refiners and importers.
80.104 Recordkeeping requirements.
80.105 Reporting requirements.
80.106 Product transfer documents.
80.107–80.124 [Reserved]

Subpart F—Attest Engagements

80.125 Attest engagements.
80.126 Definitions.
80.127 Sample size guidelines.
80.128 Agreed upon procedures for refiners and importers.
80.129 Agreed upon procedures for downstream oxygenate blenders.
80.130 Agreed upon procedures reports.
80.131–80.135 [Reserved]

Subpart G—Detergent Gasoline

80.140 Definitions.
80.141 Interim detergent gasoline program.
80.142–80.154 [Reserved]
80.155 Interim detergent program controls and prohibitions.
80.156 Liability for violations of the interim detergent program controls and prohibitions.
80.157 Volumetric additive reconciliation (''VAR''), equipment calibration, and recordkeeping requirements.
80.158 Product transfer documents (PTDs).
80.159 Penalties.
80.160 Exemptions.
80.161 Detergent additive certification program.
80.162 Additive compositional data.
80.163 Detergent certification options.
80.164 Certification test fuels.
80.165 Certification test procedures and standards.
80.166 Carburetor deposit control performance test and test fuel guidelines.
80.167 Confirmatory testing.
80.168 Detergent certification program controls and prohibitions.
80.169 Liability for violations of the detergent certification program controls and prohibitions.
80.170 Volumetric additive reconciliation (VAR), equipment calibration, and recordkeeping requirements.
80.171 Product transfer documents (PTDs).
80.172 Penalties.
80.173 Exemptions.
80.174 Addresses.

APPENDIX A TO PART 80—TEST FOR THE DETERMINATION OF PHOSPHORUS IN GASOLINE
APPENDIX B TO PART 80—TEST METHODS FOR LEAD IN GASOLINE
APPENDIX C TO PART 80—[RESERVED]
APPENDIX D TO PART 80—SAMPLING PROCEDURES FOR FUEL VOLATILITY
APPENDIX E TO PART 80—TEST FOR DETERMINING REID VAPOR PRESSURE (RVP) OF GASOLINE AND GASOLINE—OXYGENATE BLENDS
APPENDIX F TO PART 80—TEST FOR DETERMINING THE QUANTITY OF ALCOHOL IN GASOLINE
APPENDIX G TO PART 80—SAMPLING PROCEDURES FOR DIESEL FUEL

AUTHORITY: Secs. 114, 211, and 301(a) of the Clean Air Act, as amended (42 U.S.C. 7414, 7545 and 7601(a)).

SOURCE: 38 FR 1255, Jan. 10, 1973, unless otherwise noted.

EFFECTIVE DATE NOTE: At 59 FR 7716, Feb. 16, 1994, EPA published amendments to part 80 containing information collection requirements. These amendments will not become effective until approval has been given by the Office of Management and Budget (OMB).

Subpart A—General Provisions

§80.1 Scope.

(a) This part prescribes regulations for the control and/or prohibition of fuels and additives for use in motor vehicles and motor vehicle engines. These regulations are based upon a determination by the Administrator that the emission product of a fuel or additive will endanger the public health, or will impair to a significant degree the performance of a motor vehicle emission control device in general use or which the Administrator finds has been developed to a point where in a reasonable time it would be in general use were such regulations promulgated; and certain other findings specified by the Act.

(b) Nothing in this part is intended to preempt the ability of State or local governments to control or prohibit any fuel or additive for use in motor vehicles and motor vehicle engines which is not explicitly regulated by this part.

[38 FR 1255, Jan. 10, 1973, as amended at 38 FR 33741, Dec. 6, 1973; 42 FR 25732, May 19, 1977]

§ 80.2 Definitions.

As used in this part:

(a) *Act* means the Clean Air Act, as amended (42 U.S.C. 1857 *et seq.*).

(b) *Administrator* means the Administrator of the Environmental Protection Agency.

(c) *Gasoline* means any fuel sold in any State[1] for use in motor vehicles and motor vehicle engines, and commonly or commercially known or sold as gasoline.

(d) [Reserved]

(e) *Lead additive* means any substance containing lead or lead compounds.

(f) [Reserved]

(g) *Unleaded gasoline* means gasoline which is produced without the use of any lead additive and which contains not more than 0.05 gram of lead per gallon and not more than 0.005 gram of phosphorus per gallon.

(h) *Refinery* means a plant at which gasoline or diesel fuel is produced.

(i) *Refiner* means any person who owns, leases, operates, controls, or supervises a refinery.

(j) *Retail outlet* means any establishment at which gasoline, diesel fuel, methanol, natural gas or liquefied petroleum gas is sold or offered for sale for use in motor vehicles.

(k) *Retailer* means any person who owns, leases, operates, controls, or supervises a retail outlet.

(l) *Distributor* means any person who transports or stores or causes the transportation or storage of gasoline or diesel fuel at any point between any gasoline or diesel fuel refinery or importer's facility and any retail outlet or wholesale purchaser-consumer's facility.

(m) *Lead additive manufacturer* means any person who produces a lead additive or sells a lead additive under his own name.

(n) *Reseller* means any person who purchases gasoline or diesel fuel identified by the corporate, trade, or brand name of a refiner from such refiner or a distributor and resells or transfers it to retailers or wholesale purchaser-consumers displaying the refiner's brand, and whose assets or facilities are not substantially owned, leased, or controlled by such refiner.

(o) *Wholesale purchaser-consumer* means any organization that is an ultimate consumer of gasoline, diesel fuel, methanol, natural gas or liquefied petroleum gas and which purchases or obtains gasoline, diesel fuel, natural gas or liquefied petroleum gas from a supplier for use in motor vehicles and, in the case of gasoline, diesel fuel, methanol or liquefied petroleum gas, receives delivery of that product into a storage tank of at least 550-gallon capacity substantially under the control of that organization.

(p)—(q) [Reserved]

(r) *Importer* means a person who imports gasoline, gasoline blending stocks or components, or diesel fuel from a foreign country into the United States (including the Commonwealth of Puerto Rico, the Virgin Islands, Guam, American Samoa, and the Northern Mariana Islands).

(s) *Gasoline blending stock or component* means any liquid compound which is blended with other liquid compounds or with lead additives to produce gasoline.

(t) *Carrier* means any distributor who transports or stores or causes the transportation or storage of gasoline or diesel fuel without taking title to or otherwise having any ownership of the gasoline or diesel fuel, and without altering either the quality or quantity of the gasoline or diesel fuel.

(u) *Ethanol blending plant* means any refinery at which gasoline is produced solely through the addition of ethanol to gasoline, and at which the quality or quantity of gasoline is not altered in any other manner.

(v) *Ethanol blender* means any person who owns, leases, operates, controls, or supervises an ethanol blending plant.

(w) *Cetane index* or ''Calculated cetane index'' is a number representing the ignition properties of diesel fuel oils from API gravity and mid-boiling point as determined by ASTM standard method D 976–80, entitled ''Standard Methods for Calculated Cetane Index of Distillate Fuels''. ASTM test method D 976–80 is incorporated by reference. This incorporation by reference was approved by the Director of the Federal

[1] *State* means a State, the District of Columbia, the Commonwealth of Puerto Rico, the Virgin Islands, Guam, and American Samoa.

Register in accordance with 5 U.S.C. 552(a) and 1 CFR part 51. A copy may be obtained from the American Society for Testing and Materials, 1916 Race Street, Philadelphia, PA 19103. A copy may be inspected at the Air Docket Section (A–130), Room M–1500, U.S. Environmental Protection Agency, Docket No. A–86–03, 401 M Street SW., Washington, DC 20460 or at the Office of the Federal Register, 800 North Capitol Street, NW., suite 700, Washington, DC.

(x) *Diesel fuel* means any fuel sold in any State and suitable for use in diesel motor vehicles and diesel motor vehicle engines, and which is commonly or commercially known or sold as diesel fuel.

(y) *Sulfur percentage* is the percentage of sulfur as determined by ASTM standard test method D 2622–87, entitled ''Standard Test Method for Sulfur in Petroleum Products by X-Ray Spectrometry''. ASTM test method D 2622–87 is incorporated by reference. This incorporation by reference was approved by the Director of the Federal Register in accordance with 5 U.S.C. 552(a) and 1 CFR part 51. A copy may be obtained from the American Society for Testing and Materials, 1916 Race Street, Philadelphia, PA 19103. A copy may be inspected at the Air Docket Section (A–130), room M–1500, U.S. Environmental Protection Agency, Docket No. A–86–03, 401 M Street SW., Washington DC 20460 or at the Office of the Federal Register, 800 North Capitol Street, NW., suite 700, Washington, DC.

(z) *Aromatic content* is the aromatic hydrocarbon content in volume percent as determined by ASTM standard test method D 1319–88, entitled ''Standard Test Method for Hydrocarbon Types in Liquid Petroleum Products by Fluorescent Indicator Adsorption''. ASTM test method D 1319–88 is incorporated by reference. This incorporation by reference was approved by the Director of the Federal Register in accordance with 5 U.S.C. 552(a) and 1 CFR part 51. A copy may be obtained from the American Society for Testing and Materials, 1916 Race Street, Philadelphia, PA 19103. A copy may be inspected at the Air Docket Section (A–130), room M–1500, U.S. Environmental Protection Agency, Docket No. A–86–03, 401 M Street SW., Washington, DC 20460 or at the Office of the Federal Register, 800 North Capitol Street, NW., suite 700, Washington, DC.

(aa) *Small refinery* means a domestic diesel fuel refinery

(1) Which has a crude oil or bonafide feedstock capacity of 50,000 barrels per day or less, and

(2) Which is not owned or controlled by any refiner with a total combined crude oil or bonafide feedstock capacity greater than 137,500 barrels per day.

The above capacities shall be measured in terms of the average of the actual daily utilization rates of the affected refiners or refineries during the period January 1, 1988 to December 31, 1990. These averages will be calculated as barrels per calendar day.

(bb) [Reserved]

(cc) *Designated Volatility Nonattainment Area* means any area designated as being in nonattainment with the National Ambient Air Quality Standard for ozone pursuant to rulemaking under section 107(d)(4)(A)(ii) of the Clean Air Act.

(dd) *Designated Volatility Attainment Area* means an area not designated as being in nonattainment with the National Ambient Air Quality Standard for ozone pursuant to rulemaking under section 107(d)(4)(A)(ii) of the Clean Air Act.

(ee) *Reformulated gasoline* means any gasoline whose formulation has been certified under § 80.40, which meets each of the standards and requirements prescribed under § 80.41, and which contains less than the maximum concentration of the marker specified in § 80.82 that is allowed for reformulated gasoline under § 80.82.

(ff) *Conventional gasoline* means any gasoline which has not been certified under § 80.40.

(gg) *Batch of reformulated gasoline* means a quantity of reformulated gasoline which is homogeneous with regard to those properties which are specified for reformulated gasoline certification.

(hh) *Covered area* means each of the geographic areas specified in § 80.70 in which only reformulated gasoline may be sold or dispensed to ultimate consumers.

(ii) *Reformulated gasoline credit* means the unit of measure for the paper transfer of oxygen or benzene content

resulting from reformulated gasoline which contains more than 2.1 weight percent of oxygen or less than 0.95 volume percent benzene.

(jj) *Oxygenate* means any substance which, when added to gasoline, increases the oxygen content of that gasoline. Lawful use of any of the substances or any combination of these substances requires that they be ''substantially similar'' under section 211(f)(1) of the Clean Air Act, or be permitted under a waiver granted by the Administrator under the authority of section 211(f)(4) of the Clean Air Act.

(kk) *Reformulated gasoline blendstock for oxygenate blending, or RBOB* means a petroleum product which, when blended with a specified type and percentage of oxygenate, meets the definition of reformulated gasoline, and to which the specified type and percentage of oxygenate is added other than by the refiner or importer of the RBOB at the refinery or import facility where the RBOB is produced or imported.

(ll) *Oxygenate blending facility* means any facility (including a truck) at which oxygenate is added to gasoline or blendstock, and at which the quality or quantity of gasoline is not altered in any other manner except for the addition of deposit control additives.

(mm) *Oxygenate blender* means any person who owns, leases, operates, controls, or supervises an oxygenate blending facility, or who owns or controls the blendstock or gasoline used or the gasoline produced at an oxygenate blending facility.

(nn) *Oxygenated fuels program reformulated gasoline, or OPRG* means reformulated gasoline which is intended for use in an oxygenated fuels program control area, as defined at paragraph (pp) of this section, during an oxygenated fuels program control period, as defined at paragraph (qq) of this section.

(oo) *Liquefied petroleum gas* means a liquid hydrocarbon fuel that is stored under pressure and is composed primarily of species that are gases at atmospheric conditions (temperature = 25°C and pressure = 1 atm), excluding natural gas.

(pp) *Control area* means a geographic area in which only oxygenated gasoline under the oxygenated gasoline program may be sold or dispensed, with boundaries determined by section 211(m) of the Act.

(qq) *Control period* means the period during which oxygenated gasoline must be sold or dispensed in any control area, pursuant to section 211(m)(2) of the Act.

(rr) *Oxygenated gasoline* means gasoline which contains a measurable amount of oxygenate.

(ss) *Extended non-commingling season* means the period during which oxygenates which demonstrate commingling-related increases in Reid Vapor Pressure (RVP) will not be permitted to receive credit toward the renewable oxygenate requirements of § 80.83. Any extended non-commingling season is limited to that period of time determined by the Administrator pursuant to § 80.83(i).

(tt) *Natural gas* means a fuel whose primary constituent is methane.

(uu) *Methanol* means any fuel sold for use in motor vehicles and commonly known or commercially sold as methanol or MXX, where XX is the percent methanol (CH_3OH) by volume.

(vv) *Opt-in area.* An area which becomes a covered area under § 80.70 pursuant to section 211(k)(6) of the Clean Air Act.

(Sec. 211, (Sec. 223, Pub. L. 95-95, 91 Stat. 764, 42 U.S.C. 7545(g)) and sec. 301(a) 42 U.S.C. 7602(a), formerly 42 U.S.C. 1857g(a)) of the Clean Air Act, as amended)

[38 FR 1255, Jan. 10, 1973, as amended at 38 FR 33741, Dec. 6, 1973; 39 FR 43283, Dec. 12, 1974; 44 FR 46277, Aug. 7, 1979; 47 FR 49331, Oct. 29, 1982; 48 FR 4287, Jan. 31, 1983; 50 FR 9397, Mar. 7, 1985; 54 FR 11883, Mar. 22, 1989; 55 FR 34137, Aug. 21, 1990; 56 FR 13768, Apr. 4, 1991; 56 FR 64710, Dec. 12, 1991; 57 FR 19537, May 7, 1992; 57 FR 47771, Oct. 20, 1992; 59 FR 7812, Feb. 16, 1994; 59 FR 39289, Aug. 2, 1994; 59 FR 48489, Sept. 21, 1994; 59 FR 60715, Nov. 28, 1994; 61 FR 3837, Feb. 2, 1996; 61 FR 35680, July 8, 1996]

EFFECTIVE DATE NOTE: At 59 FR 39289, Aug. 2, 1994, § 80.2 was amended by adding paragraph (ss) effective September 1, 1994. At 59 FR 60715, Nov. 28, 1994, the amendment was stayed effective September 13, 1994.

§ 80.3 Test methods.

The lead and phosphorus content of gasoline shall be determined in accordance with test methods set forth in the appendices to this part.

[47 FR 765, Jan. 7, 1982]

§80.4 Right of entry; tests and inspections.

The Administrator or his authorized representative, upon presentation of appropriate credentials, shall have a right to enter upon or through any refinery, retail outlet, wholesale purchaser-consumer facility, or detergent manufacturer facility; or the premises or property of any gasoline or detergent distributor, carrier, or importer; or any place where gasoline or detergent is stored; and shall have the right to make inspections, take samples, obtain information and records, and conduct tests to determine compliance with the requirements of this part.

[61 FR 35356, July 5, 1996]

§80.5 Penalties.

Any person who violates these regulations shall be liable to the United States for a civil penalty of not more than the sum of $25,000 for every day of such violation and the amount of economic benefit or savings resulting from the violation. Any violation with respect to a regulation proscribed under section 211(c), (k), (l) or (m) of the Act which establishes a regulatory standard based upon a multi-day averaging period shall constitute a separate day of violation for each and every day in the averaging period. Civil penalties shall be assessed in accordance with section 205(b) and (c) of the Act.

[58 FR 65554, Dec. 15, 1993]

§80.7 Requests for information.

(a) When the Administrator, the Regional Administrator, or their delegates have reason to believe that a violation of section 211(c) or section 211(n) of the Act and the regulations thereunder has occurred, they may require any refiner, distributor, wholesale purchaser-consumer, or retailer to report the following information regarding receipt, transfer, delivery, or sale of gasoline represented to be unleaded gasoline and to allow the reproduction of such information at all reasonable times.

(1) For any bulk shipment of gasoline represented to be unleaded gasoline which is transferred, sold, or delivered within the previous 6 months by a refiner or a distributor to a distributor, wholesale purchaser-consumer or a retail outlet, the refiner or distributor shall maintain and provide the following information as applicable:

(i) Business or corporate name and address of distributors, wholesale purchaser-consumers or retail outlets to which the gasoline has been transferred, sold, or delivered.

(ii) Quantity of gasoline involved.

(iii) Date of delivery.

(iv) Storage location of gasoline prior to transit via delivery vessel (e.g., location of a bulk terminal).

(v) Business or corporate name and address of the person who delivered the gasoline.

(vi) Identification of delivery vessel (e.g., truck number). This information shall be supplied by the person in paragraph (a)(1)(v) of this section who performed the delivery, e.g., common or contract carrier.

(2) For any bulk shipment of gasoline represented to be unleaded gasoline received by a retail outlet or a wholesale-purchaser-consumer facility within the previous 6 months, whether by purchase or otherwise, the retailer or wholesale purchaser-consumer shall maintain accessibility to and provide the following information:

(i) Business or corporate name and address of the distributor.

(ii) Quantity of gasoline received.

(iii) Date of receipt.

(b) Upon request by the Administrator, the Regional Administrator, or their delegates, any retailer shall provide documentation of his annual total sales volume in gallons of gasoline for each retail outlet for each calendar year beginning with 1971.

(c) Any refiner, distributor, wholesale purchaser-consumer, retailer, or importer shall provide such other information as the Administrator or his authorized representative may reasonably require to enable him to determine whether such refiner, distributor, wholesale purchaser-consumer, retailer, or importer has acted or is acting in compliance with sections 211(c) and 211(n) of the Act and the regulations thereunder and shall, upon request of the Administrator or his authorized representative, produce and allow reproduction of any relevant records at all reasonable times. Such

information may include but is not limited to records of unleaded gasoline inventory at a wholesale purchaser-consumer facility or a retail outlet, unleaded pump meter readings at a wholesale purchaser-consumer facility or a retail outlet, and receipts providing the date of acquisition of signs, labels, and nozzles required by § 80.22. No person shall be required to furnish information requested under this paragraph if he can establish that such information is not maintained in the normal course of his business.

(Secs. 211, 301, Clean Air Act, as amended (42 U.S.C. 1857f–6c, 1857g))

[40 FR 36336, Aug. 20, 1975, as amended at 42 FR 45307, Sept. 9, 1977; 47 FR 49332, Oct. 29, 1982; 61 FR 3837, Feb. 2, 1996]

Subpart B—Controls and Prohibitions

§§ 80.20—80.21 [Reserved]

§ 80.22 Controls and prohibitions.

(a) After December 31, 1995, no person shall sell, offer for sale, supply, offer for supply, dispense, transport, or introduce into commerce gasoline represented to be unleaded gasoline unless such gasoline meets the defined requirements for unleaded gasoline in § 80.2(g); nor shall he dispense, or cause or allow the gasoline other than unleaded gasoline to be dispensed into any motor vehicle which is equipped with a gasoline tank filler inlet which is designed for the introduction of unleaded gasoline.

(b) After December 31, 1995, no person shall sell, offer for sale, supply, offer for supply, dispense, transport, or introduce into commerce for use as fuel in any motor vehicle (as defined in Section 216(2) of the Clean Air Act, 42 U.S.C. 7550(2)), any gasoline which is produced with the use of lead additives or which contains more than 0.05 gram of lead per gallon.

(c)—(e) [Reserved]

(f) Beginning January 1, 1996, every retailer and wholesale purchaser-consumer shall equip all gasoline pumps as follows:

(1) [Reserved]

(2) Each pump from which unleaded gasoline is dispensed into motor vehicles shall be equipped with a nozzle spout which meets the following specifications:

(i) The outside diameter of the terminal end shall not be greater than 0.840 inch (2.134 centimeters);

(ii) The terminal end shall have a straight section of at least 2.5 inches (6.34 centimeters) in length; and

(iii) The retaining spring shall terminate 3.0 inches (7.6 centimeters) from the terminal end.

(g)—(i) Reserved

(j) After July 1, 1996 every retailer and wholesale purchaser-consumer handling over 10,000 gallons (37,854 liters) of fuel per month shall limit each nozzle from which gasoline or methanol is introduced into motor vehicles to a maximum fuel flow rate not to exceed 10 gallons per minute (37.9 liters per minute). The flow rate may be controlled through any means in the pump/dispenser system, provided the nozzle flow rate does not exceed 10 gallons per minute (37.9 liters per minute). After January 1, 1998 this requirement applies to every retailer and wholesale purchaser-consumer. Any dispensing pump that is dedicated exclusively to heavy-duty vehicles, boats, or airplanes is exempt from this requirement.

[38 FR 1255, Jan. 10, 1973, as amended at 39 FR 16125, May 17, 1974; 39 FR 43283, Dec. 12, 1974; 48 FR 4287, Jan. 31, 1983; 56 FR 13768, Apr. 4, 1991; 58 FR 16019, Mar. 24, 1993; 61 FR 3837, Feb. 2, 1996; 61 FR 33039, June 26, 1996]

§ 80.23 Liability for violations.

Liability for violations of paragraphs (a) and (b) of § 80.22 shall be determined as follows:

(a)(1) Where the corporate, trade, or brand name of a gasoline refiner or any of its marketing subsidiaries appears on the pump stand or is displayed at the retail outlet or wholesale purchaser-consumer facility from which the gasoline was sold, dispensed, or offered for sale, the retailer or wholesale purchaser-consumer, the reseller (if any), and such gasoline refiner shall be deemed in violation. Except as provided in paragraph (b)(2) of this section, the refiner shall be deemed in violation irrespective of whether any other refiner, distributor, retailer, or wholesale purchaser-consumer or the

employee or agent of any refiner, distributor, retailer, or wholesale purchaser-consumer may have caused or permitted the violation.

(2) Where the corporate, trade, or brand name of a gasoline refiner or any of its marketing subsidiaries does not appear on the pump stand and is not displayed at the retail outlet or wholesale purchaser-consumer facility from which the gasoline was sold, dispensed, or offered for sale, the retailer or wholesale purchaser-consumer and any distributor who sold that person gasoline contained in the storage tank which supplied that pump at the time of the violation shall be deemed in violation.

(b)(1) In any case in which a retailer or wholesale purchaser-consumer and any gasoline refiner or distributor would be in violation under paragraph (a) (1) or (2) of this section, the retailer or wholesale purchaser-consumer shall not be liable if he can demonstrate that the violation was not caused by him or his employee or agent.

(2) In any case in which a retailer or wholesale purchaser-consumer, a reseller (if any), and any gasoline refiner would be in violation under paragraph (a)(1) of this section, the refiner shall not be deemed in violation if he can demonstrate:

(i) That the violation was not caused by him or his employee or agent, and

(ii) That the violation was caused by an act in violation of law (other than the Act or this part), or an act of sabotage, vandalism, or deliberate commingling of gasoline which is produced with the use of lead additives or phosphorus additives with unleaded gasoline, whether or not such acts are violations of law in the jurisdiction where the violation of the requirements of this part occurred, or

(iii) That the violation was caused by the action of a reseller or a retailer supplied by such reseller, in violation of a contractual undertaking imposed by the refiner on such reseller designed to prevent such action, and despite reasonable efforts by the refiner (such as periodic sampling) to insure compliance with such contractual obligation, or

(iv) That the violation was caused by the action of a retailer who is supplied directly by the refiner (and not by a reseller), in violation of a contractual undertaking imposed by the refiner on such retailer designed to prevent such action, and despite reasonable efforts by the refiner (such as periodic sampling) to insure compliance with such contractual obligation, or

(v) That the violation was caused by the action of a distributor subject to a contract with the refiner for transportation of gasoline from a terminal to a distributor, retailer or wholesale purchaser-consumer, in violation of a contractual undertaking imposed by the refiner on such distributor designed to prevent such action, and despite reasonable efforts by the refiner (such as periodic sampling) to insure compliance with such contractual obligation, or

(vi) That the violation was caused by a distributor (such as a common carrier) not subject to a contract with the refiner but engaged by him for transportation of gasoline from a terminal to a distributor, retailer or wholesale purchaser-consumer, despite reasonable efforts by the refiner (such as specification or inspection of equipment) to prevent such action, or

(vii) That the violation occurred at a wholesale purchaser-consumer facility: *Provided, however,* That if such wholesale purchaser-consumer was supplied by a reseller, the refiner must demonstrate that the violation could not have been prevented by such reseller's compliance with a contractual undertaking imposed by the refiner on such reseller as provided in paragraph (b)(2)(iii) of this section.

(viii) In paragraphs (b)(2)(ii) through (vi) hereof, the term ''was caused'' means that the refiner must demonstrate by reasonably specific showings by direct or circumstantial evidence that the violation was caused or must have been caused by another.

(c) In any case in which a retailer or wholesale purchaser-consumer, a reseller, and any gasoline refiner would be in violation under paragraph (a)(1) of this section, the reseller shall not be deemed in violation if he can demonstrate that the violation was not caused by him or his employee or agent.

(d) In any case in which a retailer or wholesale purchaser-consumer and any gasoline distributor would be in violation under paragraph (a)(2) of this section, the distributor will not be deemed in violation if he can demonstrate that the violation was not caused by him or his employee or agent.

(e)(1) In any case in which a retailer or his employee or agent or a wholesale purchase-consumer or his employee or agent introduced gasoline other than unleaded gasoline into a motor vehicle which is equipped with a gasoline tank filler inlet designed for the introduction of unleaded gasoline, only the retailer or wholesale purchaser-consumer shall be deemed in violation.

(2) [Reserved]

(Secs. 211, 301 of the Clean Air Act, as amended (42 U.S.C. 1857f–6c, 1857g))

[38 FR 1255, Jan. 10, 1973, as amended at 39 FR 42360, Dec. 5, 1974; 39 FR 43284, Dec. 12, 1974; 42 FR 45307, Sept. 9, 1977; 61 FR 3837, Feb. 2, 1996]

§ 80.24 Controls applicable to motor vehicle manufacturers.

(a) [Reserved]

(b) The manufacturer of any motor vehicle equipped with an emission control device which the Administrator has determined will be significantly impaired by the use of gasoline other than unleaded gasoline shall manufacture such vehicle with each gasoline tank filler inlet having a restriction which prevents the insertion of a nozzle with a spout having a terminal end with an outside diameter of 0.930 inch (2.363 centimeters) or more and allows the insertion of a nozzle with a spout meeting the specifications of § 80.22(f)(2).

[38 FR 26450, Sept. 21, 1973, as amended at 39 FR 34538, Sept. 26, 1974; 46 FR 50472, Oct. 13, 1981; 48 FR 29692, June 28, 1983; 51 FR 33731, Sept. 22, 1986; 61 FR 3838, Feb. 2, 1996; 61 FR 8221, Mar. 4, 1996; 61 FR 28766, June 6, 1996]

§ 80.25 [Reserved]

§ 80.26 Confidentiality of information.

Information obtained by the Administrator or his representatives pursuant to this part shall be treated, in so far as its confidentiality is concerned, in accordance with the provisions of 40 CFR part 2.

[38 FR 33741, Dec. 6, 1973]

§ 80.27 Controls and prohibitions on gasoline volatility.

(a)(1) *Prohibited activities in 1991.* During the 1991 regulatory control periods, no refiner, importer, distributor, reseller, carrier, retailer or wholesale purchaser-consumer shall sell, offer for sale, dispense, supply, offer for supply, or transport gasoline whose Reid vapor pressure exceeds the applicable standard. As used in this section and § 80.28, ''applicable standard'' means the standard listed in this paragraph for the geographical area and time period in which the gasoline is intended to be dispensed to motor vehicles or, if such area and time period cannot be determined, the standard listed in this paragraph that specifies the lowest Reid vapor pressure for the year in which the gasoline is being sampled. As used in this section and § 80.28, ''regulatory control periods'' mean June 1 to September 15 for retail outlets and wholesale purchaser-consumers and May 1 to September 15 for all other facilities.

APPLICABLE STANDARDS [1]

State	May	June	July	Aug.	Sept.
Alabama	10.5	10.5	9.5	9.5	10.5
Arizona:					
North of 34 degrees latitude and east of 111 degrees longitude	9.5	9.0	9.0	9.5	9.5
All areas except North of 34 degrees latitude and east of 111 degrees longitude	9.5	9.0	9.0	9.0	9.5
Arkansas	10.5	10.5	9.5	9.5	10.5
California: [2]					
North Coast	10.5	9.5	9.5	9.5	9.5
South Coast	9.5	9.5	9.5	9.5	9.5
Southeast	9.5	9.5	9.5	9.5	9.5
Interior	9.5	9.5	9.5	9.5	9.5

APPLICABLE STANDARDS [1]—Continued

State	May	June	July	Aug.	Sept.
Colorado	10.5	9.5	9.5	9.5	9.5
Connecticut	10.5	10.5	10.5	10.5	10.5
Delaware	10.5	10.5	10.5	10.5	10.5
District of Columbia	10.5	10.5	10.5	10.5	10.5
Florida	10.5	10.5	10.5	10.5	10.5
Georgia	10.5	10.5	9.5	9.5	10.5
Idaho	10.5	10.5	10.5	10.5	10.5
Illinois:					
North of 40° Latitude	10.5	10.5	10.5	10.5	10.5
South of 40° Latitude	10.5	10.5	9.5	9.5	10.5
Indiana	10.5	10.5	10.5	10.5	10.5
Iowa	10.5	10.5	10.5	10.5	10.5
Kansas	10.5	10.5	9.5	9.5	10.5
Kentucky	10.5	10.5	10.5	10.5	10.5
Louisiana	10.5	10.5	9.5	9.5	10.5
Maine	10.5	10.5	10.5	10.5	10.5
Maryland	10.5	10.5	10.5	10.5	10.5
Massachusetts	10.5	10.5	10.5	10.5	10.5
Michigan	10.5	10.5	10.5	10.5	10.5
Minnesota	10.5	10.5	10.5	10.5	10.5
Mississippi	10.5	10.5	9.5	9.5	10.5
Missouri	10.5	10.5	9.5	9.5	10.5
Montana	10.5	10.5	10.5	10.5	10.5
Nebraska	10.5	10.5	10.5	10.5	10.5
Nevada:					
North of 38° Latitude	10.5	9.5	9.5	9.5	9.5
South of 38° Latitude	9.5	9.5	9.5	9.5	9.5
New Hampshire	10.5	10.5	10.5	10.5	10.5
New Jersey	10.5	10.5	10.5	10.5	10.5
New Mexico:					
North of 34° Latitude	9.5	9.0	9.0	9.5	9.5
South of 34° Latitude	9.5	9.0	9.0	9.0	9.5
New York	10.5	10.5	10.5	10.5	10.5
North Carolina	10.5	10.5	9.5	9.5	10.5
North Dakota	10.5	10.5	10.5	10.5	10.5
Ohio	10.5	10.5	10.5	10.5	10.5
Oklahoma	10.5	9.5	9.5	9.5	9.5
Oregon:					
East of 122° Longitude	10.5	10.5	10.5	10.5	10.5
West of 122° Longitude	10.5	10.5	10.5	10.5	10.5
Pennsylvania	10.5	10.5	10.5	10.5	10.5
Rhode Island	10.5	10.5	10.5	10.5	10.5
South Carolina	10.5	10.5	9.5	9.5	10.5
South Dakota	10.5	10.5	10.5	10.5	10.5
Tennessee	10.5	10.5	9.5	9.5	10.5
Texas:					
East of 99° Longitude	9.5	9.0	9.0	9.0	9.5
West of 99° Longitude	9.5	9.0	9.0	9.0	9.5
Utah	10.5	9.5	9.5	9.5	9.5
Vermont	10.5	10.5	10.5	10.5	10.5
Virginia	10.5	10.5	10.5	10.5	10.5
Washington:					
East of 122° Longitude	10.5	10.5	10.5	10.5	10.5
West of 122° Longitude	10.5	10.5	10.5	10.5	10.5
West Virginia	10.5	10.5	10.5	10.5	10.5
Wisconsin	10.5	10.5	10.5	10.5	10.5
Wyoming	10.5	10.5	10.5	10.5	10.5

[1] Standards are expressed in pounds per square inch (psi).

[2] California areas include the following counties:

North Coast—Alameda, Contra Costa, Del Norte, Humbolt, Lake, Marin, Mendocino, Monterey, Napa, San Benito, San Francisco, San Mateo, Santa Clara, Santa Cruz, Solano, Sonoma, and Trinity.

Interior—Lassen, Modoc, Plumas, Sierra, Siskiyou, Alpine, Amador, Butte, Calaveras, Colusa, El Dorado, Fresno, Glenn, Kern (except that portion lying east of the Los Angeles County Aqueduct), Kings, Madera, Mariposa, Merced, Placer, Sacramento, San Joaquin, Shasta, Stanislaus, Sutter, Tehama, Tulare, Tuolumne, Yolo, Yuba, and Nevada.

South Coast—Orange, San Diego, San Luis Obispo, Santa Barbara, Ventura, and Los Angeles (except that portion north of the San Gabriel mountain range and east of the Los Angeles County Aqueduct).

Southeast—Imperial, Riverside, San Bernardino, Los Angeles (that portion north of the San Gabriel mountain range and east of the Los Angeles County Aqueduct), Mono, Inyo, and Kern (that portion lying east of the Los Angeles County Aqueduct).

(2) *Prohibited activities in 1992 and beyond.* During the 1992 and later high ozone seasons no person, including without limitation, no retailer or wholesale purchaser-consumer, and during the 1992 and later regulatory control periods, no refiner, importer, distributor, reseller, or carrier shall sell, offer for sale, dispense, supply, offer for supply, transport or introduce into commerce gasoline whose Reid vapor pressure exceeds the applicable standard. As used in this section and § 80.28, ''applicable standard'' means:

(i) 9.0 psi for all designated volatility attainment areas; and

(ii) The standard listed in this paragraph for the state and time period in which the gasoline is intended to be dispensed to motor vehicles for any designated volatility nonattainment area within such State or, if such area and time period cannot be determined, the standard listed in this paragraph that specifies the lowest Reid vapor pressure for the year in which the gasoline is sampled. Designated volatility attainment and designated volatility nonattainment areas and their exact boundaries are described in 40 CFR part 81, or such part as shall later be designated for that purpose. As used in this section and § 80.27, ''high ozone season'' means the period from June 1 to September 15 of any calendar year and ''regulatory control period'' means the period from May 1 to September 15 of any calendar year.

APPLICABLE STANDARDS [1] 1992 AND SUBSEQUENT YEARS

State	May	June	July	August	September
Alabama	9.0	7.8	7.8	7.8	7.8
Arizona	9.0	7.8	7.8	7.8	7.8
Arkansas	9.0	7.8	7.8	7.8	7.8
California	9.0	7.8	7.8	7.8	7.8
Colorado [2]	9.0	7.8	7.8	7.8	7.8
Connecticut	9.0	9.0	9.0	9.0	9.0
Delaware	9.0	9.0	9.0	9.0	9.0
District of Columbia	9.0	7.8	7.8	7.8	7.8
Florida	9.0	7.8	7.8	7.8	7.8
Georgia	9.0	7.8	7.8	7.8	7.8
Idaho	9.0	9.0	9.0	9.0	9.0
Illinois	9.0	9.0	9.0	9.0	9.0
Indiana	9.0	9.0	9.0	9.0	9.0
Iowa	9.0	9.0	9.0	9.0	9.0
Kansas	9.0	7.8	7.8	7.8	7.8
Kentucky	9.0	9.0	9.0	9.0	9.0
Louisiana	9.0	7.8	7.8	7.8	7.8
Maine	9.0	9.0	9.0	9.0	9.0
Maryland	9.0	7.8	7.8	7.8	7.8
Massachusetts	9.0	9.0	9.0	9.0	9.0
Michigan	9.0	9.0	9.0	9.0	9.0
Minnesota	9.0	9.0	9.0	9.0	9.0
Mississippi	9.0	7.8	7.8	7.8	7.8
Missouri	9.0	7.8	7.8	7.8	7.8
Montana	9.0	9.0	9.0	9.0	9.0
Nebraska	9.0	9.0	9.0	9.0	9.0
Nevada	9.0	7.8	7.8	7.8	7.8
New Hampshire	9.0	9.0	9.0	9.0	9.0
New Jersey	9.0	9.0	9.0	9.0	9.0
New Mexico	9.0	7.8	7.8	7.8	7.8
New York	9.0	9.0	9.0	9.0	9.0
North Carolina	9.0	7.8	7.8	7.8	7.8
North Dakota	9.0	9.0	9.0	9.0	9.0
Ohio	9.0	9.0	9.0	9.0	9.0
Oklahoma	9.0	7.8	7.8	7.8	7.8
Oregon	9.0	7.8	7.8	7.8	7.8
Pennsylvania	9.0	9.0	9.0	9.0	9.0
Rhode Island	9.0	9.0	9.0	9.0	9.0
South Carolina [3]	9.0	9.0	9.0	9.0	9.0
South Dakota	9.0	9.0	9.0	9.0	9.0
Tennessee:.					
Knox County	9.0	9.0	9.0	9.0	9.0
All other volatility nonattainment areas	9.0	7.8	7.8	7.8	7.8
Texas	9.0	7.8	7.8	7.8	7.8
Utah	9.0	7.8	7.8	7.8	7.8
Vermont	9.0	9.0	9.0	9.0	9.0
Virginia	9.0	7.8	7.8	7.8	7.8

APPLICABLE STANDARDS[1] 1992 AND SUBSEQUENT YEARS—Continued

State	May	June	July	August	September
Washington	9.0	9.0	9.0	9.0	9.0
West Virginia	9.0	9.0	9.0	9.0	9.0
Wisconsin	9.0	9.0	9.0	9.0	9.0
Wyoming	9.0	9.0	9.0	9.0	9.0

[1] Standards are expressed in pounds per square inch (psi).
[2] The standard for 1992 through 1997 in the Denver-Boulder nonattainment area will be 9.0 for June 1 through September 15.
[3] The standard for nonattainment areas in South Carolina from June 1 until September 15 in 1992 and 1993 was 7.8 psi.

(b) *Determination of compliance.* Compliance with the standards listed in paragraph (a) of this section shall be determined by use of one of the sampling methodologies as specified in appendix D of this part and the testing methodology specified in appendix E of this part.

(c) *Liability.* Liability for violations of paragraph (a) of this section shall be determined according to the provisions of § 80.28. Where the terms refiner, importer, distributor, reseller, carrier, ethanol blender, retailer, or wholesale purchaser-consumer are expressed in the singular in § 80.28, these terms shall include the plural.

(d) *Special provisions for alcohol blends.* (1) Any gasoline which meets the requirements of paragraph (d)(2) of this section shall not be in violation of this section if its Reid vapor pressure does not exceed the applicable standard in paragraph (a) of this section by more than one pound per square inch (1.0 psi).

(2) In order to qualify for the special regulatory treatment specified in paragraph (d)(1) of this section, gasoline must contain denatured, anhydrous ethanol. The concentration of the ethanol, excluding the required denaturing agent, must be at least 9% and no more than 10% (by volume) of the gasoline. The ethanol content of the gasoline shall be determined by use of one of the testing methodologies specified in appendix F to this part. The maximum ethanol content of gasoline shall not exceed any applicable waiver conditions under section 211(f)(4) of the Clean Air Act.

(3) Each invoice, loading ticket, bill of lading, delivery ticket and other document which accompanies a shipment of gasoline containing ethanol shall contain a legible and conspicuous statement that the gasoline being shipped contains ethanol and the percentage concentration of ethanol.

(e) *Testing exemptions.* (1)(i) Any person may request a testing exemption by submitting an application that includes all the information listed in paragraphs (e)(3), (4), (5) and (6) of this section to:

Director (6406J), Field Operations and Support Division, U.S. Environmental Protection Agency, 401 M Street, SW., Washington, DC 20460

(ii) For purposes of this section, ''testing exemption'' means an exemption from the requirements of § 80.27(a) that is granted by the Administrator for the purpose of research or emissions certification.

(2)(i) In order for a testing exemption to be granted, the applicant must demonstrate the following:

(A) The proposed test program has a purpose that constitutes an appropriate basis for exemption;

(B) The proposed test program necessitates the granting of an exemption;

(C) The proposed test program exhibits reasonableness in scope; and

(D) The proposed test program exhibits a degree of control consistent with the purpose of the program and the Environmental Protection Agency's (EPA's) monitoring requirements.

(ii) Paragraphs (e)(3), (4), (5) and (6) of this section describe what constitutes a sufficient demonstration for each of the four elements in paragraphs (e)(2)(i) (A) through (D) of this section.

(3) An appropriate purpose is limited to research or emissions certification. The testing exemption application must include a concise statement of the purpose(s) of the testing program.

(4) With respect to the necessity that an exemption be granted, the applicant must demonstrate an inability to achieve the stated purpose in a practicable manner, during a period of the

year in which the volatility regulations do not apply, or without performing or causing to be performed one or more of the prohibited activities under § 80.27(a). If any site of the proposed test program is located in an area that has been classified by the Administrator as a nonattainment area for purposes of the ozone national ambient air quality standard, the application must also demonstrate an inability to perform the test program in an area that is not so classified.

(5) With respect to reasonableness, a test program must exhibit a duration of reasonable length, effect a reasonable number of vehicles or engines, and utilize a reasonable amount of high volatility fuel. In this regard, the testing exemption application must include:

(i) An estimate of the program's duration;

(ii) An estimate of the maximum number of vehicles or engines involved in the test program;

(iii) The time or mileage duration of the test program;

(iv) The range of volatility of the fuel (expressed in Reid Vapor Pressure (RVP)) expected to be used in the test program; and

(v) The quantity of fuel which exceeds the applicable standard that is expected to be used in the test program.

(6) With respect to control, a test program must be capable of affording EPA a monitoring capability. At a minimum, the testing exemption application must also include:

(i) The technical nature of the test program;

(ii) The site(s) of the test program (including the street address, city, county, state, and zip code);

(iii) The manner in which information on vehicles and engines used in the test program will be recorded and made available to the Administrator;

(iv) The manner in which results of the test program will be recorded and made available to the Administrator;

(v) The manner in which information on the fuel used in the test program (including RVP level(s), name, address, telephone number, and contact person of supplier, quantity, date received from the supplier) will be recorded and made available to the Administrator;

(vi) The manner in which the distribution pumps will be labeled to insure proper use of the test fuel;

(vii) The name, address, telephone number and title of the person(s) in the organization requesting a testing exemption from whom further information on the request may be obtained; and

(viii) The name, address, telephone number and title of the person(s) in the organization requesting a testing exemption who will be responsible for recording and making available to the Administrator the information specified in paragraphs (e)(6)(iii), (iv), and (v) of this section, and the location in which such information will be maintained.

(7) A testing exemption will be granted by the Administrator upon a demonstration that the requirements of paragraphs (e)(2), (3), (4), (5) and (6) of this section have been met. The testing exemption will be granted in the form of a memorandum of exemption signed by the applicant and the Administrator (or his delegate), which shall include such terms and conditions as the Administrator determines necessary to monitor the exemption and to carry out the purposes of this section. Any violation of such a term or condition shall cause the exemption to be void.

[54 FR 11883, Mar. 22, 1989; 54 FR 27017, June 27, 1989, as amended at 54 FR 33219, Aug. 14, 1989; 55 FR 32666, June 11, 1990; 56 FR 20548, May 6, 1991; 56 FR 37022, Aug. 2, 1991; 56 FR 64710, Dec. 12, 1991; 57 FR 20205, May 12, 1992; 58 FR 34370, June 25, 1993; 58 FR 14484, Mar. 17, 1993; 58 FR 26069, Apr. 30, 1993; 58 FR 46511, Sept. 1, 1993; 59 FR 15629, 15633, Apr. 4, 1994; 61 FR 16396, Apr. 15, 1996]

§ 80.28 Liability for violations of gasoline volatility controls and prohibitions.

(a) *Violations at refineries or importer facilities.* Where a violation of the applicable standard set forth in § 80.27 is detected at a refinery that is not an ethanol blending plant or at an importer's facility, the refiner or importer shall be deemed in violation.

(b) *Violations at carrier facilities.* Where a violation of the applicable standard set forth in § 80.27 is detected at a carrier's facility, whether in a

transport vehicle, in a storage facility, or elsewhere at the facility, the following parties shall be deemed in violation:

(1) The carrier, except as provided in paragraph (g)(1) of this section;

(2) The refiner (if he is not an ethanol blender) at whose refinery the gasoline was produced or the importer at whose import facility the gasoline was imported, except as provided in paragraph (g)(2) of this section;

(3) The ethanol blender (if any) at whose ethanol blending plant the gasoline was produced, except as provided in paragraph (g)(6) of this section; and

(4) The distributor and/or reseller, except as provided in paragraph (g)(3) of this section.

(c) *Violations at branded distributor facilities, reseller facilities, or ethanol blending plants.* Where a violation of the applicable standard set forth in § 80.27 is detected at a distributor facility, a reseller facility, or an ethanol blending plant which is operating under the corporate, trade, or brand name of a gasoline refiner or any of its marketing subsidiaries, the following parties shall be deemed in violation:

(1) The distributor or reseller, except as provided in paragraph (g)(3) or (g)(8) of this section;

(2) The carrier (if any), if the carrier caused the gasoline to violate the applicable standard;

(3) The refiner under whose corporate, trade, or brand name (or that of any of its marketing subsidiaries) the distributor, reseller, or ethanol blender is operating, except as provided in paragraph (g)(4) of this section; and

(4) The ethanol blender (if any) at whose ethanol blending plant the gasoline was produced, except as provided in paragraph (g)(6) or (g)(8) of this section.

(d) *Violations at unbranded distributor facilities or ethanol blending plants.* Where a violation of the applicable standard set forth in § 80.27 is detected at a distributor facility or an ethanol blending plant not operating under a refiner's corporate, trade, or brand name, or that of any of its marketing subsidiaries, the following parties shall be deemcd in violation:

(1) The distributor, except as provided in paragraph (g)(3) or (g)(8) of this section;

(2) The carrier (if any), if the carrier caused the gasoline to violate the applicable standard;

(3) The refiner (if he is not an ethanol blender) at whose refinery the gasoline was produced or the importer at whose import facility the gasoline was imported, except as provided in paragraph (g)(2) of this section; and

(4) The ethanol blender (if any) at whose ethanol blending plant the gasoline was produced, except as provided in paragraph (g)(6) or (g)(8) of this section.

(e) *Violations at branded retail outlets or wholesale purchaser-consumer facilities.* Where a violation of the applicable standard set forth in § 80.27 is detected at a retail outlet or at a wholesale purchaser-consumer facility displaying the corporate, trade, or brand name of a gasoline refiner or any of its marketing subsidiaries, the following parties shall be deemed in violation:

(1) The retailer or wholesale purchaser-consumer, except as provided in paragraph (g)(5) or (g)(8) of this section;

(2) The distributor and/or reseller (if any), except as provided in paragraph (g)(3) or (g)(8) of this section;

(3) The carrier (if any), if the carrier caused the gasoline to violate the applicable standard;

(4) The refiner whose corporate, trade, or brand name (or that of any of its marketing subsidiaries) is displayed at the retail outlet or wholesale purchaser-consumer facility, except as provided in paragraph (g)(4) of this section; and

(5) The ethanol blender (if any) at whose ethanol blending plant the gasoline was produced, except as provided in paragraph (g)(6) or (g)(8) of this section.

(f) *Violations at unbranded retail outlets or wholesale purchaser-consumer facilities.* Where a violation of the applicable standard set forth in § 80.27 is detected at a retail outlet or at a wholesale purchaser-consumer facility not displaying the corporate, trade, or brand name of a refiner or any of its marketing subsidiaries, the following parties shall be deemed in violation:

(1) The retailer or wholesale purchaser-consumer, except as provided in paragraph (g)(5) or (g)(8) of this section;

(2) The distributor (if any), except as provided in paragraph (g)(3) or (g)(8) of this section;

(3) The carrier (if any), if the carrier caused the gasoline to violate the applicable standard;

(4) The ethanol blender (if any) at whose ethanol blending plant the gasoline was produced, except as provided in paragraph (g)(6) of this section; and

(5) The refiner (if he is not an ethanol blender) at whose refinery the gasoline was produced and/or the importer at whose import facility the gasoline was imported, except as provided in paragraph (g)(2) of this section.

(g) *Defenses.* (1) In any case in which a carrier would be in violation under paragraph (b)(1) of this section, the carrier shall not be deemed in violation if he can demonstrate:

(i) That the violation was not caused by him or his employee or agent; and

(ii) Evidence of an oversight program conducted by the carrier, such as periodic sampling and testing of incoming gasoline, for monitoring the volatility of gasoline stored or transported by that carrier.

(2) In any case in which a refiner or importer would be in violation under paragraphs (b)(2), (d)(3), or (f)(5) of this section, the refiner or importer shall not be deemed in violation if he can demonstrate:

(i) That the violation was not caused by him or his employee or agent; and

(ii) Test results using the sampling and testing methodologies set forth in appendices D and E of this part, or any other test method where adequate correlation to Method 3 of appendix E of this part is demonstrated, which show evidence that the gasoline determined to be in violation was in compliance with the applicable standard when it was delivered to the next party in the distribution system.

(3) In any case in which a distributor or reseller would be in violation under paragraph (b)(4), (c)(1), (d)(1), (e)(2), or (f)(2) of this section, the distributor or reseller shall not be deemed in violation if he can demonstrate:

(i) That the violation was not caused by him or his employee or agent; and

(ii) Evidence of an oversight program conducted by the distributor or reseller, such as periodic sampling and testing of gasoline, for monitoring the volatility of gasoline that the distributor or reseller sells, supplies, offers for sale or supply, or transports.

(4) In any case in which a refiner would be in violation under paragraphs (c)(3) or (e)(4) of this section, the refiner shall not be deemed in violation if he can demonstrate all of the following:

(i) Test results using the sampling and testing methodologies set forth in appendices D and E of this part, or any other test method where adequate correlation to Method 3 of appendix E of this part is demonstrated, which show evidence that the gasoline determined to be in violation was in compliance with the applicable standard when transported from the refinery.

(ii) That the violation was not caused by him or his employee or agent; and

(iii) That the violation:

(A) Was caused by an act in violation of law (other than the Act or this part), or an act of sabotage or vandalism, whether or not such acts are violations of law in the jurisdiction where the violation of the requirements of this part occurred, or

(B) Was caused by the action of a reseller, an ethanol blender, or a retailer supplied by such reseller or ethanol blender, in violation of a contractual undertaking imposed by the refiner on such reseller or ethanol blender designed to prevent such action, and despite reasonable efforts by the refiner (such as periodic sampling and testing) to insure compliance with such contractual obligation, or

(C) Was caused by the action of a retailer who is supplied directly by the refiner (and not by a reseller), in violation of a contractual undertaking imposed by the refiner on such retailer designed to prevent such action, and despite reasonable efforts by the refiner (such as periodic sampling and testing) to insure compliance with such contractual obligation, or

(D) Was caused by the action of a distributor or an ethanol blender subject

to a contract with the refiner for transportation of gasoline from a terminal to a distributor, ethanol blender, retailer or wholesale purchaser-consumer, in violation of a contractual undertaking imposed by the refiner on such distributor or ethanol blender designed to prevent such action, and despite reasonable efforts by the refiner (such as periodic sampling and testing) to insure compliance with such contractual obligation, or

(E) Was caused by a carrier or other distributor not subject to a contract with the refiner but engaged by him for transportation of gasoline from a terminal to a distributor, ethanol blender, retailer or wholesale purchaser-consumer, despite reasonable efforts by the refiner (such as specification or inspection of equipment) to prevent such action, or

(F) Occurred at a wholesale purchaser-consumer facility: *Provided, however,* That if such wholesale purchaser-consumer was supplied by a reseller or ethanol blender, the refiner must demonstrate that the violation could not have been prevented by such reseller's or ethanol blender's compliance with a contractual undertaking imposed by the refiner on such reseller or ethanol blender as provided in paragraph (g)(4)(iii)(B) of this section.

(iv) In paragraphs (g)(4)(iii)(A) through (E) of this section, the term ''was caused'' means that the refiner must demonstrate by reasonably specific showings, by direct or circumstantial evidence, that the violation was caused or must have been caused by another.

(5) In any case in which a retailer or wholesale purchaser-consumer would be in violation under paragraphs (e)(1) or (f)(1) of this section, the retailer or wholesale purchaser-consumer shall not be deemed in violation if he can demonstrate that the violation was not caused by him or his employee or agent.

(6) In any case in which an ethanol blender would be in violation under paragraphs (b)(3), (c)(4), (d)(4), (e)(5) or (f)(4) of this section, the ethanol blender shall not be deemed in violation if he can demonstrate:

(i) That the violation was not caused by him or his employee or agent; and

(ii) Evidence of an oversight program conducted by the ethanol blender, such as periodic sampling and testing of gasoline, for monitoring the volatility of gasoline that the ethanol blender sells, supplies, offers for sale or supply or transports; and

(iii) That the gasoline determined to be in violation contained no more than 10% ethanol (by volume) when it was delivered to the next party in the distribution system.

(7) In paragraphs (g)(1)(i), (g)(2)(i), (g)(3)(i), (g)(4)(ii), (g)(5), and (g)(6)(i) of this section, the respective party must demonstrate by reasonably specific showings, by direct or circumstantial evidence, that it or its employee or agent did not cause the violation.

(8) In addition to the defenses provided in paragraphs (g)(1) through (g)(6) of this section, in any case in which an ethanol blender, distributor, reseller, carrier, retailer, or wholesale purchaser-consumer would be in violation under paragraphs (b), (c), (d), (e) or (f), of this section, as a result of gasoline which contains between 9 and 10 percent ethanol (by volume) but exceeds the applicable standard by more than one pound per square inch (1.0 psi), the ethanol blender, distributor, reseller, carrier, retailer or wholesale purchaser-consumer shall not be deemed in violation if such person can demonstrate, by showing receipt of a certification from the facility from which the gasoline was received or other evidence acceptable to the Administrator, that:

(i) The gasoline portion of the blend complies with the Reid vapor pressure limitations of § 80.27(a); and

(ii) The ethanol portion of the blend does not exceed 10 percent (by volume); and

(iii) No additional alcohol or other additive has been added to increase the Reid vapor pressure of the ethanol portion of the blend.

In the case of a violation alleged against an ethanol blender, distributor, reseller, or carrier, if the demonstration required by paragraphs (g)(8)(i), (ii), and (iii) of this section is made by a certification, it must be supported by

evidence that the criteria in paragraphs (g)(8)(i), (ii), and (iii) of this section have been met, such as an oversight program conducted by or on behalf of the ethanol blender, distributor, reseller or carrier alleged to be in violation, which includes periodic sampling and testing of the gasoline or monitoring the volatility and ethanol content of the gasoline. Such certification shall be deemed sufficient evidence of compliance provided it is not contradicted by specific evidence, such as testing results, and provided that the party has no other reasonable basis to believe that the facts stated in the certification are inaccurate. In the case of a violation alleged against a retail outlet or wholesale purchaser-consumer facility, such certification shall be deemed an adequate defense for the retailer or wholesale purchaser-consumer, provided that the retailer or wholesale purchaser-consumer is able to show certificates for all of the gasoline contained in the storage tank found in violation, and, provided that the retailer or wholesale purchaser-consumer has no reasonable basis to believe that the facts stated in the certifications are inaccurate.

[54 FR 11885, Mar. 22, 1989; 54 FR 27017, June 27, 1989, as amended at 56 FR 64711, Dec. 12, 1991; 58 FR 14484, Mar. 17, 1993]

§ 80.29 Controls and prohibitions on diesel fuel quality.

(a) *Prohibited activities.* (1) Beginning October 1, 1993, no person, including but not limited to, refiners, importers, distributors, resellers, carriers, retailers or wholesale purchaser-consumers, shall manufacture, introduce into commerce, sell, offer for sale, supply, dispense, offer for supply or transport any diesel fuel for use in motor vehicles unless the diesel fuel:

(i) Has a sulfur percentage, by weight, no greater than 0.05 percent;

(ii)(A) Has a cetane index of at least 40; or

(B) Has a maximum aromatic content of 35 volume percent; and

(iii) Is free of visible evidence of:

(A) The dye 1,4-dialkylamino-anthraquinone; and

(B) Beginning October 1, 1994;

(*1*) The dye solvent red 164; unless

(*2*) It is used in a manner that is tax-exempt as defined under section 4082 of the Internal Revenue Code.

(2) In the case of any diesel fuel not intended for use in motor vehicles, no refiner or importer shall add or introduce any amount of the dye 1,4-dialkylamino-anthraquinone into such fuel beginning October 1, 1994.

(b) *Determination of compliance.* Any diesel fuel which does not show visible evidence of being dyed with either 1,4-dialkylamino-anthraquinone (which has a characteristic blue-green color in diesel fuel) or dye solvent red 164 (which has a characteristic red color in diesel fuel) shall be considered to be available for use in diesel motor vehicles and motor vehicle engines, and shall be subject to the prohibitions of paragraph (a) of this section. Compliance with the standards listed in paragraph (a) of this section shall be determined by use of one of the sampling methodologies specified in appendix G to this part.

(c) *Transfer documents.* (1) Any person that transfers custody or title of diesel fuel for use in motor vehicles which contains visible evidence of the dye solvent red 164 shall provide documents to the transferee which state that such fuel meets the applicable standards for sulfur and cetane index or aromatic content under these regulations and is only for tax-exempt use in diesel motor vehicles as defined under section 4082 of the Internal Revenue Code.

(2) Any person that is the transferor or the transferee of diesel fuel for use in motor vehicles which contains visible evidence of the dye solvent red 164, shall retain the documents required under paragraph (c)(1) of this section for a period of five years from the date of transfer of such fuel and shall provide such documents to the Administrator or the Administrator's representative upon request.

(d) *Liability.* Liability for violations of paragraph (a)(1) of this section shall be determined according to the provisions of § 80.30. Any person that violates paragraph (a)(2) or (c) of this section shall be liable for penalties in accordance with paragraph (e) of this section.

(e) *Penalties.* Penalties for violations of paragraph (a) or (c) of this section

shall be determined according to the provisions of §80.5.

[59 FR 35858, July 14, 1994]

§80.30 Liability for violations of diesel fuel control and prohibitions.

(a) *Violations at refiners or importers facilities.* Where a violation of a diesel fuel standard set forth in §80.29 is detected at a refinery or importer's facility, the refiner or importer shall be deemed in violation.

(b) *Violations at carrier facilities.* Where a violation of a diesel fuel standard set forth in §80.29 is detected at a carrier's facility, whether in a transport vehicle, in a storage facility, or elsewhere at the facility, the following parties shall be deemed in violation:

(1) The carrier, except as provided in paragraph (g)(1) of this section; and

(2) The refiner or importer at whose refinery or import facility the diesel fuel was produced or imported, except as provided in paragraph (g)(2) of this section.

(c) *Violations at branded distributor or reseller facilities.* Where a violation of a diesel fuel standard set forth in §80.29 is detected at a distributor or reseller's facility which is operating under the corporate, trade or brand name of a refiner or any of its marketing subsidiaries, the following parties shall be deemed in violation:

(1) The distributor or reseller, except as provided in paragraph (g)(3) of this section;

(2) The carrier (if any), if the carrier caused the diesel fuel to violate the standard by fuel switching, blending, mislabeling, or any other means; and

(3) The refiner under whose corporate, trade, or brand name (or that of any of its marketing subsidiaries) the distributor or reseller is operating, except as provided in paragraph (g)(4) of this section.

(d) *Violations at unbranded distributor facilities.* Where a violation of a diesel fuel standard set forth in §80.29 is detected at the facility of a distributor not operating under a refiner's corporate, trade, or brand name, or that of any of its marketing subsidiaries, the following shall be deemed in violation:

(1) The distributor, except as provided in paragraph (g)(3) of this section;

(2) The carrier (if any), if the carrier caused the diesel fuel to violate the standard by fuel switching, blending, mislabeling, or any other means; and

(3) The refiner or importer at whose refinery or import facility the diesel fuel was produced or imported, except as provided in paragraph (g)(2) of this section.

(e) *Violations at branded retail outlets or wholesale purchaser-consumer facilities.* Where a violation of a diesel fuel standard set forth in §80.29 is detected at a retail outlet or at a wholesale purchaser-consumer facility displaying the corporate, trade, or brand name of a refiner or any of its marketing subsidiaries, the following parties shall be deemed in violation:

(1) The retailer or wholesale purchaser-consumer, except as provided in paragraph (g)(5) of this section;

(2) The distributor and/or reseller (if any), except as provided in paragraph (g)(3) of this section;

(3) The carrier (if any), if the carrier caused the diesel fuel to violate the standard by fuel switching, blending, mislabeling, or any other means; and

(4) The refiner whose corporate, trade, or brand name, or that of any of its marketing subsidiaries, is displayed at the retail outlet or wholesale purchaser-consumer facility, except as provided in paragraph (g)(4) of this section.

(f) *Violations at unbranded retail outlets or wholesale purchaser-consumer facilities.* Where a violation of a diesel fuel standard set forth in §80.29 is detected at a retail outlet or at a wholesale purchaser-consumer facility not displaying the corporate, trade, or brand name of a refiner or any of its marketing subsidiaries, the following parties shall be deemed in violation:

(1) The retailer or wholesale purchaser-consumer, except as provided in paragraph (g)(5) of this section;

(2) The distributor (if any), except as provided in paragraph (g)(3) of this section;

(3) The carrier (if any), if the carrier caused the diesel fuel to violate the standard by fuel switching, blending, mislabeling, or any other means; and

(4) The refiner or importer at whose refinery or import facility the diesel fuel was produced or imported, except as provided in paragraph (g)(2) of this section.

(g) *Defenses.* (1) In any case in which a carrier would be in violation under paragraph (b)(1) of this section, the carrier shall not be deemed in violation if he can demonstrate:

(i) Evidence of an oversight program conducted by the carrier, for monitoring the diesel fuel stored or transported by that carrier, such as periodic sampling and testing of the cetane index and sulfur percentage of incoming diesel fuel, or any other evidence that shows that care was taken to avoid blending the diesel fuel with anything which would change its cetane index or sulfur percentage; and

(ii) That the violation was not caused by the carrier or his employee or agent.

(2) In any case in which a refiner or importer would be in violation under paragraphs (b)(2), (d)(3), or (f)(4) of this section, the refiner or importer shall not be deemed in violation if he can demonstrate:

(i) That the violation was not caused by him or his employee or agent; and

(ii) Test results, performed in accordance with the sampling and testing methodologies set forth in appendix G to this part, ASTM standard test method D 2622–87 or ASTM standard test method D 4294–83 for sulfur percentage (Entitled ''Standard Test Method for Sulfur in Petroleum Products by Non-Dispersive X-Ray Fluorescence Spectrometry''. ASTM standard test method D 4294–83 is incorporated by reference. This incorporation by reference was approved by the Director of the Federal Register in accordance with 5 U.S.C. 552(a) and 1 CFR part 51. A copy may be obtained from the American Society for Testing and Materials, 1916 Race Street, Philadelphia, PA 19103. A copy may be inspected at the Air Docket Section (A–130), room M–1500, U.S. Environmental Protection Agency, Docket No. A–86–03, 401 M Street, SW., Washington, DC 20460 or at the Office of the Federal Register, 800 North Capitol Street, NW., suite 700, Washington, DC. Parties using this method must be able to support their data with a quality control plan and demonstrate the ability to accurately perform this test method. They must also have evidence from the manufacturer or others that it reliably produces results substantially equivalent to those produced by ASTM standard test method D 2622–87.), and ASTM standard test method D 1319–88 for aromatic content or ASTM standard method D 976–80 for cetane index, which evidence that the diesel fuel determined to be in violation was in compliance with the diesel fuel standards when it was delivered to the next party in the distribution scheme.

(3) In any case in which a distributor or reseller would be in violation under paragraphs (c)(1), (d)(1), (e)(2) or (f)(2) of this section, the distributor or reseller shall not be deemed in violation if he can demonstrate:

(i) That the violation was not caused by him or his employee or agent; and

(ii) Evidence of an oversight program conducted by the distributor or reseller, such as periodic sampling and testing of diesel fuel, for monitoring the sulfur percentage and cetane index of the diesel fuel that the distributor or reseller sells, supplies, offers for sale or supply, or transports.

(4) In any case in which a refiner would be in violation under paragraphs (c)(3) or (e)(4) of this section, the refiner shall not be deemed in violation if he can demonstrate all of the following:

(i) Test results, performed in accordance with the sampling and testing methodologies set forth in appendix G to this part, ASTM standard test method D 2622–87 or ASTM standard test method D 4294–83 for sulfur percentage (Parties using ASTM standard test method D 4294–83 must be able to support their data with a quality control plan and demonstrate the ability to accurately perform this test method. They must also have evidence from the manufacturer or others that it reliably produces results substantially equivalent to those produced by ASTM standard test method D 2622–87.) and ASTM standard test method D 1319–88 for aromatic content or ASTM standard method D 976–80 for cetane index at the refinery at which the diesel fuel was

produced, which evidence that the diesel fuel was in compliance with the diesel fuel standards when transported from the refinery;

(ii) That the violation was not caused by him or his employee or agent; and

(iii) That the violation:

(A) Was caused by an act in violation of law (other than the Act or this part), or an act of sabotage or vandalism, whether or not such acts are violations of law in the jurisdiction where the violation of the requirements of this part occurred, or

(B) Was caused by the action of a reseller or a retailer supplied by such reseller, in violation of a contractual undertaking imposed by the refiner on such reseller designed to prevent such action, and despite reasonable efforts by the refiner (such as periodic sampling and testing) to insure compliance with such contractual obligation, or

(C) Was caused by the action of a retailer who is supplied directly by the refiner (and not by a reseller), in violation of a contractual undertaking imposed by the refiner on such retailer designed to prevent such action, and despite reasonable efforts by the refiner (such as periodic sampling and testing) to insure compliance with such contractual obligation, or

(D) Was caused by the action of a distributor subject to a contract with the refiner for transportation of diesel fuel from a terminal to a distributor, retailer or wholesale purchaser-consumer, in violation of a contractual undertaking imposed by the refiner on such distributor designed to prevent such action, and despite reasonable efforts by the refiner (such as periodic sampling and testing) to ensure compliance with such contractual obligation, or

(E) Was caused by a carrier or other distributor not subject to a contract with the refiner but engaged by him for transportation of diesel fuel from a terminal to a distributor, retailer or wholesale purchaser-consumer, despite reasonable efforts by the refiner (such as specification or inspection of equipment) to prevent such action, or

(F) Occurred at a wholesale purchaser-consumer facility: *Provided, however,* That if such wholesale purchaser-consumer was supplied by a reseller, the refiner must demonstrate that the violation could not have been prevented by such reseller's compliance with a contractual undertaking imposed by the refiner on such reseller as provided in paragraph (g)(4)(iii)(B) of this section.

(iv) In paragraphs (g)(4)(iii) (A) through (E) of this section, the term *was caused* means that the refiner must demonstrate by reasonably specific showings, by direct or circumstantial evidence, that the violation was caused or must have been caused by another.

(5) In any case in which a retailer or wholesale purchaser-consumer would be in violation under paragraphs (e)(1) or (f)(1) of this section, the retailer or wholesale purchaser-consumer shall not be deemed in violation if he can demonstrate that the violation was not caused by him or his employee or agent.

(6) In paragraphs (g)(1)(iii), (g)(2)(i), (g)(3)(i), (g)(4)(ii) and (g)(5) of this section, the respective party must demonstrate by reasonably specific showings, by direct or circumstantial evidence, that it or its employee or agent did not cause the violation.

(7) In the case of any distributor or reseller that would be in violation under paragraph (e)(2) or (f)(2) of this section or any wholesale purchaser-consumer or retailer that would be in violation under paragraph (e)(1) or (f)(1) of this section for diesel fuel for use in motor vehicles which contains visible evidence of the dye solvent red 164, the distributor or reseller or wholesale purchaser-consumer or retailer shall not be deemed in violation if he can:

(i) Demonstrate that the violation was not caused by him or his employee or agent,

(ii) Demonstrate that the fuel has been supplied, offered for supply, transported or available for tax-exempt use as defined under section 4082 of the Internal Revenue Code, and

(iii) Provide evidence from the supplier in the form of documentation

that the fuel met the applicable standards under paragraph (a)(1) of this section for sulfur and cetane index or aromatics content for use in motor vehicles.

[55 FR 34138, Aug. 21, 1990, as amended at 59 FR 35859, July 14, 1994]

§ 80.32 Controls applicable to liquefied petroleum gas retailers and wholesale purchaser-consumers.

After January 1, 1998 every retailer and wholesale purchaser- consumer handling over 13,660 gallons of liquefied petroleum gas per month shall equip each pump from which liquefied petroleum gas is introduced into motor vehicles with a nozzle that has no greater than 2.0 cm^3 dead space from which liquefied petroleum gas will be released upon nozzle disconnect from the vehicle, as measured from the nozzle face which seals against the vehicle receptacle ''O'' ring, and as determined by calculation of the geometric shape of the nozzle. After January 1, 2000 this requirement applies to every liquefied petroleum gas retailer and wholesale purchaser- consumer. Any dispensing pump shown to be dedicated to heavy-duty vehicles is exempt from this requirement.

[59 FR 48490, Sept. 21, 1994]

§ 80.33 Controls applicable to natural gas retailers and wholesale purchaser-consumers.

(a) After January 1, 1998 every retailer and wholesale purchaser-consumer handling over 1,215,000 standard cubic feet of natural gas per month shall equip each pump from which natural gas is introduced into natural gas motor vehicles with a nozzle and hose configuration which vents no more than 1.2 grams of natural gas to the atmosphere per refueling of a vehicle complying with §86.098–8(d)(1)(iv) of this chapter, as determined by calculation of the geometric shape of the nozzle and hose. After January 1, 2000 this requirement applies to every natural gas retailer and wholesale purchaser-consumer. Any dispensing pump shown to be dedicated to heavy-duty vehicles is exempt from this requirement.

(b) The provisions of paragraph (a) of this section can be waived for refueling stations which were in operation on or before January 1, 1998 provided the station operator can demonstrate, to the satisfaction of the Administrator, that compliance with paragraph (a) of this section would require additional compression equipment or other modifications with costs similar to or greater than the cost of additional compression equipment.

[59 FR 48490, Sept. 21, 1994]

Subpart C—Oxygenated Gasoline

§ 80.35 Labeling of retail gasoline pumps; oxygenated gasoline.

(a) For oxygenated gasoline programs with a minimum oxygen content per gallon or minimum oxygen content requirement in conjunction with a credit program, the following shall apply:

(1) Each gasoline pump stand from which oxygenated gasoline is dispensed at a retail outlet in the control area shall be affixed during the control period with a legible and conspicuous label which contains the following statement:

The gasoline dispensed from this pump is oxygenated and will reduce carbon monoxide pollution from motor vehicles.

(2) The posting of the above statement shall be in block letters of no less than 20-point bold type; in a color contrasting with the intended background. The label shall be placed on the vertical surface of the pump on each side with gallonage and price meters and shall be on the upper two-thirds of the pump, clearly readable to the public.

(3) The retailer shall be responsible for compliance with the labeling requirements of this section.

(b) For oxygenated gasoline programs with a credit program and no minimum oxygen content requirement, the following shall apply:

(1) Each gasoline pump stand from which oxygenated gasoline is dispensed at a retail outlet in the control area shall be affixed during the control period with a legible and conspicuous label which contains the following statement:

The fuel dispensed from this pump meets the requirements of the Clean Air Act as part of a program to reduce carbon monoxide pollution from motor vehicles.

(2) The posting of the above statement shall be in block letters of no less than 20-point bold type; in a color contrasting with the intended background. The label shall be placed on the vertical surface of the pump on each side with gallonage and price meters and shall be on the upper two-thirds of the pump, clearly readable to the public.

(3) The retailer shall be responsible for compliance with the labeling requirements of this section.

[57 FR 47771, Oct. 20, 1992]

§§80.36—80.39 [Reserved]

Subpart D—Reformulated Gasoline

SOURCE: 59 FR 7813, Feb. 16, 1994, unless otherwise noted.

§80.40 Fuel certification procedures.

(a) Gasoline that complies with one of the standards specified in §80.41 (a) through (f) that is relevant for the gasoline, and that meets all other relevant requirements prescribed under §80.41, shall be deemed certified.

(b) Any refiner or importer may, with regard to a specific fuel formulation, request from the Administrator a certification that the formulation meets one of the standards specified in §80.41 (a) through (f).

§80.41 Standards and requirements for compliance.

(a) *Simple model per-gallon standards.* The ''simple model'' standards for compliance when achieved on a per-gallon basis are as follows:

SIMPLE MODEL PER-GALLON STANDARDS

Reid vapor pressure (in pounds per square inch):	
Gasoline designated for VOC-Control Region 1	≤7.2
Gasoline designated for VOC-Control Region 2	≤8.1
Oxygen content (percent, by weight)	≥2.0
Toxic air pollutants emissions reduction (percent)	≥15.0
Benzene (percent, by volume)	≤1.00

(b) *Simple model averaged standards.* The ''simple model'' standards when achieved on average are as follows:

SIMPLE MODEL AVERAGED STANDARDS

Reid vapor pressure (in pounds per square inch):	
Gasoline designated for VOC-Control Region 1:	
Standard	≤7.1
Per-Gallon Maximum	≤7.4
Gasoline designated for VOC-Control Region 2:	
Standard	≤8.0
Per-Gallon Maximum	≤8.3
Oxygen content (percent, by weight):	
Standard	≥2.1
Per-Gallon Minimum	≥1.5
Toxic air pollutants emissions reduction (percent)	≥16.5
Benzene (percent, by volume):	
Standard	≤0.95
Per-Gallon Maximum	≤1.30

(c) *Phase I complex model per gallon standards.* The Phase I ''complex model'' standards for compliance when achieved on a per-gallon basis are as follows:

PHASE I—COMPLEX MODEL PER-GALLON STANDARDS

VOC emissions performance reduction (percent):	
Gasoline designated for VOC-Control Region 1	≥35.1
Gasoline designated for VOC-Control Region 2	≥15.6
Toxic air pollutants emissions performance reduction (percent)	≥15.0
NO_X emissions performance reduction (percent)	≥0.0
Oxygen content (percent, by weight)	≥2.0
Benzene (percent, by volume)	≤1.00

(d) *Phase I complex model averaged standards.* The Phase I ''complex model'' standards for compliance when achieved on average are as follows:

PHASE I—COMPLEX MODEL AVERAGED STANDARDS

VOC emissions performance reduction (percent):	
Gasoline designated for VOC-Control Region 1:	
Standard	≥36.6
Per-Gallon Minimum	≤32.6
Gasoline designated for VOC-Control Region 2:	
Standard	≥17.1
Per-Gallon Minimum	≥13.1
Toxics air pollutants emissions performance reduction (percent)	≥16.5

PHASE I—COMPLEX MODEL AVERAGED STANDARDS—Continued

NO_X emissions performance reduction (percent):	
Standard	≥1.5
Per-Gallon Minimum	≤−2.5
Oxygen content (percent, by weight):	
Standard	≥2.1
Per-Gallon Minimum	≥1.5
Benzene (percent, by volume):	
Standard	≤0.95
Per-Gallon Maximum	≤1.30

(e) *Phase II complex model per-gallon standards.* The Phase II ''complex model'' standards for compliance when achieved on a per-gallon basis are as follows:

PHASE II—COMPLEX MODEL PER-GALLON STANDARDS

VOC emissions performance reduction (percent):	
Gasoline designated for VOC-Control Region 1	≥27.5
Gasoline designated for VOC-Control Region 2	≥25.9
Toxic air pollutants emissions performance reduction (percent)	≥20.0
NO_X emissions performance reduction (percent):	
Gasoline designated as VOC-controlled	≥5.5
Gasoline not designated as VOC-controlled	≥0.0
Oxygen content (percent, by weight)	≥2.0
Benzene (percent, by volume)	≤1.00

(f) *Phase II complex model averaged standards.* The Phase II ''complex model'' standards for compliance when achieved on average are as follows:

PHASE II—COMPLEX MODEL AVERAGED STANDARDS

VOC emissions performance reduction (percent):	
Gasoline designated for VOC-Control Region 1:	
Standard	≥29.0
Per-Gallon Minimum	≥25.0
Gasoline designated for VOC-Control Region 2:	
Standard	≥27.4
Per-Gallon Minimum	≥23.4
Toxics air pollutants emissions performance reduction (percent)	≥21.5
NO_X emissions performance reduction (percent):	
Gasoline designated as VOC-controlled:	
Standard	≥6.8
Per-Gallon Minimum	≥3.0

PHASE II—COMPLEX MODEL AVERAGED STANDARDS—Continued

Gasoline not designated as VOC-controlled:	
Standard	≥1.5
Per-Gallon Minimum	≥−2.5
Oxygen content (percent, by weight):	
Standard	≥2.1
Per-Gallon Minimum	≥1.5
Benzene (percent, by volume):	
Standard	≤0.95
Per-Gallon Maximum	≤1.30

(g) *Oxygen maximum standard.* (1) The per-gallon standard for maximum oxygen content, which applies to reformulated gasoline subject to the simple model per-gallon or average standards, is as follows:

(i) Oxygen content shall not exceed 3.2 percent by weight from ethanol within the boundaries of any state if the state notifies the Administrator that the use of an oxygenate will interfere with attainment or maintenance of an ambient air quality standard or will contribute to an air quality problem.

(ii) A state may request the standard specified in paragraph (g)(1)(i) of this section separately for reformulated gasoline designated as VOC-controlled and reformulated gasoline not designated as VOC-controlled.

(2) The standard in paragraph (g)(1)(i) of this section shall apply 60 days after the Administrator publishes a notice in the FEDERAL REGISTER announcing such a standard.

(h) *Additional standard requirements.* In addition to the standards specified in paragraphs (a) through (g) of this section, the following standards apply for all reformulated gasoline:

(1) The standard for heavy metals, including lead or manganese, on a per-gallon basis, is that reformulated gasoline may contain no heavy metals. The Administrator may waive this prohibition for a heavy metal (other than lead) if the Administrator determines that addition of the heavy metal to the gasoline will not increase, on an aggregate mass or cancer-risk basis, toxic air pollutant emissions from motor vehicles.

(2) In the case of any refinery or importer subject to the simple model standards:

(i) The annual average levels for sulfur, T–90, and olefins cannot exceed that refinery's or importer's 1990 baseline levels for each of these parameters; and

(ii) The 1990 baseline levels and the annual averages for these parameters shall be established using the methodology set forth in §§ 80.91 through 80.92; and

(iii) In the case of a refiner that operates more than one refinery, the standards specified under this paragraph (h)(2) shall be met using the refinery grouping selected by the refiner under § 80.101(h).

(i) *Use of simple and complex models.* (1) During each calendar year 1995 through 1997, any refinery or importer shall be subject to either the simple model standards specified in paragraphs (a) and (b) of this section, or the Phase I complex model standards specified in paragraphs (c) and (d) of this section, at the option of the refiner or importer, provided that:

(i) No refinery or importer may be subject to a combination of simple and complex standards during any calendar year; and

(ii) Any refiner or importer that elects to achieve compliance with the anti-dumping requirements using the:

(A) Simple model shall meet the requirements of this Subpart D using the simple model standards; or

(B) Complex model or optional complex model shall meet the requirements of this Subpart D using the complex model standards.

(2) During the period January 1, 1998 through December 31, 1999, any refiner or importer shall be subject to the Phase I complex model standards specified in paragraphs (c) and (d) of this section.

(3) Beginning on January 1, 2000, any refiner or importer shall be subject to the Phase II complex model standards specified in paragraphs (e) and (f) of this section.

(j) *Complex model early use.* Before January 1, 1998, the VOC, toxics, and NO_X emissions performance standards for any refinery or importer subject to the Phase I complex model standards shall be determined by evaluating all of the following parameter levels in the Phase I complex model (specified in § 80.45) at one time:

(1) The simple model values for benzene, RVP, and oxygen specified in § 80.41 (a) or (b), as applicable;

(2) The aromatics value which, together with the values for benzene, RVP, and oxygen determined under paragraph (j)(1) of this section, meets the Simple Model toxics requirement specified in paragraph (a) or (b) of this section, as applicable;

(3) The refinery's or importer's individual baseline values for sulfur, E–300, and olefins, as established under § 80.91; and

(4) The appropriate seasonal value of E–200 specified in § 80.45(b)(2).

(k) *Effect of VOC survey failure.* (1) On each occasion during 1995 or 1996 that a covered area fails a simple model VOC emissions reduction survey conducted pursuant to § 80.68, the RVP requirements for that covered area beginning in the year following the failure shall be adjusted to be more stringent as follows:

(i) The required average RVP level shall be decreased by an additional 0.1 psi; and

(ii) The maximum RVP level for each gallon of averaged gasoline shall be decreased by an additional 0.1 psi.

(2) On each occasion that a covered area fails a complex model VOC emissions reduction survey conducted pursuant to § 80.68, or fails a simple model VOC emissions reduction survey conducted pursuant to § 80.68 during 1997, the VOC emissions performance standard for that covered area beginning in the year following the failure shall be adjusted to be more stringent as follows:

(i) The required average VOC emissions reduction shall be increased by an additional 1.0%; and

(ii) The minimum VOC emissions reduction, for each gallon of averaged gasoline, shall be increased by an additional 1.0%.

(3) In the event that a covered area for which required VOC emissions reductions have been made more stringent passes all VOC emissions reduction surveys in two consecutive years, the averaging standards VOC emissions reduction for that covered area beginning in the year following the second

year of passed survey series shall be made less stringent as follows:

(i) The required average VOC emissions reduction shall be decreased by 1.0%; and

(ii) The minimum VOC emissions reduction shall be decreased by 1.0%.

(4) In the event that a covered area for which the required VOC emissions reductions have been made less stringent fails a subsequent VOC emissions reduction survey:

(i) The required average VOC emission reductions for that covered area beginning in the year following this subsequent failure shall be made more stringent by increasing the required average and the minimum VOC emissions reduction by 1.0%; and

(ii) The required VOC emission reductions for that covered area thereafter shall not be made less stringent regardless of the results of subsequent VOC emissions reduction surveys.

(l) *Effect of toxics survey failure.* (1) On each occasion during 1995 or 1996 that a covered area fails a simple model toxics emissions reduction survey series, conducted pursuant to § 80.68, the simple model toxics emissions reduction requirement for that covered area beginning in the year following the year of the failure is made more stringent by increasing the average toxics emissions reduction by an additional 1.0%.

(2) On each occasion that a covered area fails a complex model toxics emissions reduction survey series, conducted pursuant to § 80.68, or fails a simple model toxics emissions reduction survey series conducted pursuant to § 80.68 during 1997, the complex model toxics emissions reduction requirement for that covered area beginning in the year following the year of the failure is made more stringent by increasing the average toxics emissions reduction by an additional 1.0%.

(3) In the event that a covered area for which the toxics emissions standard has been made more stringent passes all toxics emissions survey series in two consecutive years, the averaging standard for toxics emissions reductions for that covered area beginning in the year following the second year of passed survey series shall be made less stringent by decreasing the average toxics emissions reduction by 1.0%.

(4) In the event that a covered area for which the toxics emissions reduction standard has been made less stringent fails a subsequent toxics emissions reduction survey series:

(i) The standard for toxics emissions reduction for that covered area beginning in the year following this subsequent failure shall be made more stringent by increasing the average toxics emissions reduction by 1.0%; and

(ii) The standard for toxics emissions reduction for that covered area thereafter shall not be made less stringent regardless of the results of subsequent toxics emissions reduction surveys.

(m) *Effect of* NO_X survey failure. (1) On each occasion that a covered area fails a NO_X emissions reduction survey conducted pursuant to § 80.68, except in the case of Phase II complex model NO_X standards for VOC-controlled gasoline, the NO_X emissions reduction requirements for that covered area beginning in the year following the failure shall be adjusted to be more stringent as follows:

(i) The required average NO_X emissions reduction shall be increased by an additional 1.0%; and

(ii) The minimum NO_X emissions reduction, for each gallon of averaged gasoline, shall be increased by an additional 1.0%.

(2) In the event that a covered area for which required NO_X emissions reductions have been made more stringent passes all NO_X emissions reduction surveys in two consecutive years, the averaging standards for NO_X emissions reduction for that covered area beginning in the year following the second year of passed survey series shall be made less stringent as follows:

(i) The required average NO_X emissions reduction shall be decreased by 1.0%; and

(ii) The minimum NO_X emissions reduction shall be decreased by 1.0%.

(3) In the event that a covered area for which the required NO_X emissions reductions have been made less stringent fails a subsequent NO_X emissions reduction survey:

(i) The required average NO_X emission reductions for that covered area beginning in the year following this

subsequent failure shall be made more stringent by increasing the required average and the minimum NO_X emissions reduction by 1.0%; and

(ii) The required NO_X emission reductions for that covered area thereafter shall not be made less stringent regardless of the results of subsequent NO_X emissions reduction surveys.

(n) *Effect of benzene survey failure.* (1) On each occasion that a covered area fails a benzene content survey series, conducted pursuant to § 80.68, the benzene content standards for that covered area beginning in the year following the year of the failure shall be made more stringent as follows:

(i) The average benzene content shall be decreased by 0.05% by volume; and

(ii) The maximum benzene content for each gallon of averaged gasoline shall be decreased by 0.10% by volume.

(2) In the event that a covered area for which the benzene standards have been made more stringent passes all benzene content survey series conducted in two consecutive years, the benzene standards for that covered area beginning in the year following the second year of passed survey series shall be made less stringent as follows:

(i) The average benzene content shall be increased by 0.05% by volume; and

(ii) The maximum benzene content for each gallon of averaged gasoline shall be increased by 0.10% by volume.

(3) In the event that a covered area for which the benzene standards have been made less stringent fails a subsequent benzene content survey series:

(i) The standards for benzene content for that covered area beginning in the year following this subsequent failure shall be the more stringent standards which were in effect prior to the operation of paragraph (n)(2) of this section; and

(ii) The standards for benzene content for that covered area thereafter shall not be made less stringent regardless of the results of subsequent benzene content surveys.

(o) *Effect of oxygen survey failure.* (1) In any year that a covered area fails an oxygen content survey series, conducted pursuant to § 80.68, the minimum oxygen content requirement for that covered area beginning in the year following the year of the failure is made more stringent by increasing the minimum oxygen content standard, for each gallon of averaged gasoline, by an additional 0.1%; however, in no case shall the minimum oxygen content standard be greater than 2.0%.

(2) In the event that a covered area for which the minimum oxygen content standard has been made more stringent passes all oxygen content survey series in two consecutive years, the minimum oxygen content standard for that covered area beginning in the year following the second year of passed survey series shall be made less stringent by decreasing the minimum oxygen content standard by 0.1%.

(3) In the event that a covered area for which the minimum oxygen content standard has been made less stringent fails a subsequent oxygen content survey series:

(i) The standard for minimum oxygen content for that covered area beginning in the year following this subsequent failure shall be made more stringent by increasing the minimum oxygen content standard by 0.1%; and

(ii) The minimum oxygen content standard for that covered area thereafter shall not be made less stringent regardless of the results of subsequent oxygen content surveys.

(p) *Effective date for changed minimum or maximum standards.* In the case of any minimum or maximum standard that is changed to be more stringent by operation of paragraphs (k), (m), (n), or (o) of this section, the effective date for such change shall be ninety days following the date EPA announces the change.

(q) *Refineries, importers, and oxygenate blenders subject to adjusted standards.* Standards for average compliance that are adjusted to be more or less stringent by operation of paragraphs (k), (l), (m), (n), or (o) of this section apply to averaged reformulated gasoline produced at each refinery or oxygenate blending facility, or imported by each importer as follows:

(1) Adjusted standards for a covered area apply to averaged reformulated gasoline that is produced at a refinery or oxygenate blending facility if:

(i) Any averaged reformulated gasoline from that refinery or oxygenate blending facility supplied the covered

area during any year a survey was conducted which gave rise to a standards adjustment; or

(ii) Any averaged reformulated gasoline from that refinery or oxygenate blending facility supplies the covered area during any year that the standards are more stringent than the initial standards; unless

(iii) The refiner or oxygenate blender is able to show that the volume of averaged reformulated gasoline from a refinery or oxygenate blending facility that supplied the covered area during any year under paragraphs (q)(1) (i) or (ii) of this section was less than one percent of the reformulated gasoline produced at the refinery or oxygenate blending facility during that year, or 100,000 barrels, whichever is less.

(2) Adjusted standards for a covered area apply to averaged reformulated gasoline that is imported by an importer if:

(i) The covered area with the adjusted standard is located in Petroleum Administration for Defense District (PADD) I, and the gasoline is imported at a facility located in PADDs I, II or III;

(ii) The covered area with the adjusted standard is located in PADD II, and the gasoline is imported at a facility located in PADDs I, II, III, or IV;

(iii) The covered area with the adjusted standard is located in PADD III, and the gasoline is imported at a facility located in PADDs II, III, or IV;

(iv) The covered area with the adjusted standard is located in PADD IV, and the gasoline is imported at a facility located in PADDs II, or IV; or

(v) The covered area with the adjusted standard is located in PADD V, and the gasoline is imported at a facility located in PADDs III, IV, or V; unless

(vi) Any gasoline which is imported by an importer at any facility located in any PADD supplies the covered area, in which case the adjusted standard also applies to averaged gasoline imported at that facility by that importer.

(3) Any gasoline that is transported in a fungible manner by a pipeline, barge, or vessel shall be considered to have supplied each covered area that is supplied with any gasoline by that pipeline, or barge or vessel shipment, unless the refiner or importer is able to establish that the gasoline it produced or imported was supplied only to a smaller number of covered areas.

(4) Adjusted standards apply to all averaged reformulated gasoline produced by a refinery or imported by an importer identified in this paragraph (q), except:

(i) In the case of adjusted VOC standards for a covered area located in VOC Control Region 1, the adjusted VOC standards apply only to averaged reformulated gasoline designated as VOC-controlled intended for use in VOC Control Region 1; and

(ii) In the case of adjusted VOC standards for a covered area located in VOC Control Region 2, the adjusted VOC standards apply only to averaged reformulated gasoline designated as VOC-controlled intended for use in VOC Control Region 2.

(r) *Definition of PADD.* For the purposes of this section only, the following definitions of PADDs apply:

(1) The following states are included in PADD I:

Connecticut
Delaware
District of Columbia
Florida
Georgia
Maine
Maryland
Massachusetts
New York
New Hampshire
New Jersey
North Carolina
Pennsylvania
Rhode Island
South Carolina
Vermont
Virginia
West Virginia

(2) The following states are included in PADD II:

Illinois
Indiana
Iowa
Kansas
Kentucky
Michigan
Minnesota
Missouri
Nebraska
North Dakota
Ohio
Oklahoma

South Dakota
Tennessee
Wisconsin

(3) The following states are included in PADD III:

Alabama
Arkansas
Louisiana
Mississippi
New Mexico
Texas

(4) The following states are included in PADD IV:

Colorado
Idaho
Montana
Utah
Wyoming

(5) The following states are included in PADD V:

Arizona
California
Nevada
Oregon
Washington

[59 FR 7813, Feb. 16, 1994, as amended at 59 FR 36958, July 20, 1994; 61 FR 12041, Mar. 25, 1996]

§80.42 Simple emissions model.

(a) *VOC emissions.* The following equations shall comprise the simple model for VOC emissions. The simple model for VOC emissions shall be used only in determining toxics emissions:

Summer=The period of May 1 through September 15

Winter=The period of September 16 through April 30

EXHVOCS1=Exhaust nonmethane, nonethane VOC emissions from the fuel in question, in grams per mile, for VOC control region 1 during the summer period.

EXHVOCS2=Exhaust nonmethane, nonethane VOC emissions from the fuel in question, in grams per mile, for VOC control region 2 during the summer period.

EXHVOCW=Exhaust nonmethane, nonethane VOC emissions from the fuel in question, in grams per mile, during the winter period.

EVPVOCS1=Evaporative nonmethane, nonethane VOC emissions from the fuel in question, in grams per mile, for VOC control region 1 during the summer period.

EVPVOCS2=Evaporative nonmethane, nonethane VOC emissions from the fuel in question, in grams per mile, for VOC control region 2 during the summer period.

RLVOCS1=Running loss nonmethane, nonethane VOC emissions from the fuel in question, in grams per mile, for VOC control region 1 during the summer period.

RLVOCS2=Running loss nonmethane, nonethane VOC emissions from the fuel in question, in grams per mile, for VOC control region 2 during the summer period.

REFVOCS1=Refueling nonmethane, nonethane VOC emissions from the fuel in question, in grams per mile, for VOC control region 1 during the summer period.

REFVOCS2=Refueling nonmethane, nonethane VOC emissions from the fuel in question, in grams per mile, for VOC control region 2 during the summer period.

OXCON=Oxygen content of the fuel in question, in terms of weight percent (as measured under §80.46)

RVP=Reid vapor pressure of the fuel in question, in pounds per square inch (psi)

(1) The following equations shall comprise the simple model for VOC emissions in VOC Control Region 1 during the summer period:

$$EXHVOCS1=0.444\times(1-(0.127/2.7)\times OXCON)$$

$$EVPVOCS1=0.7952-0.2461\times RVP+0.02293\times RVP\times RVP$$

$$RLVOCS1=-0.734+0.1096\times RVP+0.002791\times RVP\times RVP$$

$$REFVOCS1=0.04\times((0.1667\times RVP)-0.45)$$

(2) The following equations shall comprise the simple model for VOC emissions in VOC Control Region 2 during the summer period:

$$EXHVOCS2=0.444\times(1-(0.127/2.7)\times OXCON)$$

$$EVPVOCS2=0.813-0.2393\times RVP+0.021239\times RVP\times RVP$$

$$RLVOCS2=0.2963-0.1306\times RVP+0.016255\times RVP\times RVP$$

$$REFVOCS2=0.04\times((0.1667\times RVP)-0.45)$$

(3) The following equation shall comprise the simple model for VOC emissions during the winter period:

$$EXHVOCW=0.656\times(1-(0.127/2.7)\times OXCON)$$

(b) *Toxics emissions.* The following equations shall comprise the simple model for toxics emissions:

EXHBEN=Exhaust benzene emissions from the fuel in question, in milligrams per mile

EVPBEN=Evaporative benzene emissions from the fuel in question, in milligrams per mile

HSBEN=Hot soak benzene emissions from the fuel in question, in milligrams per mile

DIBEN=Diurnal benzene emissions from the fuel in question, in milligrams per mile

RLBEN=Running loss benzene emissions from the fuel in question, in milligrams per mile

REFBEN=Refueling benzene emissions from the fuel in question, in milligrams per mile

MTBE=Oxygen content of the fuel in question in the form of MTBE, in terms of weight percent (as measured under § 80.46)

ETOH=Oxygen content of the fuel in question in the form of ethanol, in terms of weight percent (as measured under § 80.46)

ETBE=Oxygen content of the fuel in question in the form of ETBE, in terms of weight percent (as measured under § 80.46)

FORM=Formaldehyde emissions from the fuel in question, in milligrams per mile

ACET=Acetaldehyde emissions from the fuel in question, in milligrams per mile

POM=Emissions of polycyclic organic matter from the fuel in question, in milligrams per mile

BUTA=Emissions of 1,3-Butadiene from the fuel in question, in milligrams per mile

FBEN=Fuel benzene of the fuel in question, in terms of volume percent (as measured under § 80.46)

FAROM=Fuel aromatics of the fuel in question, in terms of volume percent (as measured under § 80.46)

TOXREDS1=Total toxics reduction of the fuel in question during the summer period for VOC control region 1 in percent

TOXREDS2=Total toxics reduction of the fuel in question during the summer period for VOC control region 2 in percent

TOXREDW=Total toxics reduction of the fuel in question during the winter period in percent

(1) The following equations shall comprise the simple model for toxics emissions in VOC control region 1 during the summer period:

TOXREDS1=[100×(53.2 − EXHBEN − EVPBEN − RLBEN − REFBEN − FORM − ACET − BUTA − POM)]/53.2

EXHBEN=[1.884+0.949 × FBEN+0.113 × (FAROM − FBEN))/100] × 1000 × EXHVOCS1

EVPBEN=HSBEN+DIBEN

HSBEN=FBEN × (EVPVOCS1 × 0.679) × 1000 × [(1.4448 − (0.0684 × MTBE/2.0) − (0.080274 × RVP))/100]

DIBEN=FBEN × (EVPVOCS1 × 0.321) × 1000 × [(1.3758 − (0.0579 × MTBE/2.0) − (0.080274 × RVP))/100]

RLBEN=FBEN × RLVOCS1 × 1000 × [(1.4448 − (0.0684 × MTBE/2.0) − (0.080274 × RVP))/100]

REFBEN=FBEN × REFVOCS1 × 1000 × [(1.3972 − (0.0591xMTBE/2.0) − (0.081507 × RVP))/100]

BUTA=0.00556xEXHVOCS1x1000

POM=3.15 × EXHVOCS1

(i) For any oxygenate or mixtures of oxygenates, the formaldehyde and acetaldehyde shall be calculated with the following equations:

FORM=0.01256 × EXHVOCS1 × 1000 × [1+(0.421/2.7) × MTBE+TAME)+(0.358/3.55) × ETOH + (0.137/2.7) × (ETBE+ETAE)]

ACET=0.00891 × EXHVOCS1 × 1000 × [1 + (0.078/2.7) × (MTBE+TAME)+(0.865/3.55) × ETOH+(0.867/2.7) × (ETBE+ETAE)]

(ii) When calculating formaldehyde and acetaldehyde emissions using the equations in paragraph (b)(1)(i) of this section, oxygen in the form of alcohols which are more complex or have higher molecular weights than ethanol shall be evaluated as if it were in the form of ethanol. Oxygen in the form of methyl ethers other than TAME and MTBE shall be evaluated as if it were in the form of MTBE. Oxygen in the form of ethyl ethers other than ETBE shall be evaluated as if it were in the form of ETBE. Oxygen in the form of non-methyl, non-ethyl ethers shall be evaluated as if it were in the form of ETBE. Oxygen in the form of methanol or

non-alcohol, non-ether oxygenates shall not be evaluated with the Simple Model, but instead must be evaluated through vehicle testing under the Complex Model per § 80.48.

(2) The following equations shall comprise the simple model for toxics emissions in VOC control region 2 during the summer period:

TOXREDS2=100 × (52.1 − EXHBEN − EVPBEN − RLBEN − REFBEN − FORM − ACET − BUTA − POM)/52.1

EXHBEN=[(1.884+0.949 × FBEN+0.113 × (FAROM − FBEN))/100] × 1000 × EXHVOCS2

EVPBEN=HSBEN+DIBEN

HSBEN=FBEN × (EVPVOCS2 × 0.679) × 1000 × [(1.4448 − (0.0684 × MTBE/2.0) − (0.080274 × RVP))/100]

DIBEN=FBEN × (EVPVOCS2 × 0.321) × 1000 × [(1.3758 − (0.0579 × MTBE/2.0) − (0.080274 × RVP))/100]

RLBEN=FBEN × RLVOCS2 × 1000 × [(1.4448 − (0.0684 × MTBE/2.0) − (0.080274 × RVP))/100]

REFBEN=FBEN × REFVOCS2 × 1000 × [(1.3972 − (0.0591 × MTBE/2.0) − (0.081507 × RVP))/100]

BUTA=0.00556 × EXHVOCS2 × 1000

POM=3.15 × EXHVOCS2

(i) For any oxygenate or mixtures of oxygenates, the formaldehyde and acetaldehyde shall be calculated with the following equations:

FORM=0.01256 × EEXHVOCS2 × 1000 × [1+(0.421/2.7) × (MTBE+TAME)+(0.358/3.55) × ETOH+(0.137/2.7) × (ETBE+ETAE)]

ACET=0.00891 × EXHVOCS2 × 1000 × [1+(0.078/2.7) × (MTBE+TAME)+(0.865/3.55) × ETOH+(0.867/2.7) × (ETBE+ETAE)]

(ii) When calculating formaldehyde and acetaldehyde emissions using the equations in paragraph (b)(2)(i) of this section, oxygen in the form of alcohols which are more complex or have higher molecular weights than ethanol shall be evaluated as if it were in the form of ethanol. Oxygen in the form of methyl ethers other than TAME and MTBE shall be evaluated as if it were in the form of MTBE. Oxygen in the form of ethyl ethers other than ETBE shall be evaluated as if it were in the form of ETBE. Oxygen in the form of non-methyl, non-ethyl ethers shall be evaluated as if it were in the form of ETBE. Oxygen in the form of methanol or non-alcohol, non-ether oxygenates shall not be evaluated with the Simple Model, but instead must be evaluated through vehicle testing under the Complex Model per § 80.48.

(3) The following equations shall comprise the simple model for toxics emissions during the winter period:

TOXREDW=100 × (55.5 − EXHBEN − FORM − ACET − BUTA − POM) /55.5

EXHBEN=[(1.884+0.949 × FBEN+0.113 × (FAROM − FBEN)) /100] × 1000 × EXHVOCW

BUTA=0.00556 × EXHVOCW × 1000

POM=2.13 × EXHVOCW

(i) For any oxygenate or mixtures of oxygenates, the formaldehyde and acetaldehyde shall be calculated with the following equations:

FORM=0.01256 × EXHVOCS1 × 1000 × [1+(0.421/2.7) × (MTBE+TAME)+(0.358/3.55) × ETOH+(0.137/2.7) × (ETBE+ETAE)]

ACET=0.00891 × EXHVOCS1 × 1000 × [1+(0.078/2.7) × (MTBE+TAME)+(0.865/3.55) × ETOH+(0.867/2.7) × (ETBE+ETAE)]

(ii) When calculating formaldehyde and acetaldehyde emissions using the equations in paragraph (b)(3)(i) of this section, oxygen in the form of alcohols which are more complex or have higher molecular weights than ethanol shall be evaluated as if it were in the form of ethanol. Oxygen in the form of methyl ethers other than TAME and MTBE shall be evaluated as if it were in the form of MTBE. Oxygen in the form of ethyl ethers other than ETBE shall be evaluated as if it were in the form of ETBE. Oxygen in the form of non-methyl, non-ethyl ethers shall be evaluated as if it were in the form of ETBE. Oxygen in the form of methanol or non-alcohol, non-ether oxygenates shall not be evaluated with the Simple Model, but instead must be evaluated through vehicle testing under the Complex Model per § 80.48.

(4) If the fuel aromatics content of the fuel in question is less than 10 volume percent, then an FAROM value of 10 volume percent shall be used when

evaluating the toxics emissions equations given in paragraphs (b)(1), (b)(2), and (b)(3) of this section.

(c) *Limits of the model.* (1) The model given in paragraphs (a) and (b) of this section shall be used as given to determine VOC and toxics emissions, respectively, if the properties of the fuel being evaluated fall within the ranges shown in this paragraph (c). If the properties of the fuel being evaluated fall outside the range shown in this paragraph (c), the model may not be used to determine the VOC or toxics performance of the fuel:

Fuel parameter	Range
Benzene content	0.0–4.9 vol %.
RVP	6.6–9.0 psi.[1]
Oxygenate content	0–4.0 wt %.
Aromatics content	0–55 vol %.

[1] For gasoline sold in California, the applicable RVP range shall be 6.4–9.0 psi.

(2) The model given in paragraphs (a) and (b) of this section shall be effective from January 1, 1995 through December 31, 1997, unless extended by action of the Administrator.

[59 FR 7813, Feb. 16, 1994, as amended at 59 FR 36958, July 20, 1994; 61 FR 20738, May 8, 1996]

§§ 80.43—80.44 [Reserved]

§ 80.45 Complex emissions model.

(a) *Definition of terms.* For the purposes of this section, the following definitions shall apply:

Target fuel=The fuel which is being evaluated for its emissions performance using the complex model

OXY=Oxygen content of the target fuel in terms of weight percent

SUL=Sulfur content of the target fuel in terms of parts per million by weight

RVP=Reid Vapor Pressure of the target fuel in terms of pounds per square inch

E200=200 °F distillation fraction of the target fuel in terms of volume percent

E300=300 °F distillation fraction of the target fuel in terms of volume percent

ARO=Aromatics content of the target fuel in terms of volume percent

BEN=Benzene content of the target fuel in terms of volume percent

OLE=Olefins content of the target fuel in terms of volume percent

MTB=Methyl tertiary butyl ether content of the target fuel in terms of weight percent oxygen

ETB=Ethyl tertiary butyl ether content of the target fuel in terms of weight percent oxygen

TAM=Tertiary amyl methyl ether content of the target fuel in terms of weight percent oxygen

ETH=Ethanol content of the target fuel in terms of weight percent oxygen

exp=The function that raises the number e (the base of the natural logarithm) to the power in its domain

Phase I=The years 1995–1999

Phase II=Year 2000 and beyond

(b) *Weightings and baselines for the complex model.* (1) The weightings for normal and higher emitters (w_1 and w_2, respectively) given in Table 1 shall be used to calculate the exhaust emission performance of any fuel for the appropriate pollutant and Phase:

TABLE 1—NORMAL AND HIGHER EMITTER WEIGHTINGS FOR EXHAUST EMISSIONS

	Phase I		Phase II	
	VOC & toxics	NO_X	VOC & toxics	NO_X
Normal Emitters (w_1)	0.52	0.82	0.444	0.738
Higher Emitters (w_2)	0.48	0.18	0.556	0.262

(2) The following properties of the baseline fuels shall be used when determining baseline mass emissions of the various pollutants:

TABLE 2—SUMMER AND WINTER BASELINE FUEL PROPERTIES

Fuel property	Summer	Winter
Oxygen (wt %)	0.0	0.0
Sulfur (ppm)	339	338
RVP (psi)	8.7	11.5
E200 (%)	41.0	50.0
E300 (%)	83.0	83.0
Aromatics (vol %)	32.0	26.4
Olefins (vol %)	9.2	11.9
Benzene (vol %)	1.53	1.64

(3) The baseline mass emissions for VOC, NO_X and toxics given in Tables 3, 4 and 5 of this paragraph (b)(3) shall be used in conjunction with the complex model during the appropriate Phase and season:

TABLE 3—BASELINE EXHAUST EMISSIONS

Exhaust pollutant	Phase I		Phase II	
	Summer (mg/mile)	Winter (mg/mile)	Summer (mg/mile)	Winter (mg/mile)
VOC	446.0	660.0	907.0	1341.0
NO_x	660.0	750.0	1340.0	1540.0
Benzene	26.10	37.57	53.54	77.62
Acetaldehyde	2.19	3.57	4.44	7.25
Formaldehyde ...	4.85	7.73	9.70	15.34

TABLE 3—BASELINE EXHAUST EMISSIONS—Continued

Exhaust pollutant	Phase I		Phase II	
	Summer (mg/mile)	Winter (mg/mile)	Summer (mg/mile)	Winter (mg/mile)
1,3-Butadiene ..	4.31	7.27	9.38	15.84
POM	1.50	2.21	3.04	4.50

TABLE 4—BASELINE NON-EXHAUST EMISSIONS (SUMMER ONLY)

Non-exhaust pollutant	Phase I		Phase II	
	Region 1 (mg/mile)	Region 2 (mg/mile)	Region 1 (mg/mile)	Region 2 (mg/mile)
VOC	860.48	769.10	559.31	492.07
Benzene	9.66	8.63	6.24	5.50

TABLE 5—TOTAL BASELINE VOC, NO_X AND TOXICS EMISSIONS

Pollutant	Summer (mg/mile)				Winter (mg/mile)			
	Phase I		Phase II		Phase I		Phase II	
	Region 1	Region 2	Region 1	Region 2	Region 1	Region 2	Region 1	Region 2
NO_X	660.0	660.0	1340.0	1340.0	750.0	750.0	1540.0	1540.0
VOC	1306.5	1215.1	1466.3	1399.1	660.0	660.0	1341.0	1341.0
Toxics	48.61	47.58	86.34	85.61	58.36	58.36	120.55	120.55

(c) *VOC performance.* (1) The exhaust VOC emissions performance of gasolines shall be given by the following equations:

$$VOCE = VOC(b) + (VOC(b) \times Y_{voc}(t)/100)$$

$$Y_{voc}(t) = [(w_1 \times N_v) + (w_2 \times H_v) - 1] \times 100$$

where

VOCE=Exhaust VOC emissions in milligrams/mile

$Y_{voc}(t)$=Exhaust VOC performance of the target fuel in terms of percentage change from baseline

VOC(b)=Baseline exhaust VOC emissions as defined in paragraph (b)(2) of this section for the appropriate Phase and season

$N_v = [\exp v_1(t)]/[\exp v_1(b)]$

$H_v = [\exp v_2(t)]/[\exp v_2(b)]$

w_1=Weighting factor for normal emitters as defined in paragraph (b)(1) of this section for the appropriate Phase

w_2=Weighting factor for higher emitters as defined in paragraph (b)(1) of this section for the appropriate Phase

$v_1(t)$=Normal emitter VOC equation as defined in paragraph (c)(1)(i) of this section, evaluated using the target fuel's properties subject to paragraphs (c)(1) (iii) and (iv) of this section

$v_2(t)$=Higher emitter VOC equation as defined in paragraph (c)(1)(ii) of this section, evaluated using the target fuel's properties subject to paragraphs (c)(1) (iii) and (iv) of this section

$v_1(b)$=Normal emitter VOC equation as defined in paragraph (c)(1)(i) of this section, evaluated using the base fuel's properties

$v_2(b)$=Higher emitter VOC equation as defined in paragraph (c)(1)(ii) of this section, evaluated using the base fuel's properties

(i) *Consolidated VOC equation for normal emitters.*

$$v_1 = (-0.003641 \times OXY) + (0.0005219 \times SUL) + (0.0289749 \times RVP) + (-0.014470 \times E200) + (-0.068624 \times E300) + (0.0323712 \times ARO) + (-0.002858 \times OLE) + (0.0001072 \times E2002) + (0.0004087 \times E3002) + (-0.0003481 \times ARO \times E300)$$

(ii) *VOC equation for higher emitters.*

$$v_2=(-0.003626\times OXY) + (-5.40X10^{-5}\times SUL) + (0.043295\times RVP) + (-0.013504\times E200) + (-0.062327\times E300) + (0.0282042\times ARO) + (-0.002858\times OLE) + (0.000106\times E200^2) + (0.000408\times E300^2) + (-0.000287\times ARO\times E300)$$

(iii) *Flat line extrapolations.* (A) During Phase I, fuels with E200 values greater than 65.83 percent shall be evaluated with the E200 fuel parameter set equal to 65.83 percent when calculating $Y_{voc}(t)$ and VOCE using the equations described in paragraphs (c)(1) (i) and (ii) of this section. Fuels with E300 values greater than E300* (calculated using the equation E300*=80.32+[0.390×ARO]) shall be evaluated with the E300 parameter set equal to E300* when calculating VOCE using the equations described in paragraphs (c)(1) (i) and (ii) of this section. For E300* values greater than 94, the linearly extrapolated model presented in paragraph (c)(1)(iv) of this section shall be used.

(B) During Phase II, fuels with E200 values greater than 65.52 percent shall be evaluated with the E200 fuel parameter set equal to 65.52 percent when calculating VOCE using the equations described in paragraphs (c)(1) (i) and (ii) of this section. Fuels with E300 values greater than E300* (calculated using the equation E300*=79.75+[0.385 ×ARO]) shall be evaluated with the E300 parameter set equal to E300* when calculating VOCE using the equations described in paragraphs (c)(1) (i) and (ii) of this section. For E300* values greater than 94, the linearly extrapolated model presented in paragraph (c)(1)(iv) of this section shall be used.

(iv) *Linear extrapolations.* (A) The equations in paragraphs (c)(1) (i) and (ii) of this section shall be used within the allowable range of E300, E200, and ARO for the appropriate Phase, as defined in Table 6:

TABLE 6—ALLOWABLE RANGES OF E200, E300, AND ARO FOR THE EXHAUST VOC EQUATIONS IN PARAGRAPHS (c)(1)(i) and (ii) OF THIS SECTION

Fuel parameter	Phase I		Phase II	
	Lower limit	Higher limit	Lower limit	Higher limit
E200 ...	33.00	65.83	33.00	65.52
E300 ...	72.00	Variable[1]	72.00	Variable[2]
ARO ...	18.00	46.00	18.00	46.00

[1] Higher E300 limit=lower of 94.0 or 80.32+[0.390×(ARO)].
[2] Higher E300 limit=lower of 94.0 or 79.75+[0.385×(ARO)].

(B) For fuels with E200, E300, and/or ARO levels outside the ranges defined in Table 6, $Y_{VOC}(t)$ shall be defined as:

For Phase I:

$$Y_{VOC}(t)=100\%\times 0.52\times[\exp(v_1(et))/\exp(v1(b))-1] +100\%\times 0.48\times[\exp(v_2(et))/\exp(v_2(b))-1] +\{100\%-0.52\times[\exp(v_1(et))/\exp(v_1(b))] \times\{[(0.0002144\times E200_{et})-0.014470]\times\Delta E200\} +\{[(0.0008174\times E300_{et})-0.068624 -(0.000348\times ARO_{et})]\times\Delta E300\} +\{[(-0.000348\times E300_{et})+0.0323712]\times\Delta ARO\}]\} +\{100\%\times 0.48\times[\exp(v_2(et))/\exp(v2(b))] \times[\{[(0.000212\times E200_{et})-0.01350]\times\Delta E200\} +\{[(0.000816\times E300_{et})-0.06233 -(0.00029\times ARO_{et})]\times\Delta E300\} +\{[(-0.00029\times E300_{et})+0.028204]\times\Delta ARO\}]\}$$

For Phase II:

$$Y_{VOC}(t)=100\%\times 0.444\times[\exp(v_1(et))/\exp(v_1(b))-1] +100\%\times 0.556\times[\exp(v_2(et))/\exp(v_2(b))-1] +\{100\%\times 0.444\times[\exp(v_1(et))/\exp(v_1(b))] \times[\{[(0.0002144\times E200_{et})-0.014470]\times\Delta E200\} +\{[(0.0008174\times E300_{et})-0.068624 -(0.000348\times ARO_{et})]\times\Delta E300\} +\{[(-0.000348\times E300_{et})+0.0323712]\times\Delta ARO\}]\} +\{100\%\times 0.556\times[\exp(v_2(et))/\exp(v_2(b))] \times[\{[(0.000212\times E200_{et})-0.01350]]\times\Delta E200\} +\{[(0.000816\times E300_{et})-0.06233 -(0.00029\times ARO_{et})]\times\Delta E300\} +\{[(-0.00029\times E300_{et})+0.028204]\times\Delta ARO\}]\}$$

where

v_1, v_2=The equations defined in paragraphs (c)(1) (i) and (ii) of this section

et=Collection of fuel parameters for the ''edge target'' fuel. These parameters are defined in paragraphs (c)(1)(iv)(C) and (D) of this section

$v_1(et)$=The function v_1 evaluated with ''edge target'' fuel parameters, which are defined in paragraphs (c)(1)(iv)(C) and (D) of this section

$v_2(et)$=The function v_2 evaluated with ''edge target'' fuel parameters, which are defined in paragraphs (c)(1)(iv)(C) and (D) of this section

$v_1(b)$=The function v_1 evaluated with the appropriate baseline fuel defined in paragraph (b)(2) of this section

$v_2(b)$=The function v_2 evaluated with the appropriate baseline fuel defined in paragraph (b)(2) of this section

$E200_{et}$=The value of E200 for the ''edge target'' fuel, as defined in paragraphs (c)(1)(iv)(C) and (D) of this section

$E300_{et}$=The value of E300 for the ''edge target'' fuel, as defined in paragraphs (c)(1)(iv)(C) and (D) of this section

ARO_{et}=The value of ARO for the ''edge target'' fuel, as defined in paragraphs (c)(1)(iv)(C) and (D) of this section.

(C) During Phase I, the ''edge target'' fuel shall be identical to the target fuel for all fuel parameters, with the following exceptions:

(1) If the E200 level of the target fuel is less than 33 volume percent, then the E200 value for the ''edge target'' fuel shall be set equal to 33 volume percent.

(2) If the aromatics level of the target fuel is less than 18 volume percent, then the ARO value for the ''edge target'' fuel shall be set equal to 18 volume percent.

(3) If the aromatics level of the target fuel is greater than 46 volume percent, then the ARO value for the ''edge target'' fuel shall be set equal to 46 volume percent.

(4) If the E300 level of the target fuel is less than 72 volume percent, then the E300 value for the ''edge target'' fuel shall be set equal to 72 volume percent.

(5) If the E300 level of the target fuel is greater than 95 volume percent, then the E300 value of the target fuel shall be set equal to 95 volume percent for the purposes of calculating VOC emissions with the Phase I equation given in paragraph (c)(1)(iv)(B) of this section.

(6) If [80.32+(0.390×ARO)] exceeds 94 for the target fuel, then the E300 value for the ''edge target'' fuel shall be set equal to 94 volume percent.

(7) If the E200 level of the target fuel is less than 33 volume percent, then Δ E200 shall be set equal to (E200−33 volume percent).

(8) If the E200 level of the target fuel equals or exceeds 33 volume percent, then Δ E200 shall be set equal to zero.

(9) If the aromatics level of the target fuel is less than 18 volume percent, then Δ ARO shall be set equal to (ARO−18 volume percent). If the aromatics level of the target fuel is less than 10 volume percent, then Δ ARO shall be set equal to −8 volume percent.

(10) If the aromatics level of the target fuel is greater than 46 volume percent, then Δ ARO shall be set equal to (ARO−46 volume percent).

(11) If neither of the conditions established in paragraphs (c)(1)(iv)(C)*(9)* and *(10)* of this section are met, then Δ ARO shall be set equal to zero.

(12) If the E300 level of the target fuel is less than 72 percent, then Δ E300 shall be set equal to (E300−72 percent).

(13) If the E300 level of the target fuel is greater than 94 volume percent and [80.32+(0.390xARO)] also is greater than 94, then Δ E300 shall be set equal to (E300−94 volume percent). If the E300 level of the target fuel is greater than 95 volume percent and [80.32+(0.390×ARO)] also is greater than 94, then Δ E300 shall be set equal to 1 volume percent.

(14) If neither of the conditions established in paragraphs (c)(1)(iv)(C)*(12)* and *(13)* of this section are met, then Δ E300 shall be set equal to zero.

(D) During Phase II, the ''edge target'' fuel is identical to the target fuel for all fuel parameters, with the following exceptions:

(1) If the E200 level of the target fuel is less than 33 volume percent, then the E200 value for the ''edge target'' fuel shall be set equal to 33 volume percent.

(2) If the aromatics level of the target fuel is less than 18 volume percent, then the ARO value for the ''edge target'' fuel shall be set equal to 18 volume percent.

(3) If the aromatics level of the target fuel is greater than 46 volume percent, then the ARO value for the ''edge target'' fuel shall be set equal to 46 volume percent.

(4) If the E300 level of the target fuel is less than 72 volume percent, then the E300 value for the ''edge target'' fuel shall be set equal to 72 volume percent.

(5) If the E300 level of the target fuel is greater than 95 volume percent, then the E300 value of the target fuel shall be set equal to 95 volume percent for the purposes of calculating VOC emissions with the Phase II equation given in paragraph (c)(1)(iv)(B) of this section.

(6) If [79.75+(0.385×ARO)] exceeds 94 for the target fuel, then the E300 value for the ''edge target'' fuel shall be set equal to 94 volume percent.

(7) If the E200 level of the target fuel is less than 33 volume percent, then Δ E200 shall be set equal to (E200−33 volume percent).

(8) If the E200 level of the target fuel equals or exceeds 33 volume percent, then Δ E200 shall be set equal to zero.

(9) If the aromatics level of the target fuel is less than 18 volume percent and greater than or equal to 10 volume percent, then Δ ARO shall be set equal to (ARO−18 volume percent). If the aromatics level of the target fuel is less than 10 volume percent, then Δ ARO shall be set equal to −8 volume percent.

(10) If the aromatics level of the target fuel is greater than 46 volume percent, then Δ ARO shall be set equal to (ARO−46 volume percent).

(11) If neither of the conditions established in paragraphs (c)(1)(iv)(D)(9) and (10) of this section are met, then Δ ARO shall be set equal to zero.

(12) If the E300 level of the target fuel is less than 72 percent, then Δ E300 shall be set equal to (E300)×72 percent).

(13) If the E300 level of the target fuel is greater than 94 volume percent and [80.32+(0.390×ARO)] also is greater than 94, then Δ E300 shall be set equal to (E300 −94 volume percent). If the E300 level of the target fuel is greater than 95 volume percent and [79.75+(0.385×ARO)] also is greater than 94, then Δ E300 shall be set equal to 1 volume percent.

(14) If neither of the conditions established in paragraphs (c)(1)(iv)(D)(12) and (13) of this section are met, then Δ E300 shall be set equal to zero.

(2) The winter exhaust VOC emissions performance of gasolines shall be given by the equations presented in paragraph (c)(1) of this section with the RVP value set to 8.7 psi for both the baseline and target fuels.

(3) The nonexhaust VOC emissions performance of gasolines in VOC Control Region 1 shall be given by the following equations, where:

VOCNE1=Total nonexhaust emissions of volatile organic compounds in VOC Control Region 1 in grams per mile

VOCDI1=Diurnal emissions of volatile organic compounds in VOC Control Region 1 in grams per mile

VOCHS1=Hot soak emissions of volatile organic compounds in VOC Control Region 1 in grams per mile

VOCRL1=Running loss emissions of volatile organic compounds in VOC Control Region 1 in grams per mile

VOCRF1=Refueling emissions of volatile organic compounds in VOC Control Region 1 in grams per mile

(i) During Phase I:

$$VOCNE1=VOCDI1+VOCHS1+VOCRL1+VOCRF1$$

$$VOCDI1=[0.00736 \times (RVP^2)]-[0.0790 \times RVP]+0.2553$$

$$VOCHS1=[0.01557 \times (RVP^2)]-[0.1671 \times RVP]+0.5399$$

$$VOCRL1=[0.00279 \times (RVP^2)]+[0.1096 \times RVP]-0.7340$$

$$VOCRF1=[0.006668 \times RVP]-0.0180$$

(ii) During Phase II:

$$VOCNE1=VOCDI1+VOCHS1+VOCRL1+VOCRF1$$

$$VOCDI1=[0.007385 \times (RVP^2)]-[0.08981 \times RVP]+0.3158$$

$$VOCHS1=[0.006654 \times (RVP^2)]-[0.08094 \times RVP]+0.2846$$

$$VOCRL1=[0.017768 \times (RVP^2)]-[0.18746 \times RVP]+0.6146$$

$$VOCRF1=[0.004767 \times RVP]+0.011859$$

(4) The nonexhaust VOC emissions performance of gasolines in VOC Control Region 2 shall be given by the following equations, where:

VOCNE2=Total nonexhaust emissions of volatile organic compounds in VOC Control Region 2 in grams per mile

VOCDI2=Diurnal emissions of volatile organic compounds in VOC Control Region 2 in grams per mile

VOCHS2=Hot soak emissions of volatile organic compounds in VOC Control Region 2 in grams per mile

VOCRL2=Running loss emissions of volatile organic compounds in VOC Control Region 2 in grams per mile

VOCRF2=Refueling emissions of volatile organic compounds in VOC Control Region 2 in grams per mile

(i) During Phase I:

VOCNE2=VOCDI2+VOCHS2 +VOCRL2+VOCRF2

VOCDI2=[0.006818 × (RVP²)]−[0.07682 × RVP]+0.2610

VOCHS2=[0.014421 × (RVP²)]−[0.16248 × RVP]+0.5520

VOCRL2=[0.016255 × (RVP²)]−[0.1306 × RVP]+0.2963

VOCRF2=[0.006668 × RVP]−0.0180

(ii) During Phase II:

VOCNE2=VOCDI2+VOCHS2+ VOCRL2+VOCRF2

VOCDI2=[0.004775 × (RVP²)]−[0.05872 × RVP]+0.21306

VOCHS2=[0.006078 × (RVP²)]−[0.07474 × RVP]+0.27117

VOCRL2=[0.016169 × (RVP²)] −[0.17206 × RVP]+0.56724

VOCRF2=[0.004767 × RVP]+0.011859

(5) Winter VOC emissions shall be given by VOCE, as defined in paragraph (c)(2) of this section, using the appropriate baseline emissions given in paragraph (b)(3) of this section. Total nonexhaust VOC emissions shall be set equal to zero under winter conditions.

(6) *Total VOC emissions.* (i) Total summer VOC emissions shall be given by the following equations:

VOCS1=(VOCE/1000)+VOCNE1

VOCS2=(VOCE/1000)+VOCNE2

VOCS1=Total summer VOC emissions in VOC Control Region 1 in terms of grams per mile

VOCS2=Total summer VOC emissions in VOC Control Region 2 in terms of grams per mile

(ii) Total winter VOC emissions shall be given by the following equations:

VOCW=(VOCE/1000)

VOCW=Total winter VOC emissions in terms of grams per mile

(7) *Phase I total VOC emissions performance.* (i) The total summer VOC emissions performance of the target fuel in percentage terms from baseline levels shall be given by the following equations during Phase I:

VOCS1%=[100% × (VOCS1−1.306 g/mi)]/ (1.306 g/mi)

VOCS2%=[100% × (VOCS2−1.215 g/mi)]/ (1.215 g/mi)

VOC1%=Percentage change in VOC emissions from baseline levels in VOC Control Region 1

VOC2%=Percentage change in VOC emissions from baseline levels in VOC Control Region 2

(ii) The total winter VOC emissions performance of the target fuel in percentage terms from baseline levels shall be given by the following equations during Phase I:

VOCW%=[100% × (VOCW−0.660 g/mi)]/ (0.660 g/mi)

VOCW%=Percentage change in winter VOC emissions from baseline levels

(8) *Phase II total VOC emissions performance.* (i) The total summer VOC emissions performance of the target fuel in percentage terms from baseline levels shall be given by the following equations during Phase II:

VOCS1%=[100% × (VOCS1−1.4663 g/mi)]/ (1.4663 g/mi)

VOCS2%=[100% × (VOCS2−1.3991 g/mi)]/ (1.3991 g/mi)

(ii) The total winter VOC emissions performance of the target fuel in percentage terms from baseline levels shall be given by the following equation during Phase II:

VOCW%=[100% × (VOC −1.341 g/mi)] / (1.341 g/mi)

(d) *NO_X performance.* (1) The summer NO_X emissions performance of gasolines shall be given by the following equations:

$NO_X=NO_X(b)+[NO_X(b) \times Y(t)/100]$

$Y_{NOX}(t)=\beta(w_1 \times N_n)+(w_2 \times H_n)-1\alpha \times 100$

where

NO_X=NO_X emissions in milligrams/mile

$Y_{NOx}(t)$=NO_X performance of target fuel in terms of percentage change from baseline

$NO_X(b)$=Baseline NO_X emissions as defined in paragraph (b)(2) of this section for the appropriate phase and season

$N_n=\exp n_1(t)/\exp n_1(b)$

$H_n=\exp n_2(t)/\exp n_2(b)$

w_1=Weighting factor for normal emitters as defined in paragraph (b)(1) of this section for the appropriate Phase

w_2=Weighting factor for higher emitters as defined in paragraph

(b)(1) of this section for the appropriate Phase

$n_1(t)$=Normal emitter NO_X equation as defined in paragraph (d)(1)(i) of this section, evaluated using the target fuel's properties subject to paragraphs (d)(1)(iii) and (iv) of this section

$n_2(t)$=Higher emitter NO_X equation as defined in paragraph (d)(1)(ii) of this section, evaluated using the target fuel's properties subject to paragraphs (d)(1)(iii) and (iv) of this section

$n_1(b)$=Normal emitter NO_X equation as defined in paragraph (d)(1)(i) of this section, evaluated using the base fuel's properties

$n_2(b)$=Higher emitter NO_X equation as defined in paragraph (d)(1)(ii) of this section, evaluated using the base fuel's properties

(i) *Consolidated equation for normal emitters.*

$$n_1=(0.0018571\times OXY)+(0.0006921\times SUL)+(0.0090744\times RVP)+(0.0009310\times E200)+(0.0008460\times E300)+(0.0083632\times ARO)+(-0.002774\times OLE)+(-6.63X10^{-7}\times SUL^2)+(-0.000119\times ARO^2)+(0.0003665\times OLE^2)$$

(ii) *Equation for higher emitters.*

$$n_2=(-0.00913\times OXY)+(0.000252\times SUL)+(-0.01397\times RVP)+(0.000931\times E200)+(-0.00401\times E300)+(0.007097\times ARO)+(-0.00276\times OLE)+(0.0003665\times OLE^2)+(-7.995x10^{-5}\times ARO^2)$$

(iii) *Flat line extrapolations.* (A) During Phase I, fuels with olefin levels less than 3.77 volume percent shall be evaluated with the OLE fuel parameter set equal to 3.77 volume percent when calculating NO_X performance using the equations described in paragraphs (d)(1)(i) and (ii) of this section. Fuels with aromatics levels greater than 36.2 volume percent shall be evaluated with the ARO fuel parameter set equal to 36.2 volume percent when calculating NO_X performance using the equations described in paragraphs (d)(1)(i) and (ii) of this section.

(B) During Phase II, fuels with olefin levels less than 3.77 volume percent shall be evaluated with the OLE fuel parameter set equal to 3.77 volume percent when calculating NO_X performance using the equations described in paragraphs (d)(1)(i) and (ii) of this section. Fuels with aromatics levels greater than 36.8 volume percent shall be evaluated with the ARO fuel parameter set equal to 36.8 volume percent when calculating NO_X performance using the equations described in paragraphs (d)(1)(i) and (ii) of this section.

(iv) *Linear extrapolations.* (A) The equations in paragraphs (d)(1)(i) and (ii) of this section shall be used within the allowable range of SUL, OLE, and ARO for the appropriate Phase, as defined in the following Table 7:

TABLE 7—ALLOWABLE RANGES OF SUL, OLE, AND ARO FOR THE NO_X EQUATIONS IN PARAGRAPHS/(d)(1)(i) AND (ii) OF THIS SECTION

Fuel parameter	Phase I		Phase II	
	Low end	High end	Low end	High end
SUL	10.0	450.0	10.0	450.0
OLE	3.77	19.0	3.77	19.0
ARO	18.0	36.2	18.0	36.8

(B) For fuels with SUL, OLE, and/or ARO levels outside the ranges defined in Table 7 of paragraph (d)(2)(iv)(A) of this section, $Y_{nox}(t)$ shall be defined as:

For Phase I:

$$Y_{NOX}(t)=100\% \times 0.82 \times [\exp(n_1(et))/\exp(n_1(b)) - 1] +100\% \times 0.18 \times [\exp(n_2(et))/\exp(n_2(b)) - 1] +\{100\% \times 0.82 \times [\exp(n_1(et))/\exp(n_1(b))] \times [\{[(0.00000133 \times SUL_{et})+0.000692] \times \Delta SUL\} +\{[(-0.000238 \times ARO_{et})+0.0083632] \times \Delta ARO\} +\{[(0.000733 \times OLE_{et}) - 0.002774] \times \Delta OLE\}]\} +\{100\% \times 0.18 \times [\exp(n_2(et))/\exp(n_2(b))] \times [\{0.000252 \times \Delta\Sigma\theta\lambda\square + +\{[(-0.0001599 \times ARO\varepsilon\tau)+0.007097] \times \Delta ARO\} +\{[(0.000732 \times OLE_{et}) - 0.00276] \times \Delta OLE\}]\}$$

For Phase II:

$$Y_{nox}(t)=100\% \times 0.738 \times [\exp(n_1(et))/\exp(n_1(b)) - 1]$$

$+100\% \times 0.262 \times [\exp(n_2(et))/\exp(n_2(b)) - 1]$
$+\{100\% \times 0.738 \times [\exp(n_1(et))/\exp(n_1(b))]$
$\times [\{[(-0.00000133 \times SUL_{et})+0.000692] \times \Delta SUL\}$
$+\{[(-0.000238 \times ARO_{et})+0.0083632] \times \Delta ARO\}$
$+\{[(0.000733 \times OLE_{et}) - 0.002774] \times \Delta OLE\}]\}$
$+\{100\% \times 0.262 \times [\exp(n_2(et))/\exp(n_2(b))]$
$\times [\{0.000252 \times \Delta SUL\}+$
$+\{[(-0.0001599 \times ARO_{et})+0.007097] \times \Delta ARO\}$
$+\{[(0.000732 \times OLE_{et}) - 0.00276] \times \Delta OLE\}]\}$

where

n_1, n_2=The equations defined in paragraphs (d)(1) (i) and (ii) of this section.

et=Collection of fuel parameters for the ''edge target'' fuel. These parameters are defined in paragraphs (d)(1)(iv) (C) and (D) of this section.

$n_1(et)$=The function n_1 evaluated with ''edge target'' fuel parameters, which are defined in paragraph (d)(1)(iv)(C) of this section.

$n_2(et)$=The function n_2 evaluated with ''edge target'' fuel parameters, which are defined in paragraph (d)(1)(iv)(C) of this section.

$n_1(b)$=The function n_1 evaluated with the appropriate baseline fuel parameters defined in paragraph (b)(2) of this section.

$n_2(b)$=The function n_2 evaluated with the appropriate baseline fuel parameters defined in paragraph (b)(2) of this section.

SUL_{et}=The value of SUL for the ''edge target'' fuel, as defined in paragraph (d)(1)(iv)(C) of this section.

ARO_{et}=The value of ARO for the ''edge target'' fuel, as defined in paragraph (d)(1)(iv)(C) of this section.

OLE_{et}=The value of OLE for the ''edge target'' fuel, as defined in paragraph (d)(1)(iv)(C) of this section.

(C) For both Phase I and Phase II, the ''edge target'' fuel is identical to the target fuel for all fuel parameters, with the following exceptions:

(1) If the sulfur level of the target fuel is less than 10 parts per million, then the value of SUL for the ''edge target'' fuel shall be set equal to 10 parts per million.

(2) If the sulfur level of the target fuel is greater than 450 parts per million, then the value of SUL for the ''edge target'' fuel shall be set equal to 450 parts per million.

(3) If the aromatics level of the target fuel is less than 18 volume percent, then the value of ARO for the ''edge target'' fuel shall be set equal to 18 volume percent.

(4) If the olefins level of the target fuel is greater than 19 volume percent, then the value of OLE for the ''edge target'' fuel shall be set equal to 19 volume percent.

(5) If the E300 level of the target fuel is greater than 95 volume percent, then the E300 value of the target fuel shall be set equal to 95 volume percent for the purposes of calculating NO_X emissions with the equations given in paragraph (d)(1)(iv)(B) of this section.

(6) If the sulfur level of the target fuel is less than 10 parts per million, then Δ SUL shall be set equal to (SUL − 10 parts per million).

(7) If the sulfur level of the target fuel is greater than 450 parts per million, then Δ SUL shall be set equal to (SUL − 450 parts per million).

(8) If the sulfur level of the target fuel is neither less than 10 parts per million nor greater than 450 parts per million, Δ SUL shall be set equal to zero.

(9) If the aromatics level of the target fuel is less than 18 volume percent and greater than 10 volume percent, then Δ ARO shall be set equal to (ARO − 18 volume percent). If the aromatics level of the target fuel is less than 10 volume percent, then Δ ARO shall be set equal to −8 volume percent.

(10) If the aromatics level of the target fuel is greater than or equal to 18 volume percent, then Δ ARO shall be set equal to zero.

(11) If the olefins level of the target fuel is greater than 19 volume percent, then Δ OLE shall be set equal to (OLE − 19 volume percent).

(12) If the olefins level of the target fuel is less than or equal to 19 volume percent, then Δ OLE shall be set equal to zero.

(2) The winter NO_X emissions performance of gasolines shall be given by the equations presented in paragraph (d)(1) of this section with the RVP value set to 8.7 psi.

(3) The NO_X emissions performance of the target fuel in percentage terms from baseline levels shall be given by the following equations:

For Phase I:

Summer $NO_X\%=[100\% \times (NO_X-0.660\ g/mi)]/(0.660\ g/mi)$

Winter $NO_X\%=[100\% \times (NO_X-0.750\ g/mi)]/(0.750\ g/mi)$

For Phase II:

Summer $NO_X\%=[100\% \times (NO_X-1.340\ g/mi)]/(1.340\ g/mi)$

Winter $NO_X\%=[100\% \times (NO_X-1.540\ g/mi)]/(1.540\ g/mi)$

Summer $NO_X\%$=Percentage change in NO_X emissions from summer baseline levels

Winter $NO_X\%$=Percentage change in NO_X emissions from winter baseline levels

(e) *Toxics performance*—(1) *Summer toxics performance.* (i) Summer toxic emissions performance of gasolines in VOC Control Regions 1 and 2 shall be given by the following equations:

TOXICS1=EXHBZ + FORM + ACET + BUTA + POM + NEBZ1

TOXICS2=EXHBZ + FORM + ACET + BUTA + POM + NEBZ2

where

TOXICS1=Summer toxics performance in VOC Control Region 1 in terms of milligrams per mile.

TOXICS2=Summer toxics performance in VOC Control Region 2 in terms of milligrams per mile.

EXHBZ=Exhaust emissions of benzene in terms of milligrams per mile, as determined in paragraph (e)(4) of this section.

FORM=Emissions of formaldehyde in terms of milligrams per mile, as determined in paragraph (e)(5) of this section.

ACET=Emissions of acetaldehyde in terms of milligrams per mile, as determined in paragraph (e)(6) of this section.

BUTA=Emissions of 1,3-butadiene in terms of milligrams per mile, as determined in paragraph (e)(7) of this section.

POM=Polycyclic organic matter emissions in terms of milligrams per mile, as determined in paragraph (e)(8) of this section.

NEBZ1=Nonexhaust emissions of benzene in VOC Control Region 1 in milligrams per mile, as determined in paragraph (e)(9) of this section.

NEBZ2=Nonexhaust emissions of benzene in VOC Control Region 2 in milligrams per mile, as determined in paragraph (e)(10) of this section.

(ii) The percentage change in summer toxics performance in VOC Control Regions 1 and 2 shall be given by the following equations:

For Phase I:

$TOXICS1\%=[100\% \times (TOXICS1-48.61\ mg/mi)]/(48.61\ mg/mi)$

$TOXICS2\% = [100\% \times (TOXICS2 - 47.58\ mg/mi)] / (47.58\ mg/mi)$

For Phase II:

$TOXICS1\% = [100\% \times (TOXICS1 - 86.34\ mg/mi)] / (86.34\ mg/mi)$

$TOXICS2\%=[100\% \times (TOXICS2-85.61\ mg/mi)]/(85.61\ mg/mi)$

where

TOXICS1%=Percentage change in summer toxics emissions in VOC Control Region 1 from baseline levels.

TOXICS2%=Percentage change in summer toxics emissions in VOC Control Region 2 from baseline levels.

(2) *Winter toxics performance.* (i) Winter toxic emissions performance of gasolines in VOC Control Regions 1 and 2 shall be given by the following equation, evaluated with the RVP set at 8.7 psi:

TOXICW=[EXHBZ + FORM + ACET + BUTA + POM]

where

TOXICW=Winter toxics performance in VOC Control Regions 1 and 2 in terms of milligrams per mile.

EXHBZ=Exhaust emissions of benzene in terms of milligrams per mile, as determined in paragraph (e)(4) of this section.

FORM=Emissions of formaldehyde in terms of milligrams per mile, as determined in paragraph (e)(5) of this section.

ACET=Emissions of acetaldehyde in terms of milligrams per mile, as determined in paragraph (e)(6) of this section.

BUTA=Emissions of 1,3-butadiene in terms of milligrams per mile, as determined in paragraph (e)(7) of this section.

POM=Polycyclic organic matter emissions in terms of milligrams per mile, as determined in paragraph (e)(8) of this section.

(ii) The percentage change in winter toxics performance in VOC Control Regions 1 and 2 shall be given by the following equation:

For Phase I:

TOXICW%=[100%×(TOXICW−58.36 mg/mi)] / (58.36 mg/mi)

For Phase II:

TOXICW%=[100%×(TOXICW−120.55 mg/mi)] / (120.55 mg/mi)

where

TOXICW%=Percentage change in winter toxics emissions in VOC Control Regions 1 and 2 from baseline levels.

(3) The year-round toxics performance in VOC Control Regions 1 and 2 shall be derived from volume-weighted performances of individual batches of fuel as described in § 80.67(g).

(4) Exhaust benzene emissions shall be given by the following equation, subject to paragragh (e)(4)(iii) of this section:

$EXHBZ=BENZ(b) + (BENZ(b) \times Y_{BEN}(t)/100)$

$Y_{BEN}(t)=\beta(w_1 \times N_b) + (w_2 \times H_b) - 1\alpha \times 100$

where

EXHBZ=Exhaust benzene emissions in milligrams/mile

$Y_{BEN}(t)$=Benzene performance of target fuel in terms of percentage change from baseline.

BENZ(b)=Baseline benzene emissions as defined in paragraph (b)(2) of this section for the appropriate phase and season.

N_b=exp $b_1(t)$/exp $b_1(b)$

H_b=exp $b_2(t)$/exp $b_2(b)$

w_1=Weighting factor for normal emitters as defined in paragraph (b)(1) of this section for the appropriate Phase.

w_2=Weighting factor for higher emitters as defined in paragraph (b)(1) of this section for the appropriate Phase.

$b_1(t)$=Normal emitter benzene equation, as defined in paragraph (e)(4)(i) of this section, evaluated using the target fuel's properties subject to paragraph (e)(4)(iii) of this section.

$b_2(t)$=Higher emitter benzene equation as defined in paragraph (e)(4)(ii) of this section, evaluated using the target fuel's properties subject to paragraph (e)(4)(iii) of this section.

$b_1(b)$=Normal emitter benzene equation as defined in paragraph (e)(4)(i) of this section, evaluated for the base fuel's properties.

$b_2(b)$=Higher emitter benzene equation, as defined in paragraph (e)(4)(ii) of this section, evaluated for the base fuel's properties.

(i) *Consolidated equation for normal emitters.*

$b_1=(0.0006197\times SUL) + (-0.003376\times E200)+(0.0265500\times ARO) + (0.2223900\times BEN)$

(ii) *Equation for higher emitters.*

$b_2=(-0.096047\times OXY) + (0.0003370\times SUL) + (0.0112510\times E300) + (0.0118820\times ARO) + (0.2223180\times BEN)$

(iii) If the aromatics value of the target fuel is less than 10 volume percent, then an aromatics value of 10 volume percent shall be used when evaluating the equations given in paragraphs (e)(4)(i) and (ii) of this section. If the E300 value of the target fuel is greater than 95 volume percent, then an E300 value of 95 volume percent shall be used when evaluating the equations in paragraphs (e)(4)(i) and (ii) of this section.

(5) Formaldehyde mass emissions shall be given by the following equation, subject to paragraphs (e)(5) (iii) and (iv) of this section:

$FORM=FORM(b) + (FORM(b)\times Y_{FORM}(t)/100)$

$Y_{FORM}(t)=[(w_1\times N_f) + (w_2\times H_f)-1]\times 100$

where

FORM=Exhaust formaldehyde emissions in terms of milligrams/mile.

$Y_{FORM}(t)$=Formaldehyde performance of target fuel in terms of percentage change from baseline.

FORM(b)=Baseline formaldehyde emissions as defined in paragraph (b)(2)

of this section for the appropriate Phase and season.

N_f=exp $f_1(t)$/exp $f_1(b)$

H_f=exp $f_2(t)$/exp $f_2(b)$

w_1=Weighting factor for normal emitters as defined in paragraph (b)(1) of this section for the appropriate Phase.

w_2=Weighting factor for higher emitters as defined in paragraph (b)(1) of this section for the appropriate Phase.

$f_1(t)$=Normal emitter formaldehyde equation as defined in paragraph (e)(5)(i) of this section, evaluated using the target fuel's properties subject to paragraphs (e)(5) (iii) and (iv) of this section.

$f_2(t)$=Higher emitter formaldehyde equation as defined in paragraph (e)(5)(ii) of this section, evaluated using the target fuel's properties subject to paragraphs (e)(5) (iii) and (iv) of this section.

$f_1(b)$=Normal emitter formaldehyde equation as defined in paragraph (e)(5)(i) of this section, evaluated for the base fuel's properties.

$f_2(b)$=Higher emitter formaldehyde equation as defined in paragraph (e)(5)(ii) of this section, evaluated for the base fuel's properties.

(i) *Consolidated equation for normal emitters.*

$f_1=(-0.010226\times E300) + (-0.007166\times ARO) + (0.0462131\times MTB)$

(ii) *Equation for higher emitters.*

$f_2=(-0.010226\times E300) + (-0.007166\times ARO) + (-0.031352\times OLE) + (0.0462131\times MTB)$

(iii) If the aromatics value of the target fuel is less than 10 volume percent, then an aromatics value of 10 volume percent shall be used when evaluating the equations given in paragraphs (e)(5) (i) and (ii) of this section. If the E300 value of the target fuel is greater than 95 volume percent, then an E300 value of 95 volume percent shall be used when evaluating the equations given in paragraphs (e)(5) (i) and (ii) of this section.

(iv) When calculating formaldehyde emissions and emissions performance, oxygen in the form of alcohols which are more complex or have higher molecular weights than ethanol shall be evaluated as if it were in the form of ethanol. Oxygen in the form of methyl ethers other than TAME and MTBE shall be evaluated as if it were in the form of MTBE. Oxygen in the form of ethyl ethers other than ETBE shall be evaluated as if it were in the form of ETBE. Oxygen in the form of non-methyl, non-ethyl ethers shall be evaluated as if it were in the form of ETBE. Oxygen in the form of methanol or non-alcohol, non-ether oxygenates shall not be evaluated with the Complex Model, but instead must be evaluated through vehicle testing per § 80.48.

(6) Acetaldehyde mass emissions shall be given by the following equation, subject to paragraphs (e)(6) (iii) and (iv) of this section:

$ACET=ACET(b) + (ACET(b)\times Y_{ACET}(t)/100)$

$Y_{ACET}(t)=[(w_1\times N_a) + (w_2\times H_a)-1]\times 100$

where

ACET=Exhaust acetaldehyde emissions in terms of milligrams/mile

$Y_{ACET}(t)$=Acetaldehyde performance of target fuel in terms of percentage change from baseline

ACET(b)=Baseline acetaldehyde emissions as defined in paragraph (b)(2) of this section for the appropriate phase and season

N_a=exp $a_1(t)$/exp $a_1(b)$

H_a=exp $a_2(t)$/exp $a_2(b)$

w_1=Weighting factor for normal emitters as defined in paragraph (b)(1) of this section for the appropriate phase

w_2=Weighting factor for higher emitters as defined in paragraph (b)(1) of this section for the appropriate phase

$a_1(t)$=Normal emitter acetaldehyde equation as defined in paragraph (e)(6)(i) of this section, evaluated using the target fuel's properties, subject to paragraphs (e)(6) (iii) and (iv) of this section

$a_2(t)$=Higher emitter acetaldehyde equation as defined in paragraph (e)(6)(ii) of this section, evaluated using the target fuel's properties, subject to paragraphs (e)(6) (iii) and (iv) of this section

$a_1(b)$=Normal emitter acetaldehyde equation as defined in paragraph (e)(6)(i) of this section, evaluated for the base fuel's properties

$f_2(b)$=Higher emitter acetaldehyde equation as defined in paragraph

(e)(6)(ii) of this section, evaluated for the base fuel's properties

(i) *Consolidated equation for normal emitters.*

$a_1=(0.0002631\times SUL)+(0.0397860\times RVP)+(-0.012172\times E300)+(-0.005525\times ARO)+(-0.009594\times MTB)+(0.3165800\times ETB)+(0.2492500\times ETH)$

(ii) *Equation for higher emitters.*

$a_2=(0.0002627\times SUL)+(-0.012157\times E300)+(-0.005548\times ARO)+(-0.055980\times MTB)+(0.3164665\times ETB)+(0.2493259\times ETH)$

(iii) If the aromatics value of the target fuel is less than 10 volume percent, then an aromatics value of 10 volume percent shall be used when evaluating the equations given in paragraphs (e)(6)(i) and (ii) of this section. If the E300 value of the target fuel is greater than 95 volume percent, then an E300 value of 95 volume percent shall be used when evaluating the equations given in paragraphs (e)(6) (i) and (ii) of this section.

(iv) When calculating acetaldehyde emissions and emissions performance, oxygen in the form of alcohols which are more complex or have higher molecular weights than ethanol shall be evaluated as if it were in the form of ethanol. Oxygen in the form of methyl ethers other than TAME and MTBE shall be evaluated as if it were in the form of MTBE. Oxygen in the form of ethyl ethers other than ETBE shall be evaluated as if it were in the form of ETBE. Oxygen in the form of non-methyl, non-ethyl ethers shall be evaluated as if it were in the form of ETBE. Oxygen in the form of methanol or non-alcohol, non-ether oxygenates shall not be evaluated with the Complex Model, but instead must be evaluated through vehicle testing per § 80.48.

(7) 1,3-butadiene mass emissions shall be given by the following equations, subject to paragraph (e)(7)(iii) of this section:

$BUTA=BUTA(b)+(BUTA(b)\times Y_{BUTA}(t)/100)$

$Y_{BUTA}(t)=[(w_1\times N_d)+(w_2\times H_d)-1]\times 100$

where

BUTA=Exhaust 1,3-butadiene emissions in terms of milligrams/mile

$Y_{BUTA}(t)$=1,3-butadiene performance of target fuel in terms of percentage change from baseline

BUTA(b)=Baseline 1,3-butadiene emissions as defined in paragraph (b)(2) of this section for the appropriate phase and season

$N_d=\exp d_1(t)/\exp d_1(b)$

$H_d=\exp d_2(t)/\exp d_2(b)$

w_1=Weighting factor for normal emitters as defined in paragraph (b)(1) of this section for the appropriate phase

w_2=Weighting factor for higher emitters as defined in paragraph (b)(1) of this section for the appropriate Phase.

$d_1(t)$=Normal emitter 1,3-butadiene equation as defined in paragraph (e)(7)(i) of this section, evaluated using the target fuel's properties, subject to paragraph (e)(7)(iii) of this section.

$d_2(t)$=Higher emitter 1,3-butadiene equation as defined in paragraph (e)(7)(ii) of this section, evaluated using the target fuel's properties, subject to paragraph (e)(7)(iii) of this section.

$d_1(b)$=Normal emitter 1,3-butadiene equation as defined in paragraph (e)(7)(i) of this section, evaluated for the base fuel's properties.

$d_2(b)$=Higher emitter 1,3-butadiene equation as defined in paragraph (e)(7)(ii) of this section, evaluated for the base fuel's properties.

(i) *Consolidated equation for normal emitters.*

$d_1=(0.0001552\times SUL)+(-0.007253\times E200)+(-0.014866\times E300)+(-0.004005\times ARO)+(0.0282350\times OLE)$

(ii) *Equation for higher emitters.*

$d_2=(-0.060771\times OXY)+(-0.007311\times E200)+(-0.008058\times E300)+(-0.004005\times ARO)+(0.0436960\times OLE)$

(iii) If the aromatics value of the target fuel is less than 10 volume percent, then an aromatics value of 10 volume percent shall be used when evaluating the equations given in paragraphs (e)(7)(i) and (ii) of this section. If the E300 value of the target fuel is greater than 95 volume percent, then an E300 value of 95 volume percent shall be used when evaluating the equations given in paragraphs (e)(7) (i) and (ii) of this section.

(8) Polycyclic organic matter mass emissions shall be given by the following equation:

$POM=0.003355\times VOCE$

POM=Polycyclic organic matter emissions in terms of milligrams per mile

VOCE=Non-methane, non-ethane exhaust emissions of volatile organic compounds in grams per mile.

(9) Nonexhaust benzene emissions in VOC Control Region 1 shall be given by the following equations for both Phase I and Phase II:

$$NEBZ1=DIBZ1+HSBZ1+RLBZ1+RFBZ1$$

$$HSBZ1 = 10 \times BEN \times VOCHS1 \times [(-0.0342 \times MTB) + (-0.080274 \times RVP) + 1.4448]$$

$$DIBZ1 = 10 \times BEN \times VOCD11 \times [(-0.0290 \times MTB) + (-0.080274 \times RVP) + 1.3758]$$

$$RLBZ1 = 10 \times BEN \times VOCRL1 \times [(-0.0342 \times MTB) + (-0.080274 \times RVP) + 1.4448]$$

$$RFBZ1 = 10 \times BEN \times VOCRF1 \times [(-0.0296 \times MTB) + (-0.081507 \times RVP) + 1.3972$$

where

NEBZ1=Nonexhaust emissions of volatile organic compounds in VOC Control Region 1 in milligrams per mile.

DIBZ1=Diurnal emissions of volatile organic compounds in VOC Control Region 1 in milligrams per mile.

HSBZ1=Hot soak emissions of volatile organic compounds in VOC Control Region 1 in milligrams per mile.

RLBZ1=Running loss emissions of volatile organic compounds in VOC Control Region 1 in milligrams per mile.

RFBZ1=Refueling emissions of volatile organic compounds in VOC Control Region 1 in grams per mile.

VOCDI1=Diurnal emissions of volatile organic compounds in VOC Control Region 1 in milligrams per mile, as determined in paragraph (c)(3) of this section.

VOCHS1=Hot soak emissions of volatile organic compounds in VOC Control Region 1 in milligrams per mile, as determined in paragraph (c)(3) of this section.

VOCRL1=Running loss emissions of volatile organic compounds in VOC Control Region 1 in milligrams per mile, as determined in paragraph (c)(3) of this section.

VOCRF1=Refueling emissions of volatile organic compounds in VOC Control Region 1 in milligrams per mile, as determined in paragraph (c)(3) of this section.

(10) Nonexhaust benzene emissions in VOC Control Region 2 shall be given by the following equations for both Phase I and Phase II:

$$NEBZ2=DIBZ2+HSBZ2+RLBZ2+RFBZ2$$

$$HSBZ2 = 10 \times BEN \times VOCHS2 \times [(-0.0342 \times MTB) + (-0.080274 \times RVP) + 1.4448]$$

$$DIBZ2 = 10 \times BEN \times VOCD12 \times [(-0.0290 \times MTB) + (-0.080274 \times RVP) + 1.3758]$$

$$RLBZ2 = 10 \times BEN \times VOCRL2 \times [(-0.0342 \times MTB) + (-0.080274 \times RVP) + 1.4448]$$

$$RFBZ2 = 10 \times BEN \text{ x } VOCRF2 \times [(-0.0296 \times MTB) + (-0.081507 \times RVP) + 1.3972$$

where

NEBZ2=Nonexhaust emissions of volatile organic compounds in VOC Control Region 2 in milligrams per mile.

DIBZ2=Diurnal emissions of volatile organic compounds in VOC Control Region 2 in milligrams per mile.

HSBZ2=Hot soak emissions of volatile organic compounds in VOC Control Region 2 in milligrams per mile.

RLBZ2=Running loss emissions of volatile organic compounds in VOC Control Region 2 in milligrams per mile.

RFBZ2=Refueling emissions of volatile organic compounds in VOC Control Region 2 in grams per mile.

VOCDI2=Diurnal emissions of volatile organic compounds in VOC Control Region 2 in milligrams per mile, as determined in paragraph (c)(4) of this section.

VOCHS2=Hot soak emissions of volatile organic compounds in VOC Control Region 2 in milligrams per mile, as determined in paragraph (c)(4) of this section.

VOCRL2=Running loss emissions of volatile organic compounds in VOC Control Region 2 in milligrams per mile, as determined in paragraph (c)(4) of this section.

VOCRF2=Refueling emissions of volatile organic compounds in VOC Control Region 2 in milligrams per mile, as determined in paragraph (c)(4) of this section.

(f) *Limits of the model.* (1) The equations described in paragraphs (c), (d), and (e) of this section shall be valid

only for fuels with fuel properties that fall in the following ranges for reformulated gasolines and conventional gasolines:

(i) For reformulated gasolines:

Fuel property	Acceptable range
Oxygen	0.0–4.0 weight percent.
Sulfur	0.0–500.0 parts per million by weight.
RVP	6.4–10.0 pounds per square inch.
E200	30.0–70.0 percent evaporated.
E300	70.0–100.0 percent evaporated.
Aromatics	0.0–50.0 volume percent.
Olefins	0.0–25.0 volume percent.
Benzene	0.0–2.0 volume percent.

(ii) For conventional gasoline:

Fuel property	Acceptable range
Oxygen	0.0–4.0 weight percent.
Sulfur	0.0–1000.0 parts per million by weight.
RVP	6.4–11.0 pounds per square inch.
E200	30.0–70.0 percent evaporated.
E300	70.0–100.0 percent evaporated.
Aromatics	0.0–550 volume percent.
Olefins	0.0–30.0 volume percent.
Benzene	0.0–4.9 volume percent.

(2) Fuels with one or more properties that do not fall within the ranges described in above shall not be certified or evaluated for their emissions performance using the complex emissions model described in paragraphs (c), (d), and (e) of this section.

[59 FR 7813, Feb. 16, 1994, as amended at 59 FR 36959, July 20, 1994]

§80.46 Measurement of reformulated gasoline fuel parameters.

(a) *Sulfur.* Sulfur content shall be determined using American Society for Testing and Materials (ASTM) standard method D–2622–92, entitled ''Standard Test Method for Sulfur in Petroleum Products by X-Ray Spectrometry.''

(b) *Olefins.* Olefin content shall be determined using ASTM standard method D–1319–93, entitled ''Standard Test Method for Hydrocarbon Types in Liquid Petroleum Products by Fluorescent Indicator Adsorption.''

(c) *Reid vapor pressure (RVP).* Reid Vapor Pressure (RVP) shall be determined using the procedure described in 40 CFR part 80, appendix E, Method 3.

(d) *Distillation.* (1) Distillation parameters shall be determined using ASTM standard method D–86–90, entitled ''Standard Test Method for Distillation of Petroleum Products''; except that

(2) The figures for repeatability and reproducibility given in degrees Fahrenheit in Table 9 in the ASTM method are incorrect, and shall not be used.

(e) *Benzene.* (1) Benzene content shall be determined using ASTM standard method D–3606–92, entitled ''Standard Test Method for Determination of Benzene and Toluene in Finished Motor and Aviation Gasoline by Gas Chromatography''; except that

(2) Instrument parameters must be adjusted to ensure complete resolution of the benzene, ethanol and methanol peaks because ethanol and methanol may cause interference with ASTM standard method D–3606–92 when present.

(f) *Aromatics.* Aromatics content shall be determined by gas chromatography identifying and quantifying each aromatic compound as set forth in paragraph (f)(1) of this section.

(1)(i) *Detector.* The detector is an atomic mass spectrometer detector (MSD). The detector may be set for either selective ion or scan mode.

(ii) *Method A.* (A) The initial study of this method used a three component internal standard using the following calculations.

(B) The calibration points are constructed by calculating an amount ratio and response ratio for each level of a particular peak in the instrument's calibration table.

(C) The amount ratio is the amount of the compound divided by the amount of the internal standard for a given level.

(D) The response ratio is the response of the compound divided by the response of the internal standard at this level.

(E) The equation for the curve through the calibration points is calculated using the type fit and origin handling specified in the instrument's calibration table. In the initial study the fit was a second degree polynomial including a forced zero for the origin.

(F) The response of the compound in a sample is divided by the response of the internal standard to provide a response ratio for that compound in the sample.

(G) A corrected amount ratio for the unknown is calculated using the curve

fit equation determined in paragragh (f)(1)(ii)(E) of this section.

(H) The amount of the aromatic compound is equal to the corrected amount ratio times the Amount of Internal Standard.

(I) The total aromatics in the sample is the sum of the amounts of the individual aromatic compounds in the sample.

(J) An internal standard solution can be made with the following compounds at the listed concentrations in volume percent. Also listed is the Chemical Abstracts Service Registry Number (CAS), atomic mass unit (amu) on which the detector must be set at the corresponding retention time if used in the selective ion mode, retention times in minutes, and boiling point in °C. (Other, similar, boiling point materials can be used which are not found in gasoline.) Retention times are approximate and apply only to a 60 meter capillary column used in the initial study. Other columns and retention times can be used.

(1) 4-methyl-2-pentanone, 50 vol% [108–10–1], 43.0 amu, 22.8 min., bp 118;

(2) benzyl alcohol, 25 vol%, [100–51–6], 108 amu, 61.7 min., bp 205;

(3) 1-octanol, [111–87–5], 25 vol%, 56.0 amu, 76.6 min., bp 196;

(K) At least two calibration mixtures which bracket the measured total aromatics concentration must be made with a representative mixture of aromatic compounds. The materials and concentrations used in the highest concentration calibration level in the initial study for this method are listed in this paragraph (f)(1)(ii)(K). Also listed is the Chemical Abstracts Service Registry Number (CAS), atomic mass unit (amu) on which the detector must be set for the corresponding retention time if used in the selective ion mode, retention times in minutes, and in some cases boiling point in °C. The standards are made in 2,2,4-trimethylpentane (iso-octane), [540–84–1]. Other aromatic compounds, and retention times may be acceptable as long as the aromatic values produced meet the criteria found in the quality assurance section for the aromatic methods.

Compound	Concentration (percent)	CAS No.	AMU	Retention time	Boiling point, °C
Benzene	2.25 vol	71–43–2	78	18.9 min	80.1
Methylbenzene	10.0 vol	108–88–3	91	25.5 min	111
Ethylbenzene	5.0 vol	100–41–4	91	34.1 min	136.2
1,3-Dimethylbenzene	5 vol	108–38–3	91	35.1 min	136–138
1,4-Dimethylbenzene		106–42–3			
1,2-dimethylbenzene	10 vol	95–47–6	91	38.1 min	144
(1-methylethyl)-benzene	2.25 vol	98–82–8	105	42.8 min	
Propylbenzene	2.25 vol	103–65–1	91	48.0 min	159.2
1-ethyl-2-methylbenzene	2.25 vol	611–14–3	105	49.3 min	165
1,2,4-trimethylbenzene	2.25 vol	95–63–6	105	50.9 min	169
1,2,3-trimethylbenzene	2.25 vol	526–73–8	105	53.3 min	
1,3-diethylbenzene	2.25 vol	141–93–5	119	56.6 min	181
Butylbenzene	2.25 vol	104–51–8	91	60.7 min	183
o-Cymene	2.25 vol	527–84–4	119	63.9 min	
1-ethyl-3-methylbenzene	2.25 vol	620–14–4	105	64.2 min	
m-Cymene	2.25 vol	535–77–3	119	69.0 min	
p-Cymene	2.25 vol	99–87–6	119	73.0 min	
Isobutylbenzene	2.25 vol	538–93–2	91	75.0 min	
Indan	2.25 vol	496–11–7	117	50.0 min	
1-methyl-3-propylbenzene	2.25 vol	1074–43–7	105	78.9 min	
2-ethyl-1,4-dimethylbenzene	2.25 vol	1758–88–9	119	83.2 min	187
1,2,4,5-tetramethylbenzene	2.25 vol	95–93–2	119	83.4 min	
1-ethyl-2,4-dimethylbenzene	2.25 vol	874–41–9	119	85.7 min	
(1,1-dimethylethyl)-3-methylbenzene	2.25 vol	27138–21–2	133	87.3 min	
1-ethyl-2,3-dimethylbenzene	2.25 vol	933–98–2	119	88.7 min	
1-ethyl-1,4-dimethylbenzene	2.25 vol	874–41–9	119	94.9 min	
2-ethyl-1,3-dimethylbenzene	2.25 vol	2870–04–4	119	100.9 min	
1-ethyl-3,5-dimethylbenzene	2.25 vol	934–74–7	119	102.5 min	
1,2,3,5-tetramethylbenzene	2.25 vol	527–53–7	119	115.9 min	
Pentylbenzene	2.25 vol	538–68–1	91	116 min	
Naphthalene	2.25 vol	191–20–3	128	118.4 min	198
3,5-dimethyl-t-butylbenzene	2.25 vol	98–19–1	147	118.5 min	205.3
1-methylnaphthalene	2.25 vol	90–12–0	142	129.0 min	
2-methylnaphthalene	2.25 vol	91–57–6	142	131.0 min	

(iii) *Method B.* (A) Use a percent normalized format to determine the concentration of the individual compounds. No internal standard is used in this method.

(B) The calculation of the aromatic compounds is done by developing calibration curves for each compound using the type fit and origin handling specified in the instrument's calibration table.

(C) The amount of compound in a sample (the corrected amount) is calculated using the equation determined in paragraph (f)(1)(ii) of this section for that compound.

(D) The percent normalized amount of a compound is calculated using the following equation:

$$A_n = 100 \times \left(\frac{A_c}{A_s} \right)$$

where:

A_n= percent normalized amount of a compound

A_c= corrected amount of the compound

A_s= sum of all the corrected amounts for all identified compounds in the sample

(E) The total aromatics is the sum of all the percent normalized aromatic amounts in the sample.

(F) This method allows quantification of non-aromatic compounds in the sample. However, correct quantification can only be achieved if the instrument's calibration table can identify the compounds that are responsible for at least 95 volume percent of the sample and meets the following quality control criteria.

(2) Quality assurance. (i) The performance standards will be from repeated measurement of the calibration mixture, standard reference material, or process control gasoline. The uncertainty in the measured aromatics percentages in the standards must be less than 2.0 volume percent in the fuel at a 95% confidence level.

(ii) If the bias of the standard mean is greater than 2% of the theoretical value, then the standard measurement and measurements of all samples measured subsequent to the previous standard measurement that met the performance criteria must be repeated after re-calibrating the instrument.

(iii) Replicate samples must be within 3.0 volume percent of the previous sample or within 2.0 volume percent of the mean at the 95% confidence level.

(3) *Alternative test method.* (i) Prior to September 1, 1998, any refiner or importer may determine aromatics content using ASTM standard method D–1319–93, entitled ''Standard Test Method for Hydrocarbon Types in Liquid Petroleum Products by Fluorescent Indicator Adsorption,'' for purposes of meeting any testing requirement involving aromatics content; provided that

(ii) The refiner or importer test result is correlated with the method specified in paragraph (f)(1) of this section.

(g) *Oxygen and oxygenate content analysis.* Oxygen and oxygenate content shall be determined by the gas chromatographic procedure using an oxygenate flame ionization detector (GC-OFID) as set out in paragraphs (g)(1) through (8) of this section.

(1) *Introduction; scope of application.* (i) The following single-column, direct-injection gas chromatographic procedure is a technique for quantifying the oxygenate content of gasoline.

(ii) This method covers the quantitative determination of the oxygenate content of gasoline through the use of an oxygenate flame ionization detector (OFID). It is applicable to individual organic oxygenated compounds (up to 20 mass percent each) in gasoline having a final boiling point not greater than 220 °C. Samples above this level should be diluted to fall within the specified range.

(iii) The total concentration of oxygen in the gasoline, due to oxygenated components, may also be determined with this method by summation of all peak areas except for dissolved oxygen, water, and the internal standard. Sensitivities to each component oxygenate must be incorporated in the calculation.

(iv) All oxygenated gasoline components (alcohols, ethers, etc.) may be assessed by this method.

(v) The total mass percent of oxygen in the gasoline due to oxygenated components also may be determined with

this method by summing all peak areas except for dissolved oxygen, water, and the internal standard.

(vi) Where trade names or specific products are noted in the method, equivalent apparatus and chemical reagents may be used. Mention of trade names or specific products is for the assistance of the user and does not constitute endorsement by the U.S. Environmental Protection Agency.

(2) *Summary of method.* A sample of gasoline is spiked to introduce an internal standard, mixed, and injected into a gas chromatograph (GC) equipped with an OFID. After chromatographic resolution the sample components enter a cracker reactor in which they are stoichiometrically converted to carbon monoxide (in the case of oxygenates), elemental carbon, and hydrogen. The carbon monoxide then enters a methanizer reactor for conversion to water and methane. Finally, the methane generated is determined by a flame ionization detector (FID).

(3) *Sample handling and preservation.* (i) Samples shall be collected and stored in containers which will protect them from changes in the oxygenated component contents of the gasoline, such as loss of volatile fractions of the gasoline by evaporation.

(ii) If samples have been refrigerated they shall be brought to room temperature prior to analysis.

(iii) Gasoline is extremely flammable and should be handled cautiously and with adequate ventilation. The vapors are harmful if inhaled and prolonged breathing of vapors should be avoided. Skin contact should be minimized.

(4) *Apparatus.* (i) A GC equipped with an oxygenate flame ionization detector.

(ii) An autosampler for the GC is highly recommended.

(iii) A 60-m length, 0.25-mm ID, 1.0-µm film thickness, nonpolar capillary GC column (J&W DB–1 or equivalent) is recommended.

(iv) An integrator or other acceptable system to collect and process the GC signal.

(v) A positive displacement pipet (200 µL) for adding the internal standard.

(5) *Reagents and materials.* Gasoline and many of the oxygenate additives are extremely flammable and may be toxic over prolonged exposure. Methanol is particularly hazardous. Persons performing this procedure must be familiar with the chemicals involved and all precautions applicable to each.

(i) Reagent grade oxygenates for internal standards and for preparation of standard solutions.

(ii) Supply of oxygenate-free gasoline for blank assessments and for preparation of standard solutions.

(iii) Calibration standard solutions containing known quantities of suspected oxygenates in gasoline.

(iv) Calibration check standard solutions prepared in the same manner as the calibration standards.

(v) Reference standard solutions containing known quantities of suspected oxygenates in gasoline.

(vi) Glass standard and test sample containers (between 5 and 100 Ml capacity) fitted with a self-sealing polytetrafluoroethlene (PTFE) faced rubber septum crimp-on or screw-down sealing cap for preparation of standards and samples.

(6) *Calibration.*—(i)(A) Calibration standards of reagent-grade or better oxygenates (such as methanol, absolute ethanol, methyl t-butyl ether (MTBE), di-i-propyl ether (DIPE), ethyl t-butyl ether (ETBE), and t-amyl methyl ether (TAME)) are to be prepared gravimetrically by blending with gasoline that has been previously determined by GC/OFID to be free of oxygenates. Newly acquired stocks of reagent grade oxygenates shall be analyzed for contamination by GC/FID and GC/OFID before use.

(B) Required calibration standards (percent by volume in gasoline):

Oxygenate	Range (percent)	Number of standards (minimum)
Methanol	0.25–12.00	5
Ethanol	0.25–12.00	5
t-Butanol	0.25–12.00	5
MTBE	0.25–15.00	5

(ii) Take a glass sample container and its PTFE faced rubber septum sealing cap. Transfer a quantity of an oxygenate to the sample container and record the mass of the oxygenate to the nearest 0.1 mg. Repeat this process

for any additional oxygenates of interest except the internal standard. Add oxygenate-free gasoline to dilute the oxygenates to the desired concentration. Record the mass of gasoline added to the nearest 0.1 mg, and determine and label the standard according to the mass percent quantities of each oxygenate added. These standards are not to exceed 20 mass percent for any individual pure component due to potential hydrocarbon breakthrough and/or loss of calibration linearity.

(iii) Inject a quantity of an internal standard (such as 2-butanol) and weigh the contents again. Record the difference in masses as the mass of internal standard to the nearest 0.1 mg. The mass of the internal standard shall amount to between 2 and 6 percent of the mass of the test sample (standard). The addition of an internal standard reduces errors caused by variations in injection volumes.

(iv) Ensure that the prepared standard is thoroughly mixed and transfer approximately 2 Ml of the solution to a vial compatible with the autosampler if such equipment is used.

(v) At least five concentrations of each of the expected oxygenates should be prepared. The standards should be as equally spaced as possible within the range and may contain more than one oxygenate. A blank for zero concentration assessments is also to be included. Additional standards should be prepared for other oxygenates of concern.

(vi) Based on the recommended chromatographic operating conditions specified in paragraph (g)(7)(i) of this section, determine the retention time of each oxygenate component by analyzing dilute aliquots either separately or in known mixtures. Reference should be made to the Chemical Abstracts Service (CAS) registry number of each of the analytes for proper identification. Approximate retention times for selected oxygenates under these conditions are as follows:

Oxygenate	CAS	Retention time (minutes)
Dissolved oxygen	7782–44–7	5.50
Water	7732–18–5	7.20
Methanol	67–56–1	9.10
Ethanol	64–17–5	12.60
Propanone	67–64–1	15.00
2–Propanol	67–63–0	15.70
t-Butanol	75–65–0	18.00
n-Propanol	71–23–8	21.10
MTBE	1634–04–4	23.80
2–Butanol	15892–23–6	26.30
i-Butanol	78–83–1	30.30
ETBE	637–92–3	31.10
n-Butanol	71–36–3	33.50
TAME	994–05–8	35.30
i-Pentanol	137–32–6	38.10

(vii) By GC/OFID analysis, determine the peak area of each oxygenate and of the internal standard.

(viii) Obtain a calibration curve by performing a least-squares fit of the relative area response factors of the oxygenate standards to their relative mass response factors as follows:

$$R_{ao}=b_o\ R_{mo}+b_1(R_{mo})^2$$

where:

R_{ao} = relative area response factor of the oxygenate, A_o/A_i

R_{mo} = relative mass response factor of the oxygenate, Mo/M_i

A_o = area of the oxygenate peak

A_i = area of the internal standard peak

M_o = mass of the oxygenate added to the calibration standard

M_i = mass of internal standard added to the calibration standard

b_0 = linear regression coefficient

b_1 = quadratic regression coefficient

(7) *Procedure.* (i) GC operating conditions:

(A) Oxygenate-free helium carrier gas: 1.1 Ml/min (2 bar), 22.7 cm/sec at 115 °C;

(B) Carrier gas split ratio: 1:100;

(C) Zero air FID fuel: 370 Ml/min (2 bar);

(D) Oxygenate free hydrogen FID fuel: 15 Ml/min (2 bar);

(E) Injector temperature: 250 °C;

(F) Injection volume: 0.5 µL;

(G) Cracker reactor temperature: sufficiently high enough temperature to ensure reduction of all hydrocarbons to the elemental states (i.e., $C_x\ H_{2x} -> C + H_2$, etc.);

(H) FID temperature: 400 °C; and

(I) Oven temperature program: 40 °C for 6 min, followed by a temperature increase of 5 °C/min to 50 °C, hold at 50 °C for 5 min, followed by a temperature

increase of 25 °C/min to 175 °C, and hold at 175 °C for 2 min.

(ii) Prior to analysis of any samples, inject a sample of oxygenate-free gasoline into the GC to test for hydrocarbon breakthrough overloading the cracker reactor. If breakthrough occurs, the OFID is not operating effectively and must be corrected before samples can be analyzed.

(iii) Prepare gasoline test samples for analysis as follows:

(A) Tare a glass sample container and its PTFE faced rubber septum sealing cap. Transfer a quantity of the gasoline sample to the sample container and record the mass of the transferred sample to the nearest 0.1 mg.

(B) Inject a quantity of the same internal standard (such as 2-butanol) used in generating the standards and weigh the contents again. Record the difference in masses as the mass of internal standard to the nearest 0.1 mg. The mass of the internal standard shall amount to between 2 and 6 percent of the mass of the test sample (standard). The addition of an internal standard reduces errors caused by variations in injection volumes.

(C) Ensure that this test sample (gasoline plus internal standard) is thoroughly mixed and transfer approximately 2 mL of the solution to a vial compatible with the autosampler if such equipment is used.

(iv) After GC/OFID analysis, identify the oxygenates in the sample based on retention times, determine the peak area of each oxygenate and of the internal standard, and calculate the relative area response factor for each oxygenate.

(v) Monitor the peak area of the internal standard. A larger than expected peak area for the internal standard when analyzing a test sample may indicate that this oxygenate is present in the original sample. Prepare a new aliquot of the sample without addition of the oxygenate internal standard. If the presence of the oxygenate previously used as the internal standard can be detected, then either:

(A) The concentration of this oxygenate must be assessed by the method of standard additions; or

(B) An alternative internal standard, based on an oxygenate that is not present in the original sample, must be utilized with new calibration curves.

(vi) Calculate the relative mass response factor (R_{mo}) for each oxygenate based on the relative area response factor (R_{ao}) and the calibration equation in paragraph (g)(6)(viii) of this section.

(vii) Calculate the mass percent of the oxygenate in the test sample according to the following equation:

$$M_o\% = \frac{R_{mo} M_i (100\%)}{M_s}$$

where:

$M_o\%$ = mass percent of the oxygenate in the test sample

M_s = mass of sample to which internal standard is added

(viii) If the mass percent exceeds the calibrated range, gravimetrically dilute a portion of the original sample to a concentration within the calibration range and analyze this sample starting with paragraph (g)(7)(iii) of this section.

(ix) Report the total weight percent oxygen as follows:

(A) Subtract the peak areas due to dissolved oxygen, water, and the internal standard from the total summed peak areas of the chromatogram.

(B) Assume the total summed peak area solely due to one of the oxygenates that the instrument is calibrated for and determine the total mass percent as that oxygenate based on paragraph (g)(7)(vii) of this section. For simplicity, chose an oxygenate having one oxygen atom per molecule.

(C) Multiply this concentration by the molar mass of oxygen and divide by the molar mass of the chosen oxygenate to determine the mass percent oxygen in the sample. For example, if the

total peak area is based on MTBE, multiply by 16.00 (the molar mass of atomic oxygen) and divide by 88.15 (the molar mass of MTBE).

(x) Sufficient sample should be retained to permit reanalysis.

(8) *Quality control procedures and accuracy.* (i) The laboratory shall routinely monitor the repeatability (precision) of its analyses. The recommendations are:

(A) The preparation and analysis of laboratory duplicates at a rate of one per analysis batch or at least one per ten samples, whichever is more frequent.

(B) Laboratory duplicates shall be carried through all sample preparation steps independently.

(C) The range (R) for duplicate samples should be less than the following limits:

Oxygenate	Concentration mass percent	Upper limit for range mass percent
Methanol	0.27–1.07	0.010+0.043C
Methanol	1.07–12.73	0.053C
Ethanol	1.01–12.70	0.053C
MTBE	0.25–15.00	0.069+0.029C
DIPE	0.98–17.70	0.048C
ETBE	1.00–18.04	0.074C
TAME	1.04–18.59	0.060C

where:

$C=(C_o+C_d)/2$

C_o=concentration of the original sample

C_d=concentration of the duplicate sample

R=Range, $|C_o-C_d|$

(D) If the limits in paragraph (g)(8)(i)(C) of this section are exceeded, the sources of error in the analysis should be determined, corrected, and all analyses subsequent to and including the last duplicate analysis confirmed to be within the compliance specifications must be repeated. The specification limits for the range and relative range of duplicate analyses are minimum performance requirements. The performance of individual laboratories may indeed be better than these minimum requirements. For this reason it is recommended that control charts be utilized to monitor the variability of measurements in order to optimally detect abnormal situations and ensure a stable measurement process.

(E) *(1)* For reference purposes, a single laboratory study of repeatability was conducted on approximately 27 replicates at each of five concentrations for each oxygenate. The variation of MTBE analyses as measured by standard deviation was very linear with respect to concentration. Where concentration is expressed as mass percent, over the concentration range of 0.25 to 15.0 mass percent this relationship is described by the equation:

standard deviation=0.00784×C+0.0187

(2) The other oxygenates of interest, methanol, ethanol, DIPE, ETBE, and TAME, had consistent coefficients of variation at one mass percent and above:

Oxygenate	Concentration mass percent	Coefficient of variation percent of point
Methanol	1.07–12.73	1.43
Ethanol	1.01–12.70	1.43
DIPE	0.98–17.70	1.29
ETBE	1.00–18.04	2.00
TAME	1.04–18.59	1.62

(3) The relationship of standard deviation and concentration for methanol between 0.27 and 1.07 mass percent was very linear and is described by the equation:

standard deviation=0.0118×C+0.0027

(4) Based on these relationships, repeatability for the selected oxygenates at 2.0 and 2.7 mass percent oxygen were determined to be as follows, where repeatability is defined as the half width of the 95 percent confidence interval (i.e., 1.96 standard deviations) for a single analysis at the stated concentration:

Oxygenate	Concentration			Repeatability mass percent
	Mass percent oxygen	Mass percent oxygenate	Volume percent oxygenate	
Methanol	2.0	4.00	3.75	0.11
Ethanol	2.0	5.75	5.41	0.16
MTBE	2.00	11.00	11.00	0.21
DIPE	2.0	12.77	13.00	0.32
ETBE	2.0	12.77	12.74	0.50
TAME	2.0	12.77	12.33	0.41
Methanol	2.7	5.40	5.07	0.15
Ethanol	2.7	7.76	7.31	0.21
MTBE	2.7	14.88	14.88	0.26
DIPE	2.7	17.24	17.53	0.43
ETBE	2.7	17.24	17.20	0.67

Oxygenate	Concentration			Repeatability mass percent
	Mass percent oxygen	Mass percent oxygenate	Volume percent oxygenate	
TAME	2.7	17.24	16.68	0.55

(ii) The laboratory shall routinely monitor the accuracy of its analyses. The recommendations are:

(A) Calibration check standards and calibration standards may be prepared from the same oxygenate stocks and by the same analyst. However, calibration check standards and calibration standards must be prepared from separate batches of the final diluted standards. For the specification limits listed in paragraph (g)(8)(ii)(C) of this section, the concentration of the check standards should be in the range given in paragraph (g)(8)(i)(C) of this section.

(B) Calibration check standards shall be analyzed at a rate of at least one per analysis batch and at least one per 10 samples, whichever is more frequent.

(C) If the measured concentration of a calibration check standard is outside the range of 100.0% ±6.0% of the theoretical concentration for a selected oxygenate of 1.0 mass percent or above, the sources of error in the analysis should be determined, corrected, and all analyses subsequent to and including the last standard analysis confirmed to be within the compliance specifications must be repeated. The specification limits for the accuracy of calibration check standards analyses are minimum performance requirements. The performance of individual laboratories may indeed be better than these minimum requirements. For this reason it is recommended that control charts be utilized to monitor the variability of measurements in order to optimally detect abnormal situations and ensure a stable measurement process.

(D) Independent reference standards should be purchased or prepared from materials that are independent of the calibration standards and calibration check standards, and must not be prepared by the same analyst. For the specification limits listed in paragraph (g)(8)(ii)(F) of this section, the concentration of the reference standards should be in the range given in paragraph (g)(8)(i)(C) of this section.

(E) Independent reference standards shall be analyzed at a rate of at least one per analysis batch and at least one per 100 samples, whichever is more frequent.

(F) If the measured concentration of an independent reference standard is outside the range of 100.0% ±10.0% of the theoretical concentration for a selected oxygenate of 1.0 mass percent or above, the sources of error in the analysis should be determined, corrected, and all analyses subsequent to and including the last independent reference standard analysis confirmed to be within the compliance specifications in that batch must be repeated. The specification limits for the accuracy of independent reference standards analyses are minimum performance requirements. The performance of individual laboratories may be better than these minimum requirements. For this reason it is recommended that control charts be utilized to monitor the variability of measurements in order to optimally detect abnormal situations and ensure a stable measurement process.

(G) The preparation and analysis of spiked samples at a rate of one per analysis batch and at least one per ten samples.

(H) Spiked samples shall be prepared by adding a volume of a standard to a known volume of sample. To ensure adequate method detection limits, the volume of the standard added to the sample shall be limited to 5% or less than the volume of the sample. The spiked sample shall be carried through the same sample preparation steps as the background sample.

(I) The percent recovery of the spiked sample shall be calculated as follows:

$$\%\,\mathrm{Recovery} = \frac{100\%\ (C_m(V_o + V_1) - C_o V_o)}{C_s\ V_1}$$

where:

V_o=Volume of sample (Ml)

V_l=Volume of spiking standard added (Ml)

C_m=Measured concentration of spiked sample

C_o=Measured background concentration of sample

C_s=Known concentration of spiking standard

(J) If the percent recovery of any individual spiked sample is outside the range 100% ±10% from the theoretical concentration, then the sources of error in the analysis must be determined and corrected, and all analyses subsequent to and including the last analysis confirmed to be within the compliance specifications must be repeated. The maintenance of control charts is one acceptable method or ensuring compliance with this specification.

(K) *(1)* Either the range (absolute difference) or relative range (but not necessarily both) for duplicate samples shall be less than the following limits:

Oxygenate	Concentration (volume percent)	Range	Relative range (volume percent)
Methanol	1.0–12.0	.....	7.2
Ethanol	3.0–12.0	.....	7.1
t-Butanol	3.0–12.0	.....	9.4
MTBE	3.0–15.0	0.55	9.2

(2) Relative range is calculated as follows:

$$R_r = \frac{200(R)}{C_o + C_d}$$

where:

R_r=relative range

R=range

C_o=concentration of the original sample

C_d=concentration of the duplicate sample

(3) If the limits in paragraph (g)(8)(ii)(K)(*1*) of this section are exceeded, the sources of error in the analysis should be determined, corrected, and all analyses subsequent to and including the last duplicate analysis confirmed to be within the compliance specifications must be repeated. The specification limits for the range and relative range of duplicate analyses are minimum performance requirements. The performance of individual laboratories may indeed be better than these minimum requirements. For this reason it is recommended that control charts be utilized to monitor the variability of measurements in order to optimally detect abnormal situations and ensure a stable measurement process. For reference purposes, a single laboratory study of precision (approximately 35 replicates) yielded the following estimates of method precision:

Oxygenate	Concentration (weight percent)	Repeatability (volume percent)	(Percent)
Methanol	2.0	3.7	0.11
Ethanol	2.0	5.4	0.24
t-Butanol	2.0	8.8	0.39
MTBE	2.0	11.0	0.37

(4) Repeatability is defined as the half width of the 95 percent confidence interval for a single analysis at the stated concentration.

(iii) The laboratory shall routinely monitor the accuracy of its analyses. At a minimum this shall include:

(A) Calibration check standards and calibration standards may be prepared from the same oxygenate stocks and by the same analyst. However, calibration check standards and calibration standards must be prepared from separate batches of the final diluted standards. For the specification limits listed in paragraph (g)(8)(iii)(C) of this section, the concentration of the check standards should be in the range given in paragraph (g)(8)(iii)(C) of this section.

(B) Calibration check standards shall be analyzed at a rate of one per analysis batch or at least one per ten samples, whichever is more frequent.

(C) If the measured concentration of a calibration check standard is outside the range of 100%±10% percent of the theoretical concentration for methanol and ethanol, or 100%±13% for t-butanol and MTBE, the sources of error in the analysis should be determined, corrected, and all analyses subsequent to and including the last standard analysis confirmed to be within the compliance specifications must be repeated.

The specification limits for the accuracy of calibration check standards analyses are minimum performance requirements. The performance of individual laboratories may indeed be better than these minimum requirements. For this reason it is recommended that control charts be utilized to monitor the variability of measurements in order to optimally detect abnormal situations and ensure a stable measurement process.

(D) Independent reference standards shall be purchased or prepared from materials that are independent of the calibration standards and calibration check standards, and must not be prepared by the same analyst. For the specification limits listed in paragraph (g)(8)(iii)(F) of this section, the concentration of the reference standards should be in the range given in paragraph (g)(8)(iii)(C) of this section.

(E) Independent reference standards shall be analyzed at a rate of one per analysis batch or at least one per 100 samples, whichever is more frequent.

(F) If the measured concentration of an independent reference standard is outside the range of 100%±10% of the theoretical concentration for methanol and ethanol, or 100%±13% for t-butanol and MTBE, the sources of error in the analysis should be determined, corrected, and all analyses subsequent to and including the last independent reference standard analysis confirmed to be within the compliance specifications in that batch must be repeated. The specification limits for the accuracy of independent reference standards analyses are minimum performance requirements. The performance of individual laboratories may indeed be better than these minimum requirements. For this reason it is recommended that control charts be utilized to monitor the variability of measurements in order to optimally detect abnormal situations and ensure a stable measurement process.

(G) If matrix effects are suspected, then spiked samples shall be prepared and analyzed as follows:

(1) Spiked samples shall be prepared by adding a volume of a standard to a known volume of sample. To ensure adequate method detection limits, the volume of the standard added to the sample should be minimized to 5% or less of the volume of the sample. The spiked sample should be carried through the same sample preparation steps as the background sample.

(2) The percent recovery of spiked samples should be calculated as follows:

$$\%\text{Recovery} = \frac{100\ (C_c(V_o + V_s) - C_o V_o)}{C_s\ V_s}$$

where:

C_c=concentration of spiked sample

C_o=concentration of sample without spiking

C_s=known concentration of spiking standard

V_o=volume of sample

V_s=volume of spiking standard added to the sample

(3) If the percent recovery of a spiked sample is outside the range of 100% ±13% of the theoretical concentration for methanol and ethanol, or 100% ±16% for t-butanol and MTBE, the sources of error in the analysis should be determined, corrected, and all analyses subsequent to and including the last analysis confirmed to be within the compliance specifications must be repeated. The specification limits for the accuracy of the percent recovery of spiked sample analyses are minimum performance requirements. The performance of individual laboratories may indeed be better than these minimum requirements. For this reason it is recommended that control charts be utilized to monitor the variability of measurements in order to optimally detect abnormal situations and ensure a stable measurement process.

(9)(i) Prior to September 1, 1998, and when the oxygenates present are limited to MTBE, ETBE, TAME, DIPE,

tertiary-amyl alcohol, and C_1 to C_4 alcohols, any refiner, importer, or oxygenate blender may determine oxygen and oxygenate content using ASTM standard method D–4815–93, entitled ''Standard Test Method for Determination of MTBE, ETBE, TAME, DIPE, tertiary-Amyl Alcohol and C_1 to C_4 Alcohols in Gasoline by Gas Chromatography,'' for purposes of meeting any testing requirement; provided that

(ii) The refiner or importer test result is correlated with the method set forth in paragraphs (g)(1) through (g)(8) of this section.

(h) *Incorporations by reference.* ASTM standard methods D–3606–92, D–1319–93, D–4815–93, D–2622–92, and D–86–90 with the exception of the degrees Fahrenheit figures in Table 9 of D–86–90, are incorporated by reference. These incorporations by reference were approved by the Director of the Federal Register in accordance with 5 U.S.C. 552(A) and 1 CFR part 51. Copies may be obtained from the American Society of Testing Materials, 1916 Race Street, Philadelphia, PA 19103. Copies may be inspected at the Air Docket Section (LE–131), room M–1500, U.S. Environmental Protection Agency, Docket No. A–92–12, 401 M Street SW., Washington, DC 20460 or at the Office of the Federal Register, 800 North Capitol Street, NW., suite 700, Washington, DC.

[59 FR 7813, Feb. 16, 1994, as amended at 59 FR 36961, July 20, 1994; 61 FR 58306, Nov. 13, 1996]

§80.47 [Reserved]

§80.48 Augmentation of the complex emission model by vehicle testing.

(a) The provisions of this section apply only if a fuel claims emission reduction benefits from fuel parameters that are not included in the complex emission model or complex emission model database, or if the values of fuel parameters included in the complex emission model set forth in §80.45 fall outside the range of values for which the complex emission model is deemed valid.

(b) To augment the complex emission model described at §80.45, the following requirements apply:

(1) The petitioner must obtain prior approval from the Administrator for the design of the test program before beginning the vehicle testing process. To obtain approval, the petitioner must at minimum provide the following information: the fuel parameter to be evaluated for emission effects; the number and description of vehicles to be used in the test fleet, including model year, model name, vehicle identification number (VIN), mileage, emission performance (exhaust THC emission level), technology type, and manufacturer; a description of the methods used to procure and prepare the vehicles; the properties of the fuels to be used in the testing program (as specified at §80.49); the pollutants and emission categories intended to be evaluated; the precautions used to ensure that the effects of the parameter in question are independent of the effects of other parameters already included in the model; a description of the quality assurance procedures to be used during the test program; the statistical analysis techniques to be used in analyzing the test data, and the identity and location of the organization performing the testing.

(2) Exhaust emissions shall be measured per the requirements of this section and §80.49 through §80.62.

(3) The nonexhaust emission model (including evaporative, running loss, and refueling VOC and toxics emissions) shall not be augmented by vehicle testing.

(4) The Agency reserves the right to observe and monitor any testing that is performed pursuant to the requirements of this section.

(5) The Agency reserves the right to evaluate the quality and suitability of data submitted pursuant to the requirements of this section and to reject, re-analyze, or otherwise evaluate such data as is technically warranted.

(6) Upon a showing satisfactory to the Administrator, the Administrator may approve a petition to waive the requirements of this section and §80.49, §80.50(a), §80.60(d)(3), and §80.60(d)(4) in order to better optimize the test program to the needs of the particular fuel parameter. Any such waiver petition should provide information justifying the requested waiver, including an acceptable rationale and supporting data. Petitioners must obtain approval from

the Administrator prior to conducting testing for which the requirements in question are waived. The Administrator may waive the noted requirements in whole or in part, and may impose appropriate conditions on any such waiver.

(c) In the case of petitions to augment the complex model defined at § 80.45 with a new parameter, the effect of the parameter being tested shall be determined separately, for each pollutant and for each emitter class category. If the parameter is not included in the complex model but is represented in whole or in part by one or more parameters included in the model, the petitioner shall be required to demonstrate the emission effects of the parameter in question independent of the effects of the already-included parameters. The petitioner shall also have to demonstrate the effects of the already-included parameters independent of the effects of the parameter in question. The emission performance of each vehicle on the fuels specified at § 80.49, as measured through vehicle testing in accordance with § 80.50 through § 80.62, shall be analyzed to determine the effects of the fuel parameter being tested on emissions according to the following procedure:

(1) The analysis shall fit a regression model to the natural logarithm of emissions measured from addition fuels 1, 2, and 3 only (as specified at § 80.49(a) and adjusted as per paragraph (c)(1)(iv) of this section and § 80.49(d)) that includes the following terms:

(i) A term for each vehicle that shall reflect the effect of the vehicle on emissions independent of fuel compositions. These terms shall be of the form $D_i \times V_i$, where D_i is the coefficient for the term and V_i is a dummy variable which shall have the value 1.0 for the ith vehicle and the value 0 for all other vehicles.

(ii) A linear term in the parameter being tested for each emitter class, of the form $A_i \times (P_1 - P_1\ (avg)) \times E_i$, where A_i is the coefficient for the term, P_1 is the level of the parameter in question, P_1 (avg) is the average level of the parameter in question for all seven test fuels specified at § 80.49(a)(1), and E_i is a dummy variable representing emitter class, as defined at § 80.62. For normal emitters, E_1=1 and E_2=0. For higher emitters, E_1=0 and E_2=1.

(iii) For the VOC and NO_x models, a squared term in the parameter being tested for each emitter class, of the form $B_i \times (P_1 - P_1\ (avg))^2 \times E_i$, where B_i is the coefficient for the term and where P_1 , P_1 (avg), and E_i are as defined in paragraph (c)(1)(ii) of this section.

(iv) To the extent that the properties of fuels 1, 2, and 3 which are incorporated in the complex model differ in value among the three fuels, the complex model shall be used to adjust the observed emissions from test vehicles on those fuels to compensate for those differences prior to fitting the regression model.

(v) The A_i and B_i terms and coefficients developed by the regression described in this paragraph (c) shall be evaluated against the statistical criteria defined in paragraph (e) of this section. If both terms satisfy these criteria, then both terms shall be retained. If the B_i term satisfies these criteria and the A_i term does not, then both terms shall be retained. If the B_i term does not satisfy these criteria, then the B_i term shall be dropped from the regression model and the model shall be re-estimated. If, after dropping the B_i term and re-estimating the model, the A_i term does not satisfy these criteria, then both terms shall be dropped, all test data shall be reported to EPA, and the augmentation request shall be denied.

(2) After completing the steps outlined in paragraph (c)(1) of this section, the analysis shall fit a regression model to a combined data set that includes vehicle testing results from all seven addition fuels specified at § 80.49(a), the vehicle testing results used to develop the model specified at § 80.45, and vehicle testing results used to support any prior augmentation requests which the Administrator deems necessary.

(i) The analysis shall fit the regression models described in paragraphs (c)(2) (ii) through (v) of this section to the natural logarithm of measured emissions.

(ii) All regressions shall include a term for each vehicle that shall reflect the effect of the vehicle on emissions independent of fuel compositions.

These terms shall be of the form $D_i \times V_i$, where D_i is the coefficient for the term and V_i is a dummy variable which shall have the value 1.0 for the ith vehicle and the value 0 for all other vehicles. Vehicles shall be represented by separate terms for each test program in which they were tested. The vehicle terms for the vehicles included in the test program undertaken by the petitioner shall be calculated based on the results from all seven fuels specified at § 80.49(a). Note that the D_i estimates for the petitioner's test vehicles in this regression are likely to differ from the D_i estimates discussed in paragraph (c)(1)(i) of this section since they will be based on a different set of fuels.

(iii) All regressions shall include existing complex model terms and their coefficients, including those augmentations that the Administrator deems necessary. All terms and coefficients shall be expressed in centered form. The Administrator shall make available upon request existing complex model terms and coefficients in centered form.

(iv) All regressions shall include the linear and squared terms, and their coefficients, estimated in the final regression model described in paragraph (c)(1) of this section.

(v) The VOC and NO_x regressions shall include those interactive terms with other fuel parameters, of the form $C_{i(1,j)} \times (P_1 - P_1\ (avg)) \times (P_j - P_j\ (avg)) \times E_i$, where $C_{i(1,j)}$ is the coefficient for the term, P_1 is the level of the parameter being added to the model, P_1 (avg) is the average level of the parameter being added for all seven addition fuels specified at § 80.49(a), P_j is the level of the other fuel parameter, P_j (avg) is the centering value for the other fuel parameter used to develop the complex model or used in the other parameter's augmentation study, and E_i is as defined in paragraph (c)(1) of this section, which are found to satisfy the statistical criteria defined in paragraph (e) of this section. Such terms shall be added to the regression model in a stepwise manner.

(3) The model described in paragraphs (c) (1) and (2) of this section shall be developed separately for normal-emitting and higher-emitting vehicles. Each emitter class shall be treated as a distinct population for the purposes of determining regression coefficients.

(4) Once the augmented models described in paragraphs (c) (1) through (3) of this section have been developed, they shall be converted to an uncentered form through appropriate algebraic manipulation.

(5) The augmented model described in paragraph (c)(4) of this section shall be used to determine the effects of the parameter in question at levels between the levels in Fuels 1 and 3, as defined at § 80.49(a)(1), for all fuels which claim emission benefits from the parameter in question.

(d)(1) In the case of petitions to augment the complex model defined at § 80.45 by extending the range of an existing complex model parameter, the effect of the parameter being tested shall be determined separately, for each pollutant and for each technology group and emitter class category, at levels between the extension level and the nearest limit of the core of the data used to develop the unaugmented complex model as follows:

Fuel parameter	Data core limits	
	Lower	Upper
Sulfur, ppm	10	450
RVP, psi	7	10
E200, vol %	33	66
E300, vol %	72	94
Aromatics, vol %	18	46
Benzene, vol %	0.4	1.8
Olefins, vol %	1	19
Oxygen, wt %.		
As ethanol	0	3.4
All others:	0	2.7

(2) The emission performance of each vehicle on the fuels specified at § 80.49(b)(2), as measured through vehicle testing in accordance with §§ 80.50 through 80.62, shall be analyzed to determine the effects of the fuel parameter being tested on emissions according to the following procedure:

(i) The analysis shall incorporate the vehicle testing data from the extension fuels specified at § 80.49(b), the vehicle testing results used to develop the model specified at § 80.45, and vehicle testing results used to support any prior augmentation requests which the Administrator deems necessary. A regression incorporating the following terms shall be fitted to the natural

logarithm of emissions contained in this combined data set:

(A) A term for each vehicle that shall reflect the effect of the vehicle on emissions independent of fuel compositions. These terms shall be of the form D_i x V_i, where D_i is the coefficient for the term and V_i is a dummy variable which shall have the value 1.0 for the ith vehicle and the value 0 for all other vehicles. Vehicles shall be represented by separate terms for each test program in which they were tested. The vehicle terms for the vehicles included in the test program undertaken by the petitioner shall be calculated based on the results from all three fuels specified at § 80.49(b)(2).

(B) Existing complex model terms that do not include the parameter being extended and their coefficients, including those augmentations that the Administrator deems necessary. The centering values for these terms shall be identical to the centering values used to develop the complex model described at § 80.45.

(C) Existing complex model terms that include the parameter being extended. The coefficients for these terms shall be estimated by the regression. The centering values for these terms shall be identical to the centering values used to develop the complex model described at § 80.45.

(D) If the unaugmented VOC or NO_x complex models do not contain a squared term for the parameter being extended, such a term should be added in a stepwise fashion after completing the model described in paragraphs (d)(2)(i)(A) through (C) of this section. The coefficient for this term shall be estimated by the regression. The centering value for this term shall be identical to the centering value used to develop the complex model described at § 80.45.

(E) The terms defined in paragraphs (d)(2)(i)(C) and (D) of this section shall be evaluated against the statistical criteria defined in paragraph (e) of this section.

(ii) The model described in paragraph (d)(2)(i) of this section shall be developed separately for normal-emitting and higher-emitting vehicles, as defined at § 80.62. Each emitter class shall be treated as a distinct population for the purposes of determining regression coefficients.

(e) *Statistical criteria.* (1) The petitioner shall be required to submit evidence with the petition which demonstrates the statistical validity of the regression described in paragraph (c) or (d) of this section, including at minimum:

(i) Evidence demonstrating that colinearity problems are not severe, including but not limited to variance inflation statistics of less than 10 for the second-order and interactive terms included in the regression model.

(ii) Evidence demonstrating that the regression residuals are normally distributed, including but not limited to the skewness and Kurtosis statistics for the residuals.

(iii) Evidence demonstrating that overfitting and underfitting risks have been balanced, including but not limited to the use of Mallow's C_p criterion.

(2) The petitioner shall be required to submit evidence with the petition which demonstrates that the appropriate terms have been included in the regression, including at minimum:

(i) Descriptions of the analysis methods used to develop the regressions, including any computer code used to analyze emissions data and the results of regression runs used to develop the proposed augmentation, including intermediate regressions produced during the stepwise regression process.

(ii) Evidence demonstrating that the significance level used to include terms in the model was equal to 0.90.

(f) The complex emission model shall be augmented with the results of vehicle testing as follows:

(1) The terms and coefficients determined in paragraph (c) or (d) of this section shall be used to supplement the complex emission model equation for the corresponding pollutant and emitter category. These terms and coefficients shall be weighted to reflect the contribution of the emitter category to in-use emissions as shown at § 80.45.

(2) If the candidate parameter is not included in the unaugmented complex model and is not represented in whole or in part by one or more parameters included in the model, the modification shall be accomplished by adding the terms and coefficients to the complex

model equation for that pollutant, technology group, and emitter category.

(3) If the parameter is included in the complex model but is being tested at levels beyond the current range of the model, the terms and coefficients determined in paragraph (d) of this section shall be used to supplement the complex emission model equation for the corresponding pollutant.

(i) The terms and coefficients of the complex model described at §80.45 shall be used to evaluate the emissions performance of fuels with levels of the parameter being tested that are within the valid range of the model, as defined at §80.45.

(ii) The emissions performance of fuels with levels of the parameter that are beyond the valid range of the unaugmented model shall be given in percentage change terms by 100-[(100+A)×(100+C)/(100+B)], where:

(A) ''A'' shall be set equal to the percentage change in emissions for a fuel with identical fuel property values to the fuel being evaluated except for the parameter being extended, which shall be set equal to the nearest limit of the data core, using the unaugmented complex model.

(B) ''B'' shall be set equal to the percentage change in emissions for the fuel described in paragraph (f)(3)(i) of this section according to the augmented complex model.

(C) ''C'' shall be set equal to the percentage change in emissions of the actual fuel being evaluated using the augmented complex model.

(g) EPA reserves the right to analyze the data generated during vehicle testing, to use such analyses to determine the validity of other augmentation petitions, and to use such data to update the complex model for use in certifying all reformulated gasolines.

(h) Duration of acceptance of emission effects determined through vehicle testing:

(1) If the Agency does not accept, modify, or reject a particular augmentation for inclusion in an updated complex model (performed through rulemaking), then the augmentation shall remain in effect until the next update to the complex model takes effect.

(2) If the Agency does reject or modify a particular augmentation for inclusion in an updated complex model, then the augmentation shall no longer be able to be used as of the date the updated complex model is deemed to take effect, unless the following conditions and limitations apply:

(i) The augmentation in question may continue to be used by those fuel suppliers which can prove, to the Administrator's satisfaction, that the fuel supplier had already begun producing a fuel utilizing the augmentation at the time the revised model is promulgated.

(ii) The augmentation in question may only be used to evaluate the emissions performance of fuels in conjunction with the complex emission model in effect as of the date of production of the fuels.

(iii) The augmentation may only be used for three years of fuel production, or a total of five years from the date the augmentation first took effect, whichever is shorter.

(3) The Administrator shall determine when sufficient new information on the effects of fuel properties on vehicle emissions has been obtained to warrant development of an updated complex model.

[59 FR 7813, Feb. 16, 1994, as amended at 59 FR 36962, July 20, 1994]

§80.49 Fuels to be used in augmenting the complex emission model through vehicle testing.

(a) Seven fuels (hereinafter called the ''addition fuels'') shall be tested for the purpose of augmenting the complex emission model with a parameter not currently included in the complex emission model. The properties of the addition fuels are specified in paragraphs (a) (1) and (2) of this section. The addition fuels shall be specified with at least the same level of detail and precision as in §80.43(c), and this information must be included in the petition submitted to the Administrator requesting augmentation of the complex emission model.

(1) The seven addition fuels to be tested when augmenting the complex model specified at §80.45 with a new fuel parameter shall have the properties specified as follows:

PROPERTIES OF FUELS TO BE TESTED WHEN AUGMENTING THE MODEL WITH A NEW FUEL PARAMETER

Fuel property	Fuels						
	1	2	3	4	5	6	7
Sulfur, ppm	150	150	150	35	35	500	500
Benzene, vol %	1.0	1.0	1.0	0.5	0.5	1.3	1.3
RVP, psi	7.5	7.5	7.5	6.5	6.5	8.1	8.1
E200, %	50	50	50	62	62	37	37
E300, %	85	85	85	92	92	79	79
Aromatics, vol %	27	27	27	20	20	45	45
Olefins, vol %	9.0	9.0	9.0	2.0	2.0	18	18
Oxygen, wt %	2.1	2.1	2.1	2.7	2.7	1.5	1.5
Octane, (R+M)/2	87	87	87	87	87	87	87
New Parameter[1]	C	C+B/2	B	C	B	C	B

[1] C=Candidate level, B=Baseline level.

(i) For the purposes of vehicle testing, the ''baseline'' level of the parameter shall refer to the level of the parameter in Clean Air Act baseline gasoline. The ''candidate'' level of the parameter shall refer to the most extreme value of the parameter, relative to baseline levels, for which the augmentation shall be valid.

(ii) If the fuel parameter for which the fuel supplier is petitioning EPA to augment the complex emission model (hereinafter defined as the ''candidate parameter'') is not specified for Clean Air Act summer baseline fuel, then the baseline level for the candidate parameter shall be set at the levels found in typical gasoline. This level and the justification for this level shall be included in the petitioner's submittal to EPA prior to initiating the test program, and EPA must approve this level prior to the start of the program.

(iii) If the candidate parameter is not specified for Clean Air Act summer baseline fuel, and is not present in typical gasoline, its baseline level shall be zero.

(2) The addition fuels shall contain detergent control additives in accordance with section 211(l) of the Clean Air Act Amendments of 1990 and the associated EPA requirements for such additives.

(3) The addition fuels shall be specified with at least the same level of detail and precision as in § 80.43(c), and this information shall be included in the petition submitted to the Administrator requesting augmentation of the complex emission model.

(i) Paraffin levels in Fuels 1 and 2 shall be altered from the paraffin level in Fuel 3 to compensate for the addition or removal of the candidate parameter, if necessary. Paraffin levels in Fuel 4 shall be altered from the paraffin level in Fuel 5 to compensate for the addition or removal of the candidate parameter, if necessary. Paraffin levels in Fuel 6 shall be altered from the paraffin level in Fuel 7 to compensate for the addition or removal of the candidate parameter, if necessary.

(ii) Other properties of Fuels 4 and 6 shall not vary from the levels for Fuels 5 and 7, respectively, unless such variations are the naturally-occurring result of the changes described in paragraphs (a)(1) and (2) of this section. Other properties of Fuels 1 and 2 shall not vary from the levels for Fuel 3, unless such variations are the naturally-occurring result of the changes described in paragraphs (a)(1) and (2) of this section.

(iii) The addition fuels shall be specified with at least the same level of detail and precision as defined in paragraph (a)(5)(i) of this section, and this information must be included in the petition submitted to the Administrator requesting augmentation of the complex emission model.

(4) The properties of the addition fuels shall be within the blending tolerances defined in this paragraph (a)(4) relative to the values specified in paragraphs (a)(1) and (2) of this section. Fuels that do not meet these tolerances shall require the approval of the Administrator to be used in vehicle

testing to augment the complex emission model:

Fuel parameter	Blending tolerance
Sulfur content	±25 ppm.
Benzene content	±0.2 vol %.
RVP	±0.2 psi.
E200 level	±2 %.
E300 level	±4 %.
Oxygenate content	±1.0 vol %.
Aromatics content	±2.7 vol %.
Olefins content	±2.5 vol %.
Saturates content	±2.0 vol %.
Octane	±0.5.
Detergent control additives	±10% of the level required by EPA's detergents rule.
Candidate parameter	To be determined as part of the augmentation process.

(5) The composition and properties of the addition fuels shall be determined by averaging a series of independent tests of the properties and compositional factors defined in paragraph (a)(5)(i) of this section as well as any additional properties or compositional factors for which emission benefits are claimed.

(i) The number of independent tests to be conducted shall be sufficiently large to reduce the measurement uncertainty for each parameter to a sufficiently small value. At a minimum the 95% confidence limits (as calculated using a standard t-test) for each parameter must be within the following range of the mean measured value of each parameter:

Fuel parameter	Measurement uncertainty
API gravity	±0.2°API
Sulfur content	±10 ppm
Benzene content	±0.02 vol %
RVP	±0.05 psi
Octane	±0.2(R+M/2)
E200 level	±2%
E300 level	±2%
Oxygenate content	±0.2 vol %
Aromatics content	±0.5 vol %
Olefins content	±0.3 vol %
Saturates content	±1.0 vol %
Detergent control Additives.	±2% of the level required by EPA's detergents rule.

(ii) The 95% confidence limits for measurements of fuel parameters for which emission reduction benefits are claimed and for which tolerances are not defined in paragraph (a)(5)(i) of this section must be within ±5% of the mean measured value.

(iii) Each test must be conducted in the same laboratory in accordance with the procedures outlined at § 80.46.

(b) Three fuels (hereinafter called the ''extension fuels'') shall be tested for the purpose of extending the valid range of the complex emission model for a parameter currently included in the complex emission model. The properties of the extension fuels are specified in paragraphs (b)(2) through (4) of this section. The extension fuels shall be specified with at least the same level of detail and precision as in § 80.43(c), and this information must be included in the petition submitted to the Administrator requesting augmentation of the complex emission model. Each set of three extension fuels shall be used only to extend the range of a single complex model parameter.

(1) The ''extension level'' shall refer to the level to which the parameter being tested is to be extended. The three fuels to be tested when extending the range of fuel parameters already included in the complex model or a prior augmentation to the complex model shall be referred to as ''extension fuels.''

(2) The composition and properties of the extension fuels shall be as described in paragraphs (b)(2) (i) and (ii) of this section.

(i) The extension fuels shall have the following levels of the parameter being extended:

LEVEL OF EXISTING COMPLEX MODEL PARAMETERS BEING EXTENDED

Fuel property being extended	Extension fuel No. 1	Extension fuel No. 2	Extension fuel No. 3
Sulfur, ppm	Extension level	80	450
Benzene, vol %	Extension level	0.5	1.5
RVP, psi	Extension level	6.7	8.0
E200, %	Extension level	38	61
E300, %	Extension level	78	92
Aromatics, vol %	Extension level	20	45
Olefins, vol %	Extension level	3.0	18
Oxygen, wt %	Extension level	1.7	2.7

LEVEL OF EXISTING COMPLEX MODEL PARAMETERS BEING EXTENDED—Continued

Fuel property being extended	Extension fuel No. 1	Extension fuel No. 2	Extension fuel No. 3
Octane, R+M/2	87	87	87

(ii) The levels of parameters other than the one being extended shall be given by the following table for all three extension fuels:

LEVELS FOR FUEL PARAMETERS OTHER THAN THOSE BEING EXTENDED

Fuel property	Extension fuel No. 1	Extension fuel No. 2	Extension fuel No. 3
Sulfur, ppm	150	150	150
Benzene, vol %	1.0	1.0	1.0
RVP, psi	7.5	7.5	7.5
E200, %	50	50	50
E300, %	85	85	85
Aromatics, vol %	25	25	25
Olefins, vol %	9.0	9.0	9.0
Oxygen, wt %	2.0	2.0	2.0
Octane, R+M/2	87	87	87

(3) If the Complex Model for any pollutant includes one or more interactive terms involving the parameter being extended, then two additional extension fuels shall be required to be tested for each such interactive term. These additional extension fuels shall have the following properties:

(i) The parameter being tested shall be present at its extension level.

(ii) The interacting parameter shall be present at the levels specified in paragraph (b)(2)(i) of this section for extension Fuels 2 and 3.

(iii) All other parameters shall be present at the levels specified in paragraph (b)(2)(ii) of this section.

(4) All extension fuels shall contain detergent control additives in accordance with Section 211(l) of the Clean Air Act Amendments of 1990 and the associated EPA requirements for such additives.

(c) The addition fuels defined in paragraph (a) of this section and the extension fuels defined in paragraph (b) of this section shall meet the following requirements for blending and measurement precision:

(1) The properties of the test and extension fuels shall be within the blending tolerances defined in this paragraph (c) relative to the values specified in paragraphs (a) and (b) of this section. Fuels that do not meet the following tolerances shall require the approval of the Administrator to be used in vehicle testing to augment the complex emission model:

Fuel parameter	Blending tolerance
Sulfur content	±25 ppm.
Benzene content	±0.2 vol %.
RVP	±0.2 psi.
E200 level	±2 %.
E300 level	±4 %.
Oxygenate content	±1.5 vol %.
Aromatics content	±2.7 vol %.
Olefins content	±2.5 vol %.
Saturates content	±2.0 vol %.
Octane	±0.5.
Candidate parameter	To be determined as part of the augmentation process.

(2) The extension and addition fuels shall be specified with at least the same level of detail and precision as defined in paragraph (c)(2)(ii) of this section, and this information must be included in the petition submitted to the Administrator requesting augmentation of the complex emission model.

(i) The composition and properties of the addition and extension fuels shall be determined by averaging a series of independent tests of the properties and compositional factors defined in paragraph (c)(2)(ii) of this section as well as any additional properties or compositional factors for which emission benefits are claimed.

(ii) The number of independent tests to be conducted shall be sufficiently large to reduce the measurement uncertainty for each parameter to a sufficiently small value. At a minimum the 95% confidence limits (as calculated using a standard t-test) for each parameter must be within the following range of the mean measured value of each parameter:

Fuel parameter	Measurement uncertainty
API gravity	±0.2 °API.
Sulfur content	±5 ppm.
Benzene content	±0.05 vol %.
RVP	±0.08 psi.
Octane	±0.1 (R+M/2).
E200 level	±2 %.

Fuel parameter	Measurement uncertainty
E300 level	±2 %.
Oxygenate content	±0.2 vol %.
Aromatics content	±0.5 vol %.
Olefins content	±0.3 vol %.
Saturates content	±1.0 vol.%
Octane	±0.2.
Candidate parameter	To be determined as part of the augmentation process.

(iii) Petitioners shall obtain approval from EPA for the 95% confidence limits for measurements of fuel parameters for which emission reduction benefits are claimed and for which tolerances are not defined in paragraph (c)(2)(i) of this section.

(iv) Each test must be conducted in the same laboratory in accordance with the procedures outlined at §80.46.

(v) The complex emission model described at §80.45 shall be used to adjust the emission performance of the addition and extension fuels to compensate for differences in fuel compositions that are incorporated in the complex model, as described at §80.48. Compensating adjustments for naturally-resulting variations in fuel parameters shall also be made using the complex model. The adjustment process is described in paragraph (d) of this section.

(d) The complex emission model described at §80.45 shall be used to adjust the emission performance of addition and extension fuels to compensate for differences in fuel parameters other than the parameter being tested. Compensating adjustments for naturally-resulting variations in fuel parameters shall also be made using the complex model. These adjustments shall be calculated as follows:

(1) Determine the exhaust emissions performance of the actual addition or extension fuels relative to the exhaust emissions performance of Clean Air Act baseline fuel using the complex model. For addition fuels, set the level of the parameter being tested at baseline levels for purposes of emissions performance evaluation using the complex model. For extension fuel #1, set the level of the parameter being extended at the level specified in extension fuel #2. Also determine the exhaust emissions performance of the addition fuels specified in paragraph (a)(1) of this section with the level of the parameter being tested set at baseline levels.

(2) Calculate adjustment factors for each addition fuel as follows:

(i) Adjustment factors shall be calculated using the formula:

$$A = \frac{[1+(P(\text{actual})\ 100)]}{[1+(P(\textit{nominal})\ 100)]}$$

where

A=the adjustment factor

P(actual)=the performance of the actual fuel used in testing according to the complex model

P(nominal)=the performance that would have been achieved by the test fuel defined in paragraph (a)(1) of this section according to the complex model (as described in paragraph (d)(1) of this section).

(ii) Adjustment factors shall be calculated for each pollutant and for each emitter class.

(3) Multiply the measured emissions from each vehicle by the corresponding adjustment factor for the appropriate addition or extension fuel, pollutant, and emitter class. Use the resulting adjusted emissions to conduct all modeling and emission effect estimation activities described in §80.48.

(e) All fuels included in vehicle testing programs shall have an octane number of 87.5, as measured by the (R+M)/2 method following the ASTM D4814 procedures, to within the measurement and blending tolerances specified in paragraph (c) of this section.

(f) A single batch of each addition or extension fuel shall be used throughout the duration of the testing program.

[59 FR 7813, Feb. 16, 1994, as amended at 59 FR 36962, July 20, 1994]

§ 80.50 General test procedure requirements for augmentation of the emission models.

(a) The following test procedure must be followed when testing to augment the complex emission model described at § 80.45.

(1) VOC, NO_X, CO, and CO_2 emissions must be measured for all fuel-vehicle combinations tested.

(2) Toxics emissions must be measured when testing the extension fuels per the requirements of § 80.49(a) or when testing addition fuels 1, 2, and 3 per the requirements of § 80.49(a).

(3) When testing addition fuels 4, 5, 6, and 7 per the requirements of § 80.49(a), toxics emissions need not be measured. However, EPA reserves the right to require the inclusion of such measurements in the test program prior to approval of the test program if evidence exists which suggests that adverse interactive effects of the parameter in question may exist for toxics emissions.

(b) The general requirements per 40 CFR 86.130–96 shall be met.

(c) The engine starting and restarting procedures per 40 CFR 86.136–90 shall be followed.

(d) Except as provided for at § 80.59, general preparation of vehicles being tested shall follow procedures detailed in 40 CFR 86.130–96 and 86.131–96.

§ 80.51 Vehicle test procedures.

The test sequence applicable when augmenting the emission models through vehicle testing is as follows:

(a) Prepare vehicles per § 80.50.

(b) Initial preconditioning per § 80.52(a)(1). Vehicles shall be refueled randomly with the fuels required in § 80.49 when testing to augment the complex emission model.

(c) Exhaust emissions tests, dynamometer procedure per 40 CFR 86.137–90 with:

(1) Exhaust Benzene and 1,3–Butadiene emissions measured per § 80.55; and

(2) Formaldehyde and Acetelaldehyde emissions measured per § 80.56.

§ 80.52 Vehicle preconditioning.

(a) Initial vehicle preconditioning and preconditioning between tests with different fuels shall be performed in accordance with the ''General vehicle handling requirements'' per 40 CFR 86.132–96, up to and including the completion of the hot start exhaust test.

(b) The preconditioning procedure prescribed at 40 CFR 86.132–96 shall be observed for preconditioning vehicles between tests using the same fuel.

§§ 80.53–80.54 [Reserved]

§ 80.55 Measurement methods for benzene and 1,3-butadiene.

(a) Sampling for benzene and 1,3-butadiene must be accomplished by bag sampling as used for total hydrocarbons determination. This procedure is detailed in 40 CFR 86.109.

(b) Benzene and 1,3-butadiene must be analyzed by gas chromatography. Expected values for benzene and 1,3-butadiene in bag samples for the baseline fuel are 4.0 ppm and 0.30 ppm respectively. At least three standards ranging from at minimum 50% to 150% of these expected values must be used to calibrate the detector. An additional standard of at most 0.01 ppm must also be measured to determine the required limit of quantification as described in paragraph (d) of this section.

(c) The sample injection size used in the chromatograph must be sufficient to be above the laboratory determined limit of quantification (LOQ) as defined in paragraph (d) of this section for at least one of the bag samples. A control chart of the measurements of the standards used to determine the response, repeatability, and limit of quantitation of the instrumental method for 1,3-butadiene and benzene must be reported.

(d) As in all types of sampling and analysis procedures, good laboratory practices must be used. See, Lawrence, Principals of Environmental Analysis, 55 Analytical Chemistry 14, at 2210–2218 (1983) (copies may be obtained from the publisher, American Chemical Society, 1155 16th Street NW., Washington, DC 20036). Reporting reproducibility control charts and limits of detection measurements are integral procedures to assess the validity of the chosen analytical method. The repeatability of the test method must be determined by measuring a standard periodically during testing and recording the measured

values on a control chart. The control chart shows the error between the measured standard and the prepared standard concentration for the periodic testing. The error between the measured standard and the actual standard indicates the uncertainty in the analysis. The limit of detection (LOD) is determined by repeatedly measuring a blank and a standard prepared at a concentration near an assumed value of the limit of detection. If the average concentration minus the average of the blanks is greater than three standard deviations of these measurements, then the limit of detection is at least as low as the prepared standard. The limit of quantitation (LOQ) is defined as ten times the standard deviation of these measurements. This quantity defines the amount of sample required to be measured for a valid analysis.

(e) Other sampling and analytical techniques will be allowed if they can be proven to have equal specificity and equal or better limits of quantitation. Data from alternative methods that can be demonstrated to have equivalent or superior limits of detection, precision, and accuracy may be accepted by the Administrator with individual prior approval.

§80.56 Measurement methods for formaldehyde and acetaldehyde.

(a) Formaldehyde and acetaldehyde will be measured by drawing exhaust samples from heated lines through either 2,4–Dinitrophenylhydrazine (DNPH) impregnated cartridges or impingers filled with solutions of DNPH in acetonitrile (ACN) as described in §§86.109 and 86.140 of this chapter for formaldehyde analysis. Diluted exhaust sample volumes must be at least 15 L for impingers containing 20 ml of absorbing solution (using more absorbing solution in the impinger requires proportionally more gas sample to be taken) and at least 4 L for cartridges. As required in §86.109 of this chapter, two impingers or cartridges must be connected in series to detect breakthrough of the first impinger or cartridge.

(b) In addition, sufficient sample must be drawn through the collecting cartridges or impingers so that the measured quantity of aldehyde is sufficiently greater than the minimum limit of quantitation of the test method for at least a portion of the exhaust test procedure. The limit of quantitation is determined using the technique defined in §80.55(d).

(c) Each of the impinger samples are quantitatively transferred to a 25 mL volumetric flask (5 mL more than the sample impinger volume) and brought to volume with ACN. The cartridge samples are eluted in reversed direction by gravity feed with 6mL of ACN. The eluate is collected in a graduated test tube and made up to the 5mL mark with ACN. Both the impinger and cartridge samples must be analyzed by HPLC without additional sample preparation.

(d) The analysis of the aldehyde derivatives collected is accomplished with a high performance liquid chromatograph (HPLC). Standards consisting of the hydrazone derivative of formaldehyde and acetaldehyde are used to determine the response, repeatability, and limit of quantitation of the HPLC method chosen for acetaldehyde and formaldehyde.

(e) Other sampling and analytical techniques will be allowed if they can be proven to have equal specificity and equal or better limits of quantitation. Data from alternative methods that can be demonstrated to have equivalent or superior limits of detection, precision, and accuracy may be accepted by the Administrator with individual prior approval.

§§80.57–80.58 [Reserved]

§80.59 General test fleet requirements for vehicle testing.

(a) The test fleet must consist of only 1989–91 MY vehicles which are technologically equivalent to 1990 MY vehicles, or of 1986–88 MY vehicles for which no changes to the engine or exhaust system that would significantly affect emissions have been made through the 1990 model year. To be technologically equivalent vehicles at minimum must have closed-loop systems and possess adaptive learning.

(b) No maintenance or replacement of any vehicle component is permitted except when necessary to ensure operator safety or as specifically permitted

in § 80.60 and § 80.61. All vehicle maintenance procedures must be reported to the Administrator.

(c) Each vehicle in the test fleet shall have no fewer than 4,000 miles of accumulated mileage prior to being included in the test program.

[59 FR 7813, Feb. 16, 1994, as amended at 59 FR 36962, July 20, 1994]

§ 80.60 Test fleet requirements for exhaust emission testing.

(a) Candidate vehicles which conform to the emission performance requirements defined in paragraphs (b) through (d) of this section shall be obtained directly from the in-use fleet and tested in their as-received condition.

(b) Candidate vehicles for the test fleet must be screened for their exhaust VOC emissions in accordance with the provisions in § 80.62.

(c) On the basis of pretesting pursuant to paragraph (b) of this section, the test fleet shall be subdivided into two emitter group sub-fleets: the normal emitter group and the higher emitter group.

(1) Each vehicle with an exhaust total hydrocarbon (THC) emissions rate which is less than or equal to twice the applicable emissions standard shall be placed in the normal emitter group.

(2) Each vehicle with an exhaust THC emissions rate which is greater than two times the applicable emissions standard shall be placed in the higher emitter group.

(d) The test vehicles in each emitter group must conform to the requirements of paragraphs (d)(1) through (4) of this section.

(1) Test vehicles for the normal emitter sub-fleet must be selected from the list shown in this paragraph (d)(1). This list is arranged in order of descending vehicle priority, such that the order in which vehicles are added to the normal emitter sub-fleet must conform to the order shown (e.g., a ten-vehicle normal emitter group sub-fleet must consist of the first ten vehicles listed in this paragraph (d)(1)). If more vehicles are tested than the minimum number of vehicles required for the normal emitter sub-fleet, additional vehicles are to be added to the fleet in the order specified in this paragraph (d)(1), beginning with the next vehicle not already included in the group. The vehicles in the normal emitter sub-fleet must possess the characteristics indicated in the list. If the end of the list is reached in adding vehicles to the normal emitter sub-fleet and additional vehicles are desired then they shall be added beginning with vehicle number one, and must be added to the normal emitter sub-fleet in accordance with the order in Table A:

TABLE A—TEST FLEET DEFINITIONS

Veh. No.	Fuel system	Catalyst	Air injection	EGR	Tech. group	Manufacturer
1	Multi	3W	No Air	EGR	1	GM.
2	Multi	3W	No Air	No EGR	2	Ford.
3	TBI	3W	No Air	EGR	3	GM.
4	Multi	3W+OX	Air	EGR	4	Ford.
5	Multi	3W	No Air	EGR	1	Honda.
6	Multi	3W	No Air	No EGR	2	GM.
7	TBI	3W	No Air	EGR	3	Chrysler.
8	Multi	3W+OX	Air	EGR	4	GM.
9	TBI	3W+OX	Air	EGR	7	Chrysler.
10	Multi	3W	Air	EGR	5	Toyota.
11	Multi	3W	No Air	EGR	1	Ford.
12	Multi	3W	No Air	No EGR	2	Chrysler.
13	Carb	3W+OX	Air	EGR	9	Toyota.
14	TBI	3W	No Air	EGR	3	Ford.
15	Multi	3W+OX	Air	EGR	4	GM.
16	Multi	3W	No Air	EGR	1	Toyota.
17	Multi	3W	No Air	No EGR	2	Mazda.
18	TBI	3W	No Air	EGR	3	GM.
19	Multi	3W+OX	Air	EGR	4	Ford.
20	Multi	3W	No Air	EGR	1	Nissan.

TABLE B—TECH GROUP DEFINITIONS IN TABLE A

Tech group	Fuel system	Catalyst	Air injection	EGR
1	Multi	3W	No Air	EGR.
2	Multi	3W	No Air	No EGR.
3	TBI	3W	No Air	EGR.
4	Multi	3W+OX	Air	EGR.
5	Multi	3W	Air	EGR.
6	TBI	3W	Air	EGR.
7	TBI	3W+OX	Air	EGR.
8	TBI	3W	No Air	No EGR.
9	Carb	3W+OX	Air	EGR.

Legend:

Fuel system:
Multi=Multi-point fuel injection
TBI=Throttle body fuel injection
Carb=Carburetted

Catalyst:
3W=3–Way catalyst
3W+OX=3–Way catalyst plus an oxidation catalyst

Air Injection:
Air=Air injection

EGR=Exhaust gas recirculation

(2) Test vehicles for the higher emitter sub-fleet shall be selected from the in-use fleet in accordance with paragraphs (a) and (b) of this section and with §80.59. Test vehicles for the higher emitter sub-fleet are not required to follow the pattern established in paragraph (d)(1) of this section.

(3) The minimum test fleet size is 20 vehicles. Half of the vehicles tested must be included in the normal emitter sub-fleet and half of the vehicles tested must be in the higher emitter sub-fleet. If additional vehicles are tested beyond the minimum of twenty vehicles, the additional vehicles shall be distributed equally between the normal and higher emitter sub-fleets.

(4) For each emitter group sub-fleet, 70 ± 9.5% of the sub-fleet must be LDVs, & 30 ± 9.5% must be LDTs. LDTs include light-duty trucks class 1 (LDT1), and light-duty trucks class 2 (LDT2) up to 8500 lbs GVWR.

§80.61 [Reserved]

§80.62 Vehicle test procedures to place vehicles in emitter group sub-fleets.

One of the two following test procedures must be used to screen candidate vehicles for their exhaust THC emissions to place them within the emitter group sub-fleets in accordance with the requirements of §80.60.

(a) Candidate vehicles may be tested for their exhaust THC emissions using the federal test procedure as detailed in 40 CFR part 86, with gasoline conforming to requirements detailed in 40 CFR 86.113–90. The results shall be used in accordance with the requirements in §80.60 to place the vehicles within their respective emitter groups.

(b) Alternatively, candidate vehicles may be screened for their exhaust THC emissions with the IM240 short test procedure.[1] The results from the IM240 shall be converted into results comparable with the standard exhaust FTP as detailed in this paragraph (b) to place the vehicles within their respective emitter groups in accordance with the requirements of §80.60.

(1) A candidate vehicle with IM240 test results <0.367 grams THC per vehicle mile shall be classified as a normal emitter.

(2) A candidate vehicle with IM240 test results ≥0.367 grams THC per vehicle mile shall be classified as a higher emitter.

§§80.63–80.64 [Reserved]

§80.65 General requirements for refiners, importers, and oxygenate blenders.

(a) *Date requirements begin.* The requirements of this subpart D apply to all gasoline produced, imported, transported, stored, sold, or dispensed:

(1) At any location other than retail outlets and wholesale purchaser-consumer facilities on or after December 1, 1994; and

[1] EPA Technical Report EPA–AA–TSS–91–1. Copies may be obtained by ordering publication number PB92104405 from the National Technical Information Service, 5285 Port Royal Road, Springfield, Virginia 22161.

(2) At any location on or after January 1, 1995.

(b) *Certification of gasoline and RBOB.* Gasoline or RBOB sold or dispensed in a covered area must be certified under § 80.40.

(c) *Standards must be met on either a per-gallon or on an average basis.* (1) Any refiner or importer, for each batch of reformulated gasoline or RBOB it produces or imports, shall meet:

(i) Those standards and requirements it designated under paragraph (d) of this section for per-gallon compliance on a per-gallon basis; and

(ii) Those standards and requirements it designated under paragraph (d) of this section for average compliance on an average basis over the applicable averaging period; except that

(iii) Refiners and importers are not required to meet the oxygen standard for RBOB.

(2) Any oxygenate blender, for each batch of reformulated gasoline it produces by blending oxygenate with RBOB shall, subsequent to the addition of oxygenate, meet the oxygen standard either per-gallon or average over the applicable averaging period.

(3)(i) For each averaging period, and separately for each parameter that may be met either per-gallon or on average, any refiner shall designate for each refinery, and any importer or oxygenate blender shall designate, its gasoline or RBOB as being subject to the standard applicable to that parameter on either a per-gallon or average basis. For any specific averaging period and parameter all batches of gasoline or RBOB shall be designated as being subject to the per-gallon standard, or all batches of gasoline and RBOB shall be designated as being subject to the average standard. For any specific averaging period and parameter a refiner for a refinery, or any importer or oxygenate blender, may not designate certain batches as being subject to the per-gallon standard and others as being subject to the average standard.

(ii) In the event any refiner for a refinery, or any importer or oxygenate blender, fails to meet the requirements of paragraph (c)(3)(i) of this section and for a specific averaging period and parameter designates certain batches as being subject to the per-gallon standard and others as being subject to the average standard, all batches produced or imported during the averaging period that were designated as being subject to the average standard shall, *ab initio,* be redesignated as being subject to the per- gallon standard. This redesignation shall apply regardless of whether the batches in question met or failed to meet the per-gallon standard for the parameter in question.

(d) *Designation of gasoline.* Any refiner or importer of gasoline shall designate the gasoline it produces or imports as follows:

(1) All gasoline produced or imported shall be properly designated as either reformulated or conventional gasoline, or as RBOB.

(2) All gasoline designated as reformulated or as RBOB shall be further properly designated as:

(i) Either VOC-controlled or not VOC-controlled;

(ii) In the case of gasoline or RBOB designated as VOC-controlled, either intended for use in VOC-Control Region 1 or VOC-Control Region 2 (as defined in § 80.71);

(iii) Reformulated gasoline (but not RBOB) must be designated either as oxygenated fuels program reformulated gasoline, or not oxygenated fuels program reformulated gasoline.

(A) Gasoline must be designated as oxygenated fuels program reformulated gasoline if such gasoline:

(1) Has an oxygen content that is greater than or equal to 2.0 weight percent; and

(2) Arrives at a terminal from which gasoline is dispensed into trucks used to deliver gasoline to an oxygenated fuels control area within five days prior to the beginning of the oxygenated fuels control period for that control area.

(B) Gasoline may be designated as oxygenated fuels program reformulated gasoline if such gasoline has an oxygen content that is greater than or equal to 2.0 weight percent, regardless of whether the gasoline is intended for use in any oxygenated fuels program control area during an oxygenated fuels program control period.

(iv) For gasoline or RBOB produced, imported, sold, dispensed or used during the period January 1, 1995 through

December 31, 1997, either as being subject to the simple model standards, or to the complex model standards;

(v) For each of the following parameters, either gasoline or RBOB which meets the standard applicable to that parameter on a per-gallon basis or on average:

(A) Toxics emissions performance;

(B) NO_X emissions performance in the case of gasoline certified using the complex model.

(C) Benzene content;

(D) With the exception of RBOB, oxygen content;

(E) In the case of VOC-controlled gasoline or RBOB certified using the simple model, RVP; and

(F) In the case of VOC-controlled gasoline or RBOB certified using the complex model, VOC emissions performance; and

(vi) In the case of RBOB, as RBOB that may be blended with:

(A) Any oxygenate;

(B) Ether only;

(C) Any renewable oxygenate;

(D) Renewable ether only;

(E) Non-VOC controlled renewable ether only.

(3) Every batch of reformulated or conventional gasoline or RBOB produced or imported at each refinery or import facility, or each batch of blendstock produced and sold or transferred if blendstock accounting is required under § 80.102(e), shall be assigned a number (the ''batch number''), consisting of the EPA-assigned refiner, importer or oxygenate blender registration number, the EPA-assigned facility registration number, the last two digits of the year in which the batch was produced, and a unique number for the batch, beginning with the number one for the first batch produced or imported each calendar year and each subsequent batch during the calendar year being assigned the next sequential number (e.g., 4321–54321–95–000001, 4321–54321–95–000002, etc.).

(e) *Determination of properties.* (1) Each refiner or importer shall determine the value of each of the properties specified in paragraph (e)(2)(i) of this section for each batch of reformulated gasoline it produces or imports prior to the gasoline leaving the refinery or import facility, by collecting and analyzing a representative sample of gasoline taken from the batch, using the methodologies specified in § 80.46. This collection and analysis shall be carried out either by the refiner or importer, or by an independent laboratory. A batch of simple model reformulated gasoline may be released by the refiner or importer prior to the receipt of the refiner's or importer's test results except for test results for oxygen and benzene, and RVP in the case of VOC-controlled gasoline.

(2) In the event that the values of any of these properties is determined by the refiner or importer and by an independent laboratory in conformance with the requirements of paragraph (f) of this section:

(i) The results of the analyses conducted by the refiner or importer for such properties shall be used as the basis for compliance determinations unless the absolute value of the differences of the test results from the two laboratories is larger than the following values:

Fuel property	Range
Sulfur content	25 ppm
Aromatics content	2.7 vol %
Olefins content	2.5 vol %
Benzene content	0.21 vol %
Ethanol content	0.4 vol %
Methanol content	0.2 vol %
MTBE (and other methyl ethers) content	0.6 vol %
ETBE (and other ethyl ethers) content	0.6 vol %
TAME	0.6 vol %
t-Butanol content	0.6 vol %
RVP	0.3 psi
50% distillation (T50)	5 °F
90% distillation (T90)	5 °F
E200	2.5 vol %
E300	3.5 vol %
API Gravity	0.3 °API

(ii) In the event the values from the two laboratories for any property fall outside these ranges, the refiner or importer shall use as the basis for compliance determinations:

(A) The larger of the two values for the property, except the smaller of the two results shall be used for oxygenates; or

(B) The refiner shall have the gasoline analyzed for the property at one additional independent laboratory. If this second independent laboratory obtains a result for the property that is within the range, as listed in paragraph (e)(2)(i) of this section, of the refiner's or importer's result for this property,

then the refiner's or importer's result shall be used as the basis for compliance determinations.

(f) *Independent analysis requirement.* (1) Any refiner or importer of reformulated gasoline or RBOB shall carry out a program of independent sample collection and analyses for the reformulated gasoline it produces or imports, which meets the requirements of one of the following two options:

(i) *Option 1.* The refiner or importer shall, for each batch of reformulated gasoline or RBOB that is produced or imported, have the value for each property specified in paragraph (e)(2)(i) of this section determined by an independent laboratory that collects and analyzes a representative sample from the batch using the methodologies specified in § 80.46.

(ii) *Option 2.* The refiner or importer shall have a periodic independent testing program carried out for all reformulated gasoline produced or imported, which shall consist of the following:

(A) An independent laboratory shall collect a representative sample from each batch of reformulated gasoline that the refiner or importer produces or imports;

(B) EPA will identify up to ten percent of the total number of samples collected under paragraph (f)(1)(ii)(A) of this section; and

(C) The designated independent laboratory shall, for each sample identified by EPA under paragraph (f)(1)(ii)(B) of this section, determine the value for each property using the methodologies specified in § 80.46.

(2)(i) Any refiner or importer shall designate one independent laboratory for each refinery or import facility at which reformulated gasoline or RBOB is produced or imported. This independent laboratory will collect samples and perform analyses in compliance with the requirements of this paragraph (f) of this section.

(ii) Any refiner or importer shall identify this designated independent laboratory to EPA under the registration requirements of § 80.76.

(iii) In order to be considered independent:

(A) The laboratory shall not be operated by any refiner or importer, and shall not be operated by any subsidiary or employee of any refiner or importer;

(B) The laboratory shall be free from any interest in any refiner or importer; and

(C) The refiner or importer shall be free from any interest in the laboratory; however

(D) Notwithstanding the restrictions in paragraphs (f)(2)(iii) (A) through (C) of this section, a laboratory shall be considered independent if it is owned or operated by a gasoline pipeline company, regardless of ownership or operation of the gasoline pipeline company by refiners or importers, provided that such pipeline company is owned and operated by four or more refiners or importers.

(iv) Use of a laboratory that is debarred, suspended, or proposed for debarment pursuant to the Governmentwide Debarment and Suspension regulations, 40 CFR part 32, or the Debarment, Suspension and Ineligibility provisions of the Federal Acquisition Regulations, 48 CFR part 9, subpart 9.4, shall be deemed noncompliance with the requirements of this paragraph (f).

(v) Any laboratory that fails to comply with the requirements of this paragraph (f) shall be subject to debarment or suspension under Governmentwide Debarment and Suspension regulations, 40 CFR part 32, or the Debarment, Suspension and Ineligibility regulations, Federal Acquisition Regulations, 48 CFR part 9, subpart 9.4.

(3) Any refiner or importer shall, for all samples collected or analyzed pursuant to the requirements of this paragraph (f), cause its designated independent laboratory:

(i) At the time the designated independent laboratory collects a representative sample from a batch of reformulated gasoline, to:

(A) Obtain the refiner's or importer's assigned batch number for the batch being sampled;

(B) Determine the volume of the batch;

(C) Determine the identification number of the gasoline storage tank or tanks in which the batch was stored at the time the sample was collected;

(D) Determine the date and time the batch became finished reformulated

gasoline, and the date and time the sample was collected;

(E) Determine the grade of the batch (e.g., premium, mid-grade, or regular); and

(F) In the case of reformulated gasoline produced through computer-controlled in-line blending, determine the date and time the blending process began and the date and time the blending process ended, unless exempt under paragraph (f)(4) of this section;

(ii) To retain each sample collected pursuant to the requirements of this paragraph (f) for a period of 30 days, except that this period shall be extended to a period of up to 180 days upon request by EPA;

(iii) To submit to EPA periodic reports, as follows:

(A) A report for the period January through March shall be submitted by May 31; a report for the period April through June shall be submitted by August 31; a report for the period July through September shall be submitted by November 30; and a report for the period October through December shall be submitted by February 28;

(B) Each report shall include, for each sample of reformulated gasoline that was analyzed pursuant to the requirements of this paragraph (f):

(1) The results of the independent laboratory's analyses for each property; and

(2) The information specified in paragraph (f)(3)(i) of this section for such sample; and

(iv) To supply to EPA, upon EPA's request, any sample collected or a portion of any such sample.

(4) Any refiner that produces reformulated gasoline using computer-controlled in-line blending equipment is exempt from the independent sampling and testing requirements specified in paragraphs (f)(1) through (3) of this section and from the requirement of paragraph (e)(1) of this section to obtain test results for each batch prior to the gasoline leaving the refinery, provided that such refiner:

(i) Obtains from EPA an exemption from these requirements. In order to seek such an exemption, the refiner shall submit a petition to EPA, such petition to include:

(A) A description of the refiner's computer-controlled in-line blending operation, including a description of:

(1) The location of the operation;

(2) The length of time the refiner has used the operation;

(3) The volumes of gasoline produced using the operation since the refiner began the operation or during the previous three years, whichever is shorter, by grade;

(4) The movement of the gasoline produced using the operation to the point of fungible mixing, including any points where all or portions of the gasoline produced is accumulated in gasoline storage tanks;

(5) The physical lay-out of the operation;

(6) The automated control system, including the method of monitoring and controlling blend properties and proportions;

(7) Any sampling and analysis of gasoline that is conducted as a part of the operation, including on-line, off-line, and composite, and a description of the methods of sampling, the methods of analysis, the parameters analyzed and the frequency of such analyses, and any written, printed, or computer-stored results of such analyses, including information on the retention of such results;

(8) Any sampling and analysis of gasoline produced by the operation that occurs downstream from the blending operation prior to fungible mixing of the gasoline, including any such sampling and analysis by the refiner and by any purchaser, pipeline or other carrier, or by independent laboratories;

(9) Any quality assurance procedures that are carried out over the operation; and

(10) Any occasion(s) during the previous three years when the refiner adjusted any physical or chemical property of any gasoline produced using the operation downstream from the operation, including the nature of the adjustment and the reason the gasoline had properties that required adjustment; and

(B) A description of the independent audit program of the refiner's computer-controlled in-line blending operation that the refiner proposes will satisfy the requirements of this paragraph (f)(4); and

(ii) Carries out an independent audit program of the refiner's computer-controlled in-line blending operation, such program to include:

(A) For each batch of reformulated gasoline produced using the operation, a review of the documents generated that is sufficient to determine the properties and volume of the gasoline produced;

(B) Audits that occur no less frequently than annually;

(C) Reports of the results of such audits submitted to the refiner, and to EPA by the auditor no later than February 28 of each year;

(D) Audits that are conducted by an auditor that meets the non-debarred criteria specified in § 80.125 (a) and/or (d); and

(iii) Complies with any other requirements that EPA includes as part of the exemption.

(g) *Marking of conventional gasoline.* [Reserved]

(h) *Compliance audits.* Any refiner and importer of any reformulated gasoline or RBOB, and any oxygenate blender of any RBOB who meets the oxygen standard on average, shall have the reformulated gasoline and RBOB it produced, imported, or blended during each calendar year audited for compliance with the requirements of this subpart D, in accordance with the requirements of subpart F, at the conclusion of each calendar year.

(i) *Exclusion from compliance calculations of gasoline received from others.* Any refiner for each refinery, any oxygenate blender for each oxygenate blending facility, and any importer shall exclude from all compliance calculations the volume and properties of any reformulated gasoline that is produced at another refinery or oxygenate blending facility or imported by another importer.

[59 FR 7813, Feb. 16, 1994, as amended at 59 FR 36962, July 20, 1994; 59 FR 39289, Aug. 2, 1994; 59 FR 60715, Nov. 28, 1994]

EFFECTIVE DATE NOTE: At 59 FR 39289, Aug. 2, 1994, § 80.65 was amended by revising paragraph (d)(2)(vi) effective September 1, 1994. At 59 FR 60715, Nov. 28, 1994, the amendment was stayed effective September 13, 1994.

§ 80.66 Calculation of reformulated gasoline properties.

(a) All volume measurements required by these regulations shall be temperature adjusted to 60 degrees Fahrenheit.

(b) The percentage of oxygen by weight contained in a gasoline blend, based upon its percentage oxygenate by volume and density, shall exclude denaturants and water.

(c) The properties of reformulated gasoline consist of per-gallon values separately and individually determined on a batch-by-batch basis using the methodologies specified in § 80.46 for each of those physical and chemical parameters necessary to determine compliance with the standards to which the gasoline is subject, and per-gallon values for the VOC, NO_X, and toxics emissions performance standards to which the gasoline is subject.

(d) Per-gallon oxygen content shall be determined based upon the weight percent oxygen of a representative sample of gasoline, using the method set forth in § 80.46(g). The total oxygen content associated with a batch of gasoline (in percent-gallons) is calculated by multiplying the weight percent oxygen content times the volume.

(e) Per-gallon benzene content shall be determined based upon the volume percent benzene of a representative sample of a batch of gasoline by the method set forth in § 80.46(e). The total benzene content associated with a batch of gasoline (in percent-gallons) is calculated by multiplying the volume percent benzene content times the volume.

(f) Per-gallon RVP shall be determined based upon the measurement of RVP of a representative sample of a batch of gasoline by the sampling methodologies specified in Appendix D of this part and the testing methodology specified in Appendix E of this part. The total RVP value associated with a batch of gasoline (in RVP-gallons) is calculated by multiplying the RVP times the volume.

(g)(1) Per gallon values for VOC and NO_X emissions reduction shall be calculated using the methodology specified in §80.45 that is appropriate for the gasoline.

(2) Per-gallon values for toxic emissions performance reduction shall be established using:

(i) For gasoline subject to the simple model, the methodology under §80.42 that is appropriate for the gasoline; and

(ii) For gasoline subject to the complex model, the methodology specified in §80.45 that is appropriate for the gasoline.

(3) The total VOC, NO_X, and toxic emissions performance reduction values associated with a batch of gasoline (in percent reduction-gallons) is calculated by multiplying the per-gallon percent emissions performance reduction times the volume of the batch.

[59 FR 7813, Feb. 16, 1994, as amended at 59 FR 36963, July 20, 1994]

§80.67 Compliance on average.

The requirements of this section apply to all reformulated gasoline and RBOB produced or imported for which compliance with one or more of the requirements of §80.41 is determined on average (''averaged gasoline'').

(a) *Compliance survey required in order to meet standards on average.* (1) Any refiner, importer, or oxygenate blender that complies with the compliance survey requirements of §80.68 has the option of meeting the standards specified in §80.41 for average compliance in addition to the option of meeting the standards specified in §80.41 for per-gallon compliance; any refiner, importer, or oxygenate blender that does not comply with the survey requirements must meet the standards specified in §80.41 for per-gallon compliance, and does not have the option of meeting standards on average.

(2)(i)(A) A refiner or importer that produces or imports reformulated gasoline that exceeds the average standards for oxygen or benzene (but not for other parameters that have average standards) may use such gasoline to offset reformulated gasoline which does not achieve such average standards, but only if the reformulated gasoline that does not achieve such average standards is sold to ultimate consumers in the same covered area as was the reformulated gasoline which exceeds average standards; provided that

(B) Prior to the beginning of the averaging period when the averaging approach described in paragraph (a)(2)(i)(A) of this section is used, the refiner or importer obtains approval from EPA. In order to seek such approval, the refiner or importer shall submit a petition to EPA, such petition to include:

(1) The identification of the refiner and refinery, or importer, the covered area, and the averaging period; and

(2) A detailed description of the procedures the refiner or importer will use to ensure the gasoline is produced by the refiner or is imported by the importer and is used only in the covered area in question and is not used in any other covered area, and the record keeping, reporting, auditing, and other quality assurance measures that will be followed to establish the gasoline is used as intended; and

(C) The refiner or importer properly completes any requirements that are specified by EPA as conditions for approval of the petition.

(ii) Any refiner or importer that meets the requirements of paragraph (a)(2)(i) of this section will be deemed to have satisfied the compliance survey requirements of §80.68 for the covered area in question.

(b) *Scope of averaging.* (1) Any refiner shall meet all applicable averaged standards separately for each of the refiner's refineries;

(2)(i) Any importer shall meet all applicable averaged standards on the basis of all averaged reformulated gasoline and RBOB imported by the importer; except that

(ii) Any importer to whom different standards apply for gasoline imported at different facilities by operation of §80.41(i), shall meet the averaged standards separately for the averaged reformulated gasoline and RBOB imported into each group of facilities that is subject to the same standards; and

(3) Any oxygenate blender shall meet the averaged standard for oxygen separately for each of the oxygenate blender's oxygenate blending facilities, except that any oxygenate blender may

group the averaged reformulated gasoline produced at facilities at which gasoline is produced for use in a single covered area.

(c) *RVP and VOC emissions performance reduction compliance on average.* (1) The VOC-controlled reformulated gasoline and RBOB produced at any refinery or imported by any importer during the period January 1 through September 15 of each calendar year which is designated for average compliance for RVP or VOC emissions performance on average must meet the standards for RVP (in the case of a refinery or importer subject to the simple model standards) or the standards for VOC emissions performance reduction (in the case of a refinery or importer subject to the complex model standards) which are applicable to that refinery or importer as follows:

(i) Gasoline and RBOB designated for VOC Control Region 1 must meet the standards for that Region which are applicable to that refinery or importer; and

(ii) Gasoline and RBOB designated for VOC Control Region 2 must meet the standards for that Region which are applicable to that refinery or importer.

(2) In the case of a refinery or importer subject to the simple model standards, each gallon of reformulated gasoline and RBOB designated as being VOC-controlled may not exceed the maximum standards for RVP specified in § 80.41(b) which are applicable to that refiner or importer.

(3) In the case of a refinery or importer subject to the complex model standards, each gallon of reformulated gasoline designated as being VOC-controlled must equal or exceed the minimum standards for VOC emissions performance specified in § 80.41 which are applicable to that refinery or importer.

(d) *Toxics emissions reduction and benzene compliance on average.* (1) The averaging period for the requirements for benzene content and toxics emission performance is January 1 through December 31 of each year.

(2) The reformulated gasoline and RBOB produced at any refinery or imported by any importer during the toxics emissions performance and benzene averaging periods that is designated for average compliance for these parameters shall on average meet the standards specified for toxics emissions performance and benzene in § 80.41 which are applicable to that refinery or importer.

(3) Each gallon of reformulated gasoline may not exceed the maximum standard for benzene content specified in § 80.41 which is applicable to that refinery or importer.

(e) *NO_X compliance on average.* (1) The averaging period for NO_X emissions performance is January 1 through December 31 of each year.

(2) The requirements of this paragraph (e) apply separately to reformulated gasoline and RBOB in the following categories:

(i) All reformulated gasoline and RBOB that is designated as VOC-controlled; and

(ii) All reformulated gasoline and RBOB that is not designated as VOC-controlled.

(3) The reformulated gasoline and RBOB produced at any refinery or imported by any importer during the NO_X averaging period that is designated for average compliance for NO_X shall on average meet the standards for NO_X specified in § 80.41 that are applicable to that refinery or importer.

(4) Each gallon of reformulated gasoline must equal or exceed the minimum standards for NO_X emissions performance specified in § 80.41 which are applicable to that refinery or importer.

(f) *Oxygen compliance on average.* (1) The averaging period for the oxygen content requirements is January 1 through December 31 of each year.

(2) The requirements of this paragraph (f) apply separately to reformulated gasoline in the following categories:

(i) All reformulated gasoline;

(ii) All reformulated gasoline that is not designated as being OPRG; and

(iii) In the case of reformulated gasoline certified under the simple model, that which is designated as VOC- controlled.

(3) The reformulated gasoline produced at any refinery or imported by any importer during the oxygen averaging period that is designated for average compliance for oxygen shall on average meet the standards for oxygen

specified in § 80.41 that is applicable to that refinery or importer.

(4) The reformulated gasoline that is produced at any oxygenate blending facility by blending RBOB with oxygenate that is designated for average compliance for oxygen shall on average meet the standards for oxygen specified in § 80.41 that is applicable to that oxygenate blending facility.

(5) Each gallon of reformulated gasoline must meet the applicable minimum requirements, and in the case of simple model reformulated gasoline the minimum and maximum requirements, for oxygen content specified in § 80.41.

(g) *Compliance calculation.* To determine compliance with the averaged standards in § 80.41, any refiner for each of its refineries at which averaged reformulated gasoline or RBOB is produced, any oxygenate blender for each of its oxygenate blending facilities at which oxygen averaged reformulated gasoline is produced, and any importer that imports averaged reformulated gasoline or RBOB shall, for each averaging period and for each portion of gasoline for which standards must be separately achieved, and for each relevant standard, calculate:

(1)(i) The compliance total using the following formula:

$$\text{COMPLIANCE TOTAL} = \left(\sum_{i=1}^{n} V_i\right) \times \text{std}$$

where

V_i=the volume of gasoline batch i

std=the standard for the parameter being evaluated

n=the number of batches of gasoline produced or imported during the averaging period

and

(ii) The actual total using the following formula:

$$\text{ACTUAL TOTAL} = \sum_{i=1}^{n} (V_i \times \text{parm}_i)$$

where

V_i=the volume of gasoline batch i

parm_i=the parameter value of gasoline batch i

n=the number of batches of gasoline produced or imported during the averaging period

(2) For each standard, compare the actual total with the compliance total.

(3) For the VOC, NO_X, and toxics emissions performance and oxygen standards, the actual totals must be equal to or greater than the compliance totals to achieve compliance.

(4) For RVP and benzene standards, the actual total must be equal to or less than the compliance totals to achieve compliance.

(5) If the actual total for the oxygen standard is less than the compliance total, or if the actual total for the benzene standard is greater than the compliance total, credits for these parameters must be obtained from another refiner, importer or (in the case of oxygen) oxygenate blender in order to achieve compliance:

(i) The total number of oxygen credits required to achieve compliance is calculated by subtracting the actual total from the compliance total oxygen; and

(ii) The total number of benzene credits required to achieve compliance is calculated by subtracting the compliance total from the actual total benzene.

(6) If the actual total for the oxygen standard is greater than the compliance total, or if the actual total for the benzene standard is less than the compliance totals, credits for these parameters are generated:

(i) The total number of oxygen credits which may be traded to another refinery, importer, or oxygenate blender is calculated by subtracting the compliance total from the actual total for oxygen; and

(ii) The total number of benzene credits which may be traded to another refinery or importer is calculated by subtracting the actual total from the compliance total for benzene.

(h) *Credit transfers.* (1) Compliance with the averaged standards specified in § 80.41 for oxygen and benzene (but for no other standards or requirements) may be achieved through the transfer of oxygen and benzene credits provided that:

(i) The credits were generated in the same averaging period as they are used;

(ii) The credit transfer takes place no later than fifteen working days following the end of the averaging period in which the reformulated gasoline credits were generated;

(iii) The credits are properly created;

(iv) The credits are transferred directly from the refiner, importer, or oxygenate blender that creates the credits to the refiner, importer, or oxygenate blender that uses the credits to achieve compliance;

(v) Oxygen credits are generated, transferred, and used:

(A) In the case of gasoline subject to the simple model standards, only in the following categories:

(1) VOC-controlled, non-OPRG;

(2) Non-VOC-controlled, non-OPRG;

(3) Non-VOC-controlled, OPRG; and

(4) VOC-controlled, OPRG; and

(B) In the case of gasoline subject to the complex model standards, only in the following categories:

(1) OPRG; and

(2) Non-OPRG;

(vi) Oxygen credits generated from gasoline subject to the complex model standards are not used to achieve compliance for gasoline subject to the simple model standards;

(vii) Oxygen credits are not used to achieve compliance with the minimum oxygen content standards in § 80.41; and

(viii) Benzene credits are not used to achieve compliance with the maximum benzene content standards in § 80.41.

(2) No party may transfer any credits to the extent such a transfer would result in the transferor having a negative credit balance at the conclusion of the averaging period for which the credits were transferred. Any credits transferred in violation of this paragraph are improperly created credits.

(3) In the case of credits that were improperly created, the following provisions apply:

(i) Improperly created credits may not be used to achieve compliance, regardless of a credit transferee's good faith belief that it was receiving valid credits;

(ii) No refiner, importer, or oxygenate blender may create, report, or transfer improperly created credits; and

(iii) Where any credit transferor has in its balance at the conclusion of any averaging period both credits which were properly created and credits which were improperly created, the properly created credits will be applied first to any credit transfers before the transferor may apply any credits to achieve its own compliance.

(i) *Average compliance for reformulated gasoline produced or imported before January 1, 1995.* In the case of any reformulated gasoline that is intended to be used beginning January 1, 1995, but that is produced or imported prior to that date:

(1) Any refiner or importer may meet standards specified in § 80.41 for average compliance for such gasoline, provided the refiner or importer has the option of meeting standards on average for 1995 under paragraph (a) of this section, and provided the refiner or importer elects to be subject to average standards under § 80.65(c)(3); and

(2) Any average compliance gasoline under paragraph (i)(1) of this section shall be combined with average compliance gasoline produced during 1995 for purposes of compliance calculations under paragraph (g) of this section.

§ 80.68 Compliance surveys.

(a) *Compliance survey option 1.* In order to satisfy the compliance survey requirements, any refiner, importer, or oxygenate blender shall properly conduct a program of compliance surveys in accordance with a survey program plan which has been approved by the Administrator of EPA in each covered area which is supplied with any gasoline for which compliance is achieved on average that is produced by that refiner or oxygenate blender or imported by that importer. Such approval shall be based upon the survey program plan meeting the following criteria:

(1) The survey program shall consist of at least four surveys which shall occur during the following time periods: one survey during the period January 1 through May 31; two surveys during the period June 1 through September 15; and one survey during the period September 16 through December 31.

(2) The survey program shall meet the criteria stated in paragraph (c) of this section.

(3) In the event that any refiner, importer, or oxygenate blender fails to properly carry out an approved survey program, the refiner, importer, or oxygenate blender shall achieve compliance with all applicable standards on a per-gallon basis for the calendar year in which the failure occurs, and may not achieve compliance with any standard on an average basis during this calendar year. This requirement to achieve compliance per-gallon shall apply *ab initio* to the beginning of any calendar year in which the failure occurs, regardless of when during the year the failure occurs.

(b) *Compliance survey option 2.* A refiner, importer, or oxygenate blender shall be deemed to have satisfied the compliance survey requirements described in paragraph (a) of this section if a comprehensive program of surveys is properly conducted in accordance with a survey program plan which has been approved by the Administrator of EPA. Such approval shall be based upon the survey program plan meeting the following criteria:

(1) The initial schedule for the conduct of surveys shall be as follows:

(i) 120 surveys shall be conducted in 1995;

(ii) 80 surveys shall be conducted in 1996;

(iii) 60 surveys shall be conducted in 1997;

(iv) 50 surveys shall be conducted in 1998 and thereafter.

(2) This initial survey schedule shall be adjusted as follows:

(i) In the event one or more ozone nonattainment areas in addition to the nine specified in § 80.70, opt into the reformulated gasoline program, the number of surveys to be conducted in the year the area or areas opt into the program and in each subsequent year shall be increased according to the following formula:

$$ANS_i = \left(\frac{V_{opt-in}}{V_{orig}} \times NS_i \right) + NS_i$$

where:

ANS_i = the adjusted number of surveys for year i; i = the opt-in year and each subsequent year

NS_i = the number of surveys according to the schedule in paragraph (b)(1) of this section in year i; i = the opt-in year and each subsequent year

V_{opt-in} = the total volume of gasoline supplied to the opt-in covered areas in the year preceding the year of the opt-in

V_{orig} = the total volume of gasoline supplied to the original nine covered areas in the year preceding the year of the opt-in

(ii) In the event that any covered area fails a survey or survey series according to the criteria set forth in paragraph (c) of this section, the annual decreases in the numbers of surveys prescribed by paragraph (b)(1) of this section, as adjusted by paragraph (b)(2)(i) of this section, shall be adjusted as follows in the year following the year of the failure. Any such adjustment to the number of surveys shall remain in effect so long as any standard for the affected covered area has been adjusted to be more stringent as a result of a failed survey or survey series. The adjustments shall be calculated according to the following formula:

$$ANS_i = \left(\frac{V_{failed}}{V_{total}} \times \left(NS_{i-1} - NS_i \right) \right) + NS_i$$

where:

ANS_i = the adjusted number of surveys in year i; i = the year after the failure and each subsequent year

V_{failed} = the total volume of gasoline supplied to the covered area which failed the survey or survey series in the year of the failure

V_{total} = the total volume of gasoline supplied to all covered areas in the year of the failure

NS_i = the number of surveys in year i according to the schedule in paragraph (b)(1) of this section and as adjusted by paragraph (b)(2)(i) of this section; i = the year after the failure and each subsequent year

(3) The survey program shall meet the criteria stated in paragraph (c) of this section.

(4) On each occasion the comprehensive survey program does not occur as specified in the approved plan with regard to any covered area:

(i) Each refiner, importer, and oxygenate blender who supplied any reformulated gasoline or RBOB to the covered area and who has not satisfied the survey requirements described in paragraph (a) of this section shall be deemed to have failed to carry out an approved survey program; and

(ii) The covered area will be deemed to have failed surveys for VOC and NO_X emissions performance, and survey series for benzene and oxygen, and toxic and NO_X emissions performance.

(c) *General survey requirements.* (1) During the period January 1, 1995 through December 31, 1997:

(i) Any sample taken from a retail gasoline storage tank for which the three most recent deliveries were of gasoline designated as meeting:

(A) Simple model standards shall be considered a ''simple model sample''; or

(B) Complex model standards shall be considered a ''complex model sample.''

(ii) A survey shall consist of the combination of a simple model portion and a complex model portion, as follows:

(A) The simple model portion of a survey shall consist of all simple model samples that are collected pursuant to the applicable survey design in a single covered area during any consecutive seven-day period and that are not excluded under paragraph (c)(6) of this section.

(B) The complex model portion of a survey shall consist of all complex model samples that are collected pursuant to the applicable survey design in a single covered area during any consecutive seven-day period and that are not excluded under paragraph (c)(6) of this section.

(iii)(A) The simple model portion of each survey shall be representative of all gasoline certified using the simple model which is being dispensed in the covered area.

(B) The complex model portion of each survey shall be representative of all gasoline certified using the complex model which is being dispensed in the covered area.

(2) Beginning on January 1, 1998:

(i) A survey shall consist of all samples that are collected pursuant to the applicable survey design in a single covered area during any consecutive seven-day period and that are not excluded under paragraph (c)(6) of this section.

(ii) A survey shall be representative of all gasoline which is being dispensed in the covered area.

(3) A VOC survey, and prior to January 1, 2000, a NO_X survey, shall consist of any survey conducted during the period June 1 through September 15.

(4)(i) A toxics, oxygen, and benzene survey series shall consist of all surveys conducted in a single covered area during a single calendar year.

(ii) A NO_X survey series shall consist of all surveys conducted in a single covered area during the periods January 1 through May 31, and September 16 through December 31 during a single calendar year.

(5)(i) Each simple model sample included in a survey shall be analyzed for

oxygenate type and content, benzene content, aromatic hydrocarbon content, and RVP in accordance with the methodologies specified in § 80.46; and

(ii) Each complex model sample included in a survey shall be analyzed for oxygenate type and content, olefins, benzene, sulfur, and aromatic hydrocarbons, E–200, E–300, and RVP in accordance with the methodologies specified in § 80.46.

(6)(i) The results of each survey shall be based upon the results of the analysis of each sample collected during the course of the survey, unless the sample violates the applicable per-gallon maximum or minimum standards for the parameter being evaluated plus any enforcement tolerance that applies to the parameter (*e.g.*, a sample that violates the benzene per-gallon maximum plus any benzene enforcement tolerance but meets other per-gallon maximum and minimum standards would be excluded from the benzene survey, but would be included in the surveys for parameters other than benzene).

(ii) Any sample from a survey that violates any standard under § 80.41, or that constitutes evidence of the violation of any prohibition or requirement under this subpart D, may be used by the Administrator in an enforcement action for such violation.

(7) Each laboratory at which samples in a survey are analyzed shall participate in a correlation program with EPA to ensure the validity of analysis results.

(8)(i) The results of each simple model VOC survey shall be determined as follows:

(A) For each simple model sample from the survey, the VOC emissions reduction percentage shall be determined based upon the tested values for RVP and oxygen for that sample as applied to the VOC emissions reduction equation at § 80.42(a)(1) for VOC-Control Region 1 and § 80.42(a)(2) for VOC-Control Region 2;

(B) The VOC emissions reduction survey standard applicable to each covered area shall be calculated by using the VOC emissions equation at § 80.42(a)(1) with RVP=7.2 and OXCON=2.0 for covered areas located in VOC-Control Region 1 and using the VOC emissions equation at § 80.42(a)(2) with RVP=8.1 and OXCON=2.0 for covered areas located in VOC-Control Region 2; and

(C) The covered area shall have failed the simple model VOC survey if the VOC emissions reduction average of all survey samples is less than VOC emissions reduction survey standard calculated under paragraph (c)(8)(i)(B) of this section.

(ii) The results of each complex model VOC emissions reduction survey shall be determined as follows:

(A) For each complex model sample from the survey series, the VOC emissions reduction percentage shall be determined based upon the tested parameter values for that sample and the appropriate methodology for calculating VOC emissions reduction at § 80.45;

(B) The covered area shall have failed the complex model VOC survey if the VOC emissions reduction percentage average of all survey samples is less than the applicable per-gallon standard for VOC emissions reduction.

(9)(i) The results of each simple model toxics emissions reduction survey series conducted in any covered area shall be determined as follows:

(A) For each simple model sample from the survey series, the toxics emissions reduction percentage shall be determined based upon the tested parameter values for that sample and the appropriate methodology for calculating toxics emissions performance reduction at § 80.42.

(B) The annual average of the toxics emissions reduction percentages for all samples from a survey series shall be calculated according to the following formula:

$$AATER = \left(\left(\frac{\sum_{i=1}^{n_1} TER_{1,i}}{n_1} \right) \times 0.468 \right) + \left(\left(\frac{\sum_{i=1}^{n_2} TER_{2,i}}{n_2} \right) \times 0.532 \right)$$

where

AATER = the annual average toxics emissions reduction

$TER_{1,i}$ = the toxics emissions reduction for sample i of gasoline collected during the high ozone season

$TER_{2,i}$ = the toxics emissions reduction for sample i of gasoline collected outside the high ozone season

n_1 = the number of samples collected during the high ozone season

n_2 = the number of samples collected outside the high ozone season0

(C) The covered area shall have failed the simple model toxics survey series if the annual average toxics emissions reduction is less than the simple model per-gallon standard for toxics emissions reduction.

(ii) The results of each complex model toxics emissions reduction survey series conducted in any covered area shall be determined as follows:

(A) For each complex model sample from the survey series, the toxics emissions reduction percentage shall be determined based upon the tested parameter values for that sample and the appropriate methodology for calculating toxics emissions reduction at § 80.45;

(B) The annual average of the toxics emissions reduction percentages for all samples from a survey series shall be calculated according to the formula specified in paragraph (c)(9)(i)(B) of this section; and

(C) The covered area shall have failed the complex model toxics survey series if the annual average toxics emissions reduction is less than the applicable per-gallon complex model standard for toxics emissions reduction.

(10) The results of each NO_X emissions reduction survey and survey series shall be determined as follows:

(i) For each sample from the survey and survey series, the NO_X emissions reduction percentage shall be determined based upon the tested parameter values for that sample and the appropriate methodology for calculating NO_X emissions reduction at § 80.45; and

(ii) The covered area shall have failed the NO_X survey or survey series if the NO_X emissions reduction percentage average for all survey samples is less than the applicable Phase I or Phase II complex model per-gallon standard for NO_X emissions reduction.

(11) For any benzene content survey series conducted in any covered area the average benzene content for all samples from the survey series shall be calculated. If this annual average is greater than 1.000 percent by volume, the covered area shall have failed a benzene survey series.

(12) For any oxygen content survey series conducted in any covered area the average oxygen content for all samples from the survey series shall be calculated. If this annual average is less than 2.00 percent by weight, the covered area shall have failed an oxygen survey series.

(13) Each survey program shall:

(i) Be planned and conducted by a person who is independent of the refiner or importer (the surveyor). In order to be considered independent:

(A) The surveyor shall not be an employee of any refiner or importer;

(B) The surveyor shall be free from any obligation to or interest in any refiner or importer; and

(C) The refiner or importer shall be free from any obligation to or interest in the surveyor; and

(ii) Include procedures for selecting sample collection locations, numbers of samples, and gasoline compositions which will result in:

(A) Simple model surveys representing all gasoline certified using the simple model being dispensed at retail outlets within the covered area during the period of the survey; and

(B) Complex model surveys representing all gasoline certified using the complex model being dispensed at retail outlets within the covered area during the period of the survey; and

(iii) Include procedures such that the number of samples included in each survey assures that:

(A) In the case of simple model surveys, the average levels of oxygen, benzene, RVP, and aromatic hydrocarbons are determined with a 95% confidence level, with error of less than 0.1 psi for RVP, 0.05% for benzene (by volume), and 0.1% for oxygen (by weight); and

(B) In the case of complex model surveys, the average levels of oxygen, benzene, RVP, aromatic hydrocarbons, olefins, T–50, T–90 and sulfur are determined with a 95% confidence level, with error of less than 0.1 psi for RVP, 0.05% for benzene (by volume), 0.1% for oxygen (by weight), 0.5% for olefins (by volume), 5° F. for T–50 and T–90, and 10 ppm for sulfur; or an equivalent level of precision for the complex model-determined emissions parameters; and

(iv) Require that the surveyor shall:

(A) Not inform anyone, in advance, of the date or location for the conduct of any survey;

(B) Upon request by EPA made within thirty days following the submission of the report of a survey, provide a duplicate of any gasoline sample taken during that survey to EPA at a location to be specified by EPA each sample to be identified by the name and address of the facility where collected, the date of collection, and the classification of the sample as simple model or complex model; and

(C) At any time permit any representative of EPA to monitor the conduct of the survey, including sample collection, transportation, storage, and analysis; and

(v) Require the surveyor to submit to EPA a report of each survey, within thirty days following completion of the survey, such report to include the following information:

(A) The identification of the person who conducted the survey;

(B) An attestation by an officer of the surveyor company that the survey was conducted in accordance with the survey plan and that the survey results are accurate;

(C) If the survey was conducted for one refiner or importer, the identification of that party;

(D) The identification of the covered area surveyed;

(E) The dates on which the survey was conducted;

(F) The address of each facility at which a gasoline sample was collected, the date of collection, and the classification of the sample as simple model or complex model;

(G) The results of the analyses of simple model samples for oxygenate type and oxygen weight percent, benzene content, aromatic hydrocarbon content, and RVP, the calculated toxics emission reduction percentage, and for each survey conducted during the period June 1 through September 15 the VOC emissions reduction percentage calculated using the methodology specified in paragraph (c)(8)(i) of this section;

(H) The results of the analyses of complex model samples for oxygenate type and oxygen weight percent, benzene, aromatic hydrocarbon, and olefin content, E–200, E–300, and RVP, the calculated NO_X and toxics emissions reduction percentage, and for each survey conducted during the period June 1 through September 15 the calculated VOC emissions reduction percentage, except that beginning on January 1, 2000 NO_X emissions reduction percentages must be reported only for surveys conducted outside the period June 1 through September 15;

(I) The name and address of each laboratory where gasoline samples were analyzed;

(J) A description of the methodology utilized to select the locations for sample collection and the numbers of samples collected;

(K) For any samples which were excluded from the survey, a justification for such exclusion; and

(L) The average toxics emissions reduction percentage for simple model samples and the percentage for complex model samples, the average benzene and oxygen percentages, and for each survey conducted during the period June 1 through September 15, the average VOC emissions reduction percentage for simple model samples and

the percentage for complex model samples, the average NO_X emissions reduction percentage for all complex model samples collected prior to January 1, 2000, and the average NO_X emissions reduction percentage for samples collected outside the period June 1 through September 15 beginning on January 1, 2000;

(14) Each survey shall be conducted at a time and in a covered area selected by EPA no earlier than two weeks before the date of the survey.

(15) The procedure for seeking EPA approval for a survey program plan shall be as follows:

(i) The survey program plan shall be submitted to the Administrator of EPA for EPA's approval no later than September 1 of the year preceding the year in which the surveys will be conducted; and

(ii) Such submittal shall be signed by a responsible corporate officer of the refiner, importer, or oxygenate blender, or in the case of a comprehensive survey program plan, by an officer of the organization coordinating the survey program.

(16)(i) No later than December 1 of the year preceding the year in which the surveys will be conducted, the contract with the surveyor to carry out the entire survey plan shall be in effect, and an amount of money necessary to carry out the entire survey plan shall be paid to the surveyor or placed into an escrow account with instructions to the escrow agent to pay the money over to the surveyor during the course of the conduct of the survey plan.

(ii) No later than December 15 of the year preceding the year in which the surveys will be conducted, the Administrator of EPA shall be given a copy of the contract with the surveyor, proof that the money necessary to carry out the plan has either been paid to the surveyor or placed into an escrow account, and if placed into an escrow account, a copy of the escrow agreement.

[59 FR 7813, Feb. 16, 1994, as amended at 59 FR 36963, July 20, 1994; 62 FR 12576, Mar. 17, 1997]

§ 80.69 Requirements for downstream oxygenate blending.

The requirements of this section apply to all reformulated gasoline blendstock for oxygenate blending, or RBOB, to which oxygenate is added at any oxygenate blending facility.

(a) *Requirements for refiners and importers.* For any RBOB produced or imported, the refiner or importer of the RBOB shall:

(1) Produce or import the RBOB such that, when blended with a specified type and percentage of oxygenate, it meets the applicable standards for reformulated gasoline;

(2) In order to determine the properties of RBOB for purposes of calculating compliance with per-gallon or averaged standards, conduct tests on each batch of the RBOB by:

(i) Adding the specified type and amount of oxygenate to a representative sample of the RBOB; and

(ii) Determining the properties and characteristics of the resulting gasoline using the methodology specified in § 80.65(e);

(3) Carry out the independent analysis requirements specified in § 80.65(f);

(4) Determine properties of the RBOB which are sufficient to allow parties downstream from the refinery or import facility to establish, through sampling and testing, if the RBOB has been altered or contaminated such that it will not meet the applicable reformulated gasoline standards subsequent to the addition of the specified type and amount of oxygenate;

(5) Transfer ownership of the RBOB only to an oxygenate blender who is registered with EPA as such, or to an intermediate owner with the restriction that it only be transferred to a registered oxygenate blender;

(6) Have a contract with each oxygenate blender who receives any RBOB produced or imported by the refiner or importer that requires the oxygenate blender, or, in the case of a contract with an intermediate owner, that requires the intermediate owner to require the oxygenate blender to:

(i) Comply with blender procedures that are specified by the contract and are calculated to assure blending with the proper type and amount of oxygenate;

(ii) Allow the refiner or importer to conduct quality assurance sampling and testing of the reformulated gasoline produced by the oxygenate blender;

(iii) Stop selling any gasoline found to not comply with the standards under which the RBOB was produced or imported; and

(iv) Carry out the quality assurance sampling and testing that this section requires the oxygenate blender to conduct;

(*7*) Conduct a quality assurance sampling and testing program to be carried out at the facilities of each oxygenate blender who blends any RBOB produced or imported by the refiner or importer with any oxygenate, to determine whether the reformulated gasoline which has been produced through blending complies with the applicable standards, using the methodology specified in § 80.46 for this determination.

(i) The sampling and testing program shall be conducted as follows:

(A) All samples shall be collected subsequent to the addition of oxygenate, and either:

(*1*) Prior combining the resulting gasoline with any other gasoline; or

(*2*) In the case of truck splash blending, subsequent to the delivery of the gasoline to a retail outlet or wholesale purchaser-consumer facility provided that the three most recent deliveries to the retail outlet or wholesale purchaser facility were of gasoline produced using that refiner's or importer's RBOB, and provided that any discrepancy found through the retail outlet or wholesale purchaser facility sampling is followed-up with measures reasonably designed to discover the cause of the discrepancy; and

(B) Sampling and testing shall be at one of the following rates:

(*1*) In the case of RBOB which is blended with oxygenate in a gasoline storage tank, a rate of not less than one sample for every 400,000 barrels of RBOB produced or imported by that refiner or importer that is blended by that blender, or one sample every month, whichever is more frequent; or

(*2*) In the case of RBOB which is blended with oxygenate in gasoline delivery trucks through the use of computer-controlled in-line blending equipment, a rate of not less than one sample for every 200,000 barrels of RBOB produced or imported by that refiner or importer that is blended by that blender, or one sample every three months, whichever is more frequent; or

(*3*) In the case of RBOB which is blended with oxygenate in gasoline delivery trucks without the use of computer-controlled in-line blending equipment, a rate of not less than one sample for each 50,000 barrels of RBOB produced or imported by that refiner or importer which is blended, or one sample per month, whichever is more frequent;

(ii) In the event the test results for any sample indicate the gasoline does not comply with applicable standards (within the correlation ranges specified in § 80.65(e)(2)(i)), the refiner or importer shall:

(A) Immediately take steps to stop the sale of the gasoline that was sampled;

(B) Take steps which are reasonably calculated to determine the cause of the noncompliance and to prevent future instances of noncompliance;

(C) Increase the rate of sampling and testing to one of the following rates:

(*1*) In the case of RBOB which is blended with oxygenate in a gasoline storage tank, a rate of not less than one sample for every 200,000 barrels of RBOB produced or imported by that refiner or importer that is blended by that blender, or one sample every two weeks, whichever is more frequent; or

(*2*) In the case of RBOB which is blended with oxygenate in gasoline delivery trucks through the use of computer-controlled in-line blending equipment, a rate of not less than one sample for every 100,000 barrels of RBOB produced or imported by that refiner or importer that is blended by that blender, or one sample every two months, whichever is more frequent; or

(*3*) In the case of RBOB which is blended with oxygenate in gasoline delivery trucks without the use of computer-controlled in-line blending equipment, a rate of not less than one sample for each 25,000 barrels of RBOB produced or imported by that refiner or importer which is blended, or one sample every two weeks, whichever is more frequent;

(D) Continue the increased frequency of sampling and testing until the results of ten consecutive samples and tests indicate the gasoline complies with applicable standards, at which time the sampling and testing may be conducted at the original frequency;

(iii) This quality assurance program is in addition to any quality assurance requirements carried out by other parties;

(8) A refiner or importer of RBOB may, in lieu of the contractual and quality assurance requirements specified in paragraphs (a) (6) and (7) of this section, base its compliance calculations on the following assumptions:

(i) In the case of RBOB designated for any-oxygenate, assume that ethanol will be added;

(ii) In the case of RBOB designated for ether-only, assume that MTBE will be added; and

(iii) In the case of any-oxygenate and ether-only designated RBOB, assume that the volume of oxygenate added will be such that the resulting reformulated gasoline will have an oxygen content of 2.0 weight percent;

(9) Any refiner or importer who does not meet the contractual and quality assurance requirements specified in paragraphs (a) (6) and (7) of this section, and who does not designate its RBOB as ether-only or any-oxygenate, shall base its compliance calculations on the assumption that 4.0 volume percent ethanol is added to the RBOB; and

(10) Specify in the product transfer documentation for the RBOB each oxygenate type or types and amount or range of amounts which is consistent with the designation of the RBOB as any-oxygenate, or ether-only, and which, if blended with the RBOB will result in reformulated gasoline which:

(i) Has VOC, toxics, or NO_X emissions reduction percentages which are no lower than the percentages that formed the basis for the refiner's or importer's compliance determination for these parameters;

(ii) Has a benzene content and RVP level which are no higher than the values for these characteristics that formed the basis for the refiner's or importer's compliance determinations for these parameters; and

(iii) Will not cause the reformulated gasoline to violate any standard specified in § 80.41.

(b) *Requirements for oxygenate blenders.* For all RBOB received by any oxygenate blender, the oxygenate blender shall:

(1) Add oxygenate of the type(s) and amount (or within the range of amounts) specified in the product transfer documents for the RBOB;

(2) Designate each batch of the resulting reformulated gasoline as meeting the oxygen standard per-gallon or on average;

(3) Meet the standard requirements specified in § 80.65(c) and § 80.67(f), the record keeping requirements specified in § 80.74, and the reporting requirements specified in § 80.75; and

(4) In the case of each batch of reformulated gasoline which is designated for compliance with the oxygen standard on average:

(i) Determine the volume and the weight percent oxygen of the batch using the testing methodology specified in § 80.46;

(ii) Assign a number to the batch (the ''batch number''), beginning with the number one for the first batch produced each calendar year and each subsequent batch during the calendar year being assigned the next sequential number, and such numbers to be preceded by the oxygenate blender's registration number, the facility number, and the second two digits of the year in which the batch was produced (e.g., 4321–4321–95–001, 4321–4321–95–002, etc.); and

(iii) Meet the compliance audit requirements specified in § 80.65(h).

(c) *Additional requirements for terminal storage tank blending.* Any oxygenate blender who produces reformulated gasoline by blending any oxygenate with any RBOB in any gasoline storage tank, other than a truck used for delivering gasoline to retail outlets or wholesale purchaser-consumer facilities, shall, for each batch of reformulated gasoline so produced determine the oxygen content and volume of this gasoline prior to the gasoline leaving the oxygenate blending facility, using the methodology specified in § 80.46.

(d) *Additional requirements for distributors dispensing RBOB into trucks for*

blending. Any distributor who dispenses any RBOB into any truck which delivers gasoline to retail outlets or wholesale purchaser-consumer facilities, shall for such RBOB so dispensed:

(1) Transfer the RBOB only to an oxygenate blender who has registered with the Administrator of EPA as such;

(2) Transfer any RBOB designated as ether-only RBOB only if the distributor has a reasonable basis for knowing the oxygenate blender will blend an oxygenate other than ethanol with the RBOB; and

(3) Obtain from the oxygenate blender the oxygenate blender's EPA registration number.

(e) *Additional requirements for oxygenate blenders who blend oxygenate in trucks.* Any oxygenate blender who obtains any RBOB in any gasoline delivery truck shall:

(1) On each occasion it obtains RBOB from a distributor, supply the distributor with the oxygenate blender's EPA registration number;

(2) Conduct a quality assurance sampling and testing program to determine whether the proper type and amount of oxygenate is added to RBOB. The program shall be conducted as follows:

(i) All samples shall be collected subsequent to the addition of oxygenate, and either:

(A) Prior combining the resulting gasoline with any other gasoline; or

(B) Subsequent to the delivery of the gasoline to a retail outlet or wholesale purchaser-consumer facility provided that the three most recent deliveries to the retail outlet or wholesale purchaser facility were of gasoline that was produced by that oxygenate blender and that had the same oxygenate requirements, and provided that any discrepancy in oxygenate type or amount found through the retail outlet or wholesale purchaser facility sampling is followed-up with measures reasonably designed to discover the cause of the discrepancy;

(ii) Sampling and testing shall be at one of the following rates:

(A) In the case computer-controlled in-line blending is used, a rate of not less than one sample per each five hundred occasions RBOB and oxygenate are loaded into a truck by that oxygenate blender, or one sample every three months, whichever is more frequent; or

(B) In the case computer-controlled in-line blending is not used, a rate of not less than one sample per each one hundred occasions RBOB and oxygenate are blended in a truck by that oxygenate blender, or one sample per month, whichever is more frequent;

(iii) Sampling and testing shall be of the gasoline produced through one of the RBOB-oxygenate blends produced by that oxygenate blender;

(iv) Samples shall be analyzed for oxygenate type and oxygen content using the testing methodology specified at § 80.46; and

(v) In the event the testing results for any sample indicate the gasoline does not contain the specified type and amount of oxygenate (within the ranges specified in § 80.70(b)(2)(i)):

(A) Immediately stop selling (or where possible, to stop any transferee of the gasoline from selling) the gasoline which was sampled;

(B) Take steps to determine the cause of the noncompliance;

(C) Increase the rate of sampling and testing to one of the following rates:

(*1*) In the case computer-controlled in-line blending is used, a rate of not less than one sample per each two hundred and fifty occasions RBOB and oxygenate are loaded into a truck by that oxygenate blender, or one sample every six weeks, whichever is more frequent; or

(*2*) In the case computer-controlled in-line blending is not used, a rate of not less than one sample per each fifty occasions RBOB and oxygenate are blended in a truck by that oxygenate blender, or one sample every two weeks, whichever is more frequent; and

(D) This increased frequency shall continue until the results of ten consecutive samples and tests indicate the gasoline complies with applicable standards, at which time the frequency may revert to the original frequency.

(f) *Oxygenate blending with OPRG.* Notwithstanding the requirements for and restrictions on oxygenate blending provided in this section, any oxygenate blender may blend oxygenate with reformulated gasoline that is designated as OPRG, without meeting the record keeping and reporting requirements

that otherwise apply to oxygenate blenders, provided that the reformulated gasoline so produced is:

(1) Used in an oxygenated fuels program control area during an oxygenated fuels program control period; and

(2) ''Substantially similar'' under section 211(f)(1) of the Clean Air Act, or is permitted under a waiver granted by the Administrator under the authority of section 211(f)(4) of the Clean Air Act.

[59 FR 7813, Feb. 16, 1994, as amended at 59 FR 36964, July 20, 1994]

§ 80.70 Covered areas.

For purposes of subparts D, E, and F of this part, the covered areas are as follows:

(a) The Los Angeles-Anaheim-Riverside, California, area, comprised of:

(1) Los Angeles County;

(2) Orange County;

(3) Ventura County;

(4) That portion of San Bernadino County that lies south of latitude 35 degrees, 10 minutes north and west of longitude 115 degrees, 45 minutes west; and

(5) That portion of Riverside County, which lies to the west of a line described as follows:

(i) Beginning at the northeast corner of Section 4, Township 2 South, Range 5 East, a point on the boundary line common to Riverside and San Bernadino Counties;

(ii) Then southerly along section lines to the centerline of the Colorado River Aqueduct;

(iii) Then southeasterly along the centerline of said Colorado River Aqueduct to the southerly line of Section 36, Township 3 South, Range 7 East;

(iv) Then easterly along the township line to the northeast corner of Section 6, Township 4 South, Range 9 East;

(v) Then southerly along the easterly line of Section 6 to the southeast corner thereof;

(vi) Then easterly along section lines to the northeast corner of Section 10, Township 4 South, Range 9 East;

(vii) Then southerly along section lines to the southeast corner of Section 15, Township 4 South, Range 9 East;

(viii) Then easterly along the section lines to the northeast corner of Section 21, Township 4 South, Range 10 East;

(ix) Then southerly along the easterly line of Section 21 to the southeast corner thereof;

(x) Then easterly along the northerly line of Section 27 to the northeast corner thereof;

(xi) Then southerly along section lines to the southeast corner of Section 34, Township 4 South, Range 10 East;

(xii) Then easterly along the township line to the northeast corner of Section 2, Township 5 South, Range 10 East;

(xiii) Then southerly along the easterly line of Section 2, to the southeast corner thereof;

(xiv) Then easterly along the northerly line of Section 12 to the northeast corner thereof;

(xv) Then southerly along the range line to the southwest corner of Section 18, Township 5 South, Range 11 East;

(xvi) Then easterly along section lines to the northeast corner of Section 24, Township 5 South, Range 11 East; and

(xvii) Then southerly along the range line to the southeast corner of Section 36, Township 8 South, Range 11 East, a point on the boundary line common to Riverside and San Diego Counties.

(b) San Diego County, California.

(c) The Greater Connecticut area, comprised of:

(1) The following Connecticut counties:

(i) Hartford;

(ii) Middlesex;

(iii) New Haven;

(iv) New London;

(v) Tolland;

(vi) Windham; and

(2) Portions of certain Connecticut counties, described as follows:

(i) In Fairfield County, the City of Shelton; and

(ii) In Litchfield County, all cities and townships except the towns of Bridgewater and New Milford.

(d) The New York-Northern New Jersey-Long Island-Connecticut area, comprised of:

(1) Portions of certain Connecticut counties, described as follows:

(i) In Fairfield County, all cities and townships except Shelton City;

(ii) In Litchfield County, the towns of Bridgewater and New Milford;

(2) The following New Jersey counties:
(i) Bergen;
(ii) Essex;
(iii) Hudson;
(iv) Hunterdon;
(v) Middlesex;
(vi) Monmouth;
(vii) Morris;
(viii) Ocean;
(ix) Passaic;
(x) Somerset;
(xi) Sussex;
(xii) Union; and
(3) The following New York counties:
(i) Bronx;
(ii) Kings;
(iii) Nassau;
(iv) New York (Manhattan);
(v) Queens;
(vi) Richmond;
(vii) Rockland;
(viii) Suffolk;
(ix) Westchester;
(x) Orange; and
(xi) Putnam.

(e) The Philadelphia-Wilmington-Trenton area, comprised of:
(1) The following Delaware counties:
(i) New Castle; and
(ii) Kent;
(2) Cecil County, Maryland;
(3) The following New Jersey counties:
(i) Burlington;
(ii) Camden;
(iii) Cumberland;
(iv) Gloucester;
(v) Mercer;
(vi) Salem; and
(4) The following Pennsylvania counties:
(i) Bucks;
(ii) Chester;
(iii) Delaware;
(iv) Montgomery; and
(v) Philadelphia.

(f) The Chicago-Gary-Lake County, Illinois-Indiana-Wisconsin area, comprised of:
(1) The following Illinois counties:
(i) Cook;
(ii) Du Page;
(iii) Kane;
(iv) Lake;
(v) McHenry;
(vi) Will;
(2) Portions of certain Illinois counties, described as follows:
(i) In Grundy County, the townships of Aux Sable and Goose Lake; and
(ii) In Kendall County, Oswego township; and
(3) The following Indiana counties:
(i) Lake; and
(ii) Porter.

(g) The Baltimore, Maryland area, comprised of:
(1) The following Maryland counties:
(i) Anne Arundel;
(ii) Baltimore;
(iii) Carroll;
(iv) Harford;
(v) Howard; and
(2) The City of Baltimore.

(h) The Houston-Galveston-Brazoria, Texas area, comprised of the following Texas counties:
(1) Brazoria;
(2) Fort Bend;
(3) Galveston;
(4) Harris;
(5) Liberty;
(6) Montgomery;
(7) Waller; and
(8) Chambers.

(i) The Milwaukee-Racine, Wisconsin area, comprised of the following Wisconsin counties:
(1) Kenosha;
(2) Milwaukee;
(3) Ozaukee;
(4) Racine;
(5) Washington; and
(6) Waukesha.

(j) The ozone nonattainment areas listed in this paragraph (j) are covered areas for purposes of subparts D, E, and F of this part. The geographic extent of each covered area listed in this paragraph (j) shall be the nonattainment area boundaries as specified in 40 CFR part 81, subpart C:
(1) Sussex County, Delaware;
(2) District of Columbia portion of the Washington ozone nonattainment area;
(3) The following Kentucky counties:
(i) Boone;
(ii) Campbell;
(iii) Jefferson; and
(iv) Kenton;
(4) Portions of the following Kentucky counties:
(i) Portion of Bullitt County described as follows:
(A) Beginning at the intersection of Ky 1020 and the Jefferson-Bullitt County Line proceeding to the east along

the county line to the intersection of county road 567 and the Jefferson-Bullitt County Line;

(B) Proceeding south on county road 567 to the junction with Ky 1116 (also known as Zoneton Road);

(C) Proceeding to the south on KY 1116 to the junction with Hebron Lane;

(D) Proceeding to the south on Hebron Lane to Cedar Creek;

(E) Proceeding south on Cedar Creek to the confluence of Floyds Fork turning southeast along a creek that meets Ky 44 at Stallings Cemetery;

(F) Proceeding west along Ky 44 to the eastern most point in the Shepherdsville city limits;

(G) Proceeding south along the Shepherdsville city limits to the Salt River and west to a point across the river from Mooney Lane;

(H) Proceeding south along Mooney Lane to the junction of Ky 480;

(I) Proceeding west on Ky 480 to the junction with Ky 2237;

(J) Proceeding south on Ky 2237 to the junction with Ky 61 and proceeding north on Ky 61 to the junction with Ky 1494;

(K) Proceeding south on Ky 1494 to the junction with the perimeter of the Fort Knox Military Reservation;

(L) Proceeding north along the military reservation perimeter to Castleman Branch Road;

(M) Proceeding north on Castleman Branch Road to Ky 44;

(N) Proceeding a very short distance west on Ky 44 to a junction with Ky 1020; and

(O) Proceeding north on Ky 1020 to the beginning.

(ii) Portion of Oldham County described as follows:

(A) Beginning at the intersection of the Oldham-Jefferson County Line with the southbound lane of Interstate 71;

(B) Proceeding to the northeast along the southbound lane of Interstate 71 to the intersection of Ky 329 and the southbound lane of Interstate 71;

(C) Proceeding to the northwest on Ky 329 to the intersection of Zaring Road on Ky 329;

(D) Proceeding to the east-northeast on Zaring Road to the junction of Cedar Point Road and Zaring Road;

(E) Proceeding to the north-northeast on Cedar Point Road to the junction of Ky 393 and Cedar Point Road;

(F) Proceeding to the south-southeast on Ky 393 to the junction of county road 746 (the road on the north side of Reformatory Lake and the Reformatory);

(G) Proceeding to the east-northeast on county road 746 to the junction with Dawkins Lane (also known as Saddlers Mill Road) and county road 746;

(H) Proceeding to follow an electric power line east-northeast across from the junction of county road 746 and Dawkins Lane to the east-northeast across Ky 53 on to the La Grange Water Filtration Plant;

(I) Proceeding on to the east-southeast along the power line then south across Fort Pickens Road to a power substation on Ky 146;

(J) Proceeding along the power line south across Ky 146 and the Seaboard System Railroad track to adjoin the incorporated city limits of La Grange;

(K) Then proceeding east then south along the La Grange city limits to a point abutting the north side of Ky 712;

(L) Proceeding east-southeast on Ky 712 to the junction of Massie School Road and Ky 712;

(M) Proceeding to the south-southwest and then north-northwest on Massie School Road to the junction of Ky 53 and Massie School Road;

(N) Proceeding on Ky 53 to the north-northwest to the junction of Moody Lane and Ky 53;

(O) Proceeding on Moody Lane to the south-southwest until meeting the city limits of La Grange;

(P) Then briefly proceeding north following the La Grange city limits to the intersection of the northbound lane of Interstate 71 and the La Grange city limits;

(Q) Proceeding southwest on the northbound lane of Interstate 71 until intersecting with the North Fork of Currys Fork;

(R) Proceeding south-southwest beyond the confluence of Currys Fork to the south-southwest beyond the confluence of Floyds Fork continuing on to the Oldham-Jefferson County Line; and

(S) Proceeding northwest along the Oldham-Jefferson County Line to the beginning.

(5) The following Maine counties:

(i) Androscoggin;

(ii) Cumberland;

(iii) Kennebec;

(iv) Knox;

(v) Lincoln;

(vi) Sagadahoc;

(vii) York;

(6) The following Maryland counties:

(i) Calvert;

(ii) Charles;

(iii) Frederick;

(iv) Montgomery;

(v) Prince Georges;

(vi) Queen Anne's; and

(vii) Kent;

(7) The entire State of Massachusetts;

(8) The following New Hampshire counties:

(i) Strafford;

(ii) Merrimack;

(iii) Hillsborough; and

(iv) Rockingham;

(9) The following New Jersey counties:

(i) Atlantic;

(ii) Cape May; and

(iii) Warren;

(10) The following New York counties:

(i) Dutchess;

(ii) The portion of Essex County that consists of the portion of Whiteface Mountain above 4,500 feet in elevation.

(11) The entire State of Rhode Island;

(12) The following Texas counties: and

(i) Collin;

(ii) Dallas;

(iii) Denton; and

(iv) Tarrant;

(13) The following Virginia areas:

(i) Alexandria;

(ii) Arlington County;

(iii) Fairfax;

(iv) Fairfax County;

(v) Falls Church;

(vi) Loudoun County;

(vii) Manassas;

(viii) Manassas Park;

(ix) Prince William County;

(x) Stafford County;

(xi) Charles City County;

(xii) Chesterfield County;

(xiii) Colonial Heights;

(xiv) Hanover County;

(xv) Henrico County;

(xvi) Hopewell;

(xvii) Richmond;

(xviii) Chesapeake;

(xix) Hampton;

(xx) James City County;

(xxi) Newport News;

(xxii) Norfolk;

(xxiii) Poquoson;

(xxiv) Portsmouth;

(xxv) Suffolk;

(xxvi) Virginia Beach;

(xxvii) Williamsburg; and

(xxviii) York County.

(k) Any other area classified under 40 CFR part 81, subpart C as a marginal, moderate, serious, or severe ozone nonattainment area may be included on petition of the governor of the state in which the area is located. Effective one year after an area has been reclassified as a severe ozone nonattainment area, such severe area shall also be a covered area for purposes of this subpart D.

(l) Upon the effective date for removal under §80.72(a), the geographic area covered by such approval shall no longer be considered a covered area for purposes of subparts D, E and F of this part.

(m) The prohibitions of section 211(k)(5) will apply to all persons other than retailers and wholesale purchaser-consumers July 3, 1997. The prohibitions of section 211(k)(5) will apply to retailers and wholesale purchaser-consumers August 4, 1997. As of the effective date for retailers and wholesale purchaser-consumers, the Phoenix, Arizona ozone nonattainment area is a covered area. The geographical extent of the covered area listed in this paragraph shall be the nonattainment boundaries for the Phoenix ozone nonattainment area as specified in 40 CFR 81.303.

[59 FR 7813, Feb. 16, 1994, as amended at 59 FR 36964, July 20, 1994; 60 FR 2699, Jan 11, 1995; 60 FR 35491, July 10, 1995; 61 FR 35680, July 8, 1996; 62 FR 30270, June 3, 1997]

EFFECTIVE DATE NOTE: At 62 FR 30270, June 3, 1997, §80.70 was amended by adding paragraph (m), effective July 3, 1997.

§ 80.71 Descriptions of VOC-control regions.

(a) Reformulated gasoline covered areas which are located in the following states are included in VOC-Control Region 1:

Alabama
Arizona
Arkansas
California
Colorado
District of Columbia
Florida
Georgia
Kansas
Louisiana
Maryland
Mississippi
Missouri
Nevada
New Mexico
North Carolina
Oklahoma
Oregon
South Carolina
Tennessee
Texas
Utah
Virginia

(b) Reformulated gasoline covered areas which are located in the following states are included in VOC-Control Region 2:

Connecticut
Delaware
Idaho
Illinois
Indiana
Iowa
Kentucky
Maine
Massachusetts
Michigan
Minnesota
Montana
Nebraska
New Hampshire
New Jersey
New York
North Dakota
Ohio
Pennsylvania
Rhode Island
South Dakota
Vermont
Washington
West Virginia
Wisconsin
Wyoming

(c) Reformulated gasoline covered areas which are partially in VOC Control Region 1 and partially in VOC Control Region 2 shall be included in VOC Control Region 1, except in the case of the Philadelphia-Wilmington-Trenton CMSA which shall be included in VOC Control Region 2.

§ 80.72 Procedures for opting out of the covered areas.

(a) For petitions received prior to and including December 31, 1997 and in accordance with paragraph (b) of this section, the Administrator may approve a petition from a state asking for removal of any opt-in area, or portion of an opt-in area, from inclusion as a covered area under § 80.70. If the Administrator approves a petition, he or she shall set an effective date as provided in paragraph (c) of this section. The Administrator shall notify the state in writing of the Agency's action on the petition and the effective date of the removal when the petition is approved.

(b) To be approved under paragraph (a) of this section, a petition must be signed by the governor of a state, or his or her authorized representative, and must include the following:

(1) A geographic description of each opt-in area, or portion of each opt-in area, which is covered by the petition;

(2) A description of all ways in which reformulated gasoline is relied upon as a control measure in any approved state or local implementation plan or plan revision, or in any submission to the Agency containing any proposed plan or plan revision (and any associated request for redesignation) that is pending before the Agency when the petition is submitted; and

(3) For any opt-in areas covered by the petition for which reformulated gasoline is relied upon as a control measure as described under paragraph (b)(2) of this section, the petition shall include the following information:

(i) Identify whether the state is withdrawing any such pending plan submission;

(ii)(A) Identify whether the state intends to submit a revision to any such approved plan provision or pending plan submission that does not rely on

reformulated gasoline as a control measure, and describe the alternative air quality measures, if any, that the state plans to use to replace reformulated gasoline as a control measure;

(B) A description of the current status of any proposed revision to any such approved plan provision or pending plan submission, as well as a projected schedule for submission of such proposed revision;

(iii) If the state is not withdrawing any such pending plan submission and does not intend to submit a revision to any such approved plan provision or pending plan submission, describe why no revision is necessary;

(iv) If reformulated gasoline is relied upon in any pending plan submission, other than as a contingency measure consisting of a future opt-in, and the Agency has found such pending plan submission complete or made a protectiveness finding under 40 CFR 51.448 and 93.128, demonstrate whether the removal of the reformulated gasoline program will affect the completeness and/or protectiveness determinations;

(4) The Governor of a State, or his or her authorized representative, shall submit additional information upon request of the Administrator,

(c) (1) Except as provided in paragraph (c)(2) of this section, the Administrator shall set an effective date for removal of an area under paragraph (a) of this section of 90 days from the Agency's written notification to the state approving the opt-out petition.

(2) If reformulated gasoline is contained as an element of any plan or plan revision that has been approved by the Agency, other than as a contingency measure consisting of a future opt-in, then the effective date under paragraph (a) of this section shall be 90 days from the effective date for Agency approval of a revision to the plan that removes reformulated gasoline as a control measure.

(d) The Administrator shall publish a notice in the FEDERAL REGISTER announcing the approval of any petition under paragraph (a) of this section, and the effective date for removal.

[61 FR 35680, July 8, 1996]

§80.73 Inability to produce conforming gasoline in extraordinary circumstances.

In appropriate extreme and unusual circumstances (e.g., natural disaster or Act of God) which are clearly outside the control of the refiner, importer, or oxygenate blender and which could not have been avoided by the exercise of prudence, diligence, and due care, EPA may permit a refiner, importer, or oxygenate blender, for a brief period, to distribute gasoline which does not meet the requirements for reformulated gasoline, if:

(a) It is in the public interest to do so (e.g., distribution of the nonconforming gasoline is necessary to meet projected shortfalls which cannot otherwise be compensated for);

(b) The refiner, importer, or oxygenate blender exercised prudent planning and was not able to avoid the violation and has taken all reasonable steps to minimize the extent of the nonconformity;

(c) The refiner, importer, or oxygenate blender can show how the requirements for reformulated gasoline will be expeditiously achieved;

(d) The refiner, importer, or oxygenate blender agrees to make up air quality detriment associated with the nonconforming gasoline, where practicable; and

(e) The refiner, importer, or oxygenate blender pays to the U.S. Treasury an amount equal to the economic benefit of the nonconformity minus the amount expended, pursuant to paragraph (d) of this section, in making up the air quality detriment.

§80.74 Recordkeeping requirements.

All parties in the gasoline distribution network, as described in this section, shall maintain records containing the information as required in this section. These records shall be retained for a period of five years from the date of creation, and shall be delivered to the Administrator of EPA or to the Administrator's authorized representative upon request.

(a) *All regulated parties.* Any refiner, importer, oxygenate blender, carrier, distributor, reseller, retailer, or wholesale-purchaser who sells, offers for sale, dispenses, supplies, offers for supply,

stores, transports, or causes the transportation of any reformulated gasoline or RBOB, shall maintain records containing the following information:

(1) The product transfer documentation for all reformulated gasoline or RBOB for which the party is the transferor or transferee; and

(2) For any sampling and testing on RBOB or reformulated gasoline:

(i) The location, date, time, and storage tank or truck identification for each sample collected;

(ii) The identification of the person who collected the sample and the person who performed the testing;

(iii) The results of the tests; and

(iv) The actions taken to stop the sale of any gasoline found not to be in compliance, and the actions taken to identify the cause of any noncompliance and prevent future instances of noncompliance.

(b) *Refiners and importers.* In addition to other requirements of this section, any refiner and importer shall, for all reformulated gasoline and RBOB produced or imported, maintain records containing the following information:

(1) Results of the tests to determine reformulated gasoline properties and characteristics specified in § 80.65;

(2) Results of the tests for the presence of the marker specified in § 80.82;

(3) The volume of gasoline associated with each of the above test results using the method normally employed at the refinery or import facility for this purpose;

(4) In the case of RBOB:

(i) The results of tests to ensure that, following blending, RBOB meets applicable standards; and

(ii) Each contract with each oxygenate blender to whom the refiner or importer transfers RBOB; or

(iii) Compliance calculations described in § 80.69(a)(8) based on an assumed addition of oxygenate;

(5) In the case of any refinery or importer subject to the simple model standards, the calculations used to determine the 1990 baseline levels of sulfur, T–90, and olefins, and the calculations used to determine compliance with the standards for these parameters; and

(6) In the case of any refinery or importer subject to the complex model standards before January 1, 1998, the calculations used to determine the baseline levels of VOC, toxics, and NO_x emissions performance.

(c) *Refiners, importers and oxygenate blenders of averaged gasoline.* In addition to other requirements of this section, any refiner, importer, and oxygenate blender who produces or imports any reformulated gasoline for which compliance with one or more applicable standard is determined on average shall maintain records containing the following information:

(1) The calculations used to determine compliance with the relevant standards on average, for each averaging period and for each quantity of gasoline for which standards must be separately achieved; and

(2) For any credits bought, sold, traded or transferred pursuant to § 80.67(h), the dates of the transactions, the names and EPA registration numbers of the parties involved, and the number(s) and type(s) of credits transferred.

(d) *Oxygenate blenders.* In addition to other requirements of this section, any oxygenate blender who blends any oxygenate with any RBOB shall, for each occasion such terminal storage tank blending occurs, maintain records containing the following information:

(i) The date, time, location, and identification of the blending tank or truck in which the blending occurred;

(ii) The volume and oxygenate requirements of the RBOB to which oxygenate was added; and

(iii) The volume, type, and purity of the oxygenate which was added, and documents which show the source(s) of the oxygenate used.

(e) *Distributors who dispense RBOB into trucks.* In addition to other requirements of this section, any distributor who dispenses any RBOB into a truck used for delivering gasoline to retail outlets shall, for each occasion RBOB is dispensed into such a truck, obtain records identifying:

(1) The name and EPA registration number of the oxygenate blender that received the RBOB; and

(2) The volume and oxygenate requirements of the RBOB dispensed.

(f) *Conventional gasoline requirement.* In addition to other requirements of

this section, any refiner and importer shall, for all conventional gasoline produced or imported, maintain records showing the blending of the marker required under §80.82 into conventional gasoline, and the results of the tests showing the concentration of this marker subsequent to its addition.

(g) *Retailers before January 1, 1998.* Prior to January 1, 1998 any retailer that sells or offers for sale any reformulated gasoline shall maintain at each retail outlet the product transfer documentation for the most recent three deliveries to the retail outlet of each grade of reformulated gasoline sold or offered for sale at the retail outlet, and shall make such documentation available to any person conducting any gasoline compliance survey pursuant to §80.68.

§80.75 Reporting requirements.

Any refiner, importer, and oxygenate blender shall report as specified in this section, and shall report such other information as the Administrator may require.

(a) *Quarterly reports for reformulated gasoline.* Any refiner or importer that produces or imports any reformulated gasoline or RBOB, and any oxygenate blender that produces reformulated gasoline meeting the oxygen standard on average, shall submit quarterly reports to the Administrator for each refinery or oxygenate blending facility at which such reformulated gasoline or RBOB was produced and for all such reformulated gasoline or RBOB imported by each importer.

(1) The quarterly reports shall be for all such reformulated gasoline or RBOB produced or imported during the following time periods:

(i) The first quarterly report shall include information for reformulated gasoline or RBOB produced or imported from January 1 through March 31, and shall be submitted by May 31 of each year beginning in 1995;

(ii) The second quarterly report shall include information for reformulated gasoline or RBOB produced or imported from April 1 through June 30, and shall be submitted by August 31 of each year beginning in 1995;

(iii) The third quarterly report shall include information for reformulated gasoline or RBOB produced or imported from July 1 through September 30, and shall be submitted by November 30 of each year beginning in 1995; and

(iv) The fourth quarterly report shall include information for reformulated gasoline or RBOB produced or imported from October 1 through December 31, and shall be submitted by the last day of February of each year beginning in 1996.

(2) The following information shall be included in each quarterly report for each batch of reformulated gasoline or RBOB which is included under paragraph (a)(1) of this section:

(i) The batch number;

(ii) The date of production;

(iii) The volume of the batch;

(iv) The grade of gasoline produced (i.e., premium, mid-grade, or regular);

(v) For any refiner or importer:

(A) Each designation of the gasoline, pursuant to §80.65; and

(B) The properties, pursuant to §§80.65 and 80.66;

(vi) For any importer, the PADD in which the import facility is located; and

(vii) For any oxygenate blender, the oxygen content.

(3) Information pertaining to gasoline produced or imported during 1994 shall be included in the first quarterly report in 1995.

(b) *Reports for gasoline or RBOB produced or imported under the simple model*—(1) *RVP averaging reports.* (i) Any refiner or importer that produced or imported any reformulated gasoline or RBOB under the simple model that was to meet RVP standards on average (''averaged reformulated gasoline'') shall submit to the Administrator, with the third quarterly report, a report for each refinery or importer for such averaged reformulated gasoline or RBOB produced or imported during the previous RVP averaging period. This information shall be reported separately for the following categories:

(A) Gasoline or RBOB which is designated as VOC-controlled intended for areas in VOC-Control Region 1; and

(B) Gasoline or RBOB which is designated as VOC-controlled intended for VOC-Control Region 2.

(ii) The following information shall be reported:

(A) The total volume of averaged reformulated gasoline or RBOB in gallons;

(B) The compliance total value for RVP; and

(C) The actual total value for RVP.

(2) *Sulfur, olefins and T90 averaging reports.* (i) Any refiner or importer that produced or imported any reformulated gasoline or RBOB under the simple model shall submit to the Administrator, with the fourth quarterly report, a report for such reformulated gasoline or RBOB produced or imported during the previous year:

(A) For each refinery or importer; or

(B) In the case of refiners who operate more than one refinery, for each grouping of refineries as designated by the refiner pursuant to § 80.41(h)(2)(iii).

(ii) The following information shall be reported:

(A) The total volume of reformulated gasoline or RBOB in gallons;

(B) The applicable sulfur content standard under § 80.41(h)(2)(i) in parts per million;

(C) The average sulfur content in parts per million;

(D) The difference between the applicable sulfur content standard under § 80.41(h)(2)(i) in parts per million and the average sulfur content under paragraph (b)(2)(ii)(C) of this section in parts per million, indicating whether the average is greater or lesser than the applicable standard;

(E) The applicable olefin content standard under § 80.41(h)(2)(i) in volume percent;

(F) The average olefin content in volume percent;

(G) The difference between the applicable olefin content standard under § 80.41(h)(2)(i) in volume percent and the average olefin content under paragraph (b)(2)(ii)(F) of this section in volume percent, indicating whether the average is greater or lesser than the applicable standard;

(H) The applicable T90 distillation point standard under § 80.41(h)(2)(i) in degrees Fahrenheit;

(I) The average T90 distillation point in degrees Fahrenheit; and

(J) The difference between the applicable T90 distillation point standard under § 80.41(h)(2)(i) in degrees Fahrenheit and the average T90 distillation point under paragraph (b)(2)(ii)(I) of this section in degrees Fahrenheit, indicating whether the average is greater or lesser than the applicable standard.

(c) *VOC emissions performance averaging reports.* (1) Any refiner or importer that produced or imported any reformulated gasoline or RBOB under the complex model that was to meet the VOC emissions performance standards on average (''averaged reformulated gasoline'') shall submit to the Administrator, with the third quarterly report, a report for each refinery or importer for such averaged reformulated gasoline produced or imported during the previous VOC averaging period. This information shall be reported separately for the following categories:

(i) Gasoline or RBOB which is designated as VOC-controlled intended for areas in VOC-Control Region 1; and

(ii) Gasoline or RBOB which is designated as VOC-controlled intended for VOC-Control Region 2.

(2) The following information shall be reported:

(i) The total volume of averaged reformulated gasoline or RBOB in gallons;

(ii) The compliance total value for VOC emissions performance; and

(iii) The actual total value for VOC emissions performance.

(d) *Benzene content averaging reports.* (1) Any refiner or importer that produced or imported any reformulated gasoline or RBOB that was to meet the benzene content standards on average (''averaged reformulated gasoline'') shall submit to the Administrator, with the fourth quarterly report, a report for each refinery or importer for such averaged reformulated gasoline that was produced or imported during the previous toxics averaging period.

(2) The following information shall be reported:

(i) The volume of averaged reformulated gasoline or RBOB in gallons;

(ii) The compliance total content of benzene;

(iii) The actual total content of benzene;

(iv) The number of benzene credits generated as a result of actual total benzene being less than compliance total benzene;

(v) The number of benzene credits required as a result of actual total benzene being greater than compliance total benzene;

(vi) The number of benzene credits transferred to another refinery or importer; and

(vii) The number of benzene credits obtained from another refinery or importer.

(e) *Toxics emissions performance averaging reports.* (1) Any refiner or importer that produced or imported any reformulated gasoline or RBOB that was to meet the toxics emissions performance standards on average (''averaged reformulated gasoline'') shall submit to the Administrator, with the fourth quarterly report, a report for each refinery or importer for such averaged reformulated gasoline that was produced or imported during the previous toxics averaging period.

(2) The following information shall be reported:

(i) The volume of averaged reformulated gasoline or RBOB in gallons;

(ii) The compliance value for toxics emissions performance; and

(iii) The actual value for toxics emissions performance.

(f) *Oxygen averaging reports.* (1) Any refiner, importer, or oxygenate blender that produced or imported any reformulated gasoline that was to meet the oxygen standards on average (''averaged reformulated gasoline'') shall submit to the Administrator, with the fourth quarterly report, a report for each refinery and oxygenate blending facility at which such averaged reformulated gasoline was produced and for all such averaged reformulated gasoline imported by each importer during the previous oxygen averaging period.

(2)(i) The following information shall be included in each report required by paragraph (f)(1) of this section:

(A) The total volume of averaged RBOB in gallons;

(B) The total volume of averaged reformulated gasoline in gallons;

(C) The compliance total content for oxygen;

(D) The actual total content for oxygen;

(E) The number of oxygen credits generated as a result of actual total oxygen being greater than compliance total oxygen;

(F) The number of oxygen credits required as a result of actual total oxygen being less than compliance total oxygen;

(G) The number of oxygen credits transferred to another refinery, importer, or oxygenate blending facility; and

(H) The number of oxygen credits obtained from another refinery, importer, or oxygenate blending facility.

(ii) The information required by paragraph (f)(2)(i) of this section shall be reported separately for the following categories:

(A) For gasoline subject to the simple model standards:

(*1*) Gasoline which is designated as VOC-controlled and oxygenated fuels program reformulated gasoline (OPRG);

(*2*) Gasoline which is designated as VOC-controlled and non-OPRG;

(*3*) Gasoline which is designated as non-VOC-controlled and OPRG; and

(*4*) Gasoline which is designated as non-VOC-controlled and non-OPRG; and

(B) For gasoline subject to the Phase I or Phase II complex model standards:

(*1*) Gasoline which is designated as OPRG; and

(*2*) Gasoline which is designated as non-OPRG.

(iii) The results of the compliance calculations required in § 80.67(f) shall also be included in each report required by paragraph (f)(1) of this section, for each of the following categories:

(A) All reformulated gasoline;

(B) Gasoline which is designated as non-OPRG; and

(C) For gasoline subject to the simple model standards, gasoline which is designated as VOC-controlled.

(g) *NO_X emissions performance averaging reports.* (1) Any refiner or importer that produced or imported any reformulated gasoline or RBOB that was to meet the NO_X emissions performance standard on average (''averaged reformulated gasoline'') shall submit to the Administrator, with the fourth quarterly report, a report for each refinery

or importer for such averaged reformulated gasoline that was produced or imported during the previous NO_X averaging period.

(2) The following information shall be reported:

(i) The volume of averaged reformulated gasoline or RBOB in gallons;

(ii) The compliance value for NO_X emissions performance; and

(iii) The actual value for NO_X emissions performance.

(3) The information required by paragraph (g)(2) of this section shall be reported separately for the following categories:

(i) Gasoline and RBOB which is designated as VOC-controlled; and

(ii) Gasoline and RBOB which is not designated as VOC-controlled.

(h) *Credit transfer reports.* (1) As an additional part of the fourth quarterly report required by this section, any refiner, importer, and oxygenate blender shall, for each refinery, importer, or oxygenate blending facility, supply the following information for any oxygen or benzene credits that are transferred from or to another refinery, importer, or oxygenate blending facility:

(i) The names, EPA-assigned registration numbers and facility identification numbers of the transferor and transferee of the credits;

(ii) The number(s) and type(s) of credits that were transferred; and

(iii) The date(s) of transaction(s).

(2) For purposes of this paragraph (h), oxygen credit transfers shall be reported separately for each of the following oxygen credit types:

(i) For gasoline subject to the simple model standards:

(A) VOC controlled, oxygenated fuels program reformulated gasoline (OPRG) oxygen credits;

(B) VOC controlled, non-OPRG oxygen credits;

(C) Non-VOC controlled, OPRG oxygen credits; and

(D) Non-VOC controlled, non-OPRG oxygen credits; and

(ii) For gasoline subject to the Phase I or Phase II complex model standards:

(A) OPRG oxygen credits; and

(B) Non-OPRG oxygen credits.

(i) *Covered areas of gasoline use report.* Any refiner or oxygenate blender that produced or imported any reformulated gasoline that was to meet any reformulated gasoline standard on average (''averaged reformulated gasoline'') shall, for each refinery and oxygenate blending facility at which such averaged reformulated gasoline was produced submit to the Administrator, with the fourth quarterly report, a report that contains the identity of each covered area that was supplied with any averaged reformulated gasoline produced at each refinery or blended by each oxygenate blender during the previous year.

(j) *Additional reporting requirements for certain importers.* In the case of any importer to whom different standards apply for gasoline imported at different facilities by operation of § 80.41(q)(2), such importer shall submit separate reports for gasoline imported into facilities subject to different standards.

(k) *Reporting requirements for early use of the complex model.* Any refiner for any refinery, or any importer, that elects to be subject to complex model standards under § 80.41(i)(1) shall report such election in writing to the Administrator no later than sixty days prior to the beginning of the calendar year during which such standards would apply. This report shall include the refinery's or importer's baseline values for VOC, NO_X, and toxics emissions performance, in milligrams per mile.

(l) *Reports for per-gallon compliance gasoline.* In the case of reformulated gasoline or RBOB for which compliance with each of the standards set forth in § 80.41 is achieved on a per-gallon basis, the refiner, importer, or oxygenate blender shall submit to the Administrator, by the last day of February of each year beginning in 1996, a report of the volume of each designated reformulated gasoline or RBOB produced or imported during the previous calendar year for which compliance is achieved on a per-gallon basis, and a statement that each gallon of this reformulated gasoline or RBOB met the applicable standards.

(m) *Reports of compliance audits.* Any refiner, importer, and oxygenate blender shall cause to be submitted to the Administrator, by May 31 of each year, the report of the compliance audit required by § 80.65(h).

(n) *Report submission*. The reports required by this section shall be:

(1) Submitted on forms and following procedures specified by the Administrator; and

(2) Signed and certified as correct by the owner or a responsible corporate officer of the refiner, importer, or oxygenate blender.

[59 FR 7813, Feb. 16, 1994, as amended at 59 FR 36964, July 20, 1994; 60 FR 65574, Dec. 20, 1995]

§80.76 Registration of refiners, importers or oxygenate blenders.

(a) Registration with the Administrator of EPA is required for any refiner and importer, and any oxygenate blender that produces any reformulated gasoline.

(b) Any person required to register shall do so by November 1, 1994, or not later than three months in advance of the first date that such person will produce or import reformulated gasoline or RBOB, or conventional gasoline or applicable blendstocks, whichever is later.

(c) Registration shall be on forms prescribed by the Administrator, and shall include the following information:

(1) The name, business address, contact name, and telephone number of the refiner, importer, or oxygenate blender;

(2) For each separate refinery and oxygenate blending facility, the facility name, physical location, contact name, telephone number, and type of facility; and

(3) For each separate refinery and oxygenate blending facility, and for each importer's operations in a single PADD:

(i) Whether records are kept on-site or off-site of the refinery or oxygenate blending facility, or in the case of importers, the registered address;

(ii) If records are kept off-site, the primary off-site storage facility name, physical location, contact name, and telephone number; and

(iii) The name, address, contact name and telephone number of the independent laboratory used to meet the independent analysis requirements of §80.65(f).

(d) EPA will supply a registration number to each refiner, importer, and oxygenate blender, and a facility registration number for each refinery and oxygenate blending facility that is identified, which shall be used in all reports to the Administrator.

(e)(1) Any refiner, importer, or oxygenate blender shall submit updated registration information to the Administrator within thirty days of any occasion when the registration information previously supplied becomes incomplete or inaccurate; except that

(2) EPA must be notified in writing of any change in designated independent laboratory at least thirty days in advance of such change.

[59 FR 7813, Feb. 16, 1994, as amended at 59 FR 36965, July 20, 1994]

§80.77 Product transfer documentation.

On each occasion when any person transfers custody or title to any reformulated gasoline or RBOB, other than when gasoline is sold or dispensed for use in motor vehicles at a retail outlet or wholesale purchaser-consumer facility, the transferor shall provide to the transferee documents which include the following information:

(a) The name and address of the transferor;

(b) The name and address of the transferee;

(c) The volume of gasoline which is being transferred;

(d) The location of the gasoline at the time of the transfer;

(e) The date of the transfer;

(f) The proper identification of the gasoline as conventional or reformulated;

(g) In the case of reformulated gasoline or RBOB:

(1) The proper identification as:

(i)(A) VOC-controlled for VOC-Control Region 1; or VOC-controlled for VOC-Control Region 2; or Not VOC-controlled; or

(B) In the case of gasoline or RBOB that is VOC-controlled for VOC-Control Region 1, the gasoline may be identified as suitable for use either in VOC-Control Region 1 or VOC-Control Region 2;

(ii) Oxygenated fuels program reformulated gasoline; or Not oxygenated

fuels program reformulated gasoline; and

(iii) Prior to January 1, 1998, certified under the simple model standards or certified under the complex model standards; and

(2) The minimum and/or maximum standards with which the gasoline or RBOB conforms for:

(i) Benzene content;

(ii) Except for RBOB, oxygen content;

(iii) In the case of VOC-controlled gasoline subject to the simple model standards, RVP;

(iv) In the case of gasoline subject to the complex model standards:

(A) Prior to January 1, 1998, the NOx emissions performance minimum, and for VOC-controlled gasoline the VOC emissions performance minimum, in milligrams per mile; and

(B) Beginning on January 1, 1998, the NOx emissions performance minimum, and for VOC-controlled gasoline the VOC emissions performance minimum; and

(3) Identification of VOC-controlled reformulated gasoline or RBOB as gasoline or RBOB which contains ethanol, or which does not contain any ethanol.

(h) Prior to January 1, 1998, in the case of reformulated gasoline or RBOB subject to the complex model standards:

(1) The name and EPA registration number of the refinery at which the gasoline was produced, or importer that imported the gasoline; and

(2) Instructions that the gasoline or RBOB may not be combined with any other gasoline or RBOB that was produced at any other refinery or was imported by any other importer;

(i) In the case of reformulated gasoline blendstock for which oxygenate blending is intended:

(1) Identification of the product as RBOB and not reformulated gasoline;

(2) The designation of the RBOB as suitable for blending with:

(A) Any-oxygenate;

(B) Ether-only; or

(C) Other specified oxygenate type(s) and amount(s); and

(3) The oxygenate type(s) and amount(s) which the RBOB requires in order to meet the properties claimed by the refiner or importer of the RBOB;

(4) Instructions that the RBOB may not be combined with any other RBOB except other RBOB having the same requirements for oxygenate type(s) and amount(s), or, prior to blending, with reformulated gasoline; and

(j) In the case of transferrers or transferees who are refiners, importers or oxygenate blenders, the EPA-assigned registration number of those persons.

[59 FR 7813, Feb. 16, 1994, as amended at 59 FR 36965, July 20, 1994]

§ 80.78 Controls and prohibitions on reformulated gasoline.

(a) *Prohibited activities.* (1) No person may manufacture and sell or distribute, offer for sale or distribution, dispense, supply, offer for supply, store, transport, or cause the transportation of any gasoline represented as reformulated and intended for sale or use in any covered area:

(i) Unless each gallon of such gasoline meets the applicable benzene maximum standard specified in § 80.41;

(ii) Unless each gallon of such gasoline meets the applicable oxygen content:

(A) Minimum standard specified in § 80.41; and

(B) In the case of gasoline subject to simple model standards, maximum standard specified in § 80.41;

(iii) Unless each gallon is properly designated as oxygenated fuels program reformulated gasoline, within any oxygenated gasoline program control areas during the oxygenated gasoline control period;

(iv) Unless the product transfer documentation for such gasoline complies with the requirements in § 80.77; and

(v) During the period May 1 through September 15 for all persons except retailers and wholesale purchaser-consumers, and during the period June 1 through September 15 for all persons including retailers and wholesale purchaser-consumers:

(A) Unless each gallon of such gasoline is VOC-controlled for the proper VOC Control Region, except that gasoline designated for VOC-Control Region 1 may be used in VOC-Control Region 2;

(B) Unless each gallon of such gasoline that is subject to simple model standards has an RVP which is less

than or equal to the applicable RVP maximum specified in §80.41;

(C) Unless each gallon of such gasoline that is subject to complex model standards has a VOC and NOx emissions reduction percentage which is greater than or equal to the applicable minimum specified in §80.41.

(2) No refiner or importer may produce or import any gasoline represented as reformulated or RBOB, and intended for sale or use in any covered area:

(i) Unless such gasoline meets the definition of reformulated gasoline or RBOB; and

(ii) Unless the properties of such gasoline or RBOB correspond to the product transfer documents.

(3) No person may manufacture and sell or distribute, or offer for sale or distribution, dispense, supply, or offer for supply, store, transport or cause the transportation of gasoline represented as conventional which does not contain at least the minimum concentration of the conventional gasoline marker specified in §80.82.

(4) Gasoline shall be presumed to be intended for sale or use in a covered area unless:

(i) Product transfer documentation as described in §80.77 accompanying such gasoline clearly indicates the gasoline is intended for sale and use only outside any covered area; or

(ii) The gasoline is contained in the storage tank of a retailer or wholesale purchaser-consumer outside any covered area.

(5) No person may combine any reformulated gasoline with any non-oxygenate blendstock except:

(i) A person that meets each requirement specified for a refiner under this subpart; and

(ii) The blendstock that is added to reformulated gasoline meets all reformulated gasoline standards without regard to the properties of the reformulated gasoline to which the blendstock is added.

(6) No person may add any oxygenate to reformulated gasoline, except that oxygenate may be added to reformulated gasoline that is designated as OPRG provided that such gasoline is used in an oxygenated fuels program control area during an oxygenated fuels control period.

(7) No person may combine any reformulated gasoline blendstock for oxygenate blending with any other gasoline, blendstock, or oxygenate except:

(i) Oxygenate of the type and amount (or within the range of amounts) specified by the refiner or importer at the time the RBOB was produced or imported; or

(ii) Other RBOB for which the same oxygenate type and amount (or range of amounts) was specified by the refiner or importer.

(8) No person may combine any VOC-controlled reformulated gasoline that is produced using ethanol with any VOC-controlled reformulated gasoline that is produced using any other oxygenate during the period January 1 through September 15.

(9) Prior to January 1, 1998:

(i) No person may combine any reformulated gasoline or RBOB that is subject to the simple model standards with any reformulated gasoline or RBOB that is subject to the complex model standards, except that such gasolines may be combined at a retail outlet or wholesale purchaser-consumer facility;

(ii) No person may combine any reformulated gasoline subject to the complex model standards that is produced at any refinery or is imported by any importer with any other reformulated gasoline that is produced at a different refinery or is imported by a different importer, unless the other refinery or importer has an identical baseline for meeting complex model standards during this period; and

(iii) No person may combine any RBOB subject to the complex model standards that is produced at any refinery or is imported by any importer with any RBOB that is produced at a different refinery or is imported by a different importer, unless the other refinery or importer has an identical baseline for meeting complex model standards during this period.

(10) No person may combine any reformulated gasoline with any conventional gasoline and sell the resulting mixture as reformulated gasoline.

(b) *Liability*. Liability for violations of paragraph (a) of this section shall be

determined according to the provisions of § 80.79.

(c) *Determination of compliance.* Compliance with the standards listed in paragraph (a) of this section shall be determined by use of one of the testing methodologies specified in § 80.46, except that where test results using the testing methodologies specified in § 80.46 are not available or where such test results are available but are in question, EPA may establish noncompliance with standards using any information, including the results of testing using methods that are not included in § 80.46.

(d) *Dates controls and prohibitions begin.* The controls and prohibitions specified in paragraph (a) of this section apply at any location other than retail outlets and wholesale purchaser-consumer facilities on or after December 1, 1994, at any location on or after January 1, 1995.

[59 FR 7813, Feb. 16, 1994, as amended at 59 FR 36965, July 20, 1994]

§ 80.79 Liability for violations of the prohibited activities.

(a) *Persons liable.* Where the gasoline contained in any storage tank at any facility owned, leased, operated, controlled or supervised by any refiner, importer, oxygenate blender, carrier, distributor, reseller, retailer, or wholesale purchaser-consumer is found in violation of the prohibitions described in § 80.78(a), the following persons shall be deemed in violation:

(1) Each refiner, importer, oxygenate blender, carrier, distributor, reseller, retailer, or wholesale purchaser-consumer who owns, leases, operates, controls or supervises the facility where the violation is found;

(2) Each refiner or importer whose corporate, trade, or brand name, or whose marketing subsidiary's corporate, trade, or brand name, appears at the facility where the violation is found;

(3) Each refiner, importer, oxygenate blender, distributor, and reseller who manufactured, imported, sold, offered for sale, dispensed, supplied, offered for supply, stored, transported, or caused the transportation of any gasoline which is in the storage tank containing gasoline found to be in violation; and

(4) Each carrier who dispensed, supplied, stored, or transported any gasoline which is in the storage tank containing gasoline found to be in violation, provided that EPA demonstrates, by reasonably specific showings by direct or circumstantial evidence, that the carrier caused the violation.

(b) *Defenses for prohibited activities.* (1) In any case in which a refiner, importer, oxygenate blender, carrier, distributor, reseller, retailer, or wholesale purchaser-consumer would be in violation under paragraph (a) of this section, it shall be deemed not in violation if it can demonstrate:

(i) That the violation was not caused by the regulated party or its employee or agent;

(ii) That product transfer documents account for all of the gasoline in the storage tank found in violation and indicate that the gasoline met relevant requirements; and

(iii)(A) That it has conducted a quality assurance sampling and testing program, as described in paragraph (c) of this section; except that

(B) A carrier may rely on the quality assurance program carried out by another party, including the party that owns the gasoline in question, provided that the quality assurance program is carried out properly.

(2)(i) Where a violation is found at a facility which is operating under the corporate, trade or brand name of a refiner, that refiner must show, in addition to the defense elements required by paragraph (b)(1) of this section, that the violation was caused by:

(A) An act in violation of law (other than the Act or this part), or an act of sabotage or vandalism;

(B) The action of any reseller, distributor, oxygenate blender, carrier, or a retailer or wholesale purchaser-consumer supplied by any of these persons, in violation of a contractual undertaking imposed by the refiner designed to prevent such action, and despite periodic sampling and testing by the refiner to ensure compliance with such contractual obligation; or

(C) The action of any carrier or other distributor not subject to a contract

with the refiner but engaged by the refiner for transportation of gasoline, despite specification or inspection of procedures and equipment by the refiner which are reasonably calculated to prevent such action.

(ii) In this paragraph (b), to show that the violation ''was caused'' by any of the specified actions the party must demonstrate by reasonably specific showings, by direct or circumstantial evidence, that the violation was caused or must have been caused by another.

(c) *Quality assurance program.* In order to demonstrate an acceptable quality assurance program for reformulated gasoline at all points in the gasoline distribution network, other than at retail outlets and wholesale purchaser-consumer facilities, a party must present evidence:

(1) Of a periodic sampling and testing program to determine if the applicable maximum and/or minimum standards for oxygen, benzene, RVP, or VOC or NO_X emission performance are met; and

(2) That on each occasion when gasoline is found in noncompliance with one of the requirements referred to in paragraph (c)(1) of this section:

(i) The party immediately ceases selling, offering for sale, dispensing, supplying, offering for supply, storing, transporting, or causing the transportation of the violating product; and

(ii) The party promptly remedies the violation (such as by removing the violating product or adding more complying product until the applicable standards are achieved).

§80.80 Penalties.

(a) Any person that violates any requirement or prohibition of subpart D, E, or F of this part shall be liable to the United States for a civil penalty of not more than the sum of $25,000 for every day of each such violation and the amount of economic benefit or savings resulting from each such violation.

(b) Any violation of a standard for average compliance during any averaging period, or for per-gallon compliance for any batch of gasoline, shall constitute a separate violation for each and every standard that is violated.

(c) Any violation of any standard based upon a multi-day averaging period shall constitute a separate day of violation for each and every day in the averaging period. Any violation of any credit creation or credit transfer requirement shall constitute a separate day of violation for each and every day in the averaging period.

(d)(1)(i) Any violation of any per- gallon standard or of any per-gallon minimum or per-gallon maximum, other than the standards specified in paragraph (e) of this section, shall constitute a separate day of violation for each and every day such gasoline giving rise to such violations remains any place in the gasoline distribution system, beginning on the day that the gasoline that violates such per-gallon standard is produced or imported and distributed and/or offered for sale, and ending on the last day that any such gasoline is offered for sale or is dispensed to any ultimate consumer for use in any motor vehicle; unless

(ii) The violation is corrected by altering the properties and characteristics of the gasoline giving rise to the violations and any mixture of gasolines that contains any of the gasoline giving rise to the violations such that the said gasoline or mixture of gasolines has the properties and characteristics that would have existed if the gasoline giving rise to the violations had been produced or imported in compliance with all per-gallon standards.

(2) For the purposes of this paragraph (d), the length of time the gasoline in question remained in the gasoline distribution system shall be deemed to be twenty-five days; unless the respective party or EPA demonstrates by reasonably specific showings, by direct or circumstantial evidence, that the gasoline giving rise to the violations remained any place in the gasoline distribution system for fewer than or more than twenty-five days.

(e)(1) Any reformulated gasoline that is produced or imported and offered for sale and for which the requirements to determine the properties and characteristics under §80.65(f) is not met, or any conventional gasoline for which the refiner or importer does not sample and test to determine the relevant properties, shall be deemed:

(i)(A) Except as provided in paragraph (e)(1)(i)(B) of this section to have the following properties:

Sulfur content—970 ppm
Benzene content—5 vol %
RVP (summer)—11 psi
50% distillation—250 °F
90% distillation—375 °F
Oxygen content—0 wt %
Aromatics content—50 vol %
Olefins content—26 vol %

(B) To have the following properties in paragraph (e)(1)(i)(A) of this section unless the respective party or EPA demonstrates by reasonably specific showings, by direct or circumstantial evidence, different properties for the gasoline giving rise to the violations; and

(ii) In the case of reformulated gasoline, to have been designated as meeting all applicable standards on a per-gallon basis.

(2) For the purposes of paragraph (e)(1) of this section, any refiner or importer that fails to meet the independent analysis requirements of § 80.65(f) may not use the results of sampling and testing that is carried out by that refiner or importer as direct or circumstantial evidence of the properties of the gasoline giving rise to the violations, unless this failure was not caused by the refiner or importer.

(f) Any violation of any affirmative requirement or prohibition not included in paragraph (c) or (d) of this section shall constitute a separate day of violation for each and every day such affirmative requirement is not properly accomplished, and/or for each and every day the prohibited activity continues. For those violations that may be ongoing under subparts D, E, and F of this part, each and every day the prohibited activity continues shall constitute a separate day of violation.

§ 80.81 Enforcement exemptions for California gasoline.

(a)(1) The requirements of subparts D, E, and F of this part are modified in accordance with the provisions contained in this section in the case of California gasoline.

(2) For the purposes of this section, ''California gasoline'' means any gasoline that is sold, intended for sale, or made available for sale as a motor vehicle fuel in the State of California and that:

(i) Is manufactured within the State of California;

(ii) Is imported into the State of California from outside the United States; or

(iii) Is imported into the State of California from inside the United States and that is manufactured at a refinery that does not produce reformulated gasoline for sale in any covered area outside the State of California.

(b)(1) Any refiner, importer, or oxygenate blender of gasoline that is sold, intended for sale, or made available for sale as a motor fuel in the State of California is, with regard to such gasoline, exempt from the compliance survey provisions contained in § 80.68.

(2) Any refiner, importer, or oxygenate blender of California gasoline is, with regard to such gasoline, exempt from the independent analysis requirements contained in § 80.65(f).

(3) Any refiner, importer, or oxygenate blender of California gasoline that elects to meet any benzene content, oxygen content, or toxics emission reduction standard specified in § 80.41 on average for any averaging period specified in § 80.67 that is in part before March 1, 1996, and in part subsequent to such date, shall, with regard to such gasoline that is produced or imported prior to such date, demonstrate compliance with each of the standards specified in § 80.41 for each of the following averaging periods in lieu of those specified in § 80.67:

(i) January 1 through December 31, 1995; and

(ii) March 1, 1995, through February 29, 1996.

(4) The compliance demonstration required by paragraph (b)(3)(ii) of this section shall be submitted no later than May 31, 1996, along with the report for the first quarter of 1996 required to be submitted under § 80.75(a)(1)(i).

(c) Any refiner, importer, or oxygenate blender of California gasoline that is manufactured or imported subsequent to March 1, 1996, and that meets the requirements of the California

Phase 2 reformulated gasoline regulations, as set forth in Title 13, California Code of Regulations, sections 2260 et seq., is, with regard to such gasoline, exempt from the following requirements (in addition to the requirements specified in paragraph (b) of this section):

(1) The parameter value reconciliation requirements contained in § 80.65(e)(2);

(2) The designation of gasoline requirements contained in § 80.65(d), except in the case of RBOB that is designated as ''any renewable oxygenate,'' ''non-VOC controlled renewable ether only'', or ''renewable ether only'';

(3) The reformulated gasoline and RBOB compliance requirements contained in § 80.65(c);

(4) The marking of conventional gasoline requirements contained in §§ 80.65(g) and 80.82;

(5) The annual compliance audit requirements contained in § 80.65(h), except where such audits are required with regard to the renewable oxygenate requirements contained in § 80.83;

(6) The downstream oxygenate blending requirements contained in § 80.69, except where such requirements apply to the renewable oxygenate requirements contained in § 80.83;

(7) The record keeping requirements contained in §§ 80.74 and 80.104, except that records required to be maintained under Title 13, California Code of Regulations, section 2270, shall be maintained for a period of five years from the date of creation and shall be delivered to the Administrator or to the Administrator's authorized representative upon request;

(8) The reporting requirements contained in §§ 80.75 and 80.105;

(9) The product transfer documentation requirements contained in § 80.77; and

(10) The compliance attest engagement requirements contained in subpart F of this part, except where such requirements apply to the renewable oxygenate requirements contained in § 80.83.

(d) Any refiner, importer, or oxygenate blender that produces or imports gasoline that is sold, intended for sale, or made available for sale as a motor vehicle fuel in the State of California subsequent to March 1, 1996, shall demonstrate compliance with the standards specified in §§ 80.41 and 80.90 by excluding the volume and properties of such gasoline from all conventional gasoline and reformulated gasoline that it produces or imports that is not sold, intended for sale, or made available for sale as a motor vehicle fuel in the State of California subsequent to such date. The exemption provided in this section does not exempt any refiner or importer from demonstrating compliance with such standards for all gasoline that it produces or imports.

(e)(1) The exemption provisions contained in paragraphs (b)(2), (b)(3), and (c) of this section shall not apply under the circumstances set forth in paragraphs (e)(2) and (e)(3) of this section.

(2)(i) Such exemption provisions shall not apply to any refiner, importer, or oxygenate blender of California gasoline if any gasoline formulation that it produces or imports is certified under Title 13, California Code of Regulations, section 2265 or section 2266, unless such refiner, importer, or oxygenate blender within 30 days of the issuance of such certification:

(A) Notifies the Administrator of such certification;

(B) Submits to the Administrator copies of the applicable certification order issued by the State of California and of the application for certification submitted by the regulated party to the State of California; and

(C) Submits to the Administrator a written demonstration that the certified gasoline formulation meets each of the complex model per-gallon standards specified in § 80.41(c).

(ii) If the Administrator determines that the written demonstration submitted under paragraph (e)(2)(i)(C) of this section does not demonstrate that the certified gasoline formulation meets each of the complex model per-gallon standards specified in § 80.41(c), the Administrator shall provide notice to the party (by first class mail) of such determination and of the date on which the exemption provisions specified in paragraph (e)(1) of this section shall no longer be applicable, which date shall be no earlier than 90 days after the date of the Administrator's notification.

(3)(i) Such exemption provisions shall not apply to any refiner, importer, or oxygenate blender of California gasoline who has been assessed a civil, criminal or administrative penalty for a violation of subpart D, E or F of this part or for a violation of the California Phase 2 reformulated gasoline regulations set forth in Title 13, California Code of Regulations, sections 2260 et seq., effective 90 days after the date of final agency or district court adjudication of such penalty assessment.

(ii) Any refiner, importer, or oxygenate blender subject to the provisions of paragraph (e)(3)(i) of this section may submit a petition to the Administrator for relief, in whole or in part, from the applicability of such provisions, for good cause. Good cause may include a showing that the violation for which a penalty was assessed was not a substantial violation of the federal or California reformulated gasoline regulations.

(f) In the case of any gasoline that is sold, intended for sale, or made available for sale as a motor vehicle fuel in the State of California subsequent to March 1, 1996, any person that manufactures, sells, offers for sale, dispenses, supplies, offers for supply, stores, transports, or causes the transportation of such gasoline is, with regard to such gasoline, exempt from the following prohibited activities provisions:

(1) The oxygenated fuels provisions contained in § 80.78(a)(1)(iii);

(2) The product transfer provisions contained in § 80.78(a)(1)(iv);

(3) The oxygenate blending provisions contained in § 80.78(a)(7); and

(4) The segregation of simple and complex model certified gasoline provision contained in § 80.78(a)(9).

(g)(1) Any refiner that operates a refinery located outside the State of California at which California gasoline (as defined in paragraph (a)(2)(iii) of this section) is produced shall, with regard to such gasoline, provide to any person to whom custody or title of such gasoline is transferred, and each transferee shall provide to any subsequent transferee, documents which include the following information:

(i) The name and address of the transferor;

(ii) The name and address of the transferee;

(iii) The volume of gasoline which is being transferred;

(iv) The location of the gasoline at the time of the transfer;

(v) The date and time of the transfer;

(vi) The identification of the gasoline as California gasoline; and

(vii) In the case of transferrors and transferrees who are refiners, importers or oxygenate blenders, the EPA- assigned registration number of such persons.

(2) Each refiner and transferee of such gasoline shall maintain copies of the product transfer documents required to be provided by paragraph (g)(1) of this section for a period of five years from the date of creation and shall deliver such documents to the Administrator or to the Administrator's authorized representative upon request.

(h) For purposes of the batch sampling and analysis requirements contained in § 80.65(e)(1), any refiner, importer or oxygenate blender of California gasoline may, with regard to such gasoline, use a sampling and/or analysis methodology prescribed in Title 13, California Code of Regulations, sections 2260 *et seq.*, in lieu of any applicable methodology specified in § 80.46.

(i) The exemption provisions contained in this section shall not be applicable after December 31, 1999.

[59 FR 7813, Feb. 16, 1994, as amended at 59 FR 36965, July 20, 1994; 59 FR 39289, Aug. 2, 1994; 59 FR 60715, Nov. 28, 1994]

EFFECTIVE DATE NOTE: At 59 FR 39289, Aug. 2, 1994, § 80.81 was amended by revising paragraphs (c)(2), (c)(5), (c)(6), and (c)(10) effective September 1, 1994. At 59 FR 60715, Nov. 28, 1994, the amendment was stayed effective September 13, 1994.

§ 80.82 Conventional gasoline marker. [Reserved]

§ 80.83 Renewable oxygenate requirements.

(a) *Definition of renewable oxygenate.* For purposes of subparts D and F of this part, renewable oxygenate is defined as provided in this paragraph (a).

(1) In the case of oxygenate added to reformulated gasoline or RBOB that is not designated as VOC-controlled or

that is not subject to the additional requirements associated with an extended non-commingling season pursuant to § 80.83(i), renewable oxygenate shall be:

(i) An oxygenate that is derived from non-fossil fuel feedstocks; or

(ii) An ether that is produced using an oxygenate that is derived from non-fossil fuel feedstocks.

(2) In the case of oxygenate added to reformulated gasoline or RBOB that is designated as VOC-controlled or that is subject to the additional requirements associated with an extended non-commingling season pursuant to § 80.83(i), renewable oxygenate shall be an ether that meets the requirements of paragraph (a)(1)(ii) or (a)(3) of this section.

(3) An oxygenate other than those ethers specified in paragraphs (a)(1) or (a)(2) of this section may be considered a renewable oxygenate if the Administrator approves a petition to that effect. The Administrator may approve such a petition if it is demonstrated to the satisfaction of the Administrator that the oxygenate does not cause volatility increases in gasoline that are non-linear in nature (i.e., a non-linear vapor pressure blending curve). The Administrator may approve a petition subject to any appropriate conditions or limitations.

(4)(i) Oxygenate shall be renewable only if the refiner, importer, or oxygenate blender who uses the oxygenate is able to establish in the form of documentation that the oxygenate was produced from a non-fossil fuel feedstock.

(ii)(A) Any person who produces renewable oxygenate, as defined in paragraph (a)(1) of this section, or who stores, transports, transfers, or sells such renewable oxygenate, and where such renewable oxygenate is intended to be used in the production of gasoline, shall maintain documents that state the renewable source of the oxygenate, and shall supply to any transferee of the oxygenate documents which state the oxygenate is from a renewable source.

(B) Any person who imports oxygenate that is represented by the importer to be renewable oxygenate, as defined in paragraph (a) of this section, shall maintain documents, obtained from the person who produced the oxygenate, that include a certification signed by the owner or chief executive officer of the company that produced the oxygenate that states:

(*1*) The nature of the feedstock for the oxygenate; and

(*2*) A description of the manner in which the oxygenate meets the renewable definition under paragraph (a) of this section.

(iii) No person may represent any oxygenate as renewable unless the oxygenate meets the renewable definition under paragraph (a) of this section.

(5) For purposes of this section, an oxygenate shall be considered to be derived from non-fossil fuel feedstocks only if the oxygenate is:

(i) Derived from a source other than petroleum, coal, natural gas, or peat; or

(ii) Derived from a product:

(A) That was produced using petroleum, coal, natural gas, or peat through a substantial transformation of the fossil fuel;

(B) When the product was initially produced, it was not commonly used to generate energy (e.g. automobile tires); and

(C) The product was sold or transferred for a use other than energy generation, and was later treated as a waste product.

(b) *Renewable oxygenate standard.* (1) The reformulated gasoline and reformulated gasoline produced using RBOB that is produced by any refiner at each refinery, or is imported by any importer, shall contain a volume of renewable oxygenate such that the reformulated gasoline and reformulated gasoline produced using RBOB, on average, has an oxygen content from such renewable oxygenate that is equal to or greater than 0.30 wt% for the period of December 1, 1994 through December 31, 1995, and 0.60 wt% beginning on January 1, 1996.

(2) The averaging period for the renewable oxygenate standard specified in paragraph (b)(1) of this section shall be:

(i) Each calendar year; except that

(ii)Any reformulated gasoline and RBOB that is produced or imported prior to January 1, 1995 shall be averaged with reformulated gasoline and

RBOB produced or imported during 1995.

(3)(i) The oxygenate used to meet the standard under paragraph (b)(1) of this section may also be used to meet any oxygen standard under § 80.41; except that

(ii) The renewable oxygenate added by a downstream oxygenate blender shall not be used by any refiner or importer to meet the oxygen standard under § 80.41, except through the transfer of oxygen credits.

(c) *Downstream oxygenate blending using renewable oxygenate.* (1) In the case of any refiner that produces RBOB, or any importer that imports RBOB, the oxygenate that is blended with the RBOB may be included with the refiner's or importer's compliance calculations under paragraph (d) of this section only if:

(i) The oxygenate meets the applicable renewable oxygenate definition under paragraph (a) of this section; and

(ii) The refiner or importer meets the downstream oxygenate blending oversight requirements specified in §§ 80.69(a)(6) and (7); or

(iii)(A) In the case of RBOB designated for ''any renewable oxygenate'' the refiner or importer assumes that ethanol will be blended with the RBOB;

(B) In the case of RBOB designated for ''renewable ether only'' or ''non-VOC controlled renewable ether only '', the refiner or importer assumes that ETBE will be blended with the RBOB; and

(C) In the case of ''any renewable oxygenate,'' ''non-VOC controlled renewable ether only'' and ''renewable ether only RBOB,'' the refiner or importer assumes that the volume of oxygenate added will be such that the resulting reformulated gasoline will have an oxygen content of 2.0 wt%.

(2)(i) No person may combine any oxygenate with RBOB designated as ''any renewable oxygenate'' unless the oxygenate meets the criteria specified in paragraph (a) of this section.

(ii) No person may combine any oxygenate with RBOB designated as ''renewable ether only'' or ''non-VOC controlled renewable ether only'' unless the oxygenate meets the criteria specified in paragraph (a) of this section.

(d) *Compliance calculation.* (1) Any refiner for each of its refineries, and any importer shall, for each averaging period, determine compliance with the renewable oxygenate standard by calculating:

(i) Prior to January 1, 1996, renewable oxygen compliance total using the following formula:

$$CT_{ro} = \left(\sum_{i=1}^{n} V_i \right) * 0.30$$

(ii) Beginning on January 1, 1996, the renewable oxygen compliance total using the following formula:

$$CT_{ro} = \left(\sum_{i=1}^{n} V_i \right) * 0.60$$

where

CT_{ro}=the compliance total for renewable oxygen

V_i=the volume of reformulated gasoline or RBOB batch i

n=the number of batches of reformulated gasoline and RBOB produced or imported during the averaging period

(iii) The renewable oxygen actual total using the following formula:

$$AT_{ro} = \sum_{i=1}^{n} \left(V_i * RO_i \right)$$

where

AT_{ro}=the actual total for renewable oxygen

V_i=the volume of gasoline or RBOB batch i

RO_i=the oxygen content, in wt%, in the form of renewable oxygenate of gasoline or RBOB batch i

n=the number of batches of gasoline or RBOB produced or imported during the averaging period

(iv) Compare the renewable oxygen actual total with the renewable oxygen compliance total.

(2)(i) The actual total must be equal to or greater than the compliance totals to achieve compliance, subject to the credit transfer provisions of paragraph (e) of this section.

(ii) If the renewable oxygen actual total is less than the renewable oxygen

compliance total, renewable oxygen credits must be obtained from another refinery or importer in order to achieve compliance.

(iii) The total number of renewable oxygen credits required to achieve compliance is calculated by subtracting the renewable oxygen actual total from the renewable oxygen compliance total.

(iv) If the renewable oxygen actual total is greater than the renewable oxygen compliance total, renewable oxygen credits are generated.

(v) The total number of renewable oxygen credits which may be traded to a refiner for a refinery, or to another importer, is calculated by subtracting the renewable oxygen compliance total from the renewable oxygen actual total.

(e) *Credit transfers.* Compliance with the renewable oxygenate standard specified in paragraph (b)(1) of this section may be achieved through the transfer of renewable oxygen credits, provided that the credits meet the criteria specified in §§80.67(h)(1) (i) through (iv) and §§80.67(h) (2) and (3).

(f) *Recordkeeping.* Any refiner or importer, or any oxygenate blender who blends oxygenate with any RBOB designated as *''any renewable oxygenate,''* ''non VOC controlled renewable ether only'' or ''renewable ether only'' shall for a period of five years maintain the records specified in this paragraph (f) in a manner consistent with the requirements under §80.74, and deliver such records to the Administrator upon request. The records shall contain the following information:

(1)(i) Documents demonstrating the renewable nature and source of the oxygenate used, consistent with the requirements of paragraph (a)(3) of this section;

(ii) The volume, type, and purity of any renewable oxygenate used; and

(iii) Product transfer documentation for all renewable oxygenate, reformulated gasoline, or RBOB for which the party is the transferor or transferee.

(2) The requirements of this paragraph (f) shall apply in addition to the recordkeeping requirements specified in §80.74(e).

(g) *Reporting requirements.* (1) Any refiner for each refinery, or any importer, shall for each batch of reformulated gasoline and RBOB include in the quarterly reports for reformulated gasoline required by §80.75(a) the total weight percent oxygen and the weight percent oxygen attributable to renewable oxygenate contained in the gasoline, or contained in the RBOB subsequent to oxygenate blending if allowed under paragraph (c) of this section.

(2) Any refiner for each refinery, or any importer, shall submit to the Administrator, with the fourth quarterly report required by §80.75(a), a report for all reformulated gasoline and RBOB that was produced or imported during the previous calendar year averaging period, that includes the following information:

(i) The total volume of reformulated gasoline and RBOB;

(ii) The compliance total for renewable oxygen;

(iii) The actual total for renewable oxygen;

(iv) The number of renewable oxygen credits generated as a result of actual total renewable oxygen being greater than compliance total renewable oxygen;

(v) The number of renewable oxygen credits required as a result of actual total renewable oxygen being less than compliance total renewable oxygen;

(vi) The number of renewable oxygen credits transferred to another refinery or importer;

(vii) The number of renewable oxygen credits obtained from another refinery or importer; and

(viii) For any renewable oxygen credits that are transferred from or to another refinery or importer, for any such transfer:

(A) The names, EPA-assigned registration numbers and facility identification numbers of the transferor and transferee of the credits;

(B) The number of renewable oxygen credits that were transferred; and

(C) The date of the transaction.

(h) *Renewable oxygenate requirements for reformulated gasoline used in the State of California.* (1) Any refiner or importer of California gasoline, as defined in §80.81, shall meet the renewable oxygenate standard specified in paragraph (a) of this section for all reformulated gasoline or RBOB used in

any reformulated gasoline covered area as specified in § 80.70.

(2) Any California gasoline shall be presumed to be used in a reformulated gasoline covered area:

(i)(A) If the gasoline is produced at a refinery that is located within a reformulated gasoline covered area; or

(B) If the gasoline is transported to a facility that is located within a reformulated gasoline covered area, or to a facility from which gasoline is transported by truck into a reformulated gasoline covered area; unless

(ii) The refiner or importer is able to establish with documentation that the gasoline was used outside any reformulated gasoline covered area.

(3) Any California gasoline shall be considered to be designated as VOC-controlled (for purposes of paragraph (a)(1) of this section) if the Reid vapor pressure of the gasoline, or RBOB subsequent to oxygenate blending, is intended to meet a standard of:

(i) 7.8 psi or less in the case of gasoline intended for use before March 1, 1996; or

(ii) 7.0 psi or less in the case of gasoline intended for use on or after March 1, 1996.

(i) *Special provisions for shoulder season*. (1) The Governor of any state may petition for an extension of the non-commingling season for any or all reformulated gasoline covered areas within the state pursuant to § 80.70.

(i) Such petition must satisfy the following criteria:

(A) Evidence showing an increase in the market share and/or use of oxygenates which produce commingling-related RVP increases in the area(s) that are covered by the petition;

(B) Evidence demonstrating a pattern of exceedances for the period for which the extension is sought, including ozone monitoring data for the preceding three(3) years of the reformulated gasoline program;

(C) An analysis showing that the pattern of ozone exceedances is likely to continue even with implementation of other ozone air quality control measures and/or programs currently planned by the State; and

(D) Evidence that the responsible State agency or authority has given the public an opportunity for a public hearing and the submission of written comments with respect to the petition.

(ii) Effective data and publication of decision.

(A) If the Administrator determines that the petition meets the requirements of paragraph (i)(1)(i) of this section, to the satisfaction of the Administrator, then EPA shall publish a notice in the FEDERAL REGISTER announcing its intention to establish the non-commingling season as requested by the Governor, and specifying a tentative effective date.

(1) The Administrator shall provide the public with an opportunity for a hearing and the submission of written comments.

(2) The tentative effective date will correspond with the first day of the next complete non-commingling season beginning not less than one year after receipt of the petition.

(B) If the Administrator receives adverse comments or information demonstrating to the satisfaction of the Administrator that the criteria of paragraph (i)(1)(i) of this section have not been met, that the tentative effective date is not reasonable, or that other good reasons exist to deny the petition, then the Administrator may reject the Governor's request for an extended non-commingling season, in whole or in part, or may delay the effective date by up to two (2) additional years. Absent receipt of such adverse comments or information, EPA shall publish a notice in the FEDERAL REGISTER announcing its approval of the petition and specifying an effective date for the extended non-commingling season.

(2) In the case of any refiner that produces RBOB, or any importer that imports RBOB, the oxygenate that is blended with the RBOB may be included with the refiner's or importer's compliance calculations under paragraph (d) of this section only if:

(i) The oxygenate meets the applicable renewable oxygenate definition under paragraph (a) of this section; and

(ii) In the case of RBOB designated for ''non VOC controlled ether only'' the refiner or importer assumes that ETBE or other oxygenate that does not exhibit volatility-related commingling

effects when mixed with other gasolines and approved by the EPA Administrator under subparagraph (a)(3) of this section will be blended with the RBOB and so labels the transfer documentation.

[59 FR 39290, Aug. 2, 1994]

EFFECTIVE DATE NOTE: At 59 FR 39290, Aug. 2, 1994, §80.83 was added effective September 1, 1994, except for paragraphs (g) and (h), which will not become effective until approval has been given by the Office of Management and Budget. A document will be published in the FEDERAL REGISTER once approval has been obtained. At 59 FR 60715, Nov. 28, 1994, this section was stayed, effective September 13, 1994.

§§80.84–80.89 [Reserved]

Subpart E—Anti-Dumping

SOURCE: 59 FR 7860, Feb. 16, 1994, unless otherwise noted.

§80.90 Conventional gasoline baseline emissions determination.

(a) *Annual average baseline values.* For any facility of a refiner or importer of conventional gasoline, the annual average baseline values of the facility's exhaust benzene emissions, exhaust toxics emissions, NO_x emissions, sulfur, olefins and T90 shall be determined using the following equation:

$$\text{BASELINE} = \frac{\text{SUMRBASE} \times \text{SUMRVOL} + \text{WNTRBASE} \times \text{WNTRVOL}}{\text{SUMRVOL} + \text{WNTRVOL}}$$

where

BASELINE=annual average baseline value of the facility,

SUMRBASE=summer baseline value of the facility,

SUMRVOL=summer baseline gasoline volume of the facility, per §80.91,

WNTRBASE=winter baseline value of the facility,

WNTRVOL=winter baseline gasoline volume of the facility, per §80.91.

(b) *Baseline exhaust benzene emissions—simple model.* (1) Simple model exhaust benzene emissions of conventional gasoline shall be determined using the following equation:

EXHBEN = (1.884 + 0.949xBZ + 0.113x(AR − BZ))

where

EXHBEN=exhaust benzene emissions,

BZ=fuel benzene value in terms of volume percent (per §80.91), and

AR=fuel aromatics value in terms of volume percent (per §80.91).

(2) The simple model annual average baseline exhaust benzene emissions for any facility of a refiner or importer of conventional gasoline shall be determined as follows:

(i) The simple model baseline exhaust benzene emissions shall be determined separately for summer and winter using the facility's oxygenated individual baseline fuel parameter values for summer and winter (per §80.91), respectively, in the equation specified in paragraph (b)(1) of this section.

(ii) The simple model annual average baseline exhaust benzene emissions of the facility shall be determined using the emissions values determined in paragraph (b)(2)(i) of this section in the equation specified in paragraph (a) of this section.

(c) *Baseline exhaust benzene emissions—complex model.* The complex model annual average baseline exhaust benzene emissions for any facility of a refiner or importer of conventional gasoline shall be determined as follows:

(1) The summer and winter complex model baseline exhaust benzene emissions shall be determined separately using the facility's oxygenated individual baseline fuel parameter values for summer and winter (per §80.91), respectively, in the appropriate complex model for exhaust benzene emissions described in §80.45.

(2) The complex model annual average baseline exhaust benzene emissions of the facility shall be determined using the emissions values determined in paragraph (c)(1) of this section in the equation specified in paragraph (a) of this section.

(d) *Baseline exhaust toxics emissions.* The annual average baseline exhaust toxics emissions for any facility of a refiner or importer of conventional gasoline shall be determined as follows:

(1) The summer and winter baseline exhaust emissions of benzene, formaldehyde, acetaldehyde, 1,3-butadiene, and polycyclic organic matter shall be determined using the oxygenated individual baseline fuel parameter values for summer and winter (per § 80.91), respectively, in the appropriate complex model for each exhaust toxic (per § 80.45).

(2) The summer and winter baseline total exhaust toxics emissions shall be determined separately by summing the summer and winter baseline exhaust emissions of each toxic (per paragraph (d)(1) of this section), respectively.

(3) The annual average baseline exhaust toxics emissions of the facility shall be determined using the emissions values determined in paragraph (d)(2) of this section in the equation specified in paragraph (a) of this section.

(e) *Baseline NO_X emissions.* The annual average baseline NO_X emissions for any facility of a refiner or importer of conventional gasoline shall be determined as follows:

(1) The summer and winter baseline NO_X emissions shall be determined using the baseline individual baseline fuel parameter values for summer and winter (per § 80.91), respectively, in the appropriate complex model for NO_X (per § 80.45).

(2) The annual average baseline NO_X emissions of the facility shall be determined using the emissions values determined in paragraph (e)(1) of this section in the equation specified in paragraph (a) of this section.

(3) The requirements specified in paragraphs (e) (1) and (2) of this section shall be determined separately using the oxygenated and nonoxygenated individual baseline fuel parameters, per § 80.91.

(f) *Applicability of Phase I and Phase II models.* The requirements of paragraphs (d) and (e) of this section shall be determined separately for the applicable Phase I and Phase II complex models specified in § 80.45.

(g) *Calculation accuracy.* Emissions values calculated per the requirements of this section shall be determined to four (4) significant figures. Sulfur, olefin and T90 values calculated per the requirements of this section shall be determined to the same number of decimal places as the corresponding value listed in § 80.91(c)(5).

[59 FR 7860, Feb. 16, 1994, as amended at 59 FR 36965, July 20, 1994]

§ 80.91 Individual baseline determination.

(a) *Baseline definition.* (1) The ''baseline'' or ''individual baseline'' of a refinery, refiner or importer, as applicable, shall consist of:

(i) An estimate of the quality, composition and volume of its 1990 gasoline, or allowable substitute, based on the requirements specified in §§ 80.91 through 80.93; and

(ii) Its baseline emissions values calculated per paragraph (f) of this section; and

(iii) Its 1990–1993 blendstock-to-gasoline ratios calculated per § 80.102.

(2)(i) The quality and composition of the 1990 gasoline of a refinery, refiner or importer, as applicable, shall be the set of values of the following fuel parameters: benzene content; aromatic content; olefin content; sulfur content; distillation temperature at 50 and 90 percent by volume evaporated; percent evaporated at 200 °F and 300 °F; oxygen content; RVP.

(ii) A refiner, per paragraph (b)(3)(i) of this section, shall also determine the API gravity of its 1990 gasoline.

(3) The methodology outlined in this section shall be followed in determining a baseline value for each fuel parameter listed in paragraph (a)(2) of this section.

(b) *Requirements for refiners, blenders and importers*—(1) *Requirements for producers of gasoline and gasoline blendstocks.* (i) A refinery engaged in the production of gasoline blendstocks from crude oil and/or crude oil derivatives, and the subsequent mixing of those blendstocks to form gasoline, shall have its baseline fuel parameter values determined from Method 1, 2 and/or 3-type data as described in paragraph (c) of this section, provided the

refinery was in operation for at least 6 months in 1990.

(ii) A refinery which was in operation for at least 6 months in 1990, was shut down after 1990, and which restarts after June 15, 1994, and for which insufficient 1990 and post-1990 data was collected prior to January 1, 1995 from which to determine an individual baseline, shall have the values listed in paragraph (c)(5) of this section as its individual baseline parameters.

(iii) A refinery which was in operation for less than 6 months in 1990 shall have the values listed in paragraph (c)(5) of this section as its individual baseline parameters.

(2) *Requirements for producers or importers of gasoline blendstocks only.* A refiner or importer of gasoline blendstocks which did not produce or import gasoline in 1990 and which produces or imports post-1994 gasoline shall have the values listed in paragraph (c)(5) of this section as its individual baseline parameters.

(3) *Requirements for purchasers of gasoline and/or gasoline blendstocks.* (i) A refiner or refinery, as applicable, solely engaged in the production of gasoline from gasoline blendstocks and/or gasoline which are simply purchased and blended to form gasoline shall have its individual baseline determined using Method 1-type data (per paragraph (c) of this section) from every batch of 1990 gasoline.

(ii) If Method 1-type data on every batch of the refiner's or refinery's 1990 gasoline does not exist, that refiner or refinery shall have the values listed in paragraph (c)(5) of this section as its individual baseline parameters.

(4) *Requirements for importers of gasoline and/or gasoline blendstocks.* (i) An importer of gasoline shall determine an individual baseline value for each fuel parameter listed in paragraph (a)(2) of this section using Method 1-type data on every batch of gasoline imported by that importer into the United States in 1990.

(ii) An importer which is also a foreign refiner must determine its individual baseline using Method 1, 2 and/or 3-type data (per paragraph (c) of this section) if it imported at least 75 percent, by volume, of the gasoline produced at its foreign refinery in 1990 into the United States in 1990.

(iii) An importer which cannot meet the criteria of paragraphs (b)(4)(i) or (ii) of this section for baseline determination shall have the parameter values listed in paragraph (c)(5) of this section as its individual baseline parameter values.

(5) *Requirements for exporters of gasoline and/or gasoline blendstocks.* A refiner shall not include quality or volume data on its 1990 exports of gasoline blendstocks or gasoline in its baseline determination.

(c) *Data types*—(1) *Method 1-type data.* (i) Method 1-type data shall consist of quality (composition and property data) and volume records of gasoline produced in or shipped from the refinery in 1990, excluding exported gasoline. The measured fuel parameter values and volumes of batches, or shipments if not batch blended, shall be used except that data on produced gasoline which was also shipped shall be included only once.

(ii) Gasoline blendstock which left a facility in 1990 and which could become gasoline solely upon the addition of oxygenate shall be included in the baseline determination.

(A) Fuel parameter values of such blendstock shall be accounted for as if the gasoline blendstock were blended with ten (10.0) volume percent ethanol.

(B) If the refiner or importer can provide evidence that such gasoline blendstock was not blended per paragraph (c)(1)(ii)(A) of this section, and that such gasoline blendstock was blended with another oxygenate or a different volume of ethanol, the fuel parameter values of the final gasoline (including oxygenate) shall be included in the baseline determination.

(C) If the refiner or importer can provide evidence that such gasoline blendstock was not blended per paragraph (c)(1)(ii)(A) or (B) of this section, and that such gasoline blendstock was sold with out further changes downstream, the fuel parameter values of the original product shall be included in the baseline determination.

(iii) Data on 1990 gasoline purchased or otherwise received, including intracompany transfers, shall not be included in the baseline determination

of a refiner's or importer's facility if the gasoline exited the receiving refinery unchanged from its arrival state.

(2) *Method 2-type data.* Method 2-type data shall consist of 1990 gasoline blendstock quality data and 1990 blendstock production records, specifically the measured fuel parameter values and volumes of blendstock used in the production of gasoline within the refinery. Blendstock data shall include volumes purchased or otherwise received, including intracompany transfers, if the volumes were blended as part of the refiner's or importer's 1990 gasoline. Henceforth in §§ 80.91 through 80.93, ''blendstock(s)'' or ''gasoline blendstock(s)'' shall include those products or streams commercially blended to form gasoline.

(3) *Method 3-type data.* (i) Method 3-type data shall consist of post-1990 gasoline blendstock and/or gasoline quality data and 1990 blendstock and gasoline production records, specifically the measured fuel parameter values and volumes of blendstock used in the production of gasoline within the refinery. Blendstock data shall include volumes purchased or otherwise received, including intracompany transfers, if the volumes were blended as part of the refiner's or importer's 1990 gasoline.

(ii) In order to use Method 3-type data, the refiner or importer must do all of the following:

(A) Include a detailed discussion comparing its 1990 and post-1990 refinery operations and all other differences which would cause the 1990 and post-1990 fuel parameter values to differ; and

(B) Perform the appropriate calculations so as to adjust for the differences determined in paragraph (c)(3)(ii)(A) of this section; and

(C) Include a narrative, discussing the methodology and reasoning for the adjustments made per paragraph (c)(3)(ii)(B) of this section.

(iii) In order to use post-1990 gasoline data, either of the following must be shown for each blendstock-type included in 1990 gasoline, excluding butane:

(A) The post-1990 volumetric fraction of a blendstock is within (+/−)10.0 percent of the volumetric fraction of that blendstock in 1990 gasoline. For example, if a 1990 blendstock constituted 30 volume percent of 1990 gasoline, this criterion would be met if the post-1990 volumetric fraction of the blendstock in post-1990 gasoline was 27.0–33.0 volume percent.

(B) The post-1990 volumetric fraction of a blendstock is within (+/−)2.0 volume percent of the absolute value of the 1990 volumetric fraction. For example, if a 1990 blendstock constituted 5 volume percent of 1990 gasoline, this criterion would be met if the post-1990 volumetric fraction of the blendstock in post-1990 gasoline was 3–7 volume percent.

(iv) If using post-1990 gasoline data, post-1990 gasoline blendstock which left a facility and which could become gasoline solely upon the addition of oxygenate shall be included in the baseline determination, per the requirements specified in paragraph (c)(1)(ii) of this section.

(4) *Hierarchy of data use.* (i) A refiner or importer must determine a baseline fuel parameter value using only Method 1-type data if sufficient Method 1-type data is available, per paragraph (d)(1)(ii) of this section.

(ii) If a refiner has insufficient Method 1-type data for a baseline parameter value determination, it must supplement that data with all available Method 2-type data, until it has sufficient data, per paragraph (d)(1)(iii) of this section.

(iii) If a refiner has insufficient Method 1- and Method 2-type data for a baseline parameter value determination, it must supplement that data with all available Method 3-type data, until it has sufficient data, per paragraph (d)(1)(iii) of this section.

(iv) The protocol for the determination of baseline fuel parameter values in paragraphs (c)(4)(i) through (iii) of this section shall be applied to each fuel parameter one at a time.

(5) *Anti-dumping statutory baseline.* (i) The summer anti-dumping statutory baseline shall have the set of fuel parameter values identified as ''summer'' in § 80.45(b)(2). The anti-dumping summer API gravity shall be 57.4 °API.

(ii) The winter anti-dumping statutory baseline shall have the set of fuel parameter values identified as ''winter'' in § 80.45(b)(2), except that winter

RVP shall be 8.7 psi. The anti-dumping winter API gravity shall be 60.2 API.

(iii) The annual average anti-dumping statutory baseline shall have the following set of fuel parameter values:

Benzene, volume percent—1.60
Aromatics, volume percent—28.6
Olefins, volume percent—10.8
RVP, psi—8.7
T50, degrees F—207
T90, degrees F—332
E200, percent—46
E300, percent—83
Sulfur, ppm—338
API Gravity, °API—59.1

(iv) The annual average anti-dumping statutory baseline shall have the following set of emission values:

Exhaust benzene emissions, simple model—6.45
Exhaust benzene emissions, complex model—33.03 mg/mile
Exhaust toxics emissions, Phase I—50.67 mg/mile
Exhaust toxics emissions, Phase II—104.5 mg/mile
NO_X emissions, Phase I—714.4 mg/mile
NO_X emissions, Phase II—1461. mg/mile

(d) *Data collection and testing requirements*—(1) *Minimum sampling requirements*—(i) *General requirements.* (A) Data shall have been obtained for at least three months of the refiner's or importer's production of summer gasoline and at least three months of its production of winter gasoline. When method 1 per batch RVP data is available, a month is considered equivalent to 4 weeks of seasonal data.

(*1*) Method 1, per batch, actual RVP data will be used to define that batch as either summer fuel or winter fuel. Summer fuel is defined as fuel produced and intended for sale to satisfy federal summer volatility standards. When such per batch actual RVP data is not available, data is allocated per month as follows. A summer month is defined as any month during which more than 50 percent (by volume) of the gasoline produced by a refiner met the federal summer gasoline volatility requirements. Winter shall be any month which could not be considered a summer month under this definition.

(2) The three months which compose the summer and the winter data do not have to be consecutive nor within the same year.

(3) If, in 1990, a refiner marketed all of its gasoline only in an area or areas which experience no seasonal changes relative to gasoline requirements, e.g., Hawaii, only 3 months of data are required.

(B) Once the minimum sampling requirements have been met, data collection may cease. Additional data may only be included for the remainder of the calendar year in which the minimum sampling requirements were met. In any case, all data collected through the date of collection of the last data point included in the determination of a baseline fuel parameter value must be utilized in the baseline determination of that fuel parameter.

(C) Less than the minimum requirements specified in paragraph (d)(1) of this section may be allowed, upon petition and approval (per § 80.93), if it can be shown that the available data is sufficient in quality and quantity to use in the baseline determination.

(ii) *Method 1 sampling requirements.* At least half of the batches, or shipments if not batch blended, in a calendar month shall have been sampled over a minimum of six months in 1990.

(iii) *Method 2 sampling requirements.* (A) Continuous blendstock streams shall have been sampled at least weekly over a minimum of six months in 1990.

(B) For blendstocks produced on a batch basis, at least half of all batches of a single blendstock type produced in a calendar month shall have been sampled over a minimum of six months in 1990.

(iv) *Method 3 sampling requirements*—(A) *Blendstock data. (1)* Post-1990 continuous blendstock streams shall have been sampled at least weekly over a minimum of six months.

(2) For post-1990 blendstocks produced on a batch basis, at least half of all batches of a single blendstock type produced in a calendar month shall have been sampled over a minimum of six months.

(B) *Gasoline data.* At least half of the post-1990 batches, or shipments if not batch blended, in a calendar month

shall have been sampled over a minimum of six months in order to use post-1990 gasoline data.

(2) *Sampling beyond today's date.* The necessity and actual occurrence of data collection after today's date must be shown.

(3) *Negligible quantity sampling.* Testing of a blendstock stream for a fuel parameter listed in this paragraph (d)(3) is not required if the refiner can show that the fuel parameter exists in the stream at less than or equal to the amount, on average, shown in this paragraph (d)(3) for that fuel parameter. Any fuel parameter shown to exist in a refinery stream in negligible amounts shall be assigned a value of 0.0:

Aromatics, volume percent—1.0
Benzene, volume percent—0.15
Olefins, volume percent—1.0
Oxygen, weight percent—0.2
Sulfur, ppm—30.0

(4) *Sample compositing.* (i) Samples of gasoline or blendstock which have been retained, but not analyzed, may be mixed prior to analysis and analyzed, as described in paragraphs (d)(4)(iii) (A) through (H) of this section, for the required fuel parameters. Samples must be from the same season and year and must be of a single grade or of a single type of batch-produced blendstock.

(ii) Blendstock samples of a single blendstock type obtained from continuous processes over a calendar month may be mixed together in equal volumes to form one blendstock sample and the sample subsequently analyzed for the required fuel parameters.

(iii)(A) Samples shall have been collected and stored per the method normally employed at the refinery in order to prevent change in product composition with regard to baseline properties and to minimize loss of volatile fractions of the sample.

(B) Properties of the retained samples shall be adjusted for loss of butane by comparing the RVP measured right after blending with the RVP determined at the time that the supplemental properties are measured.

(C) The volume of each batch or shipment sampled shall have been noted and the sum of the volumes calculated to the nearest hundred (100) barrels.

(D) For each batch or shipment sampled, the ratio of its volume to the total volume determined in paragraph (d)(4)(iii)(C) of this section shall be determined to three (3) decimal places. This shall be the volumetric fraction of the shipment in the mixture.

(E) The total minimum volume required to perform duplicate analyses to obtain values of all of the required fuel parameters shall be determined.

(F) The volumetric fraction determined in paragraph (d)(4)(iii)(D) of this section for each batch or shipment shall be multiplied by the value determined in paragraph (d)(4)(iii)(E) of this section.

(G) The resulting value determined in paragraph (d)(4)(iii)(F) of this section for each batch or shipment shall be the volume of each batch or shipment's sample to be added to the mixture. This volume shall be determined to the nearest milliliter.

(H) The appropriate volumes of each shipment's sample shall be thoroughly mixed and the solution analyzed per the methods normally employed at the refinery.

(5) *Test methods.* (i) If the test methods used to obtain fuel parameter values of gasoline and gasoline blendstocks differ or are otherwise not equivalent in precision or accuracy to the corresponding test method specified in § 80.46, results obtained under those procedures will only be acceptable, upon petition and approval (per § 80.93), if the procedures are or were industry-accepted procedures for measuring the properties of gasoline and gasoline blendstocks at the time the measurement was made.

(ii) Oxygen content may have been determined analytically or from oxygenate blending records.

(A) The fuel parameter values, other than oxygen content, specified in paragraph (a) of this section, must be established as for any blendstock, per the requirements of this paragraph (d).

(B) All oxygen associated with allowable gasoline oxygenates per § 80.2(jj) shall be included in the determination of the baseline oxygen content, if oxygen content was determined analytically.

(C) Oxygen content shall be assumed to be contributed solely by the oxygenate which is indicated on the blending records, if oxygen content was determined from blending records.

(6) *Data quality.* Data may be excluded from the baseline determination if it is shown to the satisfaction of the Director of the Office of Mobile Sources, or designee, that it is not within the normal range of values expected for the gasoline or blendstock sample, considering unit configuration, operating conditions, etc.; due to:

(i) Improper labeling; or

(ii) Improper testing; or

(iii) Other reasons as verified by the auditor specified in § 80.92.

(e) *Baseline fuel parameter determination*—(1) *Closely integrated gasoline producing facilities.* Each refinery or blending facility must determine a set of baseline fuel parameter values per this paragraph (e). A single set of baseline fuel parameters may be determined, upon petition and approval, for two or more facilities under either of the following circumstances:

(i) Two or more refineries or sets of gasoline blendstock-producing units of a refiner engaged in the production of gasoline per paragraph (b)(1) of this section which are geographically proximate to each other, yet not within a single refinery gate, and whose 1990 operations were significantly interconnected.

(ii) A gasoline blending facility operating per paragraph (b)(3) of this section received at least 75 percent of its 1990 blendstock volume from a single refinery, or from one or more refineries which are part of an aggregate baseline per § 80.101(h). The blending facility and associated refinery(ies) must be owned by the same refiner.

(2) *Equations*—(i) *Parameter determinations.* Average baseline fuel parameters shall be determined separately for summer and winter using summer and winter data (per paragraph (d)(1)(i)(A) of this section), respectively, in the applicable equation listed in paragraphs (e)(2) (ii) through (iv) of this section, except that average baseline winter RVP shall be 8.7 psi.

(ii) *Product included in parameter determinations.* In each of the equations listed in paragraphs (e)(2) (ii) through (iv) of this section, the following shall apply:

(A) All gasoline produced to meet EPA's 1990 summertime volatility requirements shall be considered summer gasoline. All other gasoline shall be considered winter gasoline.

(B)*(1)* Baseline total annual 1990 gasoline volume shall be the larger of the total volume of gasoline produced in or shipped from the refinery in 1990.

(2) Baseline summer gasoline volume shall be the total volume of low volatility gasoline which met EPA's 1990 summertime volatility requirements. Baseline summer gasoline volume shall be determined on the same basis (produced or shipped) as baseline total annual gasoline volume.

(3) Baseline winter gasoline volume shall be the baseline total annual gasoline volume minus the baseline summer gasoline volume.

(C) Fuel parameter values shall be determined in the same units and at least to the same number of decimal places as the corresponding fuel parameter listed in paragraph (c)(5) of this section.

(D) Volumes shall be reported to the nearest barrel or to the degree at which historical records were kept.

(iii) *Method 1.* Summer and winter Method 1-type data, per paragraph (c)(1) of this section, shall be evaluated separately according to the following equation:

$$X_{bs} = \sum_{g=1}^{p_s} \left(\frac{T_{gs}}{n_s} \times \frac{\sum_{i=1}^{n_{gs}} \left(X_{gis} \times V_{gis} \times SG_{gis} \right)}{\sum_{i=1}^{n_{gs}} \left(V_{gis} \times SG_{gis} \right)} \right)$$

where:

X_{bs}=summer or winter baseline value of fuel parameter X for the refinery

s=season, summer or winter, per paragraph (d)(1)(i)(A)(*1*) of this section

g=separate grade of season s gasoline produced by the refinery in 1990

p_s=total number of different grades of season s gasoline produced by the refinery in 1990

T_{gs}=total volume of season s grade g gasoline produced in 1990

N_s=total volume of season s gasoline produced by the refinery in 1990

i=separate batch or shipment of season s 1990 gasoline sampled

n_{gs}=total number of season s samples of grade g gasoline

X_{gis}=parameter value of grade g gasoline sample i in season s

V_{gis}=volume of season s grade g gasoline sample i

SG_{gis}=specific gravity of season s grade g gasoline sample i (used only for fuel parameters measured on a weight basis)

(iv) *Method 2.* Summer and winter Method 2-type data, per paragraph (c)(2) of this section, shall be evaluated separately according to the following equation:

$$X_{bs}^{m_s} = \sum_{j=1}^{T_{js}} \left\{ \frac{}{N_s} \times \left(\frac{\sum_{i=1}^{n_{js}} X_{ijs}}{n_{js}} + \frac{\sum_{i=1}^{p_{js}} \left(X_{ijs} \times V_{ijs} \times SG_{ijs} \right)}{\sum_{i=1}^{p_{js}} \left(V_{ijs} \times SG_{ijs} \right)} \right) \right\}$$

where

X_{bs}=Summer or winter baseline value of fuel parameter X for the refinery

s=season, summer or winter, per paragraph (d)(1)(i)(A)(*1*) of this section

j=type of blendstock (e.g., reformate, isomerate, alkylate, etc.)

m_s=total types of blendstocks in season s 1990 gasoline

T_{js}=total 1990 volume of blendstock j used in the refinery's season s gasoline

N_s=total volume of season s gasoline produced in the refinery in 1990

i=sample of blendstock j

n_{js}=number of samples of season s blendstock j from continuous process streams

X_{ijs}=parameter value of sample i of season s blendstock j

p_{js}=number of samples of season s batch-produced blendstock j

V_{ijs}=volume of batch of sample i of season s blendstock j

SG_{ijs}=specific gravity of sample i of season s blendstock j (used only for fuel parameters measured on a weight basis)

(v) *Method 3.* (A) Post-1990 Blendstock. Summer and winter Method 3-type data, per paragraph (c)(3) of this section, shall be evaluated separately according to the following equation:

$$X_{bs} = \sum_{j=1}^{m_s} \left(\frac{T_{js}}{N_s} \times \left(\frac{\sum_{i=1}^{n_{js}} X_{ijs}}{n_{js}} + \frac{\sum_{i=1}^{p_{js}} \left(X_{ijs} \times V_{ijs} \times SG_{ijs} \right)}{\sum_{i=1}^{p_{js}} \left(V_{ijs} \times SG_{ijs} \right)} \right) \right)$$

where

X_{bs}=Summer or winter baseline value of fuel parameter X for the refinery

s=season, summer or winter, per paragraph (d)(1)(i)(A)(*1*) of this section

j=type of blendstock (e.g., reformate, isomerate, alkylate, etc.)

m_s=total types of blendstocks in season s 1990 gasoline

T_{js}=total 1990 volume of blendstock j used in the refinery's season s gasoline

N_s=total volume of season s gasoline produced in the refinery in 1990

i=sample of post-1990 season s blendstock j

n_{js}=number of samples of post-1990 season s blendstock j from continuous process streams

X_{ijs}=parameter value of sample i of post-1990 season s blendstock j

p_{js}=number of samples of post-1990 season s batch-produced blendstock j

V_{ijs}=volume of post-1990 batch of sample i of season s blendstock j

SG_{ijs}=specific gravity of sample i of season s blendstock j (used only for fuel parameters measured on a weight basis)

(B) Post-1990 gasoline. Summer and winter Method 3-type gasoline data, per paragraph (c)(3) of this section, shall be evaluated separately according tothe following equation:

$$X_{bs} = \sum_{g=1}^{p_s} \left(\frac{T_{gs}}{N_s} \times \frac{\sum_{i=1}^{n_{gs}} \left(X_{gis} \times V_{gis} \times SG_{gis} \right)}{\sum_{i=1}^{n_{gs}} \left(V_{gis} \times SG_{gis} \right)} \right)$$

where:

X_{bs}=Summer or winter baseline value of fuel parameter X for the refinery

s=season, summer or winter, per paragraph (d)(1)(i)(A)(*1*) of this section

g=separate grade of season s gasoline produced by the refinery in 1990

p_s=total number of different grades of season s gasoline produced by the refinery in 1990

T_{gs}=total volume of season s grade g gasoline produced in 1990

N_s=total volume of season s gasoline produced by the refinery in 1990

i=separate batch or shipment of post-1990 season s gasoline sampled

n_{gs}=total number of samples of post-1990 season s grade g gasoline

X_{gis}=parameter value of post-1990 grade g season s gasoline sample i

V_{gis}=volume of post-1990 season s grade g gasoline sample i

SG_{gis}=specific gravity of post-1990 season s grade g gasoline sample i (used only for fuel parameters measured on a weight basis)

(3) *Percent evaporated determination.* (i) Baseline E200 and E300 values shall be determined directly from actual measurement data.

(ii) If the data per paragraph (e)(3)(i) of this section are unavailable, upon petition and approval, baseline E200 and E300 values shall be determined from the following equations using the baseline T50 and T90 values, if the baseline T50 and T90 values are otherwise acceptable:

$E200=147.91-(0.49\times T50)$

$E300=155.47-(0.22\times T90)$

(4) *Oxygen in the baseline.* Baseline fuel parameter values shall be determined on both an oxygenated and non-oxygenated basis.

(i) If baseline values are determined first on an oxygenated basis, per paragraph (e) of this section, the calculations in paragraphs (e)(4)(i) (A) through (C) of this section shall be performed to determine the value of each baseline parameter on a non-oxygenated basis.

(A) Benzene, aromatic, olefin and sulfur content shall be determined on a non-oxygenated basis according to the following equation:

$UV = [AV/(100-OV)] \times 100$

where

UV=non-oxygenated parameter value

AV=oxygenated parameter value

OV=1990 oxygenate volume as a percent of total production

(B) Reid vapor pressure (RVP) shall be determined on a non-oxygenated basis according to the following equation:

$$UR = \left[BR - \left\{ \sum_{i=1}^{n} \left(OV_i \times OR_i \right) \right\} 100 \right] \quad \left[\left\{ 100 - \sum_{i=1}^{n} OV_i \right\} 100 \right]$$

where

UR=non-oxygenated RVP (baseline value)

BR=oxygenated RVP

i=type of oxygenate used in 1990

n=total number of different types of oxygenates used in 1990

OV_i=1990 volume, as a percent of total production, of oxygenate i

OR_i=blending RVP of oxygenate i

(C) Test data and engineering judgement shall be used to estimate T90, T50, E300 and E200 baseline values on a non-oxygenated basis. Allowances shall be made for physical dilution and distillation effects only, and not for refinery operational changes, e.g., decreased reformer severity required due to the octane value of oxygenate which would reduce aromatics.

(ii) If baseline values are determined first on a non-oxygenated basis, the calculations in paragraphs (e)(4)(ii) (A) through (C) of this section shall be performed to determine the value of each baseline parameter on an oxygenated basis.

(A) Benzene, aromatic, olefin and sulfur content shall be determined on an oxygenated basis according to the following equation:

AV = UV x (100 − OV)/100

where

AV=oxygenated parameter value

UV = non-oxygenated parameter value

OV=1990 oxygenate volume as a percent of total production

(B) Reid vapor pressure (RVP) shall be determined on an oxygenated basis according to the following equation:

$$BR = \left\{ UR \times \left[100 - \sum_{i=1}^{n} (OV_i) \right] + \sum_{i=1}^{n} \left(OV_i \times OR_i \right) \right\} 100$$

where

BR=oxygenated RVP

UR=non-oxygenated RVP

i=type of oxygenate

n=total number of different types of oxygenates

OV_i=1990 volume, as a percent of total production, of oxygenate i

OR_i=blending RVP of oxygenate i

(C) Test data and engineering judgement shall be used to estimate T90, T50, E300 and E200 baseline values on an oxygenated basis. Allowances shall be made for physical dilution and distillation effects only, and not for refinery operational changes, e.g., decreased reformer severity required due to the octane value of oxygenate which would reduce aromatics.

(5) *Work-in-progress.* A refiner may, upon petition and approval (per § 80.93), be allowed to account for work- in-progress at one or more of its refineries in 1990 in the determination of that refinery's baseline fuel parameters using Method 1, 2 or 3-type data if it meets the requirements specified in this paragraph (e)(5).

(i) Work-in-progress shall include:

(A) Refinery modification projects involving gasoline blendstock or distillate producing units which were under construction in 1990; or

(B) Refinery modification projects involving gasoline blendstock or distillate producing units which were contracted for prior to or in 1990 such that the refiner was committed to purchasing materials and constructing the project.

(ii) The modifications discussed in paragraph (e)(5)(i) of this section must have been initiated with intent of complying with a legislative or regulatory environmental requirement enacted or promulgated prior to January 1, 1991.

(iii) When comparing emissions or parameter values determined with and without the anticipated work-in-progress adjustment, at least one of the following situations results when comparing annual average baseline values per § 80.90:

(A) A 2.5 percent or greater difference in exhaust benzene emissions (per § 80.90); or

(B) A 2.5 percent or greater difference in total exhaust toxics emissions (per § 80.90(d)); or

(C) A 2.5 percent or greater difference in NO_X emissions (per § 80.90(e)); or

(D) A 10.0 percent or greater difference in sulfur values; or

(E) A 10.0 percent or greater difference in olefin values; or

(F) A 10.0 percent or greater difference in T90 values.

(iv) The requirements of paragraph (e)(5)(iii) of this section shall be determined according to the following equation:

$$\text{Percent Difference} = \frac{\left|\text{Unadjusted Value} - \text{Adjusted Value}\right|}{\text{Unadjusted Value}} \times 100$$

(v) The capital involved in the work-in-progress is at least:

(A) 10.0 percent of the refinery's depreciated book value as of the work-in-progress start-up date; or

(B) $10 million.

(vi) Sufficient data shall have been obtained since reliable operation of the work-in-progress was achieved. Such data shall be used in the determination of the baseline value, due to the work-in-progress, of each of the fuel parameters specified in § 80.91(a)(2)(i) and as verification of the effect of the work-in-progress.

(A) The baseline value, due to the work-in-progress, of each of the fuel parameters specified in § 80.91(a)(2)(i) shall be used in the determination of the emissions specified in § 80.90.

(B) The baseline values of sulfur, olefins and E300, due to the work-in-progress, shall be used in the determination of the emissions specified in § 80.41(j)(3).

(vii) The annual average baseline values of exhaust benzene emissions, per § 80.90(b) and § 80.90(c), exhaust toxics emissions, per § 80.90(d), and NO_X emissions, per § 80.90(e), are the values resulting from the work-in-progress baseline adjustment, not to exceed the larger of:

(A) The unadjusted annual average baseline value of each emission specified in this paragraph (e)(5)(vii); or

(B) The following values:

(1) Exhaust benzene emissions, simple model, 6.77;

(2) Exhaust benzene emissions, complex model, 34.68 mg/mile;

(3) Exhaust toxics emissions, 53.20 mg/mile in Phase I, 109.7 mg/mile in Phase II;

(4) NO_X emissions, 750.1 mg/mile in Phase I, 1534. mg/mile in Phase II.

(viii) When compliance is achieved using the simple model, per § 80.41 and/or § 80.101, the baseline values of sulfur, olefins and T90 are the values resulting from the work-in-progress baseline adjustment, not to exceed the larger of:

(A) The unadjusted annual average baseline value of each fuel parameter specified in paragraph (e)(5)(viii) of this section; or

(B) The following values:

(*1*) Sulfur, 355 ppm;

(*2*) Olefins, 11.3 volume percent;

(*3*) T90, 349 °F; or

(C) An adjusted annual average baseline fuel parameter value for sulfur, olefins and T90 such that exhaust emissions of VOC, toxics, and NO_X do not exceed the complex model emission levels specified in paragraph (e)(5)(vii)(B) of this section. In the petition for a work-in-progress adjustment, the refiner shall specify sulfur, olefins and T90 values that meet these emission levels.

(ix) All work-in-progress adjustments must be accompanied by:

(A) Unadjusted and adjusted fuel parameters, emissions, and volumes; and

(B) A description of the current status of the work-in-progress (i.e., the refinery modification project) and the date on which normal operations were achieved; and

(C) A narrative describing the situation, the types of calculations, and the reasoning supporting the types of calculations done to determine the adjusted values.

(6) *Baseline adjustment for extenuating circumstances.* (i) Baseline adjustments may be allowed, upon petition and approval (per §80.93), if a refinery had downtime of a gasoline blendstock producing unit for 30 days or more in 1990 due to:

(A) Unplanned, unforeseen circumstances; or

(B) Non-annual maintenance (turnaround).

(ii) Fuel parameter and volume adjustments shall be made by assuming that the downtime did not occur in 1990.

(iii) All extenuating circumstance adjustments must be accompanied by:

(A) Unadjusted and adjusted fuel parameters, emissions, and volumes; and

(B) A description of the current status of the extenuating circumstance and the date on which normal operations were achieved; and

(C) A narrative describing the situation, the types of calculations, and the reasoning supporting the types of calculations done to determine the adjusted values.

(7) *Baseline adjustments for 1990 JP–4 production.* (i) Baseline adjustments may be allowed, upon petition and approval (per §80.93), if a refinery produced JP–4 jet fuel in 1990 and all of the following requirements are also met:

(A) Refinery type.

(*1*) The refinery is the only refinery of a refiner such that it cannot form an aggregate baseline with another refinery (per §80.101(h)); or

(*2*) The refinery is one refinery of a multi-refinery refiner for which all of the refiner's refineries produced JP–4 in 1990; or

(*3*) The refinery is one refinery of a multi-refinery refiner for which not all of the refiner's refineries produced JP–4 in 1990.

(B) No refinery of a given refiner produces reformulated gasoline. If any refinery of the refiner produces reformulated gasoline at any time in a calendar year, the compliance baselines of all the refiner's refineries receiving a baseline adjustment per this paragraph (e)(7) shall revert to the unadjusted baselines of each respective refinery for that year and all subsequent years.

(C) 1990 JP–4 to gasoline ratio.

(*1*) For a refiner per paragraph (e)(7)(i)(A)(*1*) of this section, the ratio of its refinery's 1990 JP–4 production to its 1990 gasoline production must be greater than or equal to 0.15.

(*2*) For a refiner per paragraph (e)(7)(i)(A)(*2*) of this section, the ratio of each of its refinery's 1990 JP–4 production to its 1990 gasoline production must be greater than or equal to 0.15.

(*3*) For a refiner per paragraph (e)(7)(i)(A)(*3*) of this section, the ratio of the refiner's 1990 JP–4 production to its 1990 gasoline production must be greater than or equal to 0.15, when determined across all of its refineries. Such a refiner must comply with its anti-dumping requirements on an aggregate basis, per §80.101(h), across all of its refineries.

(ii) Fuel parameter and volume adjustments shall be made by assuming that no JP–4 was produced in 1990.

(iii) All adjustments due to 1990 JP–4 production must be accompanied by:

(A) Unadjusted and adjusted fuel parameters, emissions, and volumes; and

(B) A narrative describing the situation, the types of calculations, and the reasoning supporting the types of calculations done to determine the adjusted values.

(8) Baseline adjustments due to increasing crude sulfur content.

(i) Baseline adjustments may be allowed, upon petition and approval (per § 80.93), if a refinery meets all of the following requirements:

(A) The refinery does not produce reformulated gasoline. If the refinery produces reformulated gasoline at any time in a calendar year, its compliance baseline shall revert to its unadjusted baseline for that year and all subsequent years;

(B) Has an unadjusted baseline sulfur value which is less than or equal to 50 parts per million (ppm);

(C) Is not aggregated with one or more other refineries (per § 80.101(h)). If a refinery which received an adjustment per this paragraph (e)(8) subsequently is included in an aggregate baseline, its compliance baseline shall revert to its unadjusted baseline for that year and all subsequent years;

(D) Can show that installation of the refinery units necessary to process higher sulfur crude oil supplies to comply with the refinery's unadjusted baseline would cost at least $10 million or be greater than or equal to 10 percent of the depreciated book value of the refinery as of January 1, 1995;

(E) Can show that it could not reasonably or economically obtain crude oil from an alternative source that would permit it to produce conventional gasoline which would comply with its unadjusted baseline;

(F) Has experienced an increase of greater than or equal to 25 percent in the average sulfur content of the crude oil used in the production of gasoline in the refinery since 1990, calculated as follows:

$$\frac{(CSHI - CS90)}{CS90} \times 100 = CS\%CHG$$

Where:

CSHI=highest annual average crude sulfur (in ppm), of the crude slates used in the production of gasoline, determined over the years 1991–1994;

CS90=1990 annual average crude slate sulfur (in ppm), of the crude slates used in the production of gasoline;

CS%CHG=percent change in average sulfur content of crude slate;

(G) Can show that gasoline sulfur changes are directly and solely attributable to the crude sulfur change, and not due to alterations in refinery operation nor choice of products.

(ii) The adjusted baseline sulfur value shall be the actual baseline sulfur value, in ppm, plus 100 ppm.

(iii) All adjustments made pursuant to this paragraph (e)(8) must be accompanied by:

(A) Unadjusted and adjusted fuel parameters and emissions; and

(B) A narrative describing the situation, the types of calculations, and the reasoning supporting the types of calculations done to determine the adjusted values.

(9) Baseline adjustment for low sulfur and olefins.

(i) Baseline adjustments may be allowed if a refinery meets all of the following requirements:

(A) The unadjusted annual average baseline sulfur value of the refinery is less than or equal to 30 parts per million (ppm);

(B) The unadjusted annual average baseline olefin value of the refinery is less than or equal to 1.0 percent by volume (vol%).

(ii) Adjusted baseline values.

(A) The adjusted baseline shall have an annual average sulfur value of 30 ppm, and an annual average olefin value of 1.0 vol%.

(B) The adjusted baseline shall have a summer sulfur value of 30 ppm, and a summer olefin value of 1.0 vol%.

(C) The adjusted baseline shall have a winter sulfur value of 30 ppm, and a winter olefin value of 1.0 vol%.

(f) *Baseline volume and emissions determination*—(1) *Individual baseline volume.* (i) The individual baseline volume of a refinery described in paragraph (b)(1)(i) of this section shall be the larger of the total gasoline volume produced in or shipped from the refinery in 1990, excluding gasoline blendstocks and exported gasoline, and including the oxygenate volume associated with any product meeting the requirements specified in paragraph (c)(1)(ii) of this section.

(ii) Gasoline brought into the refinery in 1990 which exited the refinery, in 1990, unchanged shall not be included

in determining the refinery's baseline volume.

(iii) If a refiner is allowed to adjust its baseline per paragraphs (e)(5) through (e)(7) of this section, its individual baseline volume shall be the volume determined after the adjustment.

(iv) The individual baseline volume for facilities deemed closely integrated, per paragraph (e)(1) of this section, shall be the combined 1990 gasoline production of the facilities, so long as mutual volumes are not double-counted, i.e., volumes of blendstock sent from the refinery to the blending facility should not be included in the blending facility's volume.

(v) The baseline volume of a refiner, per paragraph (b)(3) of this section, shall be the larger of the total gasoline volume produced in or shipped from the refinery in 1990, excluding gasoline blendstocks and exported gasoline.

(vi) The baseline volume of an importer, per paragraph (b)(4) of this section, shall be the total gasoline volume imported into the U.S. in 1990.

(2) *Individual baseline emissions.* (i) Individual annual average baseline emissions (per § 80.90) shall be determined for every refinery, refiner or importer, as applicable.

(ii) If the baseline fuel value for aromatics, olefins, and/or benzene (determined per paragraph (e) of this section) is higher than the high end of the valid range limits specified in § 80.42(c)(1) if compliance is being determined under the Simple Model, or in § 80.45(f)(1)(ii) if compliance is being determined under the Complex Model, then the valid range limits may be extended for conventional gasoline in the following manner:

(A) The new high end of the valid range for aromatics is determined from the following equation:

NAROLIM = AROBASE + 5.0 volume percent

where

NAROLIM = The new high end of the valid range limit for aromatics, in volume percent

AROBASE = The seasonal baseline fuel value for aromatics, in volume percent

(B) The new high end of the valid range for olefins is determined from the following equation:

NOLELIM = OLEBASE + 3.0 volume percent

where

NOLELIM = The new high end of the valid range limit for olefins, in volume percent

OLEBASE = The seasonal baseline fuel value for olefins, in volume percent

(C) The new high end of the valid range for benzene is determined from the following equation:

NBENLIM = BENBASE + 0.5 volume percent

where

NBENLIM = The new high end of the valid range limit for benzene, in volume percent

BENBASE = The seasonal baseline fuel value for benzene, in volume percent

(D) The extension of the valid range is limited to the applicable summer or winter season in which the baseline fuel values for aromatics, olefins, and/or benzene exceed the high end of the valid range as described in paragraph (f)(2)(ii) of this section. Also, the extension of the valid range is limited to use by the refiner whose baseline value for aromatics, olefins, and/or benzene was higher than the valid range limits as described in paragraph (f)(2)(ii) of this section.

(E) Any extension of the Simple Model valid range limits is applicable only to the Simple Model. Likewise any extension of the Complex Model valid range limits is applicable only to the Complex Model.

(F) The valid range extensions calculated in paragraphs (f)(2)(ii)(A), (B), and (C) of this section are applicable to both the baseline fuel and target fuel for the purposes of determining the compliance status of conventional gasolines. The extended valid range limit represents the maximum value for that parameter above which fuels cannot be evaluated with the applicable compliance model.

(G) Under the Simple Model, baseline and compliance calculations shall subscribe to the following limitations:

(*1*) If the aromatics valid range has been extended per paragraph

(f)(2)(ii)(A) of this section, an aromatics value equal to the high end of the valid range specified in § 80.42(c)(1) shall be used for the purposes of calculating the exhaust benzene fraction.

(*2*) If the fuel benzene valid range has been extended per paragraph (f)(2)(ii)(C) of this section, a benzene value equal to the high end of the valid range specified in § 80.42(c)(1) shall be used for the purposes of calculating the exhaust benzene fraction.

(H) Under the Complex Model, baseline and compliance calculations shall subscribe to the following limitations:

(*1*) If the aromatics valid range has been extended per paragraph (f)(2)(ii)(A) of this section, an aromatics value equal to the high end of the valid range specified in § 80.45(f)(1)(ii) shall be used for the purposes of calculating emissions performances.

(*2*) If the olefins valid range has been extended per paragraph (f)(2)(ii)(B) of this section, an olefins value equal to the high end of the valid range specified in § 80.45(f)(1)(ii) shall be used for the target fuel for the purposes of calculating emissions performances.

(*3*) If the benzene valid range has been extended per paragraph (f)(2)(ii)(C) of this section, a benzene value equal to the high end of the valid range specified in § 80.45(f)(1)(ii) shall be used for the target fuel for the purposes of calculating emissions performances.

(iii) Facilities deemed closely integrated, per paragraph (e)(1) of this section, shall have a single set of annual average individual baseline emissions.

(iv) Aggregate baselines (per § 80.101(h)) must have the NO_X emissions of all refineries in the aggregate determined on the same basis, using either oxygenated or non-oxygenated baseline fuel parameters.

(3) *Geographic considerations requiring individual conventional gasoline compliance baselines.* (i) Anyone may petition EPA to establish separate baselines for refineries located in and providing conventional gasoline to an area with a limited gasoline distribution system if it can show that the area is experiencing increased toxics emissions due to an ozone nonattainment area opting into the reformulated gasoline program pursuant to section 211(k)(6) of the Act.

(ii) If EPA agrees with the finding of paragraph (f)(4)(i) of this section, it shall require that the baselines of such refineries be separate from refineries not located in the area.

(iii) If two (2) or more of a refiner's refineries are located in the geographic area of concern, the refiner may aggregate the baseline emissions and sulfur, olefin and T90 values of the refineries or have an individual baseline for one or more of the refineries, per paragraph (f)(3) of this section.

(4) *Baseline recalculations.* Aggregate baseline exhaust emissions (per § 80.90) and baseline sulfur, olefin and T90 values and aggregate baseline volumes shall be recalculated under the following circumstances:

(i) A refinery included in an aggregate baseline is entirely shutdown. If the shutdown refinery was part of an aggregate baseline, the aggregate baseline emissions, aggregate baseline sulfur, olefin and T90 values and aggregate volume shall be recalculated to account for the removal of the shutdown refinery's contributions to the aggregate baseline.

(ii) A refinery exchanges owners.

(A) All aggregate baselines affected by the exchange shall be recalculated to reflect the addition or subtraction of the baseline exhaust emissions, sulfur, olefin and T90 values and volumes of that refinery.

(B) The new owner may elect to establish an individual baseline for the refinery or to include it in an aggregate baseline.

(C) If the refinery was part of an aggregate of three or more refineries, the remaining refineries in the aggregate from which that refinery was removed will have a new aggregate baseline. If the refinery was part of an aggregate of only two refineries, the remaining refinery will have an individual baseline.

(g) *Inability to meet the requirements of this section.* If a refiner or importer is unable to comply with one or more of the requirements specified in paragraphs (a) through (f) of this section, it may, upon petition and approval, accommodate the lack of compliance in a reasonable, logical, technically sound

manner, considering the appropriateness of the alternative. A narrative of the situation, as well as any calculations and results determined, must be documented.

[59 FR 7860, Feb. 16, 1994, as amended at 59 FR 36966, July 20, 1994; 60 FR 6032, Feb. 1, 1995; 60 FR 40008, Aug. 4, 1995; 62 FR 9883, Mar. 4, 1997]

§ 80.92 Baseline auditor requirements.

(a) *General requirements.* (1) Each refiner or importer is required to have its individual baseline determination methodology, resulting baseline fuel parameter, volume and emissions values, and 1990–1993 blendstock-to-gasoline ratios (per § 80.102) verified by an auditor which meets the requirements described in this section. A refiner or importer which has the anti-dumping statutory baseline as its individual baseline is exempt from this requirement.

(2) An auditor may be an individual or organization, and may utilize contractors and subcontractors to assist in the verification of a baseline.

(3) If an auditor is an organization, one or more persons shall be designated as primary analyst(s). The primary analyst(s) shall meet the requirements described in paragraphs (c) (2) and (3) of this section and shall be responsible for the baseline audit per paragraph (f) of this section.

(b) *Independence.* The auditor, its contractors, subcontractors and their organizations shall be independent of the submitting organization. All of the criteria listed in paragraphs (b) (1) and (2) of this section must be met by every individual involved in substantive aspects of the baseline verification.

(1) *Previous employment criteria.* (i) None of the auditing personnel, including any contractor or subcontractor personnel, involved in the baseline verification for a refiner or importer shall have been employed by the refiner or importer at any time during the three (3) years preceding the date of hire of the auditor by the refiner or importer for baseline verification purposes.

(ii) Auditor personnel may have been a contractor or subcontractor to the refiner or importer, as long as all other criteria listed in this section are met.

(iii) Auditor personnel may also have developed the baseline of the refiner or importer whose baseline they are auditing, but not as an employee (per paragraph (b)(1)(i) of this section). Those involved only in the development of the baseline of the refiner or importer need not meet the requirements specified in this section.

(2) *Financial criteria.* Neither the primary analyst, nor the auditing organization nor any organization or individual which may be contracted or subcontracted to supply baseline verification expertise shall:

(i) Have received more than one quarter of its revenue from the refiner or importer during the year prior to the date of hire of the auditor by the refiner or importer for auditing purposes. Income received from the refiner or importer to develop the baseline being audited is excepted; nor

(ii) Have a total of more than 10 percent of its net worth with the refiner or importer; nor

(iii) Receive compensation for the audit which is dependent on the outcome of the audit.

(c) *Technical ability.* All of the following criteria must be met by the auditor in order to demonstrate its technical capability to perform the baseline audit:

(1) The auditor shall be technically capable of evaluating a baseline determination. It shall have personnel familiar with petroleum refining processes, including associated computational procedures, methods of product analysis and economics, and expertise in conducting the auditing process, including skills for effective data gathering and analysis.

(2) The primary analyst must understand all technical details of the entire baseline audit process.

(3)(i) The primary analyst shall have worked at least five (5) years in either refinery operations or as a consultant for the refining industry.

(ii) If one or more computer models designed for refinery planning and/or economic analysis are used in the verification of an individual baseline, the primary analyst must have at least three (3) years experience working with the model(s) utilized in the verification.

(iii) EPA may, upon petition, waive one or more of the requirements specified in paragraph (c)(3) of this section if the technical capability of the primary analyst is demonstrated to the satisfaction of the Director of the Office of Mobile Sources, or designee.

(d) *Auditor qualification statement.* A statement documenting the qualifications of the auditor, primary analyst(s), contractors, subcontractors and their organizations must be submitted to EPA (Fuel Studies and Standards Branch, Baseline Auditor, U.S. EPA, 2565 Plymouth Rd., Ann Arbor, MI 48105).

(1) *Timing.* (i) The auditor qualification statement may be submitted by the refiner or importer prior to baseline submission (per §80.93) or by a potential auditor at any time. The auditor will be deemed certified when all qualifications are met, to the satisfaction of the Director of the Office of Mobile Sources, or designee. If no response is received from EPA within 45 days of application or today's date, whichever is later, the auditor shall be deemed certified.

(ii) The auditor qualification statement may be submitted by the refiner or importer with its baseline submission (per §80.93). If the auditor does not meet the criteria specified in this section, the baseline submission will not be accepted.

(2) *Content.* The auditor qualification statement must contain all of the following information and may contain additional information which may aid EPA's review of the qualification statement:

(i) The name and address of each person and organization involved in substantive aspects of the baseline audit, including the auditor, primary analyst(s), others within the organization, and contractors and subcontractors;

(ii) The refiners and/or importers for which the auditor, its contractors and subcontractors and their organizations do not meet the independence criteria described in paragraph (b) of this section; and

(iii) The technical qualifications and experience of each person involved in the baseline audit, including a showing that the requirements described in paragraph (c) of this section are met.

(e) *Refiner and importer responsibility.* (1) Each refiner and importer required to have its baseline verified by an auditor (per paragraph (a)(1) of this section) is responsible for utilizing an auditor for baseline verification which meets the requirements specified in paragraphs (b) and (c) of this section.

(2) A refiner's or importer's baseline submission will not be accepted until it has been verified using an auditor which meets the requirements specified in paragraphs (b) and (c) of this section.

(f) *Auditor responsibilities.* (1) The auditor must verify that all baseline submission requirements are fulfilled. This includes, but is not limited to, the following:

(i) Verifying that all data is correctly accounted for;

(ii) Verifying that all calculations are performed correctly;

(iii) Verifying that all adjustments to the data and/or calculations to account for post-1990 data, work-in-progress, and/or extenuating or other circumstances, as allowed per §80.91, are valid and performed correctly.

(2) The primary analyst shall prepare and sign a statement, to be included in the baseline submission of the refiner or importer, stating that:

(i) He/she has thoroughly reviewed the sampling methodology and baseline calculations; and

(ii) To the best of his/her knowledge, the requirements and intentions of the rulemaking are met in the baseline determination; and

(iii) He/she agrees with the final baseline parameter, volume and emission values listed in the baseline submission.

(3) The auditor may be subject to debarment under U.S.C. 1001 if it displays gross incompetency, intentionally commits an error in the verification process or misrepresents itself or information in the baseline verification.

§80.93 Individual baseline submission and approval.

(a) *Submission timing.* (1) Each refiner, blender or importer shall submit two copies of its individual baseline to EPA (Fuel Studies and Standards Branch, Baseline Submission, U.S. EPA, 2565

Plymouth Rd., Ann Arbor, MI 48105) not later than June 1, 1994.

(2) If a refiner must collect data after December 15, 1993 (per § 80.91(d)(2)), it shall submit two copies of its individual baseline to EPA (per § 80.93(a)(1)) by September 1, 1994.

(3)(i) All petitions required for baseline adjustments or methodology deviations will be approved or disapproved by the Director of the Office of Mobile Sources, or designee. All instances where a ''showing'' or other proof is required are also subject to approval by the Director of the Office of Mobile Sources, or designee.

(ii) Petitions, ''showings,'' and other associated proof may be submitted to EPA prior to submittal of the individual baseline (per paragraphs (a)(1) and (a)(2) of this section). EPA will attempt to review and approve, disapprove or otherwise comment on the petition, etc., prior to the deadline for baseline submittal.

(iii) In the event that EPA does not comment on the petition prior to the deadline for baseline submittal, the refiner or importer must still comply with the applicable baseline submittal deadline.

(iv) Petitions submitted prior to the deadline for baseline submittals shall be submitted to the EPA at the following address: Fuels Studies and Standards Branch, Baseline Petition, U.S. EPA, 2565 Plymouth Road, Ann Arbor, Michigan 48105.

(4) If a baseline recalculation is required per § 80.91(f), documentation and recalculation of all affected baselines shall be submitted to EPA within 30 days of the previous baseline(s) becoming inaccurate due to the circumstances outlined in § 80.91(f).

(b) *Submission content.* (1) Individual baseline submissions shall include, at minimum, the information specified in this paragraph (b).

(i) During its review and evaluation of the baseline submission, EPA may require a refiner or importer to submit additional information in support of the baseline determination.

(ii) Additional information which may assist EPA during its review and evaluation of the baseline may be included at the submitter's discretion.

(2) Administrative information shall include:

(i) Name and business address of the refiner or importer;

(ii) Name, business address and business phone number of the company contact;

(iii) Address and physical location of each refinery, terminal or import facility;

(iv) Address and physical location where documents which are supportive of the baseline determination for each facility are kept;

(3) The chief executive officer statement shall be:

(i) A statement signed by the chief executive officer of the company, or designee, which states that:

(A) The company is complying with the requirements as a refiner, blender or importer, as appropriate;

(B) The data used in the baseline determination is the extent of the data available for the determination of all required baseline fuel parameters;

(C) All calculations and procedures followed per §§ 80.90 through 80.93 have been done correctly;

(D) Proper adjustments have been made to the data or in the calculations, as applicable;

(E) The requirements and intentions of the rulemaking have been met in determining the baseline fuel parameters; and

(F) The baseline fuel parameter values determined for each facility represent that facility's 1990 gasoline to the fullest extent possible.

(ii) A refiner or importer which is permitted to utilize the parameter values specified in § 80.91(c)(5), and does so, shall submit a statement signed by the chief executive officer of the company, or designee, indicating that insufficient data exist for a baseline determination by the types of data allowed for that entity, as specified in § 80.91.

(4) The auditor-related requirements are:

(i) Name, address, telephone number and date of hire of each auditor hired for baseline verification, whether or not the auditor was retained through the baseline approval process.

(ii) Identification of the auditor responsible for the verification. A copy of this auditor's qualification statement,

per § 80.92, must be included if the auditor has not been approved by EPA, per § 80.92;

(iii) Indication of the primary analyst(s) involved in each refinery's baseline verification; and

(iv) The signed auditor verification statement, per § 80.92.

(5) The following baseline information for each refinery, refiner or importer, as applicable, shall be provided:

(i) Individual baseline fuel parameter values, on an oxygenated and non-oxygenated basis, and on a summer and winter basis, per § 80.91;

(ii) Individual baseline exhaust emissions shall be shown separately, on a summer, winter and annual average basis (per § 80.90) as follows:

(A) Simple model exhaust benzene emissions;

(B) Complex model exhaust benzene emissions;

(C) Complex model exhaust toxics emissions, for Phase I;

(D) Complex model exhaust NO_X emissions, for Phase I, using oxygenated individual baseline fuel parameters;

(E) Complex model exhaust NO_X emissions, for Phase I, using non-oxygenated individual baseline fuel parameters;

(F) Complex model exhaust toxics emissions, for Phase II;

(G) Complex model exhaust NO_X emissions, for Phase II, using oxygenated individual baseline fuel parameters; and

(H) Complex model exhaust NO_X emissions, for Phase II, using non-oxygenated individual baseline fuel parameters;

(iii) Individual 1990 baseline gasoline volumes, per § 80.91, shall be shown separately on a summer, winter and annual average basis; and

(iv) Blendstock-to-gasoline ratios for each calendar year 1990 through to 1993, per § 80.102.

(6) Confidential business information.

(i) Upon approval of an individual baseline, EPA will publish the individual annualized baseline exhaust emissions, on an annual average basis, specified in paragraph (b)(5)(ii) of this section. Such individual baseline exhaust emissions shall not be considered confidential. In addition, the reporting information required under § 80.75(b)(2)(ii) (D), (G) and (J), and § 80.105(a)(4)(i) (E), (H) and (K) shall not be considered confidential.

(ii) Information in the baseline submission which the submitter desires to be considered confidential business information (per 40 CFR part 2, subpart B) must be clearly identified. If no claim of confidentiality accompanies a submission when it is received by EPA, the information may be made available to the public without further notice to the submitter pursuant to the provisions of 40 CFR part 2, subpart B.

(7) Information related to baseline determination as specified in § 80.91 and paragraph (c) of this section.

(c) *Additional baseline submission requirements when Method 1-, 2- and/or 3-type data is utilized.* All requirements of this paragraph shall be reported separately for each facility, unless the facilities are closely integrated, per § 80.91.

(1) *General.* The following information shall be provided:

(i) The number of months in 1990 during which the facility was operating;

(ii) 1990 summer gasoline production volume, per § 80.91, total and by grade, for all gasoline produced but not exported;

(iii) 1990 winter gasoline production volume, per § 80.91, total and by grade, for all gasoline produced, excluding gasoline exported; and

(iv) Whether this facility is actually two facilities which are closely integrated, per § 80.91.

(2) *Baseline values.* The following shall be included for each fuel parameter for which a baseline value is required, per § 80.91:

(i) Narrative of the development of the baseline value of the fuel parameter, including discussion of the sampling and calculation methodologies, technical judgment used, effects of petition results on calculated values, and any additional information which may assist EPA in its review of the baseline;

(ii) Identification of the data-type(s), per § 80.91, used in the determination of a given fuel parameter;

(iii) Identification of test method. If not per § 80.46, include a narrative, explain differences and describing adequacy, per § 80.91;

(iv) Documentation that the minimum sampling requirements per § 80.91 have been met;

(v) Petition and narrative, if needed, for use of less than the minimum required data, per § 80.91;

(vi) Identification of instances of sample compositing per § 80.91;

(vii) Identification of streams for which one or more parameter values were deemed negligible per § 80.91; and

(viii) Discussion of the calculation of oxygenated or non-oxygenated fuel parameter values from non-oxygenated or oxygenated values, respectively, per § 80.91.

(3) *Method 1.* If Method 1-type data is utilized in the baseline determination, the following information on 1990 batches of gasoline, or shipments if not batch blended, are required by grade shall be provided:

(i) First and last sampling dates;

(ii) The following shall be indicated separately on a summer and winter basis, by month:

(A) Number of months sampled;

(B) Number of 1990 batches, or shipments if not batch blended;

(C) Total volume of all batches or shipments;

(D) Number of batches or shipments sampled;

(E) Total volume of all batches or shipments sampled;

(F) Baseline fuel parameter value, per § 80.91; and

(iii) A showing that data was available on every batch of 1990 gasoline, if applicable, per § 80.91 (b)(3) or (b)(4).

(4) *Method 2.* If Method 2-type data is utilized in the baseline determination, the following information on each type of 1990 blendstock used in the refinery's gasoline are required, by blendstock type shall be provided:

(i) First and last sampling dates; and

(ii) The following shall be indicated separately on a summer and winter basis, by month:

(A) Number of months sampled;

(B) Each type of blendstock used in 1990 gasoline and total number of blendstocks. Include all blendstocks produced, purchased or otherwise received which were blended to produce gasoline within the facility. Identify all blendstocks not produced in the facility but used in the facility's 1990 gasoline;

(C) Total volume of each blendstock used in gasoline in 1990;

(D) Identification of blendstock streams as batch or continuous;

(E) Number of blendstock samples from continuous blendstock streams;

(F) Number of blendstock samples from batch processes, including volume of each batch sampled; and

(G) Baseline fuel parameter value, per § 80.91.

(5) *Method 3, blendstock data.* The following information on each type of post-1990 gasoline blendstock used in the refinery's gasoline are required, by blendstock type shall be provided:

(i) First and last sampling dates;

(ii) The following shall be indicated separately on a summer and winter basis, by month:

(A) Number of post-1990 months sampled;

(B) Each type of blendstock used in 1990 gasoline and total number of blendstocks. Include all blendstocks produced, purchased or otherwise received which were blended to produce gasoline within the facility. Identify all blendstocks not produced in the facility but used in the facility's 1990 gasoline;

(C) Total volume of each blendstock used in gasoline in 1990;

(D) Identification of post-1990 blendstock streams as batch or continuous;

(E) Number of post-1990 blendstock samples from continuous blendstock streams;

(F) Number of post-1990 blendstock samples from batch processes, including volume of each batch sampled; and

(G) Baseline fuel parameter value, per § 80.91; and

(iii) Support documentation showing that the criteria of § 80.91 for using Method 3-type blendstock data are met.

(6) *Method 3, post-1990 gasoline data.* The following information on post-1990 batches of gasoline, or shipments if not batch blended, are required by grade:

(i) First and last sampling dates;

(ii) The following shall be indicated separately for summer and winter production, by month:

(A) Number of post-1990 months sampled;

(B) Number of post-1990 batches, or shipments if not batch blended;

(C) Total volume of all post-1990 batches or shipments;

(D) Number of post-1990 batches or shipments sampled;

(E) Volume of each post-1990 batch or shipment sampled; and

(F) Baseline fuel parameter value, per §80.91; and

(iii) Support documentation showing that the criteria of §80.91 for using post-1990 gasoline data are met.

(7) *Work-in-progress (WIP).* All of the following must be included in support of a WIP adjustment (per §80.91(e)(5)):

(i) Petition including identification of the specific baseline emission(s) or parameter for which the WIP adjustment is desired;

(ii) Showing that all WIP criteria, per §80.91(e)(5), are met;

(iii) Unadjusted and adjusted baseline fuel parameters, emissions and volume for the facility; and

(iv) Narrative, per §80.91 (e)(5).

(8) *Extenuating circumstances.* All of the following must be included in support of an extenuating circumstance adjustment (per §80.91 (e)(6) through (e)(7)):

(i) Petition including identification of the allowable circumstance, per §80.91 (e)(6) through (e)(7);

(ii) Showing that all applicable criteria, per §80.91 (e)(6) through (e)(7), are met;

(iii) Unadjusted and adjusted baseline fuel parameters, emissions and volume for the facility; and

(iv) Narrative, per §80.91.

(9) *Other baseline information.* Narrative discussing any aspects of the baseline determination not already indicated per the requirements of paragraph (c)(8) of this section shall be provided.

(10) *Refinery information.* The following information, on a summer or winter basis, shall be provided:

(i) Refinery block flow diagram, showing principal refining units;

(ii) Principal refining unit charge rates and capacities;

(iii) Crude types utilized (names, gravities, and sulfur content) and crude charge rates; and

(iv) Information on the following units, if utilized in the refinery:

(A) Catalytic Cracking Unit: conversion, unit yields, gasoline fuel parameter values (per §80.91(a)(2));

(B) Hydrocracking Unit: unit yields, gasoline fuel parameter values (per §80.91(a)(2));

(C) Catalytic Reformer: unit yields, severities;

(D) Bottoms Processing Units (including, but not limited to, coking, extraction and hydrogen processing): gasoline stream yields;

(E) Yield structures for other principal units in the refinery (including but not limited to Alkylation, Polymerization, Isomerization, Etherification, Steam Cracking).

[59 FR 7860, Feb. 16, 1994, as amended at 59 FR 36968, July 20, 1994; 60 FR 65575, Dec. 20, 1995]

§§80.94—80.100 [Reserved]

§80.101 Standards applicable to refiners and importers.

Any refiner or importer of conventional gasoline shall meet the standards specified in this section over the specified averaging period, beginning on January 1, 1995.

(a) *Averaging period.* The averaging period for the standards specified in this section shall be January 1 through December 31.

(b) *Conventional gasoline compliance standards*—(1) *Simple model standards.* The simple model standards are the following:

(i) Annual average exhaust benzene emissions, calculated according to paragraph (g)(1)(i) of this section, shall not exceed the refiner's or importer's compliance baseline for exhaust benzene emissions;

(ii) Annual average levels of sulfur shall not exceed 125% of the refiner's or importer's compliance baseline for sulfur;

(iii) Annual average levels of olefins shall not exceed 125% of the refiner's or importer's compliance baseline for olefins; and

(iv) Annual average values of T–90 shall not exceed 125% of the refiner's or

importer's compliance baseline for T–90.

(2) *Optional complex model standards.* Annual average levels of exhaust benzene emissions, weighted by volume for each batch and calculated using the applicable complex model under § 80.45, shall not exceed the refiner's or importer's 1990 average exhaust benzene emissions.

(3) *Complex model standards.* Annual average levels of exhaust toxics emissions and NO_X emissions, weighted by volume for each batch and calculated using the applicable complex model under § 80.45, shall not exceed the refiner's or importer's 1990 average exhaust toxics emissions and NO_X emissions, respectively.

(c) *Applicability of standards.* (1) For each averaging period prior to January 1, 1998, a refiner or importer shall be subject to either the Simple Model or Optional Complex Model Standards, at their option, except that any refiner or importer shall be subject to:

(i) The Simple Model Standards if the refiner or importer uses the Simple Model Standards for reformulated gasoline; or

(ii) The Optional Complex Model Standards if the refiner or importer used the Complex Model Standards for reformulated gasoline.

(2) Beginning January 1, 1998, each refiner and importer shall be subject to the Complex Model Standards for each averaging period.

(d) *Product to which standards apply.* Any refiner for each refinery, or any importer, shall include in its compliance calculations:

(1) Any conventional gasoline produced or imported during the averaging period;

(2) Any non-gasoline petroleum products that are produced or imported and sold or transferred from the refinery or group of refineries or importer during the averaging period, if required pursuant to § 80.102(e)(2), unless the refiner or importer is able to establish in the form of documentation that the petroleum products were used for a purpose other than the production of gasoline within the United States;

(3) Any gasoline blending stock produced or imported during the averaging period which becomes conventional gasoline solely upon the addition of oxygenate;

(4)(i) Any oxygenate that is added to conventional gasoline, or gasoline blending stock as described in paragraph (d)(3) of this section, where such gasoline or gasoline blending stock is produced or imported during the averaging period;

(ii) In the case of oxygenate that is added at a point downstream of the refinery or import facility, the oxygenate may be included only if the refiner or importer can establish the oxygenate was in fact added to the gasoline or gasoline blendstock produced, by showing that the oxygenate was added by:

(A) The refiner or importer; or

(B) By a person other than the refiner or importer, provided that the refiner or importer:

(1) Has a contract with the oxygenate blender that specifies procedures to be followed by the oxygenate blender that are reasonably calculated to ensure blending with the amount and type of oxygenate claimed by the refiner or importer; and

(2) Monitors the oxygenate blending operation to ensure the volume and type of oxygenate claimed by the refiner or importer is correct, through periodic audits of the oxygenate blender designed to assess whether the overall volumes and type of oxygenate purchased and used by the oxygenate blender are consistent with the oxygenate claimed by the refiner or importer and that this oxygenate was blended with the refiner's or importer's gasoline or blending stock, periodic sampling and testing of the gasoline produced subsequent to oxygenate blending, and periodic inspections to ensure the contractual requirements imposed by the refiner or importer on the oxygenate blender are being met.

(e) *Product to which standards do not apply.* Any refiner for each refinery, or any importer, shall exclude from its compliance calculations:

(1) Gasoline that was not produced at the refinery or was not imported by the importer;

(2) Blendstocks that have been included in another refiner's compliance calculations, pursuant to § 80.102(e)(2) or otherwise;

(3) California gasoline as defined in § 80.81(a)(2); and

(4) Gasoline that is exported.

(f) *Compliance baseline determinations.* (1) In the case of any refiner or importer for whom an individual baseline has been established under § 80.91, the individual baseline for each parameter or emissions performance shall be the compliance baseline for that refiner or importer.

(2) In the case of any refiner or importer for whom the anti-dumping statutory baseline applies under § 80.91, the anti-dumping statutory baseline for each parameter or emissions performance shall be the compliance baseline for that refiner or importer.

(3) In the case of a party that is both a refiner and an importer, and for whom an individual 1990 baseline has not been established for the imported product under § 80.91(b)(4), the compliance baseline for the imported product shall be the 1990 volume weighted average of all of the refiner's individual refinery baselines.

(4) Any compliance baseline under paragraph (f) (1) or (3) of this section shall be adjusted for each averaging period as follows:

(i) If the total volume of the conventional gasoline, RBOB, reformulated gasoline, and California gasoline as defined in § 80.81(a)(2), produced or imported by any refiner or importer during the averaging period is equal to or less than that refiner's or importer's 1990 baseline volume as determined under § 80.91(f)(1), the compliance baseline for each parameter or emissions performance shall be that refiner's or importer's individual 1990 baseline; or

(ii) If the total volume of the conventional gasoline, RBOB, reformulated gasoline, and California gasoline as defined in § 80.81(a)(2), produced or imported by any refiner or importer during the averaging period is greater than that refiner's or importer's 1990 baseline volume as determined under § 80.91(f)(1), the compliance baseline for each parameter or emissions performance shall be calculated according to the following formula:

$$CB_i = \left(B_i * \left(\frac{V_{1990}}{V_a}\right)\right) + \left(DB_i * \left(1 - \frac{V_{1990}}{V_a}\right)\right)$$

where

CB_i = the compliance baseline value for parameter or emissions performance i

B_i = the refiner's or importer's individual baseline value for parameter or emissions performance i calculated according to the methodology in § 80.91

DB_i = the anti-dumping statutory baseline value for parameter or emissions performance i, as specified at § 80.91(c)(5)(iii) or (c)(5)(iv), respectively

V_{1990} = the 1990 baseline volume as determined under § 80.91(f)(1)

V_a = the total volume of reformulated gasoline, conventional gasoline, RBOB, and California gasoline as defined in § 80.81(a)(2) produced or imported by a refiner or importer during the averaging period

(g) *Compliance calculations*—(1)(i) *Simple model calculations.* In the case of any refiner or importer subject to an individual refinery baseline, the annual average value for each parameter or emissions performance during the averaging period, calculated according to the following methodologies, shall be less than or equal to the refiner's or importer's standard under paragraph (b) of this section for that parameter.

(A) The average value for sulfur, T–90, olefin, benzene, and aromatics for an averaging period shall be calculated as follows:

$$APARM = \left(\frac{\sum_{i=1}^{n}\left(V_i \times PARM_i \times SG_i\right)}{\sum_{i=1}^{n} V_i \times SG_i}\right)$$

where

APARM = the average value for the parameter being evaluated

Vi = the volume of conventional gasoline or other products included under paragraph (d) of this section, in batch i

$PARM_i$ = the value of the parameter being evaluated for batch i as determined in accordance with the test methods specified in § 80.46

n = the number of batches of conventional gasoline and other products included under paragraph (d) of this section produced or imported during the averaging period

SG_i = specific gravity of batch i (only applicable for sulfur)

(B) Exhaust benzene emissions under the Simple Model for an averaging period are calculated as follows:

$$EXHBEN = 1.884 + (0.949 \times BZ) + (0.113 \times (AR - BZ))$$

where

EXHBEN = the average exhaust benzene emissions for the averaging period

BZ = the average benzene content for the averaging period, calculated per paragraph (g)(1)(i)(A) of this section

AR = the average aromatics content for the averaging period, calculated per paragraph (g)(1)(i)(A) of this section

(ii) *Complex model calculations.* Exhaust benzene, exhaust toxics, and exhaust NO_X emissions performance for each batch shall be calculated in accordance with the applicable model under § 80.45.

(2) In the case of any refiner or importer subject to the anti-dumping statutory baseline, the refiner or importer shall determine compliance using the following methodology:

(i) Calculate the compliance total for the averaging period for sulfur, T–90, olefins, exhaust benzene emissions, exhaust toxics and exhaust NO_X emissions, as applicable, based upon the anti-dumping statutory baseline value for that parameter using the formula specified at § 80.67.

(ii) Calculate the actual total for the averaging period for sulfur, T–90, olefins, exhaust benzene emissions, exhaust toxics and exhaust NO_X emissions, as applicable, based upon the value of the parameter for each batch of conventional gasoline and gasoline blendstocks, if applicable, using the formula specified at § 80.67.

(iii) The actual total for exhaust benzene emissions, exhaust toxics and exhaust NO_X emissions, shall not exceed the compliance total, and the actual totals for sulfur, olefins and T–90 shall not exceed 125% of the compliance totals, as required under the applicable model.

(3) In the case of any batch of gasoline that is produced by combining blendstock with gasoline, where the gasoline portion of the blend is not included in the compliance calculation, the emissions performance for exhaust benzene, exhaust toxics, and exhaust NO_X emissions for the blendstock shall be:

(i)(A) The emissions performance of a gasoline that would be produced by combining the blendstock used at the volume percentage used, with a gasoline that has properties that are equal to the refiner's or importer's anti-dumping baseline; minus

(B) The emissions performance of a gasoline that has properties that are equal to the refiner's or importer's anti-dumping baseline.

(ii) The volume weighted net emissions performance for exhaust benzene, exhaust toxics, and exhaust NO_X emissions, as applicable, for all batches of gasoline that are produced during the averaging period by combining blendstock with gasoline, shall be equal to or less than zero.

(iii) The value of those properties measured on a weight percent or ppm basis shall be adjusted for the specific gravity of the gasoline and blendstocks used for the purposes of calculations under paragraph (g)(3) of this section.

(iv) For blends which contain greater than 1.50 volume percent ethanol, the RVP of the final blend shall be 1.0 psi greater than the RVP of the base gasoline and blendstocks without the ethanol for the purposes of calculations under paragraph (g)(3) of this section.

(v) For blends containing less than 1.50 volume percent ethanol, the RVP of the base gasoline and blendstocks

without ethanol shall be used for the purposes of calculations under paragraph (g)(3) of this section.

(4) Compliance calculations under this subpart E shall be based on computations to the same degree of accuracy that are specified in establishing individual baselines under § 80.91.

(5) The emissions performance of gasoline that has an RVP that is equal to or less than the RVP required under § 80.27 (''summer gasoline'') shall be determined using the applicable summer complex model under § 80.45.

(6) The emissions performance of gasoline that has an RVP greater than the RVP required under § 80.27 (''winter gasoline'') shall be determined using the applicable winter complex model under § 80.45, using an RVP of 8.7 psi for compliance calculation purposes under this subpart E.

(7)(i) For the 1998 averaging period any refiner or importer may elect to determine compliance with the requirement for exhaust NO_X emissions performance either with or without the inclusion of oxygenates in its compliance calculations, in accordance with § 80.91(e)(4), provided that the baseline exhaust NO_X emissions performance is calculated using the same with- or without-oxygen approach.

(ii)(A) Any refiner or importer must use the with- or without-oxygen approach elected under paragraph (g)(7)(i) of this section for all subsequent averaging periods; except that

(B) In the case of any refiner or importer who elects to determines compliance for the calendar year 1998 averaging period without the inclusion of oxygenates, such refiner or importer may elect to include oxygenates in its compliance calculations for the 1999 averaging period.

(iii) Any refiner or importer who elects to use the with-oxygen approach under paragraph (g)(7)(ii)(B) of this section must use this approach for all subsequent averaging periods.

(h) *Refinery grouping for determining compliance.* (1) Any refiner that operates more than one refinery may:

(i) Elect to achieve compliance individually for the refineries; or

(ii) Elect to achieve compliance on an aggregate basis for a group, or for groups, of refineries, some of which may be individual refineries; provided that

(iii) Compliance is achieved for each refinery separately or as part of a group; and

(iv) The data for any refinery is included only in one compliance calculation.

(2) Any election by a refiner to group refineries under paragraph (h)(1) of this section shall:

(i) Be made as part of the report for the 1995 averaging period required by § 80.105;

(ii) Apply for the 1995 averaging period and for each subsequent averaging period, and may not thereafter be changed; and

(iii) Apply for purposes of the blendstock tracking and accounting provisions under § 80.102.

(3)(i) Any standards under this section shall apply, and compliance calculations shall be made, separately for each refinery or refinery group; except that

(ii) Any refiner that produces conventional gasoline for distribution to a specified geographic area which is the subject of a petition approved by EPA pursuant to § 80.91(f)(3) shall achieve compliance separately for gasoline supplied to such specified geographic area.

(i) *Sampling and testing.* (1) Any refiner or importer shall for each batch of conventional gasoline, and other products if included in paragraph (d) of this section:

(i)(A) Determine the value of each of the properties required for determining compliance with the standards that are applicable to the refiner or importer, by collecting and analyzing a representative sample of gasoline or blendstock taken from the batch, using the methodologies specified in § 80.46; except that

(B) Any refiner that produces gasoline by combining blendstock with gasoline that has been included in the compliance calculations of another refiner or of an importer may for such gasoline meet this sampling and testing requirement by collecting and analyzing a representative sample of the blendstock used subsequent to each receipt of such blendstock if the compliance calculation method specified in paragraph (g)(3) of this section is used.

(ii) Assign a number to the batch (the ''batch number''), as specified in § 80.65(d)(3);

(2) For the purposes of meeting the sampling and testing requirements under paragraph (i)(1) of this section, any refiner or importer may, prior to analysis, combine samples of gasoline collected from more than one batch of gasoline or blendstock (''composite sample''), and treat such composite sample as one batch of gasoline or blendstock provided that the refiner or importer:

(i) Meets each of the requirements specified in § 80.91(d)(4)(iii) for the samples contained in the composite sample;

(ii) Combines samples of gasoline that are produced or imported over a period no longer than one month;

(iii) Uses the total of the volumes of the batches of gasoline that comprise the composite sample, and the results of the analyses of the composite sample, for purposes of compliance calculations under paragraph (g) of this section; and

(iv) Does not combine summer and winter gasoline, as specified under paragraphs (g) (5) and (6) of this section, in a composite sample.

[59 FR 7860, Feb. 16, 1994, as amended at 59 FR 36968, July 20, 1994; 60 FR 40008, Aug. 4, 1995; 62 FR 9884, Mar. 4, 1997]

§ 80.102 Controls applicable to blendstocks.

(a) For the purposes of this subpart E:

(1) All of the following petroleum products that are produced by a refiner or imported by an importer shall be considered ''applicable blendstocks'':

(i) Reformate;

(ii) Light coker naphtha;

(iii) FCC naphtha;

(iv) Benzene/toluene/xylene;

(v) Pyrolysis gas;

(vi) Aromatics;

(vii) Polygasoline; and

(viii) Dimate; and

(2) Any gasoline blendstock with properties such that, if oxygenate only is added to the blendstock the resulting blend meets the definition of gasoline under § 80.2(c), shall be considered gasoline.

(b)(1) Any refiner or importer of conventional gasoline or blendstocks shall determine the baseline blendstock-to-gasoline ratio for each calendar year 1990 through 1993 according to the following formula:

$$BG_{by} = \frac{V_{bs}}{V_g}$$

Where:

BG_{by}=Blendstock-to-gasoline ratio for base year

V_{bs} = Volume of applicable blendstock produced or imported and transferred to others during the calendar year, and used to produce gasoline

V_g=Volume of gasoline produced or imported during the calendar year

(2)(i) Only those volumes of applicable blendstocks for which the refiner is able to demonstrate the blendstock was used in the production of gasoline may be included in baseline blendstock-to-gasoline ratios under paragraph (b)(1) of this section.

(ii) The baseline volume data for applicable blendstocks and gasoline shall be confirmed through the baseline audit requirements specified in § 80.92 and submitted in accordance with the requirements of § 80.93.

(c) Any refiner or importer shall calculate the baseline cumulative blendstock-to-gasoline ratio according to the following formula:

$$BGC_{base} = \frac{\sum_{i=1}^{n} V_{bs,i}}{\sum_{i=1}^{n} V_{g,i}}$$

Where:

BGC_{base}=Baseline cumulative blendstock-to-gasoline ratio

$V_{bs,i}$=Volume of applicable blendstock produced or imported and transferred to others during calendar year i

$V_{g,i}$=Volume of gasoline produced or imported during calendar year i

i=each year, 1990 through 1993, for which a blendstock-to-gasoline ratio is calculated under paragraph (b) of this section

(d)(1) For each averaging period, any refiner or importer shall:

(i) Determine the averaging period blendstock-to-gasoline ratio according to the following formula:

$$BG_a = \frac{V_{bs}}{V_g}$$

Where:

BG_a=Blendstock-to-gasoline ratio for the current averaging period

V_{bs} = Volume of applicable blendstock produced or imported and subsequently transferred to others during the averaging period

V_g = Volume of conventional gasoline, reformulated gasoline and RBOB produced or imported during the averaging period, excluding California gasoline as defined in § 80.81(a)(2)

(ii) For each averaging period until January 1, 1998, calculate the peak year blendstock-to-gasoline ratio percentage change according to the following formula:

$$PC_p = \left(\frac{BG_a - BG_p}{BG_p}\right) \times 100$$

Where:

PC_p=Peak year blendstock-to-gasoline ratio percentage change

BG_a=Blendstock-to-gasoline ratio for the averaging period calculated under paragraph (d)(1)(i) of this section

BG_p=Largest one year blendstock-to-gasoline ratio calculated under paragraph (b) of this section

(2) Beginning on January 1, 1998, for each averaging period any refiner or importer shall:

(i) Determine the running cumulative compliance period blendstock-to-gasoline ratio according to the following formula:

$$BGC_{comp} = \frac{\sum_{i=1}^{n} V_{bs,i}}{\sum_{i=1}^{n} V_{g,i}}$$

Where:

BGC_{comp}=Running cumulative compliance period blendstock-to-gasoline ratio

$V_{bs,i}$=Volume of applicable blendstock produced or imported and transferred to others during averaging period i

$V_{g,i}$ = Volume of conventional gasoline, reformulated gasoline and RBOB produced or imported during averaging period i, excluding California gasoline as defined in § 80.81(a)(2)

i=The current averaging period, and each of the three immediately preceding averaging periods

(ii) Calculate the cumulative blendstock-to-gasoline ratio percentage change according to the following formula:

$$PC_c = \left(\frac{BGC_{comp} - BGC_{base}}{BGC_{base}}\right) \times 100$$

Where:

PC_c=Cumulative blendstock-to-gasoline ratio percentage change

BGC_{comp}=Running cumulative compliance period blendstock-to-gasoline ratio as determined in paragraph (d)(2)(i) of this section

BGC_{base}=Baseline cumulative blendstock-to-gasoline ratio calculated under paragraph (c) of this section

(3) For purposes of this paragraph (d), all applicable blendstocks produced or imported shall be included, except those for which the refiner or importer has sufficient evidence in the form of documentation that the blendstocks were:

(i) Exported;

(ii) Used for other than gasoline blending purposes;

(iii) Transferred to a refiner that used the blendstock as a ''feedstock'' in a refining process during which the blendstock underwent a substantial chemical or physical transformation; or

(iv) Transferred between refineries which have been grouped pursuant to § 80.101(h) by a refiner for the purpose of determining compliance under this subpart; or

(v) Used to produce California gasoline as defined in § 80.81(a)(2).

(e)(1) Any refiner or importer shall have exceeded the blendstock-to-gasoline ratio percentage change threshold if:

(i) The peak year blendstock-to-gasoline ratio percentage change calculated under paragraph (d)(1)(ii) of this section is more than ten; or

(ii) Beginning on January 1, 1998, the cumulative blendstock-to-gasoline ratio percentage change calculated under paragraph (d)(2)(ii) of this section is more than ten.

(2) Any refiner or importer that exceeds the blendstock-to-gasoline ratio percentage change threshold shall, without further notification:

(i) Include all blendstocks produced or imported and transferred to others in its compliance calculations under § 80.101(g) for two averaging periods beginning on January 1 of the averaging period subsequent to the averaging period when the exceedance occurs;

(ii) Provide transfer documents to the recipient of such blendstock that contain the language specified at § 80. 106(b); and

(iii) Transfer such blendstock in a manner such that the ultimate blender of such blendstocks has a reasonable basis to know that such blendstock has been accounted for.

(3) Any refiner or importer that has previously exceeded the blendstock-to-gasoline ratio percentage change threshold, and subsequently exceeds the threshold for an averaging period and is not granted a waiver pursuant to paragraph (f)(2)(i) of this section, shall, without further notification, meet the requirements specified in paragraphs (e)(2) (i) through (iii) of this section for four averaging periods, beginning on January 1 of the averaging period following the averaging period when the subsequent exceedance occurs.

(f)(1) The refiner or importer blendstock accounting requirements specified under paragraph (e) of this section shall not apply in the case of any refiner or importer:

(i) Whose 1990 baseline value for each regulated fuel property and emission performance, as determined in accordance with §§ 80.91 and 80.92, is less stringent than the anti-dumping statutory baseline value for that parameter or emissions performance;

(ii) Whose averaging period blendstock-to-gasoline ratio, calculated according to paragraph (d)(1)(i) of this section, is equal to or less than .0300; or

(iii) Who obtains a waiver from EPA, provided that a petition for such a waiver is filed no later than fifteen days following the end of the averaging period for which the blendstock-to-gasoline ratio percentage change threshold is exceeded.

(2)(i) EPA may grant the waiver referred to in paragraph (f)(1)(iii) of this section if the level of blendstock production was the result of extreme or unusual circumstances (e.g., a natural disaster or act of God) which clearly are outside the control of the refiner or importer, and which could not have been avoided by the exercise of prudence, diligence, and due care.

(ii) Any petition filed under paragraph (f) of this section shall include information which describes the extreme or unusual circumstance which caused the increased volume of blendstock produced or imported, the steps taken to avoid the circumstance, and the steps taken to remedy or mitigate the effect of the circumstance.

(g) Notwithstanding the requirements of paragraphs (a) through (f) of this section, any refiner or importer that transfers applicable blendstock to another refiner or importer with a less stringent baseline requirement, either directly or indirectly, for the purpose of evading a more stringent baseline requirement, shall include such blendstock(s) in determining compliance with the applicable requirements of this subpart.

[59 FR 7860, Feb. 16, 1994, as amended at 59 FR 36969, July 20, 1994]

§ 80.103 Registration of refiners and importers.

Any refiner or importer of conventional gasoline must register with the Administrator in accordance with the provisions specified at § 80.76.

§ 80.104 Recordkeeping requirements.

Any refiner or importer shall maintain records containing the information as required by this section.

(a) Beginning in 1995, for each averaging period:

(1) Documents containing the information specified in paragraph (a)(2) of this section shall be obtained for:

(i) Each batch of conventional gasoline, and blendstock if blendstock accounting is required under §80.102(e)(2); or

(ii) Each batch of blendstock received in the case of any refiner that determines compliance on the basis of blendstocks properties under §80.101(g)(3).

(2)(i) The results of tests performed in accordance with §80.101(i);

(ii) The volume of the batch;

(iii) The batch number;

(iv) The date of production, importation or receipt;

(v) The designation regarding whether the batch is summer or winter gasoline;

(vi) The product transfer documents for any conventional gasoline produced or imported;

(vii) The product transfer documents for any conventional gasoline received;

(viii) For any gasoline blendstocks received by or transferred from a refiner or importer, documents that reflect:

(A) The identification of the product;

(B) The date the product was transferred; and

(C) The volume of product;

(ix) In the case of any refinery-produced or imported products listed in §80.102(a) that are excluded under §80.102(d)(3), documents which demonstrate that basis for exclusion; and

(x) In the case of oxygenate that is added by a person other than the refiner or importer under §80.101(d)(4)(ii)(B), documents that support the volume of oxygenate claimed by the refiner or importer, including the contract with the oxygenate blender and records relating to the audits, sampling and testing, and inspections of the oxygenate blender operation.

(b) Any refiner or importer shall retain the documents required in this section for a period of five years from the date the conventional gasoline or blendstock is produced or imported, and deliver such documents to the Administrator of EPA upon the Administrator's request.

[59 FR 7860, Feb. 16, 1994, as amended at 59 FR 36969, July 20, 1994]

§80.105 Reporting requirements.

(a) Beginning with the 1995 averaging period, and for each subsequent averaging period, any refiner for each refinery or group of refineries at which any conventional gasoline is produced, and any importer that imports any conventional gasoline, shall submit to the Administrator a report which contains the following information:

(1) The total gallons of conventional gasoline produced or imported;

(2)(i) The total gallons of applicable blendstocks produced or imported and transferred to others that are not excluded under §80.102(d)(3); and

(ii) The total gallons of applicable blendstocks produced or imported and transferred to others that are excluded under §80.102(d)(3);

(3) The total gallons of blendstocks included in compliance calculations pursuant to §80.102(e)(2);

(4)(i) If using the simple model:

(A) The applicable exhaust benzene emissions standard under §80.101(b)(1)(i);

(B) The average exhaust benzene emissions under §80.101(g);

(C) The applicable sulfur content standard under §80.101(b)(1)(ii) in parts per million;

(D) The average sulfur content under §80.101(g) in parts per million;

(E) The difference between the applicable sulfur content standard under §80.101(b)(1)(ii) in parts per million and the average sulfur content under paragraph (a)(4)(i)(D) of this section in parts per million, indicating whether the average is greater or lesser than the applicable standard;

(F) The applicable olefin content standard under §80.101(b)(1)(iii) in volume percent;

(G) The average olefin content under §80.101(g) in volume percent;

(H) The difference between the applicable olefin content standard under §80.101(b)(1)(iii) in volume percent and the average olefin content under paragraph (a)(4)(i)(G) of this section in volume percent, indicating whether the

average is greater or lesser than the applicable standard;

(I) The applicable T90 distillation point standard under § 80.101(b)(1)(iv) in degrees Fahrenheit;

(J) The average T90 distillation point under § 80.101(g) in degrees Fahrenheit; and

(K) The difference between the applicable T90 distillation point standard under § 80.101(b)(1)(iv) in degrees Fahrenheit and the average T90 distillation point under paragraph (a)(4)(i)(J) of this section in degrees Fahrenheit, indicating whether the average is greater or lesser than the applicable standard.

(ii) If using the optional complex model, the applicable exhaust benzene emissions standard and the average exhaust benzene emissions, under § 80.101(b)(2) and (g).

(iii) If using the complex model:

(A) The applicable exhaust toxics emissions standard and the average exhaust toxics emissions, under § 80.101(b)(3) and (g); and

(B) The applicable NO_X emissions standard and the average NO_X emissions, under § 80.101(b)(3) and (g).

(5) The following information for each batch of conventional gasoline or batch of blendstock included under paragraph (a) of this section:

(i) The batch number;

(ii) The date of production;

(iii) The volume of the batch;

(iv) The grade of gasoline produced (i.e., premium, mid-grade, or regular); and

(v) The properties, pursuant to § 80.101(i); and

(6) Such other information as EPA may require.

(b) The reporting requirements of paragraph (a) of this section do not apply in the case of any conventional gasoline or gasoline blendstock that is excluded from a refiner's or importer's compliance calculation pursuant to § 80.101(e).

(c) For each averaging period, each refiner and importer shall cause to be submitted to the Administrator of EPA, by May 30 of each year, a report in accordance with the requirements for the Attest Engagements of §§ 80.125 through 80.131.

(d) The report required by paragraph (a) of this section shall be:

(1) Submitted on forms and following procedures specified by the Administrator of EPA;

(2) Submitted to EPA by the last day of February each year for the prior calendar year averaging period; and

(3) Signed and certified as correct by the owner or a responsible corporate officer of the refiner or importer.

[59 FR 7860, Feb. 16, 1994, as amended at 59 FR 36969, July 20, 1994; 60 FR 65575, Dec. 20, 1995]

§ 80.106 Product transfer documents.

(a)(1) On each occasion when any person transfers custody or title to any conventional gasoline, the transferor shall provide to the transferee documents which include the following information:

(i) The name and address of the transferor;

(ii) The name and address of the transferee;

(iii) The volume of gasoline being transferred;

(iv) The location of the gasoline at the time of the transfer;

(v) The date of the transfer;

(vi) In the case of transferors or transferees who are refiners or importers, the EPA-assigned registration number of those persons; and

(vii) The following statement: ''This product does not meet the requirements for reformulated gasoline, and may not be used in any reformulated gasoline covered area.''

(2) The requirements of paragraph (a)(1) of this section apply to product that becomes gasoline upon the addition of oxygenate only.

(b) On each occasion when any person transfers custody or title to any blendstock that has been included in the refiner's or importer's compliance calculations under § 80.102(e)(2), the transferor shall provide to the transferee documents which include the following statement: ''For purposes of the Anti-Dumping requirements under 40 CFR part 80, subpart E, this blendstock has been accounted for by the refiner that produced it, and must be excluded from any subsequent compliance calculations.''

§§80.107–80.124 [Reserved]

Subpart F—Attest Engagements

SOURCE: 59 FR 7875, Feb. 16, 1994, unless otherwise noted.

§80.125 Attest engagements.

(a) Any refiner, importer, and oxygenate blender subject to the requirements of this subpart F shall engage an independent certified public accountant, or firm of such accountants (hereinafter referred to in this subpart F as ''CPA''), to perform an agreed-upon procedure attestation engagement of the underlying documentation that forms the basis of the reports required by §§80.75 and 80.105.

(b) The CPA shall perform the attestation engagements in accordance with the Statements on Standards for Attestation Engagements.

(c) The CPA may complete the requirements of this subpart F with the assistance of internal auditors who are employees or agents of the refiner, importer, or oxygenate blender, so long as such assistance is in accordance with the Statements on Standards for Attestation Engagements.

(d) Notwithstanding the requirements of paragraph (a) of this section, any refiner, importer, or oxygenate blender may satisfy the requirements of this subpart F if the requirements of this subpart F are completed by an auditor who is an employee of the refiner, importer, or oxygenate blender, provided that such employee:

(1) Is an internal auditor certified by the Institute of Internal Auditors, Inc. (hereinafter referred to in this subpart F as ''CIA''); and

(2) Completes the internal audits in accordance with the Codification of Standards for the Professional Practice of Internal Auditing.

(e) Use of a CPA or CIA who is debarred, suspended, or proposed for debarment pursuant to the Governmentwide Debarment and Suspension Regulations, 40 CFR part 32, or the Debarment, Suspension, and Ineligibility Provisions of the Federal Acquisition Regulations, 48 CFR part 9, subpart 9.4, shall be deemed in noncompliance with the requirements of this section.

(f) The following documents are incorporated by reference: the Statements on Standards for Attestation Engagements, Codification of Statements on Auditing Standards, written by the American Institute of Certified Public Accountants, Inc., 1991, and published by the Commerce Clearing House, Inc., Identification Number 059021, and the Codification of Standards for the Professional Practice of Internal Auditing, written and published by the Institute of Internal Auditors, Inc., 1989, Identification Number ISBN 0–89413–207–5. These incorporations by reference were approved by the Director of the Federal Register in accordance with 5 U.S.C. 552(a) and 1 CFR part 51. Copies of the Statements on Standards for Attestation Engagements may be obtained from the American Institute of Certified Public Accountants, Inc., 1211 Avenue of the Americas, New York, New York 10036, and copies of the Codification of Standards for the Professional Practice of Internal Auditing may be obtained from the Institute of Internal Auditors, Inc., 249 Maitland Avenue, Altamonte Springs, Florida 32701–4201. Copies may be inspected at the U.S. Environmental Protection Agency, Office of the Air Docket, 401 M Street, SW., Washington, DC., or at the Office of the Federal Register, 800 North Capitol Street, NW., suite 700, Washington DC.

[59 FR 7875, Feb. 16, 1994, as amended at 59 FR 36969, July 20, 1994]

§80.126 Definitions.

The following definitions shall apply for the purposes of this subpart F:

(a) *Averaging compliance records* shall include the calculations used to determine compliance with relevant standards on average, for each averaging period and for each quantity of gasoline for which standards must be achieved separately.

(b) *Credit trading records* shall include worksheets and EPA reports showing actual and complying totals for oxygen and benzene; credit calculation worksheets; contracts; letter agreements; and invoices and other documentation evidencing the transfer of credits.

(c) *Designation records* shall include laboratory analysis reports that identify whether gasoline meets the requirements for a given designation; operational and accounting reports of product storage; and product transfer documents.

(d) *Oxygenate blender records* shall include laboratory analysis reports; refiner, importer and oxygenate blender contracts; quality assurance program records; product transfer documents; oxygenate purchasing, inventory, and usage records; and daily tank inventory gauging reports, meter tickets, and product transfer documents.

(e) Product transfer documents shall include documents that reflect the transfer of ownership or physical custody of gasoline or blendstock, including invoices, receipts, bills of lading, manifests, and pipeline tickets.

(f) A *tender* means the physical transfer of custody of a volume of gasoline or other petroleum product all of which has the same identification (reformulated gasoline, conventional gasoline, RBOB, and other non-finished gasoline petroleum products), and characteristics (time and place of use restrictions for reformulated gasoline).

(g) *Volume records* shall include summaries of gasoline produced or imported that account for the volume of each type of gasoline produced or imported. The volumes shall be based on tank gauges or meter reports and temperature adjusted to 60 degrees Fahrenheit.

§ 80.127 Sample size guidelines.

In performing the attest engagement, the auditor shall sample relevant populations to which agreed-upon procedures will be applied using the methods specified in this section, which shall constitute a representative sample.

(a) Sample items shall be selected in such a way as to comprise a simple random sample of each relevant population; and

(b) Sample size shall be determined using one of the following options:

(1) *Option 1.* Determine the sample size using the following table:

SAMPLE SIZE, BASED UPON POPULATION SIZE

No. in population (N)	Sample size
66 and larger	29
41–65	25
26–40	20
0–25	N or 19, whichever is smaller.

(2) *Option 2.* Determine the sample size in such a manner that the sample size is equal to that which would result by using the following parameters and standard statistical methodologies:

Confidence Level—95%

Expected Error Rate—0%

Maximum Tolerable Error Rate—10%

(3) *Option 3.* The auditor may use some other form of sample selection and/or some other method to determine the sample size, provided that the resulting sample affords equal or better strength of inference and freedom from bias (as compared with paragraphs (b)(1) and (2) of this section), and that the auditor summarizes the substitute methods and clearly demonstrates their equivalence in the final report on the audit.

§ 80.128 Agreed upon procedures for refiners and importers.

The following are the minimum attest procedures that shall be carried out for each refinery and importer. Agreed upon procedures may vary from the procedures stated in this section due to the nature of the refiner's or importer's business or records, provided that any refiner or importer desiring to modify procedures obtains prior approval from EPA.

(a) Read the refiner's or importer's reports filed with EPA for the previous year as required by §§ 80.75, 80.83(g), and 80.105.

(b) Obtain a gasoline inventory reconciliation analysis for the current year from the refiner or importer which includes reformulated gasoline, RBOB, conventional gasoline, and non-finished-gasoline petroleum products.

(1) Test the mathematical accuracy of the calculations contained in the analysis.

(2) Agree the beginning and ending inventories to the refiner's or importer's perpetual inventory records.

(c) Obtain separate listings of all tenders during the current year of reformulated gasoline, RBOB, conventional gasoline, and non-finished-gasoline petroleum products.

(1) Test the mathematical accuracy of the calculations contained in the listings.

(2) Agree the listings of tenders' volumes to the gasoline inventory reconciliation in paragraph (b) of this section.

(3) Agree the listings of tenders' volumes, where applicable, to the EPA reports.

(d) Select a representative sample from the listing of reformulated gasoline tenders, and for this sample:

(1) Agree the volumes to the product transfer documents;

(2) Compare the product transfer documents designation for consistency with the time and place, and compliance model designations for the tender (VOC-controlled or non-VOC-controlled, VOC region for VOC-controlled, OPRG versus non-OPRG, summer or winter gasoline, and simple or complex model certified); and

(3) Trace back to the batch or batches in which the gasoline was produced or imported. Obtain the refiner's or importer's internal laboratory analyses for each batch and compare such analyses for consistency with the analyses results reported to EPA and to the time and place designations for the tender's product transfer documents.

(e) Select a representative sample from the listing of RBOB tenders, and for this sample:

(1) Agree the volumes to the original product transfer documents;

(2) Determine that the requisite contract was in place with the downstream blender designating the required blending procedures, or that the refiner or importer accounted for the RBOB using the assumptions in § 80.69(a)(8) in the case of RBOB designated as ''any oxygenate,'' or ''ether only,'' or using the assumptions in §§ 80.83(c)(1)(ii) (A) and (B) in the case of RBOB designated as ''any renewable oxygenate,'' ''non VOC controlled renewable ether only,'' or ''renewable ether only'';

(3) Review the product transfer documents for the indication of the type and amount of oxygenate required to be added to the RBOB;

(4) Trace back to the batch or batches in which the RBOB was produced or imported. Obtain refiner's or importer's internal lab analysis for each batch and agree the consistency of the type and volume of oxygenate required to be added to the RBOB with that indicated in applicable tender's product transfer documents;

(5) Agree the sampling and testing frequency of the refiner's or importer's downstream oxygenated blender quality assurance program with the sampling and testing rates as required in § 80.69(a)(7); and

(6) In the case of RBOB designated as ''any renewable oxygenate,'' ''non VOC controlled renewable ether'' or ''renewable ether only'', review the documentation from the producer of the oxygenate to determine if the oxygenate meets the requirements of § 80.83(a).

(f) Select a representative sample of reformulated gasoline and RBOB batches produced by computerized in-line blending, and for this sample:

(1) Obtain the composite sample internal laboratory analyses results; and

(2) Agree the results of the internal laboratory analyses to the quarterly batch information submitted to the EPA.

(g) Select a representative sample from the listing of the tenders of conventional gasoline and conventional gasoline blendstock that becomes gasoline through the addition of oxygenate only, and for this sample:

(1) Agree the volumes to the product transfer documents;

(2) For a representative sample of tenders, trace back to the batch or batches in which the gasoline was produced or imported. Obtain the refiner's or importer's internal laboratory analyses for each batch and compare such analyses for consistency with the analyses results reported to EPA; and

(3) Where the refiner or importer has included oxygenate that is blended downstream of the refinery or import facility in its compliance calculations in accordance with § 80.101(d)(4)(ii), obtain a listing of each downstream oxygenate blending operation from which

the refiner or importer is claiming oxygenate for use in compliance calculations, and for each such operation:

(i) Determine if the refiner or importer had a contract in place with the downstream blender during the period oxygenate was blended;

(ii) Determine if the refiner or importer has records reflecting that it conducted physical inspections of the downstream blending operation during the period oxygenate was blended;

(iii) Obtain a listing from the refiner or importer of the batches of conventional gasoline or conventional sub-octane blendstock, and the compliance calculations which include oxygenate blended by the downstream oxygenate blender, and test the mathematical accuracy of the calculations contained in this listing;

(iv) Obtain a listing from the downstream oxygenate blender of the oxygenate blended with conventional gasoline or sub-octane blendstock that was produced or imported by the refiner or importer. Test the mathematical accuracy of the calculations in this listing. Agree the overall oxygenate blending listing obtained from the refiner or importer with the listing obtained from the downstream oxygenate blender. Select a representative sample of oxygenate blending listing obtained from the downstream oxygenate blender, and for this sample:

(A) Using product transfer documents, determine if the oxygenate was blended with conventional gasoline or conventional sub-octane blendstock that was produced by the refiner or imported by the importer; and

(B) Agree the oxygenate volume with the refiner's or importer's listing of oxygenate claimed for this gasoline;

(v) Obtain a listing of the sampling and testing conducted by the refiner or importer over the downstream oxygenate blending operation. Select a representative sample of the test results from this listing, and for this sample agree the tested oxygenate volume with the oxygenate use listings from the refiner or importer, and from the oxygenate blender; and

(vi) Obtain a copy of the records reflecting the refiner or importer audit over the downstream oxygenate blending operation. Review these records for indications that the audit included review of the overall volumes and type of oxygenate purchased and used by the oxygenate blender to be consistent with the oxygenate claimed by the refiner or importer and that this oxygenate was blended with the refiner's or importer's gasoline or blending stock.

(h) In the case of a refiner or importer that is not exempt from blendstock tracking under § 80.102(f):

(1) Obtain listings for those tenders of non-finished-gasoline classified by the refiner or importer as:

(i) Applicable blendstock which is included in the refiner's or importer's blendstock tracking calculations pursuant to § 80.102(b) through (d);

(ii) Applicable blendstock which is exempt pursuant to § 80.102(d)(3) from inclusion in the refiner's or importer's blendstock tracking calculations pursuant to § 80.102 (b) through (d); and

(iii) All other non-finished-gasoline petroleum products.

(2) Test the mathematical accuracy of the calculations contained in the analysis.

(3) Agree the listings of tenders' volumes to the gasoline inventory reconciliation in paragraph (b) of this section.

(4) Agree the EPA report for the volume classified as applicable blendstock pursuant to the requirements of § 80.102.

(5) Select a representative sample from the listing of applicable blendstock which is reported to EPA, and for such sample:

(i) Agree the volumes to records supporting the transfer of the tender to another person; and

(ii) Trace back to the batch or batches in which the non-finished-gasoline petroleum product was produced or imported. Obtain the refiner's or importer's internal laboratory analysis for each batch and compare such analysis for consistency with the product type assigned by the refiner or importer (e.g., reformate, light coker naphtha, etc.), and that this product type is included in the applicable blendstock list at § 80.102(a).

(6) Select a representative sample from the listing of applicable

blendstock which is exempt from inclusion in the blendstock tracking report to EPA, and for such sample:

(i) Agree the volumes to records supporting the transfer of the tender to another person;

(ii) Trace back to the batch or batches in which the non-finished-gasoline petroleum product was produced or imported. Obtain the refiner's or importer's internal laboratory analysis for each batch and compare such analysis for consistency with the product type assigned by the refiner or importer (e.g., reformate, light coker naphtha, etc.), and that this product type is included in the applicable blendstock list at §80.102(a); and

(iii) Obtain the documents that demonstrate the purpose for which the product was used, and agree that the documented purpose is one of those specified at §80.102(d)(3).

(7) Select a representative sample from the listing of all other non-finished-gasoline petroleum products, and for such sample:

(i) Agree the volumes to records supporting the transfer of the tender to another person;

(ii) Trace back to the batch or batches in which the non-finished-gasoline petroleum product was produced or imported. Obtain the refiner's or importer's internal laboratory analysis for each batch and compare such analysis for consistency with the product-type assigned by the refiner or importer (e.g., alkylate, isobutane, etc.), and agree that this product type is excluded from the applicable blendstock list at §80.102(a).

(i) In the case of a refiner or importer required to account for blendstocks produced or imported under §80.102(e)(2):

(1) Obtain listings for those tenders of non-finished-gasoline tenders classified by the refiner or importer as:

(i) Blendstock which is included in the compliance calculations for the refinery or importer; and

(ii) All other non-finished-gasoline petroleum products;

(2) Test the mathematical accuracy of the calculations contained in the listings under paragraph (i)(1) of this section;

(3) Agree the listings of tenders' volumes to the gasoline inventory reconciliation in paragraph (b) of this section;

(4) Select a representative sample from the listing of blendstock tenders which are included in the compliance calculations for the refinery or importer, and for such sample:

(i) Agree the volumes to records supporting the transfer of the tender to another person;

(ii) Review the product transfer documents for the statement indicating the blendstock has been accounted-for, and may not be included in another party's compliance calculations; and

(iii) Trace back to the batch or batches in which the blendstock was produced or imported. Obtain the refiner's or importer's internal laboratory analyses for each batch and compare such analyses for consistency with the analyses results reported to EPA; and

(5) Select a representative sample from the listing of tenders of non-finished-gasoline petroleum products that are excluded from the refiner's or importer's compliance calculations, and for such sample confirm that documents demonstrate the petroleum products were used for a purpose other than the production of gasoline within the United States.

[59 FR 7875, Feb. 16, 1994, as amended at 59 FR 36969, July 20, 1994; 59 FR 39292, Aug. 2, 1994]

EFFECTIVE DATE NOTE: At 59 FR 39292, Aug. 2, 1994, §80.128 was amended by revising paragraphs (a) and (e)(2); removing ''and'' at the end of paragraph (e)(4); removing the period at the end of paragraph (e)(5) and adding ''; and'' in its place; and adding paragraph (e)(6) effective September 1, 1994. At 59 FR 60715, Nov. 28, 1994, the amendment was stayed effective September 13, 1994.

§80.129 Agreed upon procedures for downstream oxygenate blenders.

The following are the procedures to be carried out at each oxygenate blending facility that is subject to the requirements of this subpart F:

(a) Read the oxygenate blender's reports filed with the EPA for the previous year as required by §§80.75 and 80.83(g).

(b) Obtain a material balance analysis summarizing receipts of RBOB and

oxygenate to the blender, and the deliveries of reformulated gasoline from the blender.

(1) Test the mathematical accuracy of the calculations contained in the analysis.

(2) Agree the beginning and ending inventory to the blender's perpetual inventory records.

(3) Agree the analysis, where applicable, to the EPA reports.

(c) Obtain a listing of all RBOB receipts for the previous year.

(1) Test the mathematical accuracy of the volumetric calculations contained in the listing.

(2) Agree the volumetric calculations of RBOB receipts to the calculations contained in the material balance analysis.

(3) Select a representative sample of RBOB receipts from the listing. Review the product transfer documents for the indication of the type and volume of oxygenate required to be added to the RBOB.

(d) Obtain a listing of all reformulated gasoline batches produced by the blender during the previous year.

(1) Test the mathematical accuracy of the volumetric calculations contained in the listing.

(2) Agree the volumetric calculations contained in the listing to the calculations contained in the material balance analysis.

(3) Select a representative sample of the batches from the listing, and for these batches:

(i) Obtain the blender's records that indicate the volume and type of oxygenate that was blended, the volume of RBOB that was blended and the product transfer documents for the RBOB, and the internal lab analysis where applicable;

(ii) Agree the consistency of the type and volume of oxygenate added to the RBOB with that indicated to be added in the RBOB's product transfer documents;

(iii) In the case of RBOB designated as ''any renewable oxygenate,'' ''non VOC controlled renewable ether only,'' or ''renewable ether only,'' review the documentation from the producer of the oxygenate to determine if the oxygenate meets the requirements of § 80.83(a);

(iv) Recalculate the actual oxygen content based on the volumes blended and agree to the report to EPA on oxygen; and

(v) Review the time and place designations in the product transfer documents prepared for the batch by the blender, for consistency with the time and place designations in the product transfer documents for the RBOB (e.g., VOC-controlled or non-VOC-controlled, VOC region for VOC-controlled, OPRG versus non-OPRG, and simple or complex model).

(e) Agree the sampling and testing frequency of the blender's quality assurance program with the sampling and testing rates required in § 80.69.

[59 FR 7875, Feb. 16, 1994, as amended at 59 FR 36969, July 20, 1994; 59 FR 39292, Aug. 2, 1994]

EFFECTIVE DATE NOTE: At 59 FR 39292, Aug. 2, 1994, § 80.129 was amended by revising paragraphs (a), (d)(3)(iii) and (d)(3)(iv), and adding paragraph (d)(3)(v) effective September 1, 1994. At 59 FR 60715, Nov. 28, 1994, the amendment was stayed effective September 13, 1994.

§ 80.130 Agreed upon procedures reports.

(a) *Reports.* (1) The CPA or CIA shall issue to the refiner, importer, or blender a report summarizing the procedures performed and the findings in accordance with the attest engagement or internal audit performed in compliance with this subpart.

(2) The refiner, importer or blender shall provide a copy of the auditor's report to the EPA within the time specified in § 80.75(m).

(b) *Record retention.* The CPA or CIA shall retain all records pertaining to the performance of each agreed upon procedure and pertaining to the creation of the agreed upon procedures report for a period of five years from the date of creation and shall deliver such records to the Administrator upon request.

§§ 80.131—80.135 [Reserved]

Subpart G—Detergent Gasoline

SOURCE: 59 FR 54706, Nov. 1, 1994, unless otherwise noted.

§80.140 Definitions.

The definitions in this section apply only to subpart G of this part. Any terms not defined in this subpart shall have the meaning given them in 40 CFR part 80, subpart A, or, if not defined in 40 CFR part 80, subpart A, shall have the meaning given them in 40 CFR part 79, subpart A.

Additization means the addition of detergent to gasoline or post-refinery component in order to create detergent-additized gasoline or detergent-additized post-refinery component.

Automated detergent blending facility means any facility (including, but not limited to, a truck or individual storage tank) at which detergent is blended with gasoline or post-refinery component, by means of an injector system calibrated to automatically deliver a prescribed amount of detergent.

Base gasoline means any gasoline that does not contain detergent.

Carburetor deposits means the deposits formed in the carburetor during operation of a carburetted gasoline engine which can disrupt the ability of the carburetor to maintain the proper air/fuel ratio.

Carrier of detergent means any distributor of detergent who transports or stores or causes the transportation or storage of detergent without taking title to or otherwise having any ownership of the detergent, and without altering either the quality or quantity of the detergent.

Deposit control effectiveness means the ability of a detergent additive package to prevent the formation of deposits in gasoline engines.

Deposit control efficiency means the degree to which a detergent additive package at a given concentration in gasoline is effective in limiting the formation of deposits. The addition of inactive ingredients to a detergent additive package, to the extent that this addition dilutes the concentration of the detergent-active components, reduces the deposit control efficiency of the package.

Detergent additive package means any chemical compound or combination of chemical compounds, including carrier oils, that may be added to gasoline, or to post-refinery component blended with gasoline, in order to control deposit formation. Carrier oil means an oil that may be added to the package to mediate or otherwise enhance the detergent chemical's ability to control deposits. A detergent additive package may contain non-detergent-active components such as corrosion inhibitors, antioxidants, metal deactivators, and handling solvents.

Detergent blender means any person who owns, leases, operates, controls or supervises the blending operation of a detergent blending facility, or imports detergent-additized gasoline or detergent-additized post-refinery component.

Detergent blending facility means any facility (including, but not limited to, a truck or individual storage tank) at which detergent is blended with gasoline or post-refinery component.

Detergent-active components means the components of a detergent additive package which act to prevent the formation of deposits, including, but not necessarily limited to, the actual detergent chemical and any carrier oil (if present) that acts to enhance the detergent's ability to control deposits.

Detergent-additized gasoline (also called *detergent gasoline*) means any gasoline that contains base gasoline and detergent.

Detergent-additized post-refinery component means any post-refinery component that contains detergent.

Distributor of detergent means any person who transports or stores or causes the transportation or storage of detergent at any point between its manufacture and its introduction into gasoline.

Fuel injector deposits (also known as *port fuel injector deposits* or *PFID*) means the deposits formed on fuel injector(s) during and after operation of a gasoline engine, as evaluated by the reduction in the gasoline flow rate through the fuel injector(s).

Gasoline means any fuel for use in motor vehicles and motor vehicle engines, including both highway and off-highway vehicles and engines, and commonly or commercially known or sold as gasoline. The term ''gasoline'' is inclusive of base gasoline, detergent gasoline, and base gasoline or detergent gasoline that has been commingled with post-refinery component.

Hand blending detergent facility means any facility (including, but not limited to, a truck or individual storage tank) at which detergent is blended with gasoline or post-refinery component by the manual addition of detergent, or at which detergent is blended with these substances by any means that is not automated.

Intake valve deposits (*IVD*) means the deposits formed on the intake valve(s) during operation of a gasoline engine, as evaluated by weight.

Leaded gasoline means gasoline which is produced with the use of any lead additive or which contains more than 0.05 gram of lead per gallon or more than 0.005 gram of phosphorus per gallon.

Manufacturer of detergent means any person who owns, leases, operates, controls, or supervises a facility that manufactures detergent. Pursuant to the definition in 40 CFR 79.2(f), a manufacturer of detergent is also considered an additive manufacturer.

Post-refinery component means any gasoline blending stock or any oxygenate which is blended with gasoline subsequent to the gasoline refining process.

Repeatability of a test method means the amount of random error which is expected to affect the results obtained for a given test substance, when the test is replicated by a single operator in a given laboratory within a short period of time, using the same apparatus under constant operating conditions. Quantitatively, it is the difference between two such single results that would be exceeded in the long run in only one out of twenty normal and correct replications of the test method.

[59 FR 54706, Nov. 1, 1994, as amended at 61 FR 35356, July 5, 1996]

§ 80.141 Interim detergent gasoline program.

(a) *Effective dates of requirements.* (1) Until June 30, 1997, the products listed in paragraphs (a)(1)(i) through (iii) of this section must comply with either the interim program requirements described in this section or the certification program requirements described in § 80.161. Beginning July 1, 1997, the listed products must comply with the requirements in § 80.161. These dates and requirements apply to:

(i) All gasoline sold or transferred to a party who sells or transfers gasoline to the ultimate consumer;

(ii) All additized post-refinery component (PRC); and

(iii) All detergent additives sold or transferred for use in gasoline or PRC for compliance with the requirements of this subpart.

(2) Until July 31, 1997, all gasoline sold or transferred to the ultimate consumer must contain detergent additive(s) meeting either the interim requirements of this § 80.141 or the certification program requirements of § 80.161. Beginning August 1, 1997, such gasoline must contain detergent additive(s) meeting the certification requirements of § 80.161.

(b) *Applicability of gasoline and PRC detergency requirement; responsible parties.* (1) Except as specifically exempted in § 80.160, the detergency requirements of this subpart apply to all gasoline, whether intended for on-highway or nonroad use, including conventional, reformulated, oxygenated, and leaded gasolines, as well as the gasoline component of fuel mixtures of gasoline and alcohol fuels, gasoline used as marine fuel, gasoline service accumulation fuel (as described in § 86.113–94(a)(1) of this chapter), the gasoline component of fuel mixtures of gasoline and methanol used for service accumulation in flexible fuel vehicles (as described in § 86.113–94(d) of this chapter), gasoline used for factory fill purposes, and all additized PRC.

(2) Pursuant to paragraphs (c) through (f) of this section, compliance with these requirements is the responsibility of parties who directly or indirectly sell or dispense gasoline to the ultimate consumer as well as parties who manufacture, supply, or transfer detergent additives or detergent-additized post-refinery components.

(c) *Detergent registration requirements.* To be eligible for use by fuel manufacturers in complying with the gasoline detergency requirements of this subpart, a detergent additive package must be registered by its manufacturer under 40 CFR part 79 according to the specifications in paragraphs (c) (1) through (3) of this section. After evaluating the adequacy of registration data

provided by the detergent manufacturer pursuant to these requirements, if EPA finds the data to be deficient, EPA may disqualify the detergent package for use in complying with the gasoline detergency requirements of this subpart, under the provisions of paragraph (g) of this section.

(1) *Compositional data.* The compositional data supplied to EPA by the additive manufacturer for purpose of registering a detergent additive package under § 79.21(a) of this chapter must include:

(i) A complete listing of the components of the detergent additive package, using standard chemical nomenclature when possible or providing the chemical structure of any component for which the standard chemical name is not precise. Polymeric components may be reported as the product of other chemical reactants, provided that the supporting data specified in § 80.162(b) is also reported for such components.

(ii) The weight and/or volume percent (as applicable) of each component of the package, with variability in these amounts restricted according to the provisions of paragraph (c)(2) of this section.

(iii) For each detergent-active component of the package, classification into one of the following designations:

(A) Polyalkyl amine;

(B) Polyether amine;

(C) Polyalkylsuccinimide;

(D) Polyalkylaminophenol;

(E) Detergent-active carrier oil; and

(F) Other detergent-active component.

(2) *Allowable variation in compositional data.* (i) A single detergent additive registration may contain no variation in the identity of any of the detergent-active components identified pursuant to paragraph (c)(1)(iii) of this section.

(ii) A single detergent additive registration may specify a range of concentrations for identified detergent-active components, provided that, if each such component were present in the detergent additive package at the lower bound of its reported range of concentration, the minimum recommended concentration reported in accordance with the requirements of paragraph (c)(3) of this section would still provide the deposit control effectiveness claimed by the detergent registrant.

(iii) The identity or concentration of non-detergent-active components of the detergent additive package may vary under a single registration, provided that the range of such variation is specified in the registration, and that such variability does not reduce the deposit control effectiveness of the additive package as compared with the level of effectiveness claimed by the detergent registrant pursuant to the requirements of paragraph (c)(3) of this section.

(iv) Except as provided in paragraph (c)(2)(v) of this section, detergent additive packages which do not satisfy these restrictions must be separately registered. EPA may disqualify an additive for use in satisfying the requirements of this subpart if EPA determines that the variability included within a given detergent additive registration may reduce the deposit control effectiveness of the detergent package such that it could invalidate the minimum recommended concentration reported in accordance with the requirements of paragraph (c)(3) of this section.

(v) A change in minimum concentration requirements resulting from a modification of detergent additive composition shall not require a new detergent additive registration or a change in existing registration if:

(A) The modification is effected by a detergent blender only for its own use or for the use of parties which are subsidiaries of, or share common ownership with, the blender, and the modified detergent is not sold or transferred to other parties; and

(B) The modification is a dilution of the additive for the purpose of ensuring proper detergent flow in cold weather; and

(C) Gasoline is the only diluting agent used; and

(D) The diluted detergent is subsequently added to gasoline at a rate that attains the detergent's registered minimum recommended concentration, taking into account the dilution; and

(E) EPA is notified, either before or within seven days after the dilution action, of the identity of the detergent,

the identity of the diluting material, the amount or percentage of the dilution, the change in treat rate necessitated by the dilution, and the locations and time period of diluted detergent usage. The notification shall be sent or faxed to the address in § 80.174(c).

(3) *Minimum recommended concentration.* (i) The lower boundary of the recommended range of concentration for the detergent additive package in gasoline, which the additive manufacturer must report pursuant to the registration requirements in § 79.21(d) of this chapter, must equal or exceed the minimum concentration which the manufacturer has determined to be necessary for the control of deposits in the associated fuel type, pursuant to paragraph (e) of this section. The minimum recommended concentration shall be provided to EPA in units of gallons of detergent additive package per thousand gallons of gasoline or PRC, reported to four digits. This concentration is the lowest additive concentration (LAC) referred to elsewhere in this subpart.

(ii) The minimum concentration reported in the detergent registration according to the provisions of paragraph (c)(3)(i) of this section must also be communicated in writing by the additive manufacturer to each fuel manufacturer who purchases the subject detergent for purpose of compliance with the gasoline detergency requirements of this subpart, and to any additive manufacturer who purchases the subject additive with the intent of reselling it to a fuel manufacturer for this purpose.

(iii) Pursuant to the requirements of paragraph (e) of this section, EPA may require the additive manufacturer to submit data to support the deposit control effectiveness of the detergent package at the specified minimum effective concentration. EPA may disqualify an additive for use in satisfying the requirements of this subpart upon finding that the supporting data is inadequate. Manufacturers may be subject to the liabilities and enforcement actions in §§ 80.156 and 80.159 if such a finding is made.

(iv) Once included in the registration for a detergent additive package, the minimum concentration recommended by the detergent manufacturer to detergent blenders and other users of the detergent additive, pursuant to paragraph (c)(3)(ii) of this section, may not be changed without first notifying EPA. The notification must be sent by certified mail to the address specified in § 80.174(b). Changes to the minimum recommended concentration must be supported by available test data pursuant to paragraph (c)(3)(iii) of this section.

(v) A manufacturer may use a single set of test data to demonstrate the deposit control effectiveness of more than one registered detergent additive product, provided that:

(A) The additive products contain all of the same detergent-active components and no detergent-active components other than those contained in common; and

(B) The minimum concentration recommended for the use of each such additive product is specified such that, when each additive product is mixed in gasoline at the recommended concentration, each of its detergent-active components will be present at a final concentration no less than the lowest concentration for that component shown to be effective by the data available for the tested additive product.

(d) The rate at which a detergent blender treats gasoline with a detergent additive package must be no less than the minimum recommended concentration reported for the subject detergent additive pursuant to paragraph (c)(3) of this section, except under the following conditions:

(1) If a detergent blender believes that the minimum treat rate recommended by the manufacturer of a detergent additive exceeds the amount of detergent actually required for effective deposit control, and possesses substantiating data consistent with the guidelines in paragraph (e) of this section, then, upon informing EPA in writing of these circumstances, the detergent blender may use the detergent at a lower concentration.

(2) The notification to EPA must clearly specify the name of the detergent product and its manufacturer, the concentration recommended by the detergent manufacturer, and the lower

concentration which the detergent blender intends to use. The notification must also attest that data are available to substantiate the deposit control effectiveness of the detergent at the intended lower concentration. The notification must be sent by certified mail to the address specified in § 80.174(b).

(3) At its discretion, EPA may require that the detergent blender submit the test data purported to substantiate the claimed effectiveness of the lower concentration of the detergent additive. EPA may also require the manufacturer of the subject detergent additive to submit test data substantiating the minimum recommended concentration specified in the detergent additive registration. In either case, EPA will send a letter to the appropriate party, and the supporting data will be due to EPA within 30 days of receipt of EPA's letter.

(i) If the detergent blender fails to submit the required supporting data to EPA in the allotted time period, or if EPA judges the submitted data to be inadequate to support the detergent blender's claim that the lower concentration provides a level of deposit control consistent with the requirements of this section, then EPA will disapprove the use of the detergent at the lower concentration. Further, the detergent blender may be subject to applicable liabilities and penalties pursuant to §§ 80.156 and 80.159 for any gasoline or PRC it has additized at the lower concentration.

(ii) If the detergent manufacturer fails to submit the required test data to EPA within the allotted time period, EPA will proceed on the assumption that data are not available to substantiate the minimum recommended concentration specified in the detergent registration, and the subject additive may be disqualified for use in complying with the requirements of this subpart, pursuant to the procedures in paragraph (g) of this section. The detergent manufacturer may also be subject to applicable liabilities and penalties pursuant to §§ 80.156 and 80.159.

(iii) If both parties submit the required information, EPA will evaluate the quality and results of both sets of test data in relation to each other and to industry-consensus test practices and standards, in a manner consistent with the guidelines described in paragraph (e) of this section. EPA will approve or disapprove the use of the detergent at the lower concentration, and will inform both the detergent blender and the detergent manufacturer of the results of its analysis within 60 days of receipt of both sets of data.

(e) *Demonstration of deposit control efficiency*. At its discretion, EPA may require a detergent additive registrant to provide test data to support the deposit control effectiveness of a detergent at the minimum concentration recommended, pursuant to paragraph (c)(3) of this section and § 79.21(d) of this chapter. The required supporting data must be submitted to EPA within 30 days of receipt of EPA's request. EPA will notify the submitter, within 60 days after receiving the supporting data, whether the data is adequate to support the deposit control efficiency claimed. Subject to the procedures specified in paragraph (g) of this section, if the supporting data are not submitted or if EPA finds the data insufficient, the detergent may be disqualified for use by fuel manufacturers in complying with the requirements of this subpart. EPA will use the following guidelines in determining the adequacy of the supporting data:

(1) *CARB-based supporting test data*. For detergent additives which are certified by the California Air Resources Board (CARB) for use in the state of California (pursuant to Title 13, section 2257 of the California Code of Regulations), the CARB certification data constitutes adequate support of the detergent's effectiveness under this section, with the exception that CARB detergent certification data specific to California Phase II reformulated gasoline (pursuant to Title 13, Chapter 5, Article 1, Subarticle 2, California Code of Regulations, Standards for Gasoline Sold Beginning March 1, 1996) will not be considered adequate support for detergent effectiveness in gasolines that do not conform to the compositional specifications for California's Phase II reformulated gasoline. For CARB-based supporting data to be used to demonstrate detergent performance, the minimum recommended concentration reported in the detergent additive

registration must be no less than the concentration of the detergent-active components reported in the subject CARB detergent certification.

(2) EPA will evaluate the adequacy of other supporting data according to the following guidelines:

(i) Test fuel guidelines.

(A) The gasoline used in the supporting tests must contain the detergent-active components of the subject detergent additive package in an amount which corresponds to the minimum recommended concentrations recorded in the respective detergent registration, or less than this amount.

(B) The test fuels must not contain any detergent-active components other than those recorded in the subject detergent registration.

(C) The test fuels used must be reasonably typical of in-use fuels in their tendency to form deposits. Test fuel taken directly from commercial refinery production stock is acceptable. Specially refined low-deposit-forming fuels such as indolene are not acceptable. Other specially blended test fuels will be evaluated by EPA for acceptability based on the extent to which such fuels adequately represent the deposit-forming tendency of typical (average) in-use fuels, as reflected in the levels of the following fuel parameters: sulfur content, aromatic content, olefin content, T–90, and oxygenate content.

(D) The composition of the blended test fuel(s) used in carburetor deposit control testing, conducted to support the claimed effectiveness of detergents used in leaded gasoline, should be reasonably typical of in-use gasoline in its tendency to form carburetor deposits (or more severe than typical in-use fuels) as defined by the olefin and sulfur content. Test data using leaded fuels is preferred for this purpose, but data collected using unleaded fuels may also be acceptable provided that some correlation with additive performance in leaded fuels is available.

(ii) Test procedure guidelines.

(A) To be acceptable, test data submitted to support the deposit control effectiveness of a detergent additive must derive from testing conducted in conformity with good engineering practices.

(B) For demonstration of fuel injector and intake valve deposit control performance, the tests specified in §§ 80.165, or other vehicle-based tests using generally accepted industry procedures and standards, are preferred. Engine-based tests may also be acceptable, assuming a reasonable correlation with vehicle-based tests and standards can be demonstrated. Bench test data may be acceptable to demonstrate fuel injector deposit control performance, assuming the results can be correlated with vehicle- or engine-based tests and standards. Bench testing will not be considered acceptable for demonstration of IVD control performance. Examples of acceptable test procedures are contained in the following references:

(*1*) Intake Valve Deposit Test Procedures:

(*i*) ''Intake Valve Deposits—Fuel Detergency Requirements Revisited'', Bill Bitting et al., Society of Automotive Engineers, SAE Technical Paper No. 872117, 1987.[1]

(*ii*) ''BMW—10,000 Miles Intake Valve Test Procedure'', March 1, 1991, Section 2257, Title 13, California Code of Regulations.

(*iii*) [Reserved]

(*iv*) ''Effect on Intake Valve Deposits of Ethanol and Additives Common to the Available Ethanol Supply'', Clifford Shilbolm et al., SAE Technical Paper Series No. 902109, 1990.

(*2*) Fuel Injector Deposit Test Procedures:

(*i*) ''Test Method for Evaluating Port Fuel Injector (PFI) Deposits in Vehicle Engines'', March 1, 1991, Section 2257, Title 13, California Code of Regulations.

(*ii*) ''A Vehicle Test Technique for Studying Port Fuel Injector Deposits—A Coordinating Research Council Program'', Robert Tupa et al., SAE Technical paper No. 890213, 1989.

(*iii*) ''The Effects of Fuel Composition and Additives on Multiport Fuel Injector Deposits'', Jack Benson et al., SAE Technical Paper Series No. 861533, 1986.

(*iv*) ''Injector Deposits—The Tip of Intake System Deposit Problems'',

[1] Society of Automotive Engineers (SAE), 400 Commonwealth Drive, Warrendale, PA 15096–0001.

Brian Taneguchi, et al., SAE Technical Paper Series No. 861534, 1986.

(C) For demonstration of carburetor deposit control performance, any generally accepted vehicle, engine, or bench test procedure for carburetor deposit control will be considered adequate. Port and throttle body fuel injector deposit control test data will also be considered to be adequate demonstration of an additive's ability to control carburetor deposits. Examples of acceptable test procedures for demonstration of carburetor deposit control, in addition to the fuel injector test procedures listed above in paragraph (e)(2)(ii)(B)(*2*) of this section, are contained in the following references:

(*1*) ''Fuel Injector, Intake Valve, and Carburetor Detergency Performance of Gasoline Additives'', C.H. Jewitt et al., SAE Technical Paper No. 872114, 1987.

(*2*) ''Carburetor Cleanliness Test Procedure, State-of-the-Art Summary, Report: 1973–1981'', Coordinating Research Council, CRC Report No. 529.[3]

(f) *Detergent identification test procedure.* (1) At its discretion, EPA may require the additive registrant to submit an analytical procedure capable of identifying the detergent additive in its pure state. The test procedure will be due to EPA within 30 days of the registrant's receipt of the request. Subject to the provisions in paragraph (g) of this section, if the registrant fails to submit an analytical procedure, or if EPA judges a submitted procedure to be inadequate, EPA may deny or withdraw the detergent's eligibility to be used to satisfy the detergency requirements in this section.

(2) The analytical procedure submitted by the registrant must be able to both qualitatively and quantitatively identify each component of the detergent additive package. To be acceptable, the procedure must provide results that conform to reasonable and customary standards of repeatability and reproducibility, and reasonable and customary limits of detection and accuracy, for the type of test in question.

(3) A fourier transform infrared spectroscopy (FTIR)-based procedure, including an actual infrared spectrum of the detergent additive package and each component part of the detergent package obtained from this test method, is preferred.

(g) *Disqualification of a detergent additive package.* (1) When EPA makes a preliminary determination that a detergent additive registrant has failed to comply with the requirements of paragraph (c), (d)(3)(ii), (e), or (f) of this section, either by failing to submit required information for a subject detergent additive or by submitting information which EPA deems inadequate, EPA shall notify the additive registrant by certified mail, return receipt requested, setting forth the basis for that determination and informing the registrant that the detergent may lose its eligibility to be used to comply with the detergency requirements of this section.

(2) If EPA determines that the detergent registration was created by fraud or other misconduct, such as a negligent disregard for the truthfulness or accuracy of the required information or of the application, the detergent registration will be considered void *ab initio* and the revocation of qualification will be retroactive to January 1, 1995 or the date on which the additive product was first registered, whichever is later.

(3) The registrant will be afforded 60 days from the date of receipt of the notice of intent of detergent disqualification to submit written comments concerning the notice, and to demonstrate or achieve compliance with the specific data requirements which provide the basis for the proposed disqualification. If the registrant does not respond in writing within 60 days from the date of receipt of the notice of intent of disqualification, the detergent disqualification shall become final by operation of law and the Administrator shall notify the registrant of such disqualification. If the registrant responds in writing within 60 days from the date of receipt of the notice of intent to disqualify, the Administrator shall review and consider all comments submitted by the registrant before taking final

[3]Coordinating Research Council Inc. (CRC), 219 perimeter Center Parking, Atlanta, Georgia, 30346.

action concerning the proposed disqualification. All correspondence regarding a disqualification must be sent to the address specified in § 80.174(b).

(4) As part of a written response to a notice of intent to disqualify, a registrant may request an informal hearing concerning the notice. Any such request shall state with specificity the information the registrant wishes to present at such a hearing. If an informal hearing is requested, EPA shall schedule such a hearing within 90 days from the date of receipt of the request. If an informal hearing is held, the subject matter of the hearing shall be confined solely to whether or not the registrant has complied with the specific data requirements which provide the basis for the proposed disqualification. If an informal hearing is held, the designated presiding officer may be any EPA employee, the hearing procedures shall be informal, and the hearing shall not be subject to or governed by 40 CFR part 22 or by 5 U.S.C. 554, 556, or 557. A verbatim transcript of each informal hearing shall be kept and the Administrator shall consider all relevant evidence and arguments presented at the hearing in making a final decision concerning a proposed cancellation.

(5) If a registrant who has received a notice of intent to disqualify submits a timely written response, and the Administrator decides after reviewing the response and the transcript of any informal hearing to disqualify the detergent for use in complying with the requirements of this subpart, the Administrator shall issue a final disqualification order, forward a copy of the disqualification order to the registrant by certified mail, and promptly publish the disqualification order in the FEDERAL REGISTER. Any disqualification order issued after receipt of a timely written response by the registrant shall become legally effective five days after it is published in the FEDERAL REGISTER.

(6) Upon making a final decision to disqualify a detergent additive package pursuant to this paragraph (g), EPA shall inform all fuel manufacturers and secondary additive manufacturers whose product registrations report the potential use of the disqualified detergent that such detergent is no longer eligible for compliance with the requirements of this subpart. Such fuel manufacturers and secondary additive manufacturers shall have 45 days in which to stop using the ineligible detergent additive package and substitute an eligible detergent additive. When applicable, EPA shall also notify such parties that the detergent registration had been created by fraud or other misconduct, pursuant to paragraph (g)(2) of this section.

[59 FR 54706, Nov. 1, 1994, as amended at 61 FR 35356, July 5, 1996; 61 FR 58747, Nov. 18, 1996]

§§ 80.142—80.154 [Reserved]

§ 80.155 Interim detergent program controls and prohibitions.

(a)(1) No person shall sell, offer for sale, dispense, supply, offer for supply, transport, or cause the transportation of gasoline to the ultimate consumer for use in motor vehicles or in any off-road engines (except as provided in § 80.160), or to a gasoline retailer or wholesale purchaser-consumer, and no person shall detergent-additize gasoline, unless such gasoline is additized in conformity with the requirements of § 80.141. No person shall cause the presence of any gasoline in the gasoline distribution system unless such gasoline is additized in conformity with the requirements of § 80.141.

(2) Gasoline has been additized in conformity with the requirements of § 80.141 when the detergent component satisfies the requirements of § 80.141 and when:

(i) The gasoline has been additized in conformity with the detergent composition and purpose-in-use specifications of an applicable detergent registered under 40 CFR part 79, and in accordance with at least the minimum concentration specifications of that detergent as registered under 40 CFR part 79 or as otherwise provided under § 80.141(d); or

(ii) The gasoline is composed of two or more commingled gasolines and each component gasoline has been additized in conformity with the detergent composition and purpose-in-use specifications of a detergent registered

under 40 CFR part 79, and in accordance with at least the minimum concentration specifications of that detergent as registered under 40 CFR part 79 or as otherwise provided under §80.141(d); or

(iii) The gasoline is composed of a gasoline commingled with a post-refinery component (PRC), and both of these components have been additized in conformity with the detergent composition and use specifications of a detergent registered under 40 CFR part 79, and in accordance with at least the minimum concentration specifications of that detergent as registered under 40 CFR part 79 or as otherwise provided under §80.141(d).

(b) No person shall blend detergent into gasoline or PRC unless such person complies with the volumetric additive reconciliation requirements of §80.157.

(c) No person shall sell, offer for sale, dispense, supply, offer for supply, store, transport, or cause the transportation of any gasoline, detergent, or detergent-additized PRC unless the product transfer document for the gasoline, detergent or detergent-additized PRC complies with the requirements of §80.158.

(d) No person shall refine, import, manufacture, sell, offer for sale, dispense, supply, offer for supply, store, transport, or cause the transportation of any detergent that is to be used as a component of detergent-additized gasoline or detergent-additized PRC, unless such detergent conforms with the composition specifications of a detergent registered under 40 CFR part 79 and the detergent otherwise complies with the requirements of §80.141. No person shall cause the presence of any detergent in the detergent, PRC, or gasoline distribution systems unless such detergent complies with the requirements of §80.141.

(e)(1) No person shall sell, offer for sale, dispense, supply, offer for supply, transport, or cause the transportation of detergent-additized PRC, unless the PRC has been additized in conformity with the requirements of §80.141. No person shall cause the presence in the PRC or gasoline distribution systems of any detergent-additized PRC that fails to conform to the requirements of §80.141.

(2) PRC has been additized in conformity with the requirements of §80.141 when the detergent component satisfies the requirements of §80.141 and:

(i) The PRC has been additized in accordance with the detergent composition and use specifications of a detergent registered under 40 CFR part 79, and in accordance with at least the minimum concentration specifications of that detergent as registered under 40 CFR part 79 or as otherwise provided under §80.141(d); or

(ii) The PRC is composed of two or more commingled PRCs, and each component has been additized in accordance with the detergent composition and use specifications of a detergent registered under 49 CFR part 79, and in accordance with at least the minimum concentration specifications of that detergent as registered under 40 CFR part 79 or as otherwise provided under §80.141(d).

[61 FR 35358, July 5, 1996]

§80.156 Liability for violations of the interim detergent program controls and prohibitions.

(a) *Persons liable*—(1) *Gasoline nonconformity*. Where gasoline contained in any storage tank at any facility owned, leased, operated, controlled or supervised by any gasoline refiner, importer, carrier, distributor, reseller, retailer, wholesale purchaser-consumer, oxygenate blender, or detergent blender, is found in violation of any of the prohibitions specified in §80.155(a), the following persons shall be deemed in violation:

(i) Each gasoline refiner, importer, carrier, distributor, reseller, retailer, wholesale purchaser-consumer, oxygenate blender, or detergent blender, who owns, leases, operates, controls or supervises the facility (including, but not limited to, a truck or individual storage tank) where the violation is found;

(ii) Each gasoline refiner, importer, distributor, reseller, retailer, wholesale purchaser-consumer, oxygenate blender, detergent manufacturer, distributor, or blender, who refined, imported, manufactured, sold, offered for sale, dispensed, supplied, offered for supply,

stored, detergent additized, transported, or caused the transportation of the detergent-additized gasoline (or the base gasoline component, the detergent component, or the detergent-additized post-refinery component of the gasoline) that is in violation, and each such party that caused the gasoline that is in violation to be present in the gasoline distribution system; and

(iii) Each gasoline carrier who dispensed, supplied, stored, or transported any gasoline in the storage tank containing gasoline found to be in violation, and each detergent carrier who dispensed, supplied, stored, or transported the detergent component of any post-refinery component or gasoline in the storage tank containing gasoline found to be in violation, provided that the EPA demonstrates, by reasonably specific showings by direct or circumstantial evidence, that the gasoline or detergent carrier caused the violation.

(2) *Post-refinery component non-conformity*. Where detergent-additized PRC contained in any storage tank at any facility owned, leased, operated, controlled or supervised by any gasoline refiner, importer, carrier, distributor, reseller, retailer, wholesale purchaser-consumer, oxygenate blender, detergent manufacturer, carrier, distributor, or blender, is found in violation of the prohibitions specified in § 80.155(e), the following persons shall be deemed in violation:

(i) Each gasoline refiner, importer, carrier, distributor, reseller, retailer, wholesale-purchaser consumer, oxygenate blender, detergent manufacturer, carrier, distributor, or blender, who owns, leases, operates, controls or supervises the facility (including, but not limited to, a truck or individual storage tank) where the violation is found;

(ii) Each gasoline refiner, importer, distributor, reseller, retailer, wholesale-purchaser consumer, oxygenate blender, detergent manufacturer, distributor, or blender, who sold, offered for sale, dispensed, supplied, offered for supply, stored, detergent additized, transported, or caused the transportation of the detergent-additized PRC (or the detergent component of the PRC) that is in violation, and each such party that caused the PRC that is in violation to be present in the PRC or gasoline distribution systems; and

(iii) Each carrier who dispensed, supplied, stored, or transported any detergent-additized post-refinery component in the storage tank containing post-refinery component in violation, and each detergent carrier who dispensed, supplied, stored, or transported the detergent component of any detergent-additized post-refinery component which is in the storage tank containing detergent-additized post-refinery component found to be in violation, provided that the EPA demonstrates by reasonably specific showings by direct or circumstantial evidence, that the gasoline or detergent carrier caused the violation.

(3) *Detergent non-conformity*. Where the detergent (prior to additization) contained in any storage tank or container found at any facility owned, leased, operated, controlled or supervised by any gasoline refiner, importer, carrier, distributor, reseller, retailer, wholesale purchaser-consumer, oxygenate blender, detergent manufacturer, carrier, distributor, or blender, is found in violation of the prohibitions specified in § 80.155(d), the following persons shall be deemed in violation:

(i) Each gasoline refiner, importer, carrier, distributor, reseller, retailer, wholesale-purchaser consumer, oxygenate blender, detergent manufacturer, carrier, distributor, or blender, who owns, leases, operates, controls or supervises the facility (including, but not limited to, a truck or individual storage tank) where the violation is found;

(ii) Each gasoline refiner, importer, distributor, reseller, retailer, wholesale purchaser-consumer, oxygenate blender, detergent manufacturer, distributor, or blender, who sold, offered for sale, dispensed, supplied, offered for supply, stored, transported, or caused the transportation of the detergent that is in violation, and each such party that caused the detergent that is in violation to be present in the detergent, gasoline, or PRC distribution systems; and

(iii) Each gasoline or detergent carrier who dispensed, supplied, stored, or transported any detergent which is in the storage tank or container containing detergent found to be in violation,

providing that EPA demonstrates, by reasonably specific showings by direct or circumstantial evidence, that the gasoline or detergent carrier caused the violation.

(4) *Volumetric additive reconciliation.* Where a violation of the volumetric additive reconciliation requirements established by § 80.155(b) has occurred, the following persons shall be deemed in violation:

(i) Each detergent blender who owns, leases, operates, controls or supervises the facility (including, but not limited to, a truck or individual storage tank) where the violation has occurred; and

(ii) Each gasoline refiner, importer, carrier, distributor, reseller, retailer, wholesale purchaser-consumer, or oxygenate blender, and each detergent manufacturer, carrier, distributor, or blender, who refined, imported, manufactured, sold, offered for sale, dispensed, supplied, offered for supply, stored, transported, or caused the transportation of the detergent-additized gasoline, the base gasoline component, the detergent component, or the detergent-additized post-refinery component, of the gasoline that is in violation, provided that the EPA demonstrates, by reasonably specific showings by direct or circumstantial evidence, that such person caused the violation.

(5) *Product transfer document.* Where a violation of § 80.155(c) is found at a facility owned, leased, operated, controlled, or supervised by any gasoline refiner, importer, carrier, distributor, reseller, retailer, wholesale purchaser-consumer, oxygenate blender, detergent manufacturer, carrier, distributor, or blender, the following persons shall be deemed in violation: each gasoline refiner, importer, carrier, distributor, reseller, retailer, wholesale-purchaser consumer, oxygenate blender, detergent manufacturer, carrier, distributor, or blender, who owns, leases, operates, control or supervises the facility (including, but not limited to, a truck or individual storage tank) where the violation is found.

(b) *Branded refiner vicarious liability.* Where any violation of the prohibitions specified in § 80.155 has occurred, with the exception of violations of § 80.155(c), a refiner will also be deemed liable for violations occurring at a facility operating under such refiner's corporate, trade, or brand name or that of any of its marketing subsidiaries. For purposes of this section, the word facility includes, but is not limited to, a truck or individual storage tank.

(c) *Defenses.* (1) In any case in which a gasoline refiner, importer, distributor, carrier, reseller, retailer, wholesale-purchaser consumer, oxygenate blender, detergent distributor, carrier, or blender, is in violation of any of the prohibitions of § 80.155, pursuant to paragraphs (a) or (b) of this section as applicable, the regulated party shall be deemed not in violation if it can demonstrate:

(i) That the violation was not caused by the regulated party or its employee or agent (unless otherwise provided in this paragraph (c));

(ii) That product transfer documents account for the gasoline, detergent, or detergent-additized post-refinery component in violation and indicate that the gasoline, detergent, or detergent-additized post-refinery component satisfied relevant requirements when it left their control; and

(iii) That the party has fulfilled the requirements of paragraphs (c) (2) or (3) of this section, as applicable.

(2) *Branded refiner.* (i) Where a branded refiner, pursuant to paragraph (b) of this section, is in violation of any of the prohibitions of § 80.155 as a result of violations occurring at a facility (including, but not limited to, a truck or individual storage tank) which is operating under the corporate, trade or brand name of a refiner or that of any of its marketing subsidiaries, the refiner shall be deemed not in violation if it can demonstrate, in addition to the defense requirements stated in paragraph (c)(1) of this section, that the violation was caused by:

(A) An act in violation of law (other than these regulations), or an act of sabotage or vandalism, whether or not such acts are violations of law in the jurisdiction where the violation of the prohibitions of § 80.155 occurred; or

(B) The action of any gasoline refiner, importer, reseller, distributor, oxygenate blender, detergent manufacturer, distributor, blender, or retailer

or wholesale purchaser-consumer supplied by any of these persons, in violation of a contractual undertaking imposed by the refiner designed to prevent such action, and despite the implementation of an oversight program, including, but not limited to, periodic review of product transfer documents by the refiner to ensure compliance with such contractual obligation; or

(C) The action of any gasoline or detergent carrier, or other gasoline or detergent distributor not subject to a contract with the refiner but engaged by the refiner for transportation of gasoline, post-refinery component, or detergent, to a gasoline or detergent distributor, oxygenate blender, detergent blender, gasoline retailer or wholesale purchaser consumer, despite specification or inspection of procedures or equipment by the refiner which are reasonably calculated to prevent such action.

(ii) In this paragraph (c)(2), to show that the violation ''was caused'' by any of the specified actions, the party must demonstrate by reasonably specific showings, by direct or circumstantial evidence, that the violation was caused or must have been caused by another.

(3) *Detergent blender.* In any case in which a detergent blender is liable for violating any of the prohibitions of § 80.155, the detergent blender shall not be deemed in violation if it can demonstrate, in addition to the defense requirements stated in paragraph (c)(1) of this section, the following:

(i) That it obtained or supplied, as appropriate, prior to the detergent blending, accurate written instructions from the detergent manufacturer or other party with knowledge of such instructions, specifying the detergent's minimum recommended concentration (lowest additive concentration) pursuant to § 80.141(c)(3) and, if applicable, the limitations of this concentration for use in leaded product.

(ii) That it has implemented a quality assurance program that includes, but is not limited to, a periodic review of its supporting product transfer and volume measurement documents to confirm the correctness of its product transfer and volumetric additive reconciliation documents created for all products it additized.

(4) *Detergent manufacturer*—(i) *Presumptive liability affirmative defense.* Notwithstanding the provisions of paragraph (c)(1) of this section, in any case in which a detergent manufacturer is liable for violating any of the prohibitions of § 80.155, the detergent manufacturer shall be deemed not in violation if it can demonstrate each of the following:

(A) Product transfer documents which account for the detergent component of the product in violation and which indicate that such detergent satisfied all relevant requirements when it left the detergent manufacturer's control; and

(B) Written blending instructions which, pursuant to § 80.141(c)(3)(ii), were supplied by the detergent manufacturer to its customer who purchased or obtained from the manufacturer the detergent component of the product determined to be in violation. The written blending instructions must have been supplied by the manufacturer prior to the customer's use or sale of the detergent. The instructions must accurately identify the minimum recommended concentration (lowest additive concentration) specified in the detergent's 40 CFR part 79 registration, and must also accurately identify if the detergent, at that concentration, is only registered as effective for use in leaded gasoline.

(C) If the detergent batch used in the noncomplying product was produced less than one year before the manufacturer was notified by EPA of the possible violation, then the manufacturer must provide FTIR or other test results for the batch of detergent used in the noncomplying product, performed in accordance with the detergent testing procedure submitted by the manufacturer, or available for submission, pursuant to § 80.141(f).

(*1*) The analysis may have been conducted on the subject detergent batch at the time it was manufactured, or may be conducted on a sample of that batch which the manufacturer retained for such purpose at the time the batch was manufactured.

(*2*) The test results must accurately establish that, when it left the manufacturer's control, the detergent component of the product determined to be

in violation was in conformity with the chemical composition and concentration specifications reported pursuant to § 80.141(c)(1);

(D) If the detergent batch used in the noncomplying product was produced more than one year prior to the manufacturer's notification by EPA of the possible violation, then the manufacturer must provide either:

(*1*) Test results for the batch in question as specified in the paragraph (c)(4)(i)(C) of this section; or

(*2*) The following materials:

(*i*) Documentation of the measured viscosity, density, and basic nitrogen content of the detergent batch in question, or any other such physical parameters which the manufacturer normally uses to ensure production quality control, which establishes conformity with the manufacturer's quality control standards for such parameters; and

(*ii*) If the detergent registration identifies polymeric component(s) of the detergent package as the product(s) of other chemical reactants, documentation that the reagents used to synthesize the detergent batch in question were the same as those specified in the registration and that they met the manufacturer's normal acceptance criteria for such reagents, reported pursuant to § 80.162(b)(1).

(ii) *Detergent manufacturer causation liability*. In any case in which a detergent manufacturer is liable for a violation of § 80.155, and the manufacturer establishes an affirmative defense to such liability pursuant to paragraph (c)(4)(i) of this section, the detergent manufacturer will nonetheless be deemed liable for the violation of § 80.155 if EPA can demonstrate, by reasonably specific showings by direct or circumstantial evidence, that the detergent manufacturer caused the violation.

(5) *Defense against liability where more than one party may be liable for VAR violations.* In any case in which a party is presumptively or vicariously liable for a violation of § 80.155 due to a failure to meet the VAR requirements § 80.157, except for the VAR record requirements pursuant to § 80.157(g), such party shall not be deemed liable if it can establish the following:

(i) Prior to the violation it had entered into a written contract with another potentially liable detergent blender party (''the assuming party''), under which that other party assumed legal responsibility for fulfilling the VAR requirement that had been violated;

(ii) The contract included reasonable oversight provisions to ensure that the assuming party fulfilled its VAR responsibilities (including, but not limited to, periodic review of VAR records) and the oversight provision was actually implemented by the party raising the defense;

(iii) The assuming party is fiscally sound and able to pay its penalty for the VAR violation; and

(iv) The employees or agents of the party raising the defense did not cause the violation.

(6) *Defense to liability for gasoline nonconformity violations caused solely by the addition of misadditized ethanol or other PRC to the gasoline.* In any case in which a party is presumptively or vicariously liable for a gasoline non-conformity violation of § 80.155(a) caused solely by another party's addition of misadditized ethanol or other PRC to the gasoline, the former party shall not be deemed liable for the violation provided that it can establish that is has fulfilled the requirements of paragraphs (c)(1)(i) and (ii) of this section.

(7) *Detergent tank transitioning defenses.* The commingling of two detergents in the same detergent storage tank will not be deemed to violate or cause violations of any of the provisions of this subpart, provided the following conditions are met:

(i) The commingling must occur during a legitimate detergent transitioning event, *i.e.*, a shift from the use of one detergent to another through the delivery of the new detergent into the same tank that contains the original detergent; and

(ii) If the new detergent is restricted to use in leaded gasoline, then such restriction must be applied to the combined detergents; and

(iii) The commingling event must be documented, either on the VAR formula record or on attached supporting records; and

(iv) Notwithstanding any contrary provisions in § 80.157, a VAR formula record must be created for the combined detergents. The VAR compliance period must begin no later than the time of the commingling event. However, at the blender's option, the compliance period may begin earlier, thus including use of the uncombined original detergent within the same period, provided that the 31-day limitation pursuant to § 80.157(a)(6) is not exceeded; and

(v) The VAR formula record must also satisfy the requirements in one of the following paragraphs (c)(7)(v)(A) through (C) of this section, whichever applies to the commingling event. If neither paragraph (c)(7)(v)(A) nor (B) of this section initially applies, then the blender may drain and subsequently redeliver the original detergent into the tank in restricted amounts, in order to meet the conditions of paragraph (c)(7)(v)(A) or (B) of this section. Otherwise, the blender must comply with paragraph (c)(7)(v)(C) of this section.

(A) If both detergents have the same LAC, and the original detergent accounts for no more than 20 percent of the tank's total delivered volume after addition of the new detergent, then the VAR formula record is required to identify only the use of the new detergent.

(B) If the two detergents have different LACs and the original detergent accounts for 10 percent or less of the tank's total delivered volume after addition of the new detergent, then the VAR formula record is required to identify only the use of the new detergent, and must attain the LAC of the new detergent. If the original detergent's LAC is greater than that of the new detergent, then the compliance period may begin earlier than the date of the commingling event (pursuant to paragraph (c)(7)(iv) of this section) only if the original detergent does not exceed 10 percent of the total detergent used during the compliance period.

(C) If neither of the preceding paragraphs (c)(7)(v)(A) or (B) of this section applies, then the VAR formula record must identify both of the commingled detergents, and must use and attain the higher LAC of the two detergents. Once the commingled detergent has been depleted by an amount equal to the volume of the original detergent in the tank at the time the new detergent was added, subsequent VAR formula records must identify and use the LAC of only the new detergent.

(8) *Defense to liability for noncompliance with leaded-only use restrictions.* A party shall not be deemed liable for violations of § 80.155(a) or (e) caused solely by the additization or use of gasoline or PRC in violation of leaded-only use restrictions, provided that the conditions specified in § 80.169(c)(9) are met.

(d) *Detergent manufacturer causation liability*. In any case in which a detergent manufacturer is liable for a violation of § 80.155 pursuant to paragraph (a) of this section, and the manufacturer establishes affirmative defense to such liability pursuant to paragraph (c) of this section, the detergent manufacturer will be liable for the violation of § 80.155 pursuant to this paragraph (d) of this section, provided that EPA can demonstrate, by reasonably specific showings by direct or circumstantial evidence, that the detergent manufacturer caused the violation.

[59 FR 54706, Nov. 1, 1994, as amended at 61 FR 35358, July 5, 1996]

§ 80.157 Volumetric additive reconciliation ("VAR"), equipment calibration, and recordkeeping requirements.

This section contains requirements for automated detergent blending facilities and hand-blending detergent facilities. All gasolines and all PRC intended for use in gasoline must be additized, unless otherwise noted in supporting VAR records, and must be accounted for in VAR records. The VAR reconciliation standard is attained under this section when the actual concentration of detergent used per VAR formula record equals or exceeds the lowest additive concentration (LAC) specified for that detergent pursuant to § 80.141(c)(3), or, if appropriate, under § 80.141(d). A separate VAR formula record must be created for leaded gasoline additized with a detergent registered for use only with leaded gasoline, or used at a concentration that is registered as effective for leaded gasoline only. Detergent so used

must be accurately and separately measured, either through the use of a separate storage tank, a separate meter, or some other measurement system that is able to accurately distinguish its use. Recorded volumes of gasoline, detergent, and PRC must be expressed to the nearest gallon (or smaller units), except that detergent volumes of five gallons or less must be expressed to the nearest tenth of a gallon (or smaller units). However, if the blender's equipment cannot accurately measure to the nearest tenth of a gallon, then such volumes must be rounded downward to the next lower gallon. PRC included in the reconciliation must be identified. Each VAR formula record must also contain the following information:

(a) *Automated blending facilities.* In the case of an automated detergent blending facility, for each VAR period, for each detergent storage system and each detergent in that storage system, the following must be recorded:

(1) The manufacturer and commercial identifying name of the detergent additive package being reconciled, and the LAC specified in the detergent registration for use with the applicable type of gasoline (i.e., unleaded or leaded). The LAC must be expressed in terms of gallons of detergent per thousand gallons of gasoline or PRC, and expressed to four digits. If the specified LAC is only effective for use with leaded gasoline, the record must so indicate. If the detergent storage system which is the subject of the VAR formula record is a proprietary system under the control of a customer, this fact must be indicated on the record.

(2) The total volume of detergent blended into gasoline and PRC, in accordance with one of the following paragraphs, as applicable.

(i) For a facility which uses in-line meters to measure detergent usage, the total volume of detergent measured, together with supporting data which includes one of the following: the beginning and ending meter readings for each meter being measured, the metered batch volume measurements for each meter being measured, or other comparable metered measurements. The supporting data may be supplied on the VAR formula record or in the form of computer printouts or other comparable VAR supporting documentation.

(ii) For a facility which uses a gauge to measure the inventory of the detergent storage tank, the total volume of detergent shall be calculated from the following equation:

Detergent Volume=(A)−(B)+(C)−(D)

Where:

A=Initial detergent inventory of the tank

B=Final detergent inventory of the tank

C=Sum of any additions to detergent inventory

D=Sum of any withdrawals from detergent inventory for purposes other than the additization of gasoline or PRC.

The value of each variable in this equation must be separately recorded on the VAR formula record. In addition, a list of each detergent addition included in variable C and a list of each detergent withdrawal included in variable D must be provided, either on the formula record or as VAR supporting documentation.

(3) The total volume of gasoline plus PRC to which detergent has been added, together with supporting data which includes one of the following: The beginning and ending meter measurements for each meter being measured, the metered batch volume measurements for each meter being measured, or other comparable metered measurements. The supporting data may be supplied on the VAR formula record or in the form of computer printouts or other comparable VAR supporting documentation. If gasoline has intentionally been overadditized in anticipation of the later addition of unadditized PRC, then the total volume of gasoline plus PRC recorded must include the expected amount of unadditized PRC to be added later. In addition, the amount of gasoline which was overadditized for this purpose must be specified.

(4) The actual detergent concentration, calculated as the total volume of detergent added (pursuant to paragraph (a)(2) of this section), divided by the total volume of gasoline plus PRC

(pursuant to paragraph (a)(3) of this section). The concentration must be calculated and recorded to four digits.

(5) A list of each detergent concentration rate initially set for the detergent that is the subject of the VAR record, together with the date and description of each adjustment to any initially set concentration. The concentration adjustment information may be supplied on the VAR formula record or in the form of computer printouts or other comparable VAR supporting documentation. No concentration setting is permitted below the applicable LAC, except as may be modified pursuant to § 80.141(d) or as described in paragraph (a)(7) of this section.

(6) The dates of the VAR period, which shall be no longer than thirty-one days. If the VAR period is contemporaneous with a calendar month, then specifying the month will fulfill this requirement; if not, then the beginning and ending dates and times of the VAR period must be listed. The times may be supplied on the VAR formula record or in supporting documentation. Any adjustment to any detergent concentration rate more than 10 percent over the concentration rate initially set in the VAR period shall terminate that VAR period and initiate a new VAR period, except as provided in paragraph (a)(7) of this section.

(7) The concentration setting for a detergent injector may be set below the applicable LAC, or it may be adjusted more than 10 percent above the concentration initially set in the VAR period without terminating that VAR period, provided that:

(i) The purpose of the change is to correct a batch misadditization prior to the end of the VAR period and prior to the transfer of the batch to another party, or to correct an equipment malfunction; and

(ii) The concentration is immediately returned after the correction to a concentration that fulfills the requirements of paragraphs (a)(5) and (6) of this section; and

(iii) The blender creates and maintains documentation establishing the date and adjustments of the correction; and

(iv) If the correction is initiated only to rectify an equipment malfunction, and the amount of detergent used in this procedure is not added to gasoline in the compliance period, then this amount is subtracted from the detergent volume listed on the VAR formula record.

(8) If unadditized gasoline has been transferred from the facility, other than bulk transfers from refineries or pipelines to non-retail outlets or non-WPC facilities, the total amount of such gasoline must be specified.

(b) *Non-automated facilities.* In the case of a facility in which hand blending or any other non-automated method is used to blend detergent, for each detergent and for each batch of gasoline and each batch of PRC to which the detergent is being added, the following shall be recorded:

(1) The manufacturer and commercial identifying name of the detergent additive package being reconciled, and the LAC specified in the detergent registration for use with the applicable type of gasoline (i.e., unleaded or leaded). The LAC must be expressed in terms of gallons of detergent per thousand gallons of gasoline or PRC, and expressed to four digits. If the specified LAC is only effective for use with leaded gasoline, the record must so indicate.

(2) The date of the additization that is the subject of the VAR formula record.

(3) The volume of added detergent.

(4) The volume of the gasoline and/or PRC to which the detergent has been added. If gasoline has intentionally been overadditized in anticipation of the later addition of unadditized PRC, then the total volume of gasoline plus PRC recorded must include the expected amount of unadditized PRC to be added later. In addition, the amount of gasoline which was overadditized for this purpose must be specified.

(5) The brand (if known), grade, and leaded/unleaded status of gasoline, and/or the type of PRC.

(6) The actual detergent concentration, calculated as the volume of added detergent (pursuant to paragraph (b)(3) of this section), divided by the volume of gasoline and/or PRC (pursuant to paragraph (b)(4) of this section). The

concentration must be calculated and recorded to four digits.

(c) Every VAR formula record created pursuant to paragraphs (a) and (b) of this section shall contain the following:

(1) The signature of the creator of the VAR record;

(2) The date of the creation of the VAR record; and

(3) A certification of correctness by the creator of the VAR record.

(d) *Electronically-generated VAR formula and supporting records.* (1) Electronically-generated records are acceptable for VAR formula records and supporting documentation (including PTDs), provided that they are complete, accessible, and easily readable. VAR formula records must also be stored with access and audit security, which must restrict to a limited number of specified people those who have the ability to alter or delete the records. In addition, parties maintaining records electronically must make available for EPA use the hardware and software necessary to review the records.

(2) Electronically-generated VAR formula records may use an electronic user identification code to satisfy the signature requirements of paragraph (c)(1) of this section, provided that:

(i) The use of the ID is limited to the record creator; and

(ii) A paper record is maintained, which is signed and dated by the VAR formula record creator, acknowledging that the use of that particular user ID on a VAR formula record is equivalent to his/her signature on the document.

(e) Automated detergent blenders must calibrate their detergent equipment once in each calendar half year, with the acceptable calibrations being no less than one hundred twenty days apart. Equipment recalibration is also required each time the detergent package is changed, unless written documentation indicates that the new detergent package has the same viscosity as the previous detergent package. Detergent package change calibrations may be used to satisfy the semiannual requirement provided that the calibrations occur in the appropriate half calendar year and are no less than one hundred twenty days apart.

(f) The following VAR supporting documentation must also be created and maintained:

(1) For all automated detergent blending facilities, documentation reflecting performance of the calibrations required by paragraph (e) of this section, and any associated adjustments of the automated detergent equipment;

(2) For all hand-blending facilities which are terminals, a record specifying, for each calendar month, the total volume in gallons of transfers from the facility of unadditized base gasoline;

(3) For all detergent blending facilities, product transfer documents for all gasoline, detergent and detergent-additized PRC transferred into or out of the facility; in addition, bills of lading, transfer, or sale for all unadditized PRC transferred into the facility;

(4) For all automated detergent blending facilities, documentation establishing the brands (if known) and grades of the gasoline which is the subject of the VAR formula record;

(5) For all hand blending detergent blenders, the documentation, if in the party's possession, supporting the volumes of gasoline, PRC, and detergent reported on the VAR formula record; and

(6) For all detergent blending facilities, documentation establishing the curing of a batch or amount of misadditized gasoline or PRC, or the curing of a use restriction on the additized gasoline or PRC, and providing at least the following information: the date of the curing procedure; the problem that was corrected; the amount, name, and LAC of the original detergent used; the amount, name, and LAC of the added curing detergent; and the actual detergent concentration attained in, and the volume of, the total cured product.

(g) *Document retention and availability.* All detergent blenders shall retain the documents required under this section for a period of five years from the date the VAR formula records and supporting documentation were created, and shall deliver them upon request to the EPA Administrator or the Administrator's authorized representative.

(1) Except as provided in paragraph (g)(3) of this section, automated detergent blender facilities and hand-blender facilities which are terminals, which physically blend detergent into gasoline, must make immediately available to EPA, upon request, the preceding twelve months of VAR formula records plus the preceding two months of VAR supporting documentation.

(2) Except as provided in paragraph (g)(3) of this section, other hand-blending detergent facilities which physically blend detergent into gasoline must make immediately available to EPA, upon request, the preceding two months of VAR formula records and VAR supporting documentation.

(3) Facilities which have centrally maintained records at other locations, or have customers who maintain their own records at other locations for their proprietary detergent systems, and which can document this fact to the Agency, may have until the start of the next business day after the request to supply VAR supporting documentation, or longer if approved by the Agency.

(4) In this paragraph (g) of this section, the term immediately available means that the records must be provided, electronically or otherwise, within approximately one hour of EPA's request, or within a longer time frame as approved by EPA.

[59 FR 54706, Nov. 1, 1994, as amended at 61 FR 35360, July 5, 1996]

§ 80.158 Product transfer documents (PTDs).

(a) *Contents.* For each occasion when any gasoline refiner, importer, reseller, distributor, carrier, retailer, wholesale purchaser-consumer, oxygenate blender, detergent manufacturer, distributor, carrier, or blender, transfers custody or title to any gasoline, detergent, or detergent-additized PRC other than when detergent-additized gasoline is sold or dispensed at a retail outlet or wholesale purchaser-consumer facility to the ultimate consumer, the transferor shall provide to the transferee, and the transferee shall acquire from the transferor, documents which accurately include the following information:

(1) The names and addresses of the transferee and transferor; the address requirement may be fulfilled, in the alternative, through separate documentation which establishes said addresses and is maintained by the parties and made available to EPA for the same length of time as required for the PTDs, provided that the normal business procedure of these parties is not to identify addresses on PTDs.

(2) The date of the transfer.

(3) The volume of product transferred.

(4)(i) The identity of the product being transferred (i.e., its identity as base gasoline, detergent, detergent-additized gasoline, or specified detergent-additized oxygenate or detergent-additized gasoline blending stock that comprises a detergent-additized PRC). PTDs for detergent-additized gasoline or PRC are not required to identify the particular detergent used to additize the product.

(ii) If the product being transferred consists of two or more different types of product subject to this regulation, i.e., base gasoline, detergent-additized gasoline, or specified detergent-additized PRC, then the PTD for the commingled product must identify each such type of component contained in the commingled product.

(5) If the product being transferred is gasoline to which an oxygenate or a PRC has been added, then the PTD for the gasoline must identify the oxygenate or PRC. The PTDs for commingled, additized gasolines must identify all the oxygenates and PRCs added to either component.

(6) If the product being transferred is base gasoline, then in addition to the base gasoline identification, the following warning must be stated on the PTD: ''Not for sale to the ultimate consumer''. If, pursuant to § 80.160(a), the product being transferred is exempt base gasoline to be used for research, development, or test purposes only, the following warning must also be stated on the PTD: ''For use in research, development, and test programs only.''

(7) The name of the detergent additive as reported in its registration must be used to identify the detergent package on its PTD.

(8) If the product being transferred is leaded gasoline, then the PTD must disclose that the product contains lead and/or phosphorous, as applicable.

(9) If the product being transferred is detergent that is only authorized for the control of carburetor deposits, then the following must be stated on the detergent's transfer document: ''For use with leaded gasoline only.''

(10) If the product being transferred is detergent-additized gasoline that has been overadditized in anticipation of the later (or earlier) addition of PRC, then the PTD must include a statement that the product has been overadditized to account for a specified volume in gallons, or a specified percentage of the product's total volume, of additional, specified PRC.

(b) Gasoline may not be additized with a detergent authorized only for the control of carburetor deposits and whose product transfer document states ''For use with leaded gasoline only'', and gasoline may not be additized at the lower concentration specified for a detergent authorized at a lower concentration for the control of carburetor deposits only, unless the product transfer document for the gasoline to be additized identifies it as leaded gasoline.

(c) *Use of product codes and other non-regulatory language.* (1) Product codes and other non-regulatory language may not be used as a substitute for the specified PTD warning language specified in paragraph (a)(6) of this section for base gasoline, except that:

(i) The specified warning language may be omitted for bulk transfers of base gasoline from a refinery to a pipeline if there is a prior written agreement between the parties specifying that all such gasoline is unadditized and will not be transferred to the ultimate consumer;

(ii) Product codes may be used as a substitute for the specified warning language provided that the PTD is an electronic data interchange (EDI) document being used solely for the transfer of title to the base gasoline, and provided that the product codes otherwise comply with the requirements of this section.

(2) Product codes and other language not specified in this section may otherwise be used to comply with PTD information requirements, provided that they are clear, accurate, and not misleading.

(3) If product codes are used, they must be standardized throughout the distribution system in which they are used, and downstream parties must be informed of their full meaning.

(d) *PTD exemption for small transfers of additized gasoline.* Transfers of additized gasoline are exempt from the PTD requirements of this section provided all the following conditions are followed:

(1) The product is being transferred by a distributor who is not the product's detergent blender; and

(2) The recipient is a wholesale purchaser-consumer (WPC) or other ultimate consumer of gasoline, for its own use only or for that of its agents or employees; and

(3) The volume of additized gasoline being transferred is not greater than 550 gallons.

(e) *Recordkeeping period.* Any person creating, providing or acquiring product transfer documentation for gasoline, detergent, or detergent-additized PRC, except as provided in paragraph (d) of this section, shall retain the documents required by this section for a period of five years from the date the product transfer documentation was created, received or transferred, as applicable, and shall deliver such documents to EPA upon request. WPCs are not required to retain PTDs of additized gasoline received by them.

[61 FR 35362, July 5, 1996]

§80.159 Penalties.

(a) *General.* Any person who violates any prohibition or affirmative requirement of §80.155 shall be liable to the United States for a civil penalty of not more than the sum of $25,000 for every day of such violation and the amount of economic benefit or savings resulting from the violation.

(b) *Gasoline non-conformity.* Any violation of §80.155(a) shall constitute a separate day of violation for each and every day the gasoline in violation remains at any place in the gasoline distribution system, beginning on the day that the gasoline is in violation of the respective prohibition and ending on

the last day that such gasoline is offered for sale or is dispensed to any ultimate consumer.

(c) *Detergent non-conformity.* Any violation of § 80.155(d) shall constitute a separate day of violation for each and every day the detergent in violation remains at any place in the gasoline or detergent distribution system, beginning on the day that the detergent is in violation of the prohibition and ending on the last day that detergent-additized gasoline, containing the subject detergent as a component thereof, is offered for sale or is dispensed to any ultimate consumer.

(d) *Post-refinery component non-conformity.* Any violation of § 80.155(e) shall constitute a separate day of violation for each and every day the post-refinery component in violation remains at any place in the post-refinery component or gasoline distribution system, beginning on the day that the post-refinery component is in violation of the respective prohibition and ending on the last day that detergent-additized gasoline containing the post-refinery component is offered for sale or is dispensed to any ultimate consumer.

(e) *Product transfer document non-conformity.* Any violation of § 80.155(c) shall constitute a separate day of violation for every day the product transfer document is not fully in compliance. This is to begin on the day that the product transfer document is created or should have been created and to end at the later of the following dates: Either the day that the document is corrected and comes into compliance, or the day that gasoline not additized in conformity with interim detergent program requirements, as a result of the product transfer document non-conformity, is offered for sale or is dispensed to the ultimate consumer.

(f) *Volumetric additive reconciliation (VAR) record keeping non-conformity.* Any VAR recordkeeping violation of § 80.155(b) shall constitute a separate day of violation for every day that VAR recordkeeping is not fully in compliance. Each element of the VAR record keeping program that is not in compliance shall constitute a separate violation for purposes of this section.

(g) *Volumetric additive reconciliation (VAR) compliance standard non-conformity.* Any violation of the VAR compliance standard established in § 80.157 shall constitute a separate day of violation for each and every day of the VAR compliance period in which the standard was violated.

(h) *Volumetric additive reconciliation (VAR) equipment calibration non-conformity.* Any VAR equipment calibration violation of § 80.155(b) shall constitute a separate day of violation for every day a VAR equipment calibration requirement is not met.

§ 80.160 Exemptions.

(a) *Research, development, and testing exemptions.* Any detergent that is either in a research, development, or test status, or is sold to petroleum, automobile, engine, or component manufacturers for research, development, or test purposes, or any gasoline to be used by, or under the control of, petroleum, additive, automobile, engine, or component manufacturers for research, development, or test purposes, is exempted from the provisions of the interim detergent program, provided that:

(1) The detergent (or fuel containing the detergent), or the gasoline, is kept segregated from non-exempt product, and the party possessing the product maintains documentation identifying the product as research, development, or testing detergent or fuel, as applicable, and stating that it is to be used only for research, development, or testing purposes; and

(2) The detergent (or fuel containing the detergent), or the gasoline, is not sold, dispensed, or transferred, or offered for sale, dispensing, or transfer from a retail outlet. It shall also not be sold, dispensed, or transferred, or offered for sale, dispensing, or transfer from a wholesale purchaser-consumer facility, unless such facility is associated with detergent, fuel, automotive, or engine research, development or testing; and

(3) The party using the product for research, development, or testing purposes, or the party sponsoring this usage, notifies the EPA, on at least an annual basis and prior to the use of the product, of the purpose(s) of the program(s) in which the product will be used and the anticipated volume of the

product to be used. The information must be submitted to the address or fax number provided in §80.174(c).

(b) *Racing fuel and aviation fuel exemptions.* Any fuel that is refined, sold, dispensed, transferred, or offered for sale, dispensing, or transfer as automotive racing fuel or as aircraft engine fuel, is exempted from the provisions of this subpart, provided that:

(1) The fuel is kept segregated from non-exempt fuel, and the party possessing the fuel for the purposes of refining, selling, dispensing, transferring, or offering for sale, dispensing, or transfer as automotive racing fuel or as aircraft engine fuel, maintains documentation identifying the product as racing fuel, restricted for non-highway use in racing motor vehicles, or as aviation fuel, restricted for use in aircraft, as applicable;

(2) Each pump stand at a regulated party's facility, from which such fuel is dispensed, is labeled with the applicable fuel identification and use restrictions described in paragraph (b)(1) of this section; and

(3) The fuel is not sold, dispensed, transferred, or offered for sale, dispensing, or transfer for highway use in a motor vehicle.

(c) *California gasoline exemptions.* (1) Gasoline or PRC which is additized in the state of California is exempt from the VAR provisions in §§80.155(b) and (e) and 80.157, provided that:

(i) For all such gasoline or PRC, whether intended for sale within or outside of California, records of the type required for California gasoline (specified in title 13, California Code of Regulations, section 2257) are maintained; and

(ii) Such records, with the exception of daily additization records, are maintained for a period of five years from the date they were created and are delivered to EPA upon request.

(2) Gasoline or PRC that is transferred and/or sold solely within the state of California is exempt from the PTD provisions of the interim detergent program, specified in §§80.155(c) and 80.158.

(3) Nothing in this paragraph (c) exempts such gasoline or PRC from the requirements of §80.155(a) and (e), as applicable. EPA will base its determination of California gasoline's conformity with the detergent's LAC on the additization records required by CARB, or records of the same type.

[61 FR 35363, July 5, 1996]

§80.161 Detergent additive certification program.

(a) *Effective dates and applicability of requirements.* (1) As of July 1, 1997:

(i) Detergent additives for the control of port fuel injector deposits (PFID) and/or intake valve deposits (IVD) in gasoline engines may not be transferred or sold for use in compliance with this subpart unless such additives have been certified according to the requirements of this section.

(ii) Except as provided in §80.169(c)(8), PFID and IVD control additives may not be added to gasoline or post-refinery component (PRC) for compliance with this subpart unless such additives have been certified according to the requirements of this section.

(iii) Gasoline may not be sold or transferred to a party who sells or transfers gasoline to the ultimate consumer unless such gasoline contains detergent additives which have been certified according to the requirements of this section.

(2) Beginning August 1, 1997, all gasoline sold or transferred to the ultimate consumer must contain detergent additive(s) which have been certified, according to the requirements of this section, to be effective for the control of PFID and IVD in gasoline engines.

(3) Except as specifically exempted in §80.173, these detergency requirements apply to all gasoline, whether intended for on-highway or nonroad use, including conventional, oxygenated, reformulated, and leaded gasolines, as well as the gasoline component in mixtures of petroleum and alcohol fuels, gasoline used as marine fuel, gasoline service accumulation fuel (as described in §86.113–94(a)(1) of this chapter), the gasoline component of fuel mixtures of petroleum and methanol used for service accumulation in flexible fuel vehicles (as described in §86.113–94(d) of this chapter), the gasoline used for factory fill purposes, and all additized PRC.

(4) The specific controls and prohibitions applicable to persons subject to

these regulations are set forth in § 80.168.

(b) *Detergent additive certification requirements.* For a detergent additive package to be certified as eligible for use by detergent blenders in complying with the gasoline detergency requirements of this subpart, the requirements listed in this paragraph (b) must be satisfied for such detergent. Subject to the provisions of paragraph (e) of this section, if the certifier fails to conduct the specified tests or to submit the specified materials, or if EPA judges the testing or materials to be inadequate, or if the detergent fails EPA confirmatory deposit control performance testing pursuant to § 80.167, the Administrator may deny or withdraw the detergent's eligibility to be used to satisfy the detergency requirements of this subpart.

(1) The detergent additive manufacturer must properly register the detergent additive under 40 CFR part 79. For this purpose:

(i) The compositional data required under § 79.21(a) of this chapter shall include the information specified in § 80.162.

(ii) The minimum recommended additive concentration required under § 79.21(d) of this chapter shall be reported to EPA in units of gallons of detergent additive package per 1000 gallons of gasoline or PRC, provided to four digits. This concentration is the lowest additive concentration (LAC) referred to in § 80.170, and shall be reported as follows:

(A) For a detergent additive registered for use in unleaded gasoline, the minimum concentration must be determined and reported for each certification option under which the manufacturer wishes to certify the additive pursuant to § 80.163.

(*1*) In the case of a detergent certified for use in California gasoline based on an existing certification granted by the California Air Resources Board (CARB), pursuant to § 80.163(d), the minimum recommended concentration must equal or exceed the amount specified in the CARB certification.

(*2*) In the case of any other detergent certification option, the minimum recommended concentration must equal or exceed the amount mixed into the associated test fuel specified in § 80.164, which was shown to satisfy the PFID and IVD deposit control performance tests and standards specified in § 80.165.

(B) For a detergent registered for use in leaded gasoline, the minimum recommended concentration must be no less than the amount shown to be needed for control of carburetor deposits, pursuant to the test procedure and test fuel guidelines in § 80.166.

(C) Once it has been registered by EPA, the minimum recommended concentration specified by a detergent manufacturer to detergent blenders and other users of the additive, pursuant to paragraph (c) of this section, may not be changed without first notifying EPA. Such notification should be sent by certified mail to the address specified in § 80.174(b). The change in minimum concentration must be supported by existing certification data or else the notification to EPA must be accompanied by new certification information which demonstrates that the modification is consistent with the requirements of paragraphs (b)(1)(ii)(A) and (B) of this section.

(D) A manufacturer may use a single set of certification test data to demonstrate the deposit control effectiveness of more than one registered detergent additive product, provided that:

(*1*) The additive products contain all of the same detergent-active components and no detergent-active components other than those contained in common; and

(*2*) The minimum concentration recommended for the use of each such additive product is specified such that, when each additive product is mixed in gasoline at the recommended concentration, each of its detergent-active components will be present at a final concentration no less than the lowest concentration of that component which was present when the tested additive product met the PFID and IVD performance standards specified in § 80.165.

(2) The detergent additive manufacturer (or other certifying party) must submit to EPA a sample of the actual detergent additive package which was used in the certification testing specified in § 80.164 or, if such sample is not available, then a sample which has the

same composition as the package used in certification testing.

(i) The sample volume shall be between 250 ml and 500 ml.

(ii) The sample shall be packaged in a container which has a resealable closure and which will maintain sample integrity for at least one year. The container shall be labeled with the name and address of the manufacturer and the name of the detergent additive package.

(iii) Any known shelf life limitations, and any available information on optimal temperature, light exposure, or other conditions to prolong sample shelf life, shall be provided.

(iv) If the certifying party wishes to claim that the sample or any accompanying documents are entitled to special handling for reasons of business confidentiality, the party must clearly identify the sample or documents as such. EPA will handle any samples or documents with such claims according to the regulations at 40 CFR part 2.

(v) The sample shall be submitted to EPA, at the address provided in §80.174(a), within seven days of the date on which the certification letter for the detergent package is sent to EPA as required by paragraph (b)(3) of this section.

(3) The detergent additive manufacturer (or other certifying party) shall submit a certification letter for the detergent additive package to the address in §80.174(b). The party must use certified or express mail with return receipt service. The letter shall be signed by a person legally authorized to represent the certifying party and shall contain the following information:

(i) Identifying information.

(A) The name and address of the detergent additive manufacturer.

(B) In any case where the certifier is not the detergent additive manufacturer, such as in the case of a fuel-specific certification pursuant to §80.163(c), the name and address of the certifier.

(C) The commercial identifying name of the detergent additive product as registered under the requirements of §79.21 of this chapter.

(ii) A statement attesting that:

(A) The detergent package which is the subject of this certification has been tested according to applicable procedural and test fuel requirements in this subpart and has met the applicable performance standards; and

(B) The testing was conducted in a manner consistent with good engineering practices; and

(C) Complete documentation of the test fuel formulation and IVD demonstration procedures, detergent performance test procedures, and test results are available for EPA's inspection upon request.

(iii) The name and location of the laboratory(ies) at which the certification testing was conducted and the dates during which the testing was conducted.

(iv) For each option under which certification is sought pursuant to §80.163, specifications of the test fuel(s) in which the detergent underwent performance testing. These fuel specifications must include:

(A) The sulfur content in weight percent.

(B) The T–90 distillation point in degrees Fahrenheit.

(C) The olefin content in volume percent.

(D) The aromatic content in volume percent.

(E) The identity and volume percent of any oxygenate compound.

(F) The source of the test fuel(s) and/or fuel blend stocks used to formulate the test fuel(s).

(v) In the case of a national or PADD certification (pursuant to §80.163 (a) or (b)) for which the test fuel was specially formulated from refinery blend stocks, the results of the IVD demonstration test, pursuant to §80.164(b)(3).

(vi) In the case of a fuel-specific detergent certification, pursuant to §80.163(c), the definition of the segregated gasoline pool, including any permitted PRC, for which the certification is sought, and the fuel parameter percentile distributions determined for the subject gasoline pool, as specified in §80.164(c). The percentile distributions must include all of the fuel parameters listed in paragraph (b)(3)(iv) (A) through (D) of this section, along with any other fuel parameter(s) which the certifier wishes to use to define the certification fuel. As

specified in § 80.164(c)(1)(iv), the procedures used to measure the additional parameters must be identified, as well as the levels of these additional parameters present in the test fuel(s).

(vii) In the case of a certification for California gasoline based on an existing certification granted by CARB, pursuant to § 80.163(d), a copy of the CARB certificate.

(viii) The test concentration(s) of the subject detergent additive in each test fuel, and the corresponding test results (percent flow restriction demonstrated in the PFID test and milligrams of deposit per valve demonstrated in the IVD test).

(ix) For each option under which certification of the detergent is sought, the minimum recommended concentration which the certifying party seeks to establish for the detergent additive package, pursuant to paragraph (b)(1)(ii) of this section.

(4) EPA will acknowledge receipt of the detergent certification letter. The effective date of certification will be the sooner of 60 days from the date on which EPA receives the certification letter, or the certifier's receipt of EPA's acknowledgement of the certification letter. However, neither the passage of 60 days nor EPA's acknowledgement will signify acceptance by EPA of the validity of the information in the certification letter or the adequacy or potency of the detergent sample submitted pursuant to paragraph (b)(2) of this section. EPA may elect at any time to review the detergent certification data, analyze the submitted detergent additive sample, or subject the detergent additive package to confirmatory testing as described in § 80.167 and, where appropriate, may disqualify a detergent certification according to the provisions in paragraph (e) of this section.

(c) The minimum concentration reported in the detergent registration according to the provisions of paragraph (b)(1)(ii) of this section, plus any restrictions in use associated with that concentration, must be accurately communicated in writing by the additive manufacturer to each fuel manufacturer or detergent blender who purchases the subject detergent for purpose of compliance with the gasoline detergency requirements of this subpart, and to any additive manufacturer who purchases the subject additive with the intent of reselling it to a fuel manufacturer for this purpose.

(d) The rate at which a detergent blender treats gasoline with a detergent additive package must be no less than the minimum recommended concentration reported for the subject detergent additive pursuant to paragraph (b)(1)(ii) of this section, except under the following conditions:

(1) If a detergent blender possesses deposit control performance test results as specified in § 80.165 or § 80.166 which show that the minimum treat rate recommended by the manufacturer of a detergent additive product exceeds the amount of that detergent actually required for effective deposit control, then, upon informing EPA in writing of these circumstances, the detergent blender may use the detergent at the lower concentration substantiated by these test results.

(2) The notification to EPA must clearly specify the name of the detergent product and its manufacturer, the concentration recommended by the detergent manufacturer, and the lower concentration which the detergent blender intends to use. The notification must also attest that the required data are available to substantiate the deposit control effectiveness of the detergent at the intended lower concentration. The notification must be sent by certified mail to the address specified in § 80.174(b).

(3) At its discretion, EPA may require that the detergent blender submit the test data purported to substantiate the claimed effectiveness of the lower concentration of the detergent additive. In addition, EPA may require the manufacturer of the subject detergent additive to submit test data substantiating the minimum recommended concentration specified in the detergent additive registration. In either case, EPA will send a letter to the appropriate party; the supporting data will be due to EPA within 30 days of receipt of EPA's letter.

(i) If the detergent blender fails to submit the required supporting data to EPA in the allotted time period, or if EPA judges the submitted data to be

inadequate to support the detergent blender's claim that the lower concentration provides a level of deposit control consistent with the requirements of this section, then EPA will disapprove the use of the detergent at the lower concentration. Further, the detergent blender may be subject to applicable liabilities and penalties pursuant to §§ 80.169 and 80.172 for any gasoline or PRC it has additized at the lower concentration.

(ii) If the detergent manufacturer fails to submit the required test data to EPA within the allotted time period, EPA will proceed on the assumption that data are not available to substantiate the minimum recommended concentration specified in the detergent registration, and the subject additive may be disqualified for use in complying with the requirements of this subpart, pursuant to the procedures in paragraph (e) of this section. The detergent manufacturer may also be subject to applicable liabilities and penalties in §§ 80.169 and 80.172.

(iii) If both parties submit the required information, EPA will evaluate the quality and results of both sets of test data, and will either approve or disapprove the use of the lower treat rate submitted by the detergent blender. EPA will inform both parties of the results of its analysis.

(e) *Disqualification of a detergent additive package.* (1) When EPA makes a preliminary determination that a detergent additive certifier has failed to comply with the detergent certification requirements of this section, including a failure to submit required materials for a detergent additive or submission of materials which EPA deems inadequate, or if a detergent additive fails confirmatory testing conducted pursuant to § 80.167, EPA shall notify the additive certifier by certified mail, return receipt requested, setting forth the basis for that determination and informing the certifier that the detergent may lose its eligibility to be used to comply with the detergency requirements of this section.

(2) If EPA determines that the detergent certification was created by fraud or other misconduct, such as a negligent disregard for the truthfulness or accuracy of the required information, the detergent certification will be considered void *ab initio* and the disqualification will be retroactive to July 1, 1997 or the date on which the additive product was first certified, whichever is later.

(3) The certifier will be afforded 60 days from the date of receipt of the notice of intent of detergent disqualification to submit written comments concerning the notice, and to demonstrate or achieve compliance with the specific requirements which provide the basis for the proposed disqualification. If the certifier does not respond in writing within 60 days from the date of receipt of the notice of intent of disqualification, the detergent disqualification shall become final and the Administrator shall notify the certifier of such final disqualification order. If the certifier responds in writing within 60 days from the date of receipt of the notice of intent to disqualify, the Administrator shall review and consider all comments submitted by the certifier before taking final action concerning the proposed disqualification. All correspondence regarding a disqualification must be sent to the address provided in § 80.174(b).

(4) As part of a written response to a notice of intent to disqualify, a certifier may request an informal hearing concerning the notice. Any such request shall state with specificity the information the certifier wishes to present at such a hearing. If an informal hearing is requested, EPA shall schedule such a hearing within 90 days from the date of receipt of the request. If an informal hearing is held, the subject matter of the hearing shall be confined solely to whether or not the certifier has complied with the specific requirements which provide the basis for the proposed disqualification. If an informal hearing is held, the designated presiding officer may be any EPA employee, the hearing procedures shall be informal, and the hearing shall not be subject to or governed by 40 CFR part 22 or by 5 U.S.C. 554, 556, or 557. A verbatim transcript of each informal hearing shall be kept and the Administrator (or designee) shall consider all relevant evidence and arguments presented at the hearing in making a final

decision concerning a proposed disqualification.

(5) If a certifier who has received a notice of intent to disqualify submits a timely written response, and the Administrator (or designee) decides after reviewing the response and the transcript of any informal hearing to disqualify the detergent for use in complying with the requirements of this subpart, the Administrator (or designee) shall issue a final disqualification order and forward a copy of the disqualification order to the certifier by certified mail. Notice of the disqualification order will also be published in the FEDERAL REGISTER. The disqualification will become effective as of the date on which the copy of the order is received by the certifier. If the certifier is also a blender of the disqualified additive, then the certifier must stop using the ineligible detergent upon receipt of the disqualification order.

(6) Within 10 days of receipt of EPA's notification of the final decision to disqualify a detergent additive package pursuant to this paragraph (e), the detergent certifier must submit to EPA, at the address specified in § 80.174(b), a list of its customers who use the disqualified detergent. Failure to do so may subject the certifier to liabilities for violations of § 80.168 that result from the use of the uncertified detergent. EPA shall inform the certifier's customers by certified mail that the detergent is no longer eligible for compliance with the requirements of this subpart. These parties must stop using the ineligible detergent additive package and substitute an eligible detergent additive within 45 days of receiving the notification, or within 45 days of publication of the disqualification notice in the FEDERAL REGISTER, whichever occurs sooner.

[61 FR 35364, July 5, 1996, as amended at 61 FR 58747, Nov. 18, 1996]

§ 80.162 Additive compositional data.

For a detergent additive product to be eligible for use by detergent blenders in complying with the gasoline detergency requirements of this subpart, the compositional data to be supplied to EPA by the additive manufacturer for the purpose of registering a detergent additive package under § 79.21(a) of this chapter must include the items listed in this section. In the case of items requiring measurement or other technical analysis, and for which a specific test procedure is not stipulated herein, the procedure must conform to reasonable and customary standards of repeatability and reproducibility, and reasonable and customary limits of detection and accuracy for the type of test procedure or analytic procedure in question. At EPA's request, detailed documentation of any such test procedure must be submitted within 10 days of the registrant's receipt of EPA's request.

(a) A complete listing of the components of the detergent additive package and the weight and/or volume percent (as applicable) of each component of the package.

(1) When possible, standard chemical nomenclature shall be used or the chemical structure of the component shall be given. Polymeric components may be reported as the product of other chemical reactants, provided that the supporting data specified in paragraph (b) of this section is also reported.

(2) Each detergent-active component of the package shall be classified into one of the following designations:

(i) Polyalkyl amine;

(ii) Polyether amine;

(iii) Polyalkylsuccinimide;

(iv) Polyalkylaminophenol;

(v) Detergent-active petroleum-based carrier oil;

(vi) Detergent-active synthetic carrier oil; and

(vii) Other detergent-active component (identify category, if feasible.)

(3) Composition variability.

(i) The composition of a detergent additive reported in a single additive registration (and the detergent additive product sold under a single additive registration) may not:

(A) Include detergent-active components which differ in identity from those contained in the detergent additive package at the time of certification testing; or

(B) Include a range of concentration for any detergent-active component such that, if the component were

present in the detergent additive package at the lower bound of the reported range, the deposit control effectiveness of the additive package would be reduced as compared with the level of effectiveness demonstrated during certification testing.

(ii) The identity or concentration of non-detergent-active components of the detergent additive package may vary under a single registration, provided that the range of such variation is specified in the registration and that such variability does not reduce the deposit control effectiveness of the additive package as compared with the level of effectiveness demonstrated during certification testing.

(iii) Except as provided in paragraph (a)(3)(iv) of this section, detergent additive packages which do not satisfy the restrictions in this paragraph (a)(3) must be separately registered. EPA may disqualify an additive for use in satisfying the requirements of this subpart if EPA determines that the variability included within a given detergent additive registration may reduce the deposit control effectiveness of the detergent package such that it may invalidate the minimum recommended concentration reported in accordance with the applicable requirements of §80.161(b)(1)(ii).

(iv) A change in minimum concentration requirements resulting from a modification of detergent additive composition shall not require a new detergent additive registration or a change in existing registration if:

(A) The modification is effected by a detergent blender only for its own use or for the use of parties which are subsidiaries of, or share common ownership with, the blender, and the modified detergent is not sold or transferred to other parties; and

(B) The modification is a dilution of the additive for the purpose of ensuring proper detergent flow in cold weather; and

(C) Gasoline is the only diluting agent used; and

(D) The diluted detergent is subsequently added to gasoline at a rate that attains the detergent's registered minimum recommended concentration, taking into account the dilution; and

(E) EPA is notified, either before or within seven days after the dilution action, of the identity of the detergent, the identity of the diluting material, the amount or percentage of the dilution, the change in treat rate necessitated by the dilution, and the locations and time period of diluted detergent usage. The notification shall be sent or faxed to the address in §80.174(c).

(b) For detergent-active polymers and detergent-active carrier oils which are reported as the product of other chemical reactants:

(1) Identification of the reactant materials and the manufacturer's acceptance criteria for determining that these materials are suitable for use in synthesizing detergent components. The manufacturer must maintain documentation, and submit it to EPA upon request, demonstrating that the acceptance criteria reported to EPA are the same criteria which the manufacturer specifies to the suppliers of the reactant materials.

(2) A Gel Permeation Chromatograph (GPC), providing the molecular weight distribution of the polymer or detergent-active carrier oil components and the concentration of each chromatographic peak representing more than one percent of the total mass. For these results to be acceptable, the GPC test procedure must include equipment calibration with a polystyrene standard or other readily attainable and generally accepted calibration standard. The identity of the calibration standard must be provided, together with the GPC characterization of the standard.

(c) For non-detergent-active carrier oils, the following parameters:

(1) T10, T50, and T90 distillation points, and end boiling point, measured according to applicable test procedures cited in §80.46.

(2) API gravity and viscosity

(3) Concentration of oxygen, sulfur, and nitrogen, if greater than or equal to 0.5 percent (by weight) of the carrier oil

(d) Description of an FTIR-based method appropriate for identifying the detergent additive package and its detergent-active components (polymers,

carrier oils, and others) both qualitatively and quantitatively, together with the actual infrared spectra of the detergent additive package and each detergent-active component obtained by this test method.

(e) To provide a basis for establishing an affirmative defense to presumptive liability pursuant to § 80.169(c)(4)(i)(D)(*2*)(*i*), specific physical parameters must be identified which the manufacturer considers adequate and appropriate, in combination with other information and sampling requirements under this subpart, for identifying the detergent additive package and monitoring its production quality control.

(1) Such parameters shall include (but need not be limited to) viscosity, density, and basic nitrogen content, unless the additive manufacturer specifically requests, and EPA approves, the substitution of other parameter(s) which the manufacturer considers to be more appropriate for a particular additive package. The request must be made in writing and must include an explanation of how the requested physical parameter(s) are helpful as indicator(s) of detergent production quality control. EPA will respond to such requests in writing; the additional parameters are not approved until the certifier receives EPA's written approval.

(2) The manufacturer shall identify a standardized measurement method, consistent with the chemical and physical nature of the detergent product, which will be used to measure each parameter. The documented ASTM repeatability for the method shall also be cited. The manufacturer's target value for each parameter in the detergent package, and the expected range of production values for each parameter, shall be specified.

(3) EPA will consider the parameter measurements to be an acceptable basis for establishing an affirmative defense to presumptive liability, if the expected range of variability differs from the target value by an amount no greater than five times the standard repeatability of the test procedure, or by no more than 10 percent of the target value, whichever is less. However, in the case of nitrogen analysis or other procedures for measuring concentrations of specific chemical compounds or elements, when the target value is less than 10 parts per million, a range of variability up to 50 percent of the target value will be considered acceptable.

(4) If a manufacturer wishes to rely on measurement methods or production variability ranges which do not conform to the above limitations, then the manufacturer must receive prior written approval from EPA in order to be assured that any related parameter measurements will be considered an acceptable basis for establishing an affirmative defense. A request for such allowance must be made in writing. It must fully justify the adequacy of the test procedure, explain why a broader range of variability is required, and provide evidence that the production detergent will perform adequately throughout the requested range of variability.

[61 FR 35366, July 5, 1996]

§ 80.163 Detergent certification options.

To be used to satisfy the detergency requirements under § 80.161(a), a detergent additive must be certified in accordance with the requirements of one or more of the options and suboptions described in this section. Where a certification option makes an additive eligible for use in a particular gasoline, that additive is also eligible for use in PRC which will be added to the particular gasoline. Under each option, the lowest additive concentration (LAC) or minimum recommended concentration registered for a detergent additive package, pursuant to § 80.161(b)(1)(ii), must equal or exceed the lowest detergent treat rate shown to be needed in the designated test fuel in order to meet the deposit control performance requirements specified in § 80.165.

(a) *National certification.* A detergent certified under a national certification option is eligible for use in gasoline which can be sold or dispensed anywhere within the United States or its territories (subject to approved state programs).

(1) *National generic certification option.* To be certified under this option, a

candidate detergent must meet the deposit control performance test requirements and standards specified in § 80.165 using test fuels that conform to the requirements in § 80.164(b)(1), Table 1, Line 1. A detergent certified under this option is eligible to be used at a conforming LAC in any grade of gasoline, with or without an oxygenate component.

(i) *National nonoxygenate suboption.* The requirements for certification under this suboption are the same as those in paragraph (a)(1) of this section, except that, pursuant to § 80.164(a)(2)(ii), the certification test fuel shall contain no ethanol or other oxygenate. A detergent certified under this suboption is eligible to be used at a conforming LAC only in gasoline that does not contain an oxygenate component.

(ii) *National oxygenate-specific suboption.* The requirements for certification under this suboption are the same as those in paragraph (a)(1) of this section, except that, pursuant to § 80.164(a)(2)(iii), the certification test fuel shall contain an oxygenate compound other than ethanol. A detergent certified under this suboption is eligible to be used at a conforming LAC only in gasoline that contains no oxygenate component other than the one present in the test fuel.

(2) *National premium certification option.* To be certified under this option, a candidate detergent must meet the deposit control performance test requirements and standards specified in § 80.165 using test fuels that conform to the requirements in § 80.164(b)(1), Table 1, Line 2. A detergent certified under this option is eligible to be used at a conforming LAC only in premium grade gasoline, with or without an oxygenate component.

(i) *National premium nonoxygenate suboption.* The requirements for certification under this suboption are the same as those in paragraph (a)(2) of this section, except that, pursuant to § 80.164(a)(2)(ii), the certification test fuel shall contain no ethanol or other oxygenate. A detergent certified under this suboption is eligible to be used at a conforming LAC only in premium grade gasoline that does not contain an oxygenate component.

(ii) *National premium oxygenate-specific suboption.* The requirements for certification under this suboption are the same as those in paragraph (a)(2) of this section, except that, pursuant to § 80.164(a)(2)(iii), the certification test fuel shall contain an oxygenate compound other than ethanol. A detergent certified under this suboption is eligible to be used at a conforming LAC only in gasoline that is premium grade and contains no oxygenate component other than the one present in the test fuel.

(b) *Petroleum Administrative Defense District (PADD) Certification.* A detergent certified under a PADD certification option is eligible for use in gasoline which can be sold or dispensed to the ultimate purchaser, or to those parties who sell or dispense to the ultimate consumer, only within the PADD for which the certification was granted. The states and jurisdictions included within each PADD are specified in § 79.59(b)(3)(i) through (v), except that, for purposes of PADD certification, the state of California is excluded from PADD V.

(1) *PADD generic certification option.* To be certified under this option, a candidate detergent must meet the deposit control performance test requirements and standards specified in § 80.165 using test fuels that conform to the requirements in § 80.164(b)(1), Table 2, for a selected PADD. A detergent certified under this option is eligible to be used at a conforming LAC in any grade of gasoline, with or without an oxygenate component, provided that the gasoline is ultimately dispensed in the selected PADD.

(i) *PADD nonoxygenate suboption.* The requirements for certification under this suboption are the same as those in paragraph (b)(1) of this section, except that, pursuant to § 80.164(a)(2)(ii), the certification test fuel shall contain no ethanol or other oxygenate. A detergent certified under this suboption is eligible to be used at a conforming LAC only in gasoline that is nonoxygenated and is ultimately dispensed in the selected PADD.

(ii) *PADD oxygenate-specific suboption.* The requirements for certification under this suboption are the same as

those in paragraph (b)(1) of this section, except that, pursuant to § 80.164(a)(2)(iii), the certification test fuel shall contain an oxygenate compound other than ethanol. A detergent certified under this suboption is eligible to be used at a conforming LAC only in gasoline that contains no oxygenate component other than the one present in the test fuel and is ultimately dispensed in the selected PADD.

(2) *PADD premium certification option.* To be certified under this option, a candidate detergent must meet the deposit control performance test requirements and standards specified in § 80.165 using test fuels that conform to the requirements in § 80.164(b)(1), Table 2, for a selected PADD. A detergent certified under this option is eligible to be used at a conforming LAC only in gasoline that is premium grade (with or without an oxygenate component) and is ultimately dispensed in the selected PADD.

(i) *PADD premium nonoxygenate suboption.* The requirements for certification under this suboption are the same as those in paragraph (b)(2) of this section, except that, pursuant to § 80.164(a)(2)(ii), the certification test fuel shall contain no ethanol or other oxygenate. A detergent certified under this suboption is eligible to be used at a conforming LAC only in gasoline that is premium grade, contains no oxygenate component, and is ultimately dispensed in the selected PADD.

(ii) *PADD premium oxygenate-specific suboption.* The requirements for certification under this suboption are the same as those in paragraph (b)(2) of this section, except that, pursuant to § 80.164(a)(2)(iii), the certification test fuel shall contain an oxygenate compound other than ethanol. A detergent certified under this suboption is eligible to be used at a conforming LAC only in gasoline that is premium grade, contains no oxygenate component other than the one present in the test fuel, and is ultimately dispensed in the selected PADD.

(c) *Fuel-specific certification.* Except as provided in paragraph (c)(3) of this section, to be certified under the fuel-specific certification option, a candidate detergent must meet the deposit control performance test requirements and standards specified in § 80.165 using test fuels that conform to the requirements of § 80.164(c).

(1) A detergent certified under this option is eligible to be used at a conforming LAC only in the defined gasoline pool reported in the certification letter pursuant to § 80.161(b)(3).

(i) The gasoline pool may only include gasoline produced or distributed from the facilities covered by the fuel survey which was used to define the fuel-specific certification test fuels, pursuant to § 80.164(c)(1).

(ii) The gasoline pool must be kept segregated from any other gasoline prior to blending with the detergent additive.

(iii) Depending on the oxygenate components added to the test fuel pursuant to § 80.164(a)(2), the gasoline pool may be inclusive of all grades and all oxygenate blending characteristics (i.e., generic), or may be restricted to non-oxygenated gasoline, or to gasoline containing a specific oxygenate compound. The certification may also be restricted to premium grade gasoline. Any such use restrictions must be specified in the certification letter. Provisions in §§ 80.168 and 80.171(a)(9) through (12) related to such use restrictions also apply.

(2) Detergent certification under this option entails special initial and annual reporting requirements, specified under §§ 80.161(b)(3)(vi) and 80.164(c)(3), which necessitate that the responsible party have control over and access to the segregated gasoline pool for which the detergent is certified. For this reason, the certifying party under this option is likely to be (but is not required to be) a fuel manufacturer or detergent blender, rather than the additive manufacturer.

(3) If a certifier demonstrates that the required test fuel representing a segregated pool of gasoline meets the deposit control performance standards specified in § 80.165 in the absence of a detergent additive, or using a detergent additive which has only PFID-control activity, then this gasoline pool (and PFID detergent, if applicable) can be certified accordingly under the fuel-specific option.

(4) Gasoline properly additized with a detergent certified under the fuel-specific option may be transferred or sold anywhere within the United States and its territories (subject to approved state programs).

(d) *CARB-Based Certification.* A valid certification under section 2257 of Title 13, California Code of Regulations (CARB certification) may be the basis for a certification under the following restrictions and conditions:

(1) A detergent certified under this option may be used at the LAC specified in the CARB certification only in gasoline that meets the requirements of California Phase II reformulated gasoline (pursuant to Title 13, Chapter 5, Article 1, Subarticle 2, California Code of Regulations, Standards for Gasoline Sold Beginning March 1, 1996). The grade(s) of California gasoline which may be so additized, and the oxygenate(s) which may be present, are as specified in the CARB certification for the detergent in question.

(2) The gasoline must be either: Additized in California; or sold or dispensed to the ultimate consumer in California (or to parties who sell or dispense to the ultimate consumer in California); or both additized and ultimately dispensed in California.

(3) A certification under this option will continue to be valid only as long as the CARB certification remains valid. The certifier must cease selling or using a detergent immediately upon being notified by CARB that the CARB certification for this detergent has been invalidated, and must notify EPA within 7 days of receipt of this notification.

[61 FR 35368, July 5, 1996]

§80.164 Certification test fuels.

(a) *General requirements.* This section provides specifications for the test fuels required in conjunction with the certification options described in §80.163. For each such certification option, the associated test fuel must meet or exceed the levels of four basic fuel parameters (aromatics, fuel sulfur, olefins, and T–90) prescribed here and may also contain specified oxygenate compounds. In addition, pursuant to paragraph (b)(3) of this section, some fuels must undergo an IVD demonstration test before they are eligible to be used as test fuels under this certification program. Test fuel characteristics must be reported to EPA in the detergent certification letter required pursuant to §80.161(b)(3).

(1) Quantitative specifications for the four basic fuel parameters, provided in paragraphs (b) and (c) of this section, refer to the levels of these parameters in the base gasoline prior to the addition of any oxygenate. The levels of the basic fuel parameters must be measured in accordance with applicable procedures in §80.46.

(2) Oxygenate components of certification test fuels must be of fuel grade quality. The type and amount of oxygenate to be blended into the test fuel (if any) shall be as follows:

(i) To certify a detergent for generic use (i.e., for use in gasoline containing any oxygenate compound, as well as for use in nonoxygenated gasoline), the finished test fuel shall contain ethanol at 10 volume percent.

(ii) To certify a detergent specifically for use in nonoxygenated gasoline, no oxygenate compounds shall be added to the test fuel.

(iii) To certify a detergent specifically for use in gasoline blended with a specified oxygenate compound other than ethanol, the specified oxygenate must be added to the test fuel in an amount such that the finished fuel contains the oxygenate at the highest concentration at which the specific oxygenate may be used in in-use gasoline.

(3) No detergent-active substance other than the detergent additive package undergoing testing may be added to a certification test fuel. Typical nondetergent additives, such as antioxidants, corrosion inhibitors, and metal deactivators, may be present in the test fuel at the discretion of the additive certifier. In addition, any nondetergent additives (other than oxygenate compounds) which are commonly blended into gasoline and which are known or suspected to affect IVD or PFID formation, or to reduce the ability of the detergent in question to control such deposits, should be added to the test fuel for certification testing.

(4) Certification test requirements may be satisfied for a detergent additive using more than one batch of test fuel, provided that each batch satisfies all applicable test fuel requirements under this section.

(5) Unless otherwise required by this section, finished test fuels must conform to the requirements for commercial gasoline described in ASTM D 4814–95c, ''Standard Specification for Automotive Spark-IgnitionEngine Fuel'', which is incorporated by reference. This incorporation by reference was approved by the Director of the Federal Register in accordance with 5 U.S.C. 552(a) and 1 CFR part 51. Copies may be inspected at U.S. EPA, OAR, 401 M Street, Southwest, Washington, DC 20460, or at the Office of the Federal Register, 800 North Capitol Street, NW., suite 700, Washington, DC. Copies of this material may be obtained from ASTM, 1916 Race St., Philadelphia, PA 19103.

(b) National and PADD certification test fuels.

(1) Test fuels for the national generic and premium certification options must contain levels of the designated fuel parameters which meet or exceed the applicable values in Table 1. Test fuels for the PADD generic certification options must contain levels of the designated fuel parameters which meet or exceed the applicable values in Table 2. Test fuels for the PADD premium certification options must contain levels of the designated fuel parameters which meet or exceed the applicable values in Table 3. Oxygenate requirements for the respective non-oxygenate and oxygenate-specific sub-options are specified in paragraph (a)(2) of this section.

TABLE 1.—NATIONAL CERTIFICATION TEST FUELS

Certification option	Required minimum fuel parameter values				
	Sulfur (weight %)	T–90 (F)	Olefins (volume %)	Aromatics (volume %)	Oxygenate (volume %)
1. National Generic	0.034	339	11.4	31.1	10% Ethanol.
2. National Premium	0.016	332	6.5	35.9	

TABLE 2.—PADD-SPECIFIC GENERIC CERTIFICATION TEST FUELS

Certification option	Required minimum fuel parameter values				
	Sulfur (weight %)	T–90 (F)	Olefins (volume %)	Aromatics (volume %)	Oxygenate (volume %)
PADD 1 Generic	0.039	343	15.4	32.1	
PADD 2 Generic	0.034	338	10.3	29.3	
PADD 3 Generic	0.032	343	12.9	29.8	10% Ethanol.
PADD 4 Generic	0.050	326	10.0	27.1	
PADD 5 Generic	0.021	337	7.6	34.5	

TABLE 3.—PADD-SPECIFIC PREMIUM-GRADE CERTIFICATION TEST FUELS

Certification option	Required minimum fuel parameter values				
	Sulfur (weight %)	T–90 (F)	Olefins (volume %)	Aromatics (volume %)	Oxygenate (volume %)
PADD 1 Premium	0.018	332	9.2	38.6	
PADD 2 Premium	0.014	333	6.0	34.3	
PADD 3 Premium	0.015	334	6.0	34.6	10% Ethanol.
PADD 4 Premium	0.040	319	6.0	22.3	
PADD 5 Premium	0.011	332	4.3	36.7	

(2) National and PADD certification test fuels must either be formulated to specification from normal refinery blend stocks, or drawn from finished gasoline supplies. The source of such samples must be normally-operating gasoline production or distribution facilities located in the U.S. Samples must not be drawn from a segregated gasoline pool that is or will be covered

by a fuel-specific certification under § 80.163(c) on the date when the certification information under this option is submitted to EPA.

(3) To be eligible for use in detergent additive certification testing, in addition to the specifications above, national and PADD test fuels which are specially formulated from refinery blend stocks must themselves undergo testing to demonstrate their deposit-forming tendency. For this purpose, the unadditized, nonoxygenated test fuel must be subjected to the IVD control test procedure described in § 80.165(b). At the discretion of the tester, the duration of the demonstration test may be less than 10,000 miles, provided the results satisfy the standard of this paragraph. In order to qualify for use in certification testing, the formulated fuel's test results must meet or exceed the values shown in Table 4 for the relevant certification option. If the demonstration test results do not meet these criteria, then the formulated fuel may not be used for detergent certification testing.

TABLE 4.—IVD DEMONSTRATION TEST CRITERIA

Certification option	Minimum required deposit level in IVD demonstration test (mg/valve, average)					
	National	PADD 1	PADD 2	PADD 3	PADD 4	PADD 5
Generic	290	290	260	290	260	260
Premium	260	260	235	260	235	235

(c) *Fuel-specific certification test fuels.* (1) Test fuels required for fuel-specific certification must contain levels of each of the four basic fuel parameters (aromatics, olefins, T–90, and fuel sulfur) at no less than their respective 65th percentile values in the segregated gasoline pool for which the detergent certification is sought in accordance with § 80.163(c). These values must be determined by the certifier as follows:

(i) At least once monthly for at least one complete year prior to the certification, the certifier must measure the levels of the required parameters in representative fuel samples contributed to the segregated gasoline pool by each participating refinery, terminal, or other fuel production or distribution facility. The fuel parameters must be measured in accordance with the test procedures in § 80.46. If the applicability of the fuel-specific certification is to be limited to premium gasoline, then the required fuel compositional data must be collected only from samples of premium gasoline.

(ii) The fuel composition survey results, weighted according to the percentage of gasoline contributed to the segregated gasoline pool from each participating facility, shall be used to construct a percentile distribution of the measured values for each of the fuel parameters.

(iii) Data from more than one year may be used to construct the required statistical distribution provided that only the total data from complete consecutive years is used and that all survey data must have been collected within three years of the date the certification information is submitted to EPA.

(iv) At the discretion of the certifier, other fuel parameters may be used to define the certification test fuels in addition to the four required parameters. To be taken into account by EPA in case of confirmatory testing pursuant to § 80.167, such additional parameters must be surveyed and analyzed according to the same requirements applicable to the four standard parameters. In addition, any optional parameters must be measured using test procedures which conform to reasonable and customary standards of repeatability and reproducibility, and reasonable and customary limits of detection and accuracy for the type of test procedure or analytic procedure in question.

(v) Using the percentile distributions calculated from the survey data for the four required parameters and any additional discretionary parameters, the 65th percentile value for each such parameter shall be determined. Prior to the addition of any oxygenate

compound, the fuel-specific certification test fuel shall contain each specified parameter at a level or concentration no less than this 65th percentile value. Test fuel oxygenate requirements for generic, nonoxygenate, and oxygenate-specific certification suboptions are specified in paragraph (a)(2) of this section.

(2) Fuel-specific certification test fuels must either be formulated to specification from the same refinery blend stocks which are normally used to blend the gasolines included in the subject gasoline pool, or drawn from the finished fuel supplies which contribute to this pool of gasoline. Fuel-specific certification test fuels need not undergo an IVD demonstration test prior to use in certification testing.

(3) The certifier must submit an annual report to EPA within 30 days of the anniversary of the initial certification effective date. Failure to submit the annual report by the required date will invalidate the fuel-specific certification and may subject the certifier to liability and penalties under §§ 80.169 and 80.172. The purpose of the annual report is to update the information on the composition of the segregated gasoline pool that was characterized by the initial fuel survey.

(i) For this purpose, the same fuel survey and statistical analysis requirements that were conducted pursuant to paragraphs (c)(1)(i),(ii), and (iv) of this section must be repeated, using data for the most current twelve-month period from each of the production/distribution facilities that contributed to the original fuel survey.

(ii) The annual report must present the percentile distributions for each fuel parameter as determined from the new survey data and, for each measured fuel parameter, must compare the newly determined 50th percentile value with the 60th percentile value for that parameter as determined in the original fuel survey.

(iii) If the new 50th percentile level for any fuel parameter is greater than or equal to the 60th percentile level reported in the initial certification, then the fuel-specific certification is no longer valid. In such instance, the certifier must immediately discontinue the sale and use of the subject detergent under the conditions of the fuel-specific certification and must immediately notify any downstream customers/recipients of the subject detergent that the certification is no longer valid and that their use of the detergent must discontinue within seven days. To avoid liability and penalties under §§ 80.169 and 80.172, the certifier must take these remedial steps within 45 days of the anniversary of the original fuel-specific certification. Downstream customers/recipients must discontinue usage of the detergent within seven days of receipt of notification of the detergent's invalidity to avoid such liability.

(4) The fuel composition survey results which support the original test fuel specifications and the annual statistical analyses, along with related documentation on test methods and statistical procedures, shall be retained by the certifier for a period of at least five years, and shall be made available to EPA upon request.

[61 FR 35369, July 5, 1996]

§ 80.165 Certification test procedures and standards.

This section specifies the deposit control test requirements and performance standards which must be met in order to certify detergent additives for use in unleaded gasoline, pursuant to § 80.161(b)(1)(ii)(A)(*2*). These standards must be met in the context of the specific test procedures identified in paragraphs (a) and (b) of this section, except as provided in paragraph (c) of this section. In any case, the testing must be conducted and the performance standards met when the subject detergent additive is mixed in a test fuel meeting all relevant requirements of § 80.164, including the deposit-forming tendency demonstration specified in § 80.164(b)(3), if applicable. Complete test documentation must be submitted by the certifying party within 30 days of receipt of a written request from EPA for such records.

(a) *Fuel injector deposit control testing.* (1) The required test fuel must produce no more than 5% flow restriction in any one injector when tested in accordance with ASTM D 5598–94, ''Standard Test Method for Evaluating Unleaded Automotive Spark-Ignition Engine

Fuel for Electronic Port Fuel Injector Fouling,'' 1994, which is incorporated by reference. This incorporation by reference was approved by the Director of the Federal Register in accordance with 5 U.S.C. 552(a) and 1 CFR part 51. Copies may be inspected at U.S. EPA, OAR, 401 M Street, Southwest, Washington, DC 20460, or at the Office of the Federal Register, 800 North Capitol Street, NW., suite 700, Washington, DC. Copies of this material may be obtained from ASTM, 1916 Race St., Philadelphia, PA 19103.

(2) At the option of the certifier, fuel injector flow may be measured at intervals during the 10,000 mile test cycle described in ASTM D 5598–94, in addition to the flow measurements required at the completion of the test cycle, but not more than every 1,000 miles.

(b) *Intake valve deposit control testing.* The required test fuel must produce the accumulation of less than 100 mg of intake valve deposits on average when tested in accordance with ASTM D 5500–94, ''Standard Test Method for Vehicle Evaluation of Unleaded Automotive Spark-Ignition Engine Fuel for Intake Valve Deposit Formation,'' 1994, which is incorporated by reference. This incorporation by reference was approved by the Director of the Federal Register in accordance with 5 U.S.C. 552(a) and 1 CFR part 51. Copies may be inspected at U.S. EPA, OAR, 401 M Street, Southwest, Washington, DC 20460, or at the Office of the Federal Register, 800 North Capitol Street, NW., suite 700, Washington, DC. Copies of this material may be obtained from ASTM, 1916 Race St., Philadelphia, PA 19103.

(c) If conducted using test fuels meeting all relevant requirements of §80.164, and completed prior to September 3, 1996, then the PFID and IVD control test procedures required for detergent certification in California (specified in section 2257 of Title 13, California Code of Regulations) will also be considered acceptable. California Air Resources Board, ''Test Method for Evaluating Port Fuel Injector (PFI) Deposits in Vehicle Engines'', March 1, 1991, and California Air Resources Board, ''BMW—10,000 Miles Intake Valve Test Procedure'', March 1, 1991, are incorporated by reference. This incorporation by reference was approved by the Director of the Federal Register in accordance with 5 U.S.C. 552(a) and 1 CFR part 51. Copies may be inspected at U.S. EPA, OAR, 401 M Street, Southwest, Washington, DC 20460, or at the Office of the Federal Register, 800 North Capitol Street, NW., suite 700, Washington, DC. Copies of this material may be obtained from the California Air Resource Board, Stationary Source Division, 2020 L Street, PO Box 2815, Sacramento, CA, 95814.

[61 FR 35371, July 5, 1996]

§80.166 Carburetor deposit control performance test and test fuel guidelines.

EPA will use the guidelines in this section to evaluate the adequacy of carburetor deposit control test data, used to support the minimum concentration recommended for detergents used in leaded gasoline pursuant to §80.161(b)(1)(ii)(B).

(a) *Carburetor Deposit Control Test Procedure and Performance Standard Guidelines.* For demonstration of carburetor deposit control performance, any generally accepted vehicle, engine, or bench test procedure and associated performance standard for carburetor deposit control will be considered adequate. Port and throttle body fuel injector deposit control test data will also be considered to be adequate demonstration of an additive's ability to control carburetor deposits. Examples of acceptable test procedures for demonstration of carburetor deposit control, in addition to the fuel injector test procedure listed in §80.165(a), are contained in the following references:

(1) ''Test Method for Evaluating Port Fuel Injector (PFI) Deposits in Vehicle Engines'', March 1, 1991, Section 2257, Title 13, California Code of Regulations.

(2) ''A Vehicle Test Technique for Studying Port Fuel Injector Deposits—A Coordinating Research Council Program'', Robert Tupa et al., SAE Technical paper No. 890213, 1989.

(3) ''The Effects of Fuel Composition and Additives on Multiport Fuel Injector Deposits'', Jack Benson et al., SAE Technical Paper Series No. 861533, 1986.

(4) ''Injector Deposits—The Tip of Intake System Deposit Problems'', Brian

Taneguchi, et al., SAE Technical Paper Series No. 861534, 1986.

(5) ''Fuel Injector, Intake Valve, and Carburetor Detergency Performance of Gasoline Additives'', C.H. Jewitt et al., SAE Technical Paper No. 872114, 1987.

(6) ''Carburetor Cleanliness Test Procedure, State-of-the-Art Summary, Report: 1973–1981'', Coordinating Research Council, CRC Report No. 529, Coordinating Research Council Inc. (CRC), 219 perimeter Center Parking, Atlanta, Georgia, 30346.

(b) *Carburetor Deposit Control Test Fuel Guidelines.* (1) The gasoline used in the tests described in paragraph (a) of this section must contain the detergent-active components of the subject detergent additive package in an amount which corresponds to the minimum recommended concentration recorded in the respective detergent registration, or less than this amount.

(2) The test fuel must not contain any detergent-active components other than those recorded in the subject detergent certification.

(3) The composition of the test fuel used in carburetor deposit control testing, conducted to support the claimed effectiveness of detergents used in leaded gasoline, should be reasonably typical of in-use gasoline in its tendency to form carburetor deposits (or more severe than typical in-use fuels) as defined by the olefin and sulfur content. A test fuel conforming to these compositional guidelines may be sampled directly from finished gasolines or may be blended to specification using typical refinery blend stocks. Test data using leaded fuels is preferred for this purpose, but data collected using unleaded fuels may also be acceptable provided that some correlation with additive performance in leaded fuels is available.

[61 FR 35372, July 5, 1996]

§ 80.167 Confirmatory testing.

EPA may test a detergent to confirm that the required performance levels are met. Based on the findings of this confirmatory testing, a detergent certification may be denied or revoked under the provisions of § 80.161(e).

(a) Confirmatory testing conducted to evaluate the validity of detergent certifications under the national, PADD, or fuel-specific options will generally entail a single vehicle test using the procedures detailed in § 80.165. The test fuel(s) used in conducting confirmatory certification testing will contain the specified fuel parameters at or below the minimum levels specified in § 80.164, and will otherwise conform to the applicable certification test fuel specifications therein.

(b) Confirmatory certification testing conducted to evaluate the validity of CARB-based detergent certifications will use the subject detergent in test fuel(s) containing the relevant fuel parameters at levels no greater than the maximum levels for which the CARB certification was granted. The test procedures will be conducted pursuant to the procedures specified under section 2257 of Title 13, California Code of Regulations.

(c) Confirmatory testing conducted to evaluate the validity of registration and certification information specific to detergent use in leaded gasoline will use the subject detergent in a test fuel containing the test fuel parameters at levels no greater than those prescribed in § 80.164. EPA will make all reasonable efforts to use the same test procedure for confirmatory testing purposes as was used by the certifier in conducting deposit control performance testing.

(d) When EPA decides to conduct confirmatory testing on a fuel or additive which is not readily available in the open market, EPA may request that the detergent certifier and/or manufacturer of such fuel or additive furnish a sample in the needed quantity. If testing is conducted to evaluate the validity of a detergent certification under the fuel-specific option, the detergent blender must supply EPA with test fuel, or with blend stocks with which to formulate such test fuel, in sufficient quantity to conduct the specified deposit control performance testing. The fuel or additive manufacturer shall comply with a sample request made pursuant to this paragraph within 30 days of receipt of the request.

[61 FR 35372, July 5, 1996]

§80.168 Detergent certification program controls and prohibitions.

(a)(1) No person shall sell, offer for sale, dispense, supply, offer for supply, transport, or cause the transportation of gasoline to the ultimate consumer for use in motor vehicles or in any off-road engines (except as provided in §80.173), or to a gasoline retailer or wholesale purchaser-consumer, and no person shall detergent-additize gasoline, unless such gasoline is additized in conformity with the requirements of §80.161. No person shall cause the presence of any gasoline in the gasoline distribution system unless such gasoline is additized in conformity with the requirements of §80.161.

(2) Gasoline has been additized in conformity with the requirements of §80.161 when the detergent component satisfies the requirements of §80.161 and when:

(i) The gasoline has been additized in conformity with the detergent composition and purpose-in-use specifications of a detergent certified in accordance with this subpart, and in accordance with at least the minimum concentration specifications of that detergent as certified or as otherwise provided under §80.161(d); or

(ii) The gasoline is composed of two or more commingled gasolines and each component gasoline has been additized in conformity with the detergent composition and purpose-in-use specifications of a detergent certified in accordance with this subpart, and in accordance with at least the minimum concentration specifications of that detergent as certified or as otherwise provided under §80.161(d); or

(iii) The gasoline is composed of a gasoline commingled with a post-refinery component (PRC), and both of these components have been additized in conformity with the detergent composition and use specifications of a detergent certified in accordance with this subpart, and in accordance with at least the minimum concentration specifications of that detergent as certified or as otherwise provided under §80.161(d).

(b) No person shall blend detergent into gasoline or PRC unless such person complies with the volumetric additive reconciliation requirements of §80.170.

(c) No person shall sell, offer for sale, dispense, supply, offer for supply, store, transport, or cause the transportation of any gasoline, detergent, or detergent-additized PRC, unless the product transfer document for the gasoline, detergent or detergent-additized PRC complies with the requirements of §80.171.

(d) No person shall refine, import, manufacture, sell, offer for sale, dispense, supply, offer for supply, store, transport, or cause the transportation of any detergent that is to be used as a component of detergent-additized gasoline or detergent-additized PRC unless such detergent conforms with the composition specifications of a detergent certified in accordance with this subpart and the detergent otherwise complies with the requirements of §80.161. No person shall cause the presence of any detergent in the detergent, PRC, or gasoline distribution systems unless such detergent complies with the requirements of §80.161.

(e)(1) No person shall sell, offer for sale, dispense, supply, offer for supply, transport, or cause the transportation of detergent-additized PRC unless the PRC has been additized in conformity with the requirements of §80.161. No person shall cause the presence in the PRC or gasoline distribution systems of any detergent-additized PRC that fails to conform to the requirements of §80.161.

(2) PRC has been additized in conformity with the requirements of §80.161 when the detergent component satisfies the requirements of §80.161 and when:

(i) The PRC has been additized in accordance with the detergent composition and use specifications of a detergent certified in accordance with this subpart and in conformity with at least the minimum concentration specifications of that detergent as certified or as otherwise provided under §80.161(d), or

(ii) The PRC is composed of two or more commingled PRCs, and each component has been additized in accordance with the detergent composition and use specifications of a detergent

certified in accordance with this subpart, and in conformity with at least the minimum concentration specifications of that detergent as certified or as otherwise provided under § 80.161(d).

[61 FR 35373, July 5, 1996]

§ 80.169 Liability for violations of the detergent certification program controls and prohibitions.

(a) *Persons Liable*—(1) *Gasoline non-conformity*. Where gasoline contained in any storage tank at any facility owned, leased, operated, controlled or supervised by any gasoline refiner, importer, carrier, distributor, reseller, retailer, wholesale purchaser-consumer, oxygenate blender, or detergent blender, is found in violation of any of the prohibitions specified in § 80.168(a), the following persons shall be deemed in violation:

(i) Each gasoline refiner, importer, carrier, distributor, reseller, retailer, wholesale purchaser-consumer, oxygenate blender, or detergent blender, who owns, leases, operates, controls or supervises the facility (including, but not limited to, a truck or individual storage tank) where the violation is found;

(ii) Each gasoline refiner, importer, distributor, reseller, retailer, wholesale purchaser-consumer, oxygenate blender, detergent manufacturer, distributor, or blender, who refined, imported, manufactured, sold, offered for sale, dispensed, supplied, offered for supply, stored, detergent additized, transported, or caused the transportation of the detergent-additized gasoline (or the base gasoline component, the detergent component, or the detergent-additized post-refinery component of the gasoline) that is in violation, and each such party that caused the gasoline that is in violation to be present in the gasoline distribution system; and

(iii) Each gasoline carrier who dispensed, supplied, stored, or transported any gasoline in the storage tank containing gasoline found to be in violation, and each detergent carrier who dispensed, supplied, stored, or transported the detergent component of any PRC or gasoline in the storage tank containing gasoline found to be in violation, provided that EPA demonstrates, by reasonably specific showings by direct or circumstantial evidence, that the gasoline or detergent carrier caused the violation.

(2) *Post-refinery component non-conformity*. Where detergent-additized PRC contained in any storage tank at any facility owned, leased, operated, controlled or supervised by any gasoline refiner, importer, carrier, distributor, reseller, retailer, wholesale purchaser-consumer, oxygenate blender, detergent manufacturer, carrier, distributor, or blender, is found in violation of the prohibitions specified in § 80.168(e), the following persons shall be deemed in violation:

(i) Each gasoline refiner, importer, carrier, distributor, reseller, retailer, wholesale-purchaser consumer, oxygenate blender, detergent manufacturer, carrier, distributor, or blender, who owns, leases, operates, controls or supervises the facility (including, but not limited to, a truck or individual storage tank) where the violation is found;

(ii) Each gasoline refiner, importer, distributor, reseller, retailer, wholesale purchaser-consumer, oxygenate blender, detergent manufacturer, distributor, or blender, who sold, offered for sale, dispensed, supplied, offered for supply, stored, detergent additized, transported, or caused the transportation of the detergent-additized PRC (or the detergent component of the PRC) that is in violation, and each such party that caused the PRC that is in violation to be present in the PRC or gasoline distribution systems; and

(iii) Each carrier who dispensed, supplied, stored, or transported any detergent-additized PRC in the storage tank containing PRC that is in violation, and each detergent carrier who dispensed, supplied, stored, or transported the detergent component of any detergent-additized PRC which is in the storage tank containing detergent-additized PRC found to be in violation, provided that EPA demonstrates by reasonably specific showings by direct or circumstantial evidence, that the gasoline or detergent carrier caused the violation.

(3) *Detergent non-conformity*. Where the detergent (prior to additization) contained in any storage tank or container found at any facility owned, leased, operated, controlled or supervised by any gasoline refiner, importer,

carrier, distributor, reseller, retailer, wholesale purchaser-consumer, oxygenate blender, detergent manufacturer, carrier, distributor, or blender, is found in violation of the prohibitions specified in § 80.168(d), the following persons shall be deemed in violation:

(i) Each gasoline refiner, importer, carrier, distributor, reseller, retailer, wholesale purchaser-consumer, oxygenate blender, detergent manufacturer, carrier, distributor, or blender, who owns, leases, operates, controls or supervises the facility (including, but not limited to, a truck or individual storage tank) where the violation is found;

(ii) Each gasoline refiner, importer, distributor, reseller, retailer, wholesale purchaser-consumer, oxygenate blender, detergent manufacturer, distributor, or blender, who sold, offered for sale, dispensed, supplied, offered for supply, stored, transported, or caused the transportation of the detergent that is in violation, and each such party that caused the detergent that is in violation to be present in the detergent, gasoline, or PRC distribution systems; and

(iii) Each gasoline or detergent carrier who dispensed, supplied, stored, or transported any detergent which is in the storage tank or container containing detergent found to be in violation, provided that EPA demonstrates, by reasonably specific showings by direct or circumstantial evidence, that the gasoline or detergent carrier caused the violation.

(4) *Volumetric additive reconciliation*. Where a violation of the volumetric additive reconciliation requirements established by § 80.168(b) has occurred, the following persons shall be deemed in violation:

(i) Each detergent blender who owns, leases, operates, controls or supervises the facility (including, but not limited to, a truck or individual storage tank) where the violation has occurred; and

(ii) Each gasoline refiner, importer, carrier, distributor, reseller, retailer, wholesale purchaser-consumer, or oxygenate blender, and each detergent manufacturer, carrier, distributor, or blender, who refined, imported, manufactured, sold, offered for sale, dispensed, supplied, offered for supply, stored, transported, or caused the transportation of the detergent-additized gasoline, the base gasoline component, the detergent component, or the detergent-additized PRC of the gasoline that is in violation, provided that EPA demonstrates, by reasonably specific showings by direct or circumstantial evidence, that such person caused the violation.

(5) *Product transfer document*. Where a violation of § 80.168(c) is found at a facility owned, leased, operated, controlled, or supervised by any gasoline refiner, importer, carrier, distributor, reseller, retailer, wholesale purchaser-consumer, oxygenate blender, detergent manufacturer, carrier, distributor, or blender, the following persons shall be deemed in violation: each gasoline refiner, importer, carrier, distributor, reseller, retailer, wholesale purchaser-consumer, oxygenate blender, detergent manufacturer, carrier, distributor, or blender, who owns, leases, operates, control or supervises the facility (including, but not limited to, a truck or individual storage tank) where the violation is found.

(b) *Branded Refiner Vicarious Liability*. Where any violation of the prohibitions specified in § 80.168 has occurred, with the exception of violations of § 80.168(c), a refiner will also be deemed liable for violations occurring at a facility operating under such refiner's corporate, trade, or brand name or that of any of its marketing subsidiaries. For purposes of this section, the word facility includes, but is not limited to, a truck or individual storage tank.

(c) *Defenses*. (1) In any case in which a gasoline refiner, importer, distributor, carrier, reseller, retailer, wholesale purchaser-consumer, oxygenate blender, detergent distributor, carrier, or blender, is in violation of any of the prohibitions of § 80.168, pursuant to paragraph (a) or (b) of this section as applicable, the regulated party shall be deemed not in violation if it can demonstrate:

(i) That the violation was not caused by the regulated party or its employee or agent (unless otherwise provided in this paragraph (c));

(ii) That product transfer documents account for the gasoline, detergent, or detergent-additized PRC in violation

and indicate that the gasoline, detergent, or detergent-additized PRC satisfied relevant requirements when it left the party's control; and

(iii) That the party has fulfilled the requirements of paragraphs (c) (2) or (3) of this section, as applicable.

(2) *Branded refiner.* Where a branded refiner is in violation of any of the prohibitions of § 80.168 as a result of violations occurring at a facility (including, but not limited to, a truck or individual storage tank) which is operating under the corporate, trade or brand name of a refiner or that of any of its marketing subsidiaries, the refiner shall be deemed not in violation if it can demonstrate, in addition to the defense requirements stated in paragraph (c)(1) of this section, that the violation was caused by:

(i) An act in violation of law (other than these regulations), or an act of sabotage or vandalism, whether or not such acts are violations of law in the jurisdiction where the violation of the prohibitions of § 80.168 occurred; or

(ii) The action of any gasoline refiner, importer, reseller, distributor, oxygenate blender, detergent manufacturer, distributor, blender, or retailer or wholesale purchaser-consumer supplied by any of these persons, in violation of a contractual undertaking imposed by the refiner designed to prevent such action, and despite the implementation of an oversight program, including, but not limited to, periodic review of product transfer documents by the refiner to ensure compliance with such contractual obligation; or

(iii) The action of any gasoline or detergent carrier, or other gasoline or detergent distributor not subject to a contract with the refiner but engaged by the refiner for transportation of gasoline, PRC, or detergent, to a gasoline or detergent distributor, oxygenate blender, detergent blender, gasoline retailer or wholesale purchaser consumer, despite specification or inspection of procedures or equipment by the refiner which are reasonably calculated to prevent such action.

(iv) In this paragraph (c)(2), to show that the violation ''was caused'' by any of the specified actions, the party must demonstrate by reasonably specific showings, by direct or circumstantial evidence, that the violation was caused or must have been caused by another.

(3) *Detergent blender.* In any case in which a detergent blender is liable for violating any of the prohibitions of § 80.168, the detergent blender shall not be deemed in violation if it can demonstrate, in addition to the defense requirements stated in paragraph (c)(1) of this section, the following:

(i) That it obtained or supplied, as appropriate, prior to the detergent blending, accurate written instructions from the detergent manufacturer or other party with knowledge of such instructions, specifying the appropriate LAC for the detergent, as specified in § 80.161(b)(1)(ii), together with any use restrictions which pertain to this LAC pursuant to the detergent's certification; and

(ii) That it has implemented a quality assurance program that includes, but is not limited to, a periodic review of its supporting product transfer and volume measurement documents to confirm the correctness of its product transfer and volumetric additive reconciliation documents created for all products it additized.

(4) *Detergent manufacturer.*— (i) *Presumptive Liability Affirmative Defense.* Notwithstanding the provisions of paragraph (c)(1) of this section, in any case in which a detergent manufacturer is liable for violating any of the prohibitions of § 80.168, the detergent manufacturer shall be deemed not in violation if it can demonstrate each of the following:

(A) Product transfer documents which account for the detergent component of the product in violation and which indicate that such detergent satisfied all relevant requirements when it left the detergent manufacturer's control.

(B) Written blending instructions which, pursuant to § 80.161(c), were supplied by the detergent manufacturer to its customer who purchased or obtained from the manufacturer the detergent component of the product determined to be in violation. The written blending instructions must have been supplied by the manufacturer prior to the customer's use or sale of the detergent. The instructions must accurately specify both the appropriate

LAC for the detergent, pursuant to § 80.161(b)(1)(ii), plus any use restrictions which may pertain to this LAC pursuant to the detergent's certification.

(C) If the detergent batch used in the noncomplying product was produced less than one year before the manufacturer was notified by EPA of the possible violation, then the manufacturer must provide FTIR test results for the batch in question.

(*1*) The FTIR analysis may have been conducted on the subject detergent batch at the time it was manufactured, or may be conducted on a sample of that batch which the manufacturer retained for such purpose at the time the batch was manufactured.

(*2*) To establish that, when it left the manufacturer's control, the detergent component of the noncomplying product was in conformity with the chemical composition and concentration specifications reported pursuant to § 80.161(b), the FTIR test results for the detergent batch used in the noncomplying product must, in EPA's judgment, be consistent with the FTIR results submitted at the time of registration pursuant to § 80.162(d).

(D) If the detergent batch used in the noncomplying product was produced more than one year prior to the manufacturer's notification by EPA of the possible violation, then the manufacturer must provide either:

(*1*) FTIR test results for the batch in question as specified in the preceding paragraph (c)(4)(i)(C) of this § 80.169(c); or

(*2*) The following materials:

(*i*) Documentation for the batch in question, showing that its measured viscosity, density, and basic nitrogen content, or any other such physical parameter(s) which EPA may have approved for monitoring production quality control, were within the acceptable range of production values specified in the certification pursuant to § 80.162(e); and

(*ii*) If the detergent registration identifies polymeric component(s) of the detergent package as the product(s) of other chemical reactants, documentation that the reagents used to synthesize the detergent batch in question were the same as those specified in the registration and that they met the manufacturer's normal acceptance criteria reported pursuant to § 80.162(b)(1).

(ii) *Detergent manufacturer causation liability*. In any case in which a detergent manufacturer is liable for a violation of § 80.168, and the manufacturer establishes an affirmative defense to such liability pursuant to § 80.169(c)(4)(i), the detergent manufacturer will nonetheless be deemed liable for the violation of § 80.168 if EPA can demonstrate, by reasonably specific showings by direct or circumstantial evidence, that the detergent manufacturer caused the violation.

(5) *Defense against liability where more than one party may be liable for VAR violations.* In any case in which a party is presumptively or vicariously liable for a violation of § 80.170, except for the VAR record requirements pursuant to § 80.170(g), such party shall not be deemed liable if it can establish the following:

(i) Prior to the violation it had entered into a written contract with another potentially liable detergent blender party (''the assuming party''), under which that other party assumed legal responsibility for fulfilling the VAR requirement that had been violated;

(ii) The contract included reasonable oversight provision to ensure that the assuming party fulfilled its VAR responsibilities (including, but not limited to, periodic review of VAR records) and the oversight provision was actually implemented by the party raising the defense;

(iii) The assuming party is fiscally sound and able to pay its penalty for the VAR violation; and

(iv) The employees or agents of the party raising the defense did not cause the violation.

(6) *Defense to liability for gasoline nonconformity violations caused solely by the addition of misadditized ethanol or other PRC to the gasoline.* In any case in which a party is presumptively or vicariously liable for a gasoline non-conformity violation of § 80.168(a) caused solely by another party's addition of misadditized ethanol or other PRC to the gasoline, the former party shall not be deemed liable for the violation, provided that it can establish that it has

fulfilled the defense requirements of paragraphs (c)(1) (i) and (ii) of this section.

(7) *Detergent tank transitioning defenses.* The commingling of two detergents in the same detergent storage tank will not be deemed to violate or cause violations of any of the provisions of this subpart, provided the following conditions are met:

(i) The commingling must occur during a legitimate detergent transitioning event, *i.e.*, a shift from the use of one detergent to another through the delivery of the new detergent into the same tank that contains the original detergent; and

(ii) Any use restrictions applicable to the new detergent's certification also apply to the combined detergents; and

(iii) The commingling event must be documented, either on the VAR formula record or on attached supporting records; and

(iv) Notwithstanding any contrary provisions in § 80.170, a VAR formula record must be created for the combined detergents. The VAR compliance period must begin no later than the time of the commingling event. However, at the blender's option, the compliance period may begin earlier, thus including use of the uncombined original detergent within the same period, provided that the 31-day limitation pursuant to § 80.170(a)(6) is not exceeded; and

(v) The VAR formula record must also satisfy the requirements in one of the following paragraphs (c)(7)(v) (A) through (C) of this section, whichever applies to the commingling event. If neither paragraph (c)(7)(v) (A) nor (B) of this section initially applies, then the blender may drain and subsequently redeliver the original detergent into the tank in restricted amounts, in order to meet the conditions of paragraph (c)(7)(v) (A) or (B) of this section. Otherwise, the blender must comply with paragraph (c)(7)(v)(C) of this section.

(A) If both detergents have the same LAC, and the original detergent accounts for no more than 20 percent of the tank's total delivered volume after addition of the new detergent, then the VAR formula record is required to identify only the use of the new detergent.

(B) If the two detergents have different LACs and the original detergent accounts for 10 percent or less of the tank's total delivered volume after addition of the new detergent, then the VAR formula record is required to identify only the use of the new detergent, and must attain the LAC of the new detergent. If the original detergent's LAC is greater than that of the new detergent, then the compliance period may begin earlier than the date of the commingling event (pursuant to paragraph (c)(7)(iv) of this section) only if the original detergent does not exceed 10 percent of the total detergent used during the compliance period.

(C) If neither of the preceding paragraphs (c)(7)(v) (A) or (B) of this section applies, then the VAR formula record must identify both of the commingled detergents, and must use and attain the higher LAC of the two detergents. Once the commingled detergent has been depleted by an amount equal to the volume of the original detergent in the tank at the time the new detergent was added, subsequent VAR formula records must identify and use the LAC of only the new detergent.

(8) *Transition from noncertified to certified detergent.* Notwithstanding the prohibitions in §§ 80.161(a)(3) and 80.168, after June 30, 1997, the addition to gasoline or PRC of a detergent which has not been certified pursuant to § 80.161 shall not be deemed to violate or cause violations of provisions of this subpart, provided that all of the following conditions are met:

(i) The detergent was received by the detergent blender prior to July 1, 1997 and is used prior to January 1, 1998. Documentation which supports these dates must be maintained for at least five years and must be available for EPA's inspection upon request;

(ii) The detergent is added to gasoline or PRC only in combination with a certified detergent and, at any one time, accounts for no more than 10 percent of the detergent tank's delivered volume;

(iii) The total volume of detergent added to the gasoline or PRC is sufficient to attain the LAC of the certified detergent; and

(iv) Use restrictions associated with the certified detergent are adhered to.

(9) *Procedures for curing use restrictions.* In the case of a fuel product which has been additized with a detergent under the conditions of a use-restricted certification (pursuant to § 80.163), the use restriction can be negated (''cured'') by application of the procedures in this paragraph (c)(9). A party shall not be liable for violations of § 80.168(a) or (e) caused solely by the additization or subsequent use of gasoline or PRC in violation of such use restriction, provided that the following steps and conditions are applied before EPA has identified the nonconformity and prior to the sale or transfer of nonconforming product to the ultimate consumer:

(i) Additional detergent must be added in sufficient quantity to provide effective deposit control, taking into account both the amount of detergent previously added and the final anticipated volume and composition of the subject fuel product.

(ii) The additional detergent may be either the original detergent or a different detergent, so long as the additional detergent has been separately certified both for use with the subject fuel product and for use with the type of fuel product associated with the restriction which the party wishes to negate by the curing procedure. Detergents which have not been separately certified for both types of fuel products are not eligible to be used for this curing procedure.

(iii) If a fuel product has been detergent additized under the conditions of a use-restricted certification which would preclude the addition of an oxygenate or other PRC, then such oxygenate or other PRC may nevertheless be added to that fuel product under this curing procedure, provided that additional eligible detergent is added, in an amount which equals or exceeds the number of gallons (D_A) derived from the following equation:

Additional Detergent Volume=D_A=$Vp(LAC_2–LAC_1)$ + $V(1-p)LAC_2$FP-2≤Where:FP-2

V=Final volume of fuel product (in gallons)

p=Fraction of final fuel product composed of the original (uncombined) fuel product

LAC_2=Detergent's LAC certified for the final combined fuel product (in gallons of detergent per 1,000 gallons of fuel product)

LAC_1=Detergent's LAC certified for the original (uncombined) fuel product (in gallons of detergent per 1,000 gallons of fuel product)

(iv) In other instances in which gasoline or PRC has been additized in violation of a detergent use restriction, and no additional fuel components are to be added, such use restriction can be cured by the addition of eligible detergent in an amount which equals or exceeds the number of gallons (DA) derived from the following equation, which is a simplified version of the previous equation:

Additional Detergent Volume=D_A=$V(LAC_2–LAC_1)$FP-2

Where:

V=Volume of fuel product (in gallons) to be cured of the use restriction

LAC_2=Detergent's LAC certified for the fuel product without the use restriction (in gallons of detergent per 1,000 gallons of fuel product)

LAC_1=Detergent's LAC certified for the fuel product with the use restriction to be cured (in gallons of detergent per 1,000 gallons of fuel product)

(v) In all such instances, a curing VAR must be created and maintained, which documents the use of the appropriate equation as specified above, and otherwise complies with the requirements of § 80.170(f)(6).

[61 FR 35373, July 5, 1996, as amended at 61 FR 58747, Nov. 18, 1996]

§ 80.170 Volumetric additive reconciliation (VAR), equipment calibration, and recordkeeping requirements.

This section contains requirements for automated detergent blending facilities and hand-blending detergent facilities. All gasoline and all PRC intended for use in gasoline must be additized unless otherwise noted in supporting VAR records, and must be accounted for in VAR records. The

VAR reconciliation standard is attained under this section when the actual concentration of detergent used per VAR formula record equals or exceeds the applicable LAC certified for that detergent pursuant to § 80.161(b)(3)(ix) or, if appropriate, § 80.161(d). If a given detergent package has been certified under more than one certification option pursuant to § 80.163, then a separate VAR formula record must be created for gasoline or PRC additized on the basis of each certification and its respective LAC. In such cases, the amount of the detergent used under different certification options must be accurately and separately measured, either through the use of a separate storage tank, a separate meter, or some other measurement system that is able to accurately distinguish its use. Recorded volumes of gasoline, detergent, and PRC must be expressed to the nearest gallon (or smaller units), except that detergent volumes of five gallons or less must be expressed to the nearest tenth of a gallon (or smaller units). However, if the blender's equipment cannot accurately measure to the nearest tenth of a gallon, then such volumes must be rounded downward to the next lower gallon. PRC included in the reconciliation must be identified. Each VAR formula record must also contain the following information:

(a) *Automated blending facilities.* In the case of an automated detergent blending facility, for each VAR period, for each detergent storage system and each detergent in that storage system, the following must be recorded:

(1) The manufacturer and commercial identifying name of the detergent additive package being reconciled, the LAC, and any use restriction applicable to the LAC. The LAC must be expressed in terms of gallons of detergent per thousand gallons of gasoline or PRC, and expressed to four digits. If the detergent storage system which is the subject of the VAR formula record is a proprietary system under the control of a customer, this fact must be indicated on the record.

(2) The total volume of detergent blended into gasoline and PRC, in accordance with one of the following paragraphs (a)(2)(i) or (ii) of this section, as applicable.

(i) For a facility which uses in-line meters to measure detergent usage, the total volume of detergent measured, together with supporting data which includes one of the following: the beginning and ending meter readings for each meter being measured, the metered batch volume measurements for each meter being measured, or other comparable metered measurements. The supporting data may be supplied on the VAR formula record or in the form of computer printouts or other comparable VAR supporting documentation.

(ii) For a facility which uses a gauge to measure the inventory of the detergent storage tank, the total volume of detergent shall be calculated from the following equation:FP-2≤Detergent Volume=(A)−(B)+(C)−(D)FP-2

Where:FP-2≤A=Initial detergent inventory of the tank

B=Final detergent inventory of the tank

C=Sum of any additions to detergent inventory

D=Sum of any withdrawals from detergent inventory for purposes other than the additization of gasoline or PRC.FP≤The value of each variable in this equation must be separately recorded on the VAR formula record. In addition, a list of each detergent addition included in variable C and a list of each detergent withdrawal included in variable D must be provided, either on the formula record or as VAR supporting documentation.

(3) The total volume of gasoline plus PRC to which detergent has been added, together with supporting data which includes one of the following: the beginning and ending meter measurements for each meter being measured, the metered batch volume measurements for each meter being measured, or other comparable metered measurements. The supporting data may be supplied on the VAR formula record or in the form of computer printouts or other comparable VAR supporting documentation. If gasoline has intentionally been overadditized in anticipation of the later addition of

unadditized PRC, then the total volume of gasoline plus PRC recorded must include the expected amount of unadditized PRC to be added later. In addition, the amount of gasoline which was overadditized for this purpose must be specified.

(4) The actual detergent concentration, calculated as the total volume of detergent added (pursuant to paragraph (a)(2) of this section), divided by the total volume of gasoline plus PRC (pursuant to paragraph (a)(3) of this section). The concentration must be calculated and recorded to four digits.

(5) A list of each detergent concentration rate initially set for the detergent that is the subject of the VAR record, together with the date and description of each adjustment to any initially set concentration. The concentration adjustment information may be supplied on the VAR formula record or in the form of computer printouts or other comparable VAR supporting documentation. No concentration setting is permitted below the applicable certified LAC, except as may be modified pursuant to § 80.161(d) or as described in paragraph (a)(7) of this section.

(6) The dates of the VAR period, which shall be no longer than thirty-one days. If the VAR period is contemporaneous with a calendar month, then specifying the month will fulfill this requirement; if not, then the beginning and ending dates and times of the VAR period must be listed. The times may be supplied on the VAR formula record or in supporting documentation. Any adjustment to any detergent concentration rate more than 10 percent over the concentration rate initially set in the VAR period shall terminate that VAR period and initiate a new VAR period, except as provided in paragraph (a)(7) of this section.

(7) The concentration setting for a detergent injector may be set below the applicable LAC, or it may be adjusted more than 10 percent above the concentration initially set in the VAR period without terminating that VAR period, provided that:

(i) The purpose of the change is to correct a batch misadditization prior to the end of the VAR period and prior to the transfer of the batch to another party, or to correct an equipment malfunction; and

(ii) The concentration is immediately returned after the correction to a concentration that fulfills the requirements of paragraphs (a) (5) and (6) of this section; and

(iii) The blender creates and maintains documentation establishing the date and adjustments of the correction; and

(iv) If the correction is initiated only to rectify an equipment malfunction, and the amount of detergent used in this procedure is not added to gasoline within the compliance period, then this amount is subtracted from the detergent volume listed on the VAR formula record.

(8) If unadditized gasoline has been transferred from the facility, other than bulk transfers from refineries or pipelines to non-retail outlets or non-WPC facilities, the total amount of such gasoline must be specified.

(b) *Non-automated facilities.* In the case of a facility in which hand blending or any other non-automated method is used to blend detergent, for each detergent and for each batch of gasoline and each batch of PRC to which the detergent is being added, the following shall be recorded:

(1) The manufacturer and commercial identifying name of the detergent additive package being reconciled, the LAC, and any use restriction applicable to the LAC. The LAC must be expressed in terms of gallons of detergent per thousand gallons of gasoline or PRC, and expressed to four digits.

(2) The date of the additization that is the subject of the VAR formula record.

(3) The volume of added detergent.

(4) The volume of the gasoline and/or PRC to which the detergent has been added. If gasoline has intentionally been overadditized in anticipation of the later addition of unadditized PRC, then the total volume of gasoline plus PRC recorded must include the expected amount of unadditized PRC to be added later. In addition, the amount of gasoline which was overadditized for this purpose must be specified.

(5) The brand (if known), grade, and leaded/unleaded status of gasoline, and/or the type of PRC.

(6) The actual detergent concentration, calculated as the volume of added detergent (pursuant to paragraph (b)(3) of this section), divided by the volume of gasoline and/or PRC (pursuant to paragraph (b)(4) of this section). The concentration must be calculated and recorded to four digits.

(c) Every VAR formula record created pursuant to paragraphs (a) and (b) of this section shall contain the following:

(1) The signature of the creator of the VAR record;

(2) The date of the creation of the VAR record; and

(3) A certification of correctness by the creator of the VAR record.

(d) Electronically-generated VAR formula and supporting records.

(1) Electronically-generated records are acceptable for VAR formula records and supporting documentation (including PTDs), provided that they are complete, accessible, and easily readable. VAR formula records must also be stored with access and audit security, which must restrict to a limited number of specified people those who have the ability to alter or delete the records. In addition, parties maintaining records electronically must make available to EPA the hardware and software necessary to review the records.

(2) Electronically-generated VAR formula records may use an electronic user identification code to satisfy the signature requirements of paragraph (c)(1) of this section, provided that:

(i) The use of the ID is limited to the record creator; and

(ii) A paper record is maintained, which is signed and dated by the VAR formula record creator, acknowledging that the use of that particular user ID on a VAR formula record is equivalent to his/her signature on the document.

(e) Automated detergent blenders must calibrate their detergent equipment once in each calendar half year, with the acceptable calibrations being no less than one hundred twenty days apart. Equipment recalibration is also required each time the detergent package is changed, unless written documentation indicates that the new detergent package has the same viscosity as the previous detergent package. Detergent package change calibrations may be used to satisfy the semiannual requirement provided that the calibrations occur in the appropriate half calendar year and are no less than one hundred twenty days apart.

(f) The following VAR supporting documentation must also be created and maintained:

(1) For all automated detergent blending facilities, documentation reflecting performance of the calibrations required by paragraph (e) of this section, and any associated adjustments of the automated detergent equipment;

(2) For all hand-blending facilities which are terminals, a record specifying, for each VAR period, the total volume in gallons of transfers from the facility of unadditized base gasoline;

(3) For all detergent blending facilities, product transfer documents for all gasoline, detergent and detergent-additized PRC transferred into or out of the facility; in addition, bills of lading, transfer, or sale for all unadditized PRC transferred into the facility;

(4) For all automated detergent blending facilities, documentation establishing the brands (if known) and grades of the gasoline which is the subject of the VAR formula record; and

(5) For all hand blending detergent blenders, the documentation, if in the party's possession, supporting the volumes of gasoline, PRC, and detergent reported on the VAR formula record.

(6) For all detergent blending facilities, documentation establishing the curing of a batch or amount of misadditized gasoline or PRC, or the curing of a use restriction on the additized gasoline or PRC, and providing at least the following information: the date of the curing procedure; the problem that was corrected; the amount, name, and LAC of the original detergent used; the amount, name, and LAC of the added curing detergent; and the actual detergent concentration attained in, and the volume of, the total cured product.

(g) Document retention and availability. All detergent blenders shall retain the documents required under this section for a period of five years from the date the VAR formula records and supporting documentation are created,

and shall deliver them upon request to the EPA Administrator or the Administrator's authorized representative.

(1) Except as provided in paragraph (g)(3) of this section, automated detergent blender facilities and hand-blender facilities which are terminals, which physically blend detergent into gasoline, must make immediately available to EPA, upon request, the preceding twelve months of VAR formula records plus the preceding two months of VAR supporting documentation.

(2) Except as provided in paragraph (g)(3) of this section, other hand-blending detergent facilities which physically blend detergent into gasoline must make immediately available to EPA, upon request, the preceding two months of VAR formula records and VAR supporting documentation.

(3) Facilities which have centrally maintained records at other locations, or have customers who maintain their own records at other locations for their proprietary detergent systems, and which can document this fact to the Agency, may have until the start of the next business day after the EPA request to supply VAR supporting documentation, or longer if approved by the Agency.

(4) In this paragraph (g) of this section, the term *immediately available* means that the records must be provided, electronically or otherwise, within approximately one hour of EPA's request, or within a longer time frame as approved by EPA.

[61 FR 35377, July 5, 1996]

§80.171 Product transfer documents (PTDs).

(a) *Contents.* For each occasion when any gasoline refiner, importer, reseller, distributor, carrier, retailer, wholesale purchaser-consumer, oxygenate blender, detergent manufacturer, distributor, carrier, or blender, transfers custody or title to any gasoline, detergent, or detergent-additized PRC other than when detergent-additized gasoline is sold or dispensed at a retail outlet or wholesale purchaser-consumer facility to the ultimate consumer, the transferor shall provide to the transferee, and the transferee shall acquire from the transferor, documents which accurately include the following information:

(1) The name and address of the transferee and transferor; the address requirement may be fulfilled, in the alternative, through separate documentation which establishes said addresses and is maintained by the parties and made available to EPA for the same length of time as required for the PTDs, provided that the normal business procedure of these parties is not to identify addresses on PTDs.

(2) The date of the transfer.

(3) The volume of product transferred.

(4)(i) The identity of the product being transferred (*i.e.*, its identity as base gasoline, detergent, detergent-additized gasoline, or specified detergent-additized oxygenate or detergent-additized gasoline blending stock that comprises a detergent-additized PRC). PTDs for detergent-additized gasoline or PRC are not required to identify the particular detergent used to additize the product.

(ii) If the product being transferred consists of two or more different types of product subject to this regulation, *i.e.*, base gasoline, detergent-additized gasoline, or specified detergent-additized PRC, component, then the PTD for the commingled product must identify each such type of component contained in the commingled product.

(5) If the product being transferred is gasoline to which an oxygenate or a PRC has been added, the PTD for the gasoline must identify the oxygenate or PRC. The PTDs for commingled additized gasolines must identify all the oxygenates and PRCs added to either component.

(6) If the product being transferred is base gasoline, then in addition to the base gasoline identification, the following warning must be stated on the PTD: ''Not for sale to the ultimate consumer''. If, pursuant to §80.173(a), the product being transferred is exempt base gasoline to be used for research, development, or test purposes only, the following warning must also be stated on the PTD: ''For use in research, development, and test programs only''.

(7) The name of the detergent additive as reported in its registration

must be used to identify the detergent package on its PTD.

(8) If the product being transferred is leaded gasoline, then the PTD must disclose that the product contains lead and/or phosphorous, as applicable.

(9) If the product being transferred is gasoline or PRC that has been additized with detergent under a PADD-specific or CARB-based certification, or under a certification option which creates an oxygenate or PRC use restriction, then the PTD for the additized product must identify the applicable use restriction. The PTD for commingled additized gasolines or PRCs containing such restrictions must indicate the applicable restriction(s) from each component.

(10) If the product being transferred is detergent-additized gasoline or PRC that has been overadditized in anticipation of the later (or earlier) addition of PRC, then the PTD must include a statement that the product has been overadditized to account for a specified volume in gallons, or a specified percentage of the product's total volume, of additional, specified PRC.

(11) If a detergent package has been certified under only one certification option, and that option places a use restriction on the respective LAC, then the PTD must identify the detergent as use-restricted; the PTD for a detergent package certified with more than one LAC must identify that the detergent has special use options available.

(12) Base gasoline designated for fuel-specific certification.

(i) The PTD for segregated base gasoline intended for additization with a specific fuel-specific detergent pursuant to § 80.163(c) must indicate that it is for use with the designated, fuel-specific detergent.

(ii) A PTD for base gasoline may not indicate that the product is for use with a designated, fuel-specific detergent, unless the entire quantity of base gasoline is from the segregated fuel supply specified in the detergent's certification and the gasoline contains only those oxygenates or PRCs, if any, specified and approved in the detergent's certification.

(iii) If, pursuant to § 80.163(c)(3), the fuel-specific certification for the segregated pool of gasoline has established that no detergent additives are necessary for such gasoline to comply with this subpart, then the PTD must identify this gasoline as detergent-equivalent gasoline.

(b) *Use of product codes and other non-regulatory language.* (1) Product codes and other non-regulatory language may not be used as a substitute for the specified PTD warning language specified in paragraph (a)(6) of this section for base gasoline, except that:

(i) The specified warning language may be omitted for bulk transfers of base gasoline from a refinery to a pipeline if there is a prior written agreement between the parties specifying that all such gasoline is unadditized and will not be transferred to the ultimate consumer;

(ii) Product codes may be used as a substitute for the specified warning language provided that the PTD is an electronic data interchange (EDI) document being used solely for the transfer of title to the base gasoline, and provided that the product codes otherwise comply with the requirements of this section.

(2) Product codes and other non-regulatory language may not be used in place of the PTD language specified in paragraph (a)(11) of this section regarding detergent package use restrictions.

(3) Product codes and other language not specified in this section may otherwise be used to comply with PTD information requirements, provided that they are clear, accurate, and not misleading.

(4) If product codes are used, they must be standardized throughout the distribution system in which they are used, and downstream parties must be informed of their full meaning.

(c) *PTD exemption for small transfers of additized gasoline.* Transfers of additized gasoline are exempt from the PTD requirements of this section provided all the following conditions are satisfied:

(1) The product is being transferred by a distributor who is not the product's detergent blender; and

(2) The recipient is a wholesale purchaser-consumer (WPC) or other ultimate consumer of gasoline, for its own use only or for that of its agents or employees; and

(3) The volume of additized gasoline being transferred is no greater than 550 gallons.

(d) *Recordkeeping Period.* Any person creating, providing or acquiring product transfer documentation for gasoline, detergent, or detergent-additized PRC shall retain the documents required by this section for a period of five years from the date the product transfer documentation was created, received or transferred, as applicable, and shall deliver such documents to EPA upon request. WPCs are not required to retain PTDs of additized gasoline received by them.

[61 FR 35379, July 5, 1996]

§80.172 Penalties.

(a) *General.* Any person who violates any prohibition or affirmative requirement of §80.168 shall be liable to the United States for a civil penalty of not more than the sum of $25,000 for every day of such violation and the amount of economic benefit or savings resulting from the violation.

(b) *Gasoline non-conformity.* Any violation of §80.168(a) shall constitute a separate day of violation for each and every day the gasoline in violation remains at any place in the gasoline distribution system, beginning on the day that the gasoline is in violation of the respective prohibition and ending on the last day that such gasoline is offered for sale or is dispensed to any ultimate consumer.

(c) *Detergent non-conformity.* Any violation of §80.168(d) shall constitute a separate day of violation for each and every day the detergent in violation remains at any place in the gasoline or detergent distribution system, beginning on the day that the detergent is in violation of the prohibition and ending on the last day that detergent-additized gasoline, containing the subject detergent as a component thereof, is offered for sale or is dispensed to any ultimate consumer.

(d) *Post-refinery component non-conformity.* Any violation of §80.168(e) shall constitute a separate day of violation for each and every day the PRC in violation remains at any place in the PRC or gasoline distribution system, beginning on the day that the PRC is in violation of the respective prohibition and ending on the last day that detergent-additized gasoline containing the PRC is offered for sale or is dispensed to any ultimate consumer.

(e) *Product transfer document non-conformity.* Any violation of §80.168(c) shall constitute a separate day of violation for every day the PTD is not fully in compliance. This is to begin on the day that the PTD is created or should have been created and to end at the later of the following dates:

(1) The day that the document is corrected and comes into compliance; or

(2) The day that gasoline not additized in conformity with detergent certification program requirements, as a result of the PTD non-conformity, is offered for sale or is dispensed to the ultimate consumer.

(f) *Volumetric additive reconciliation recordkeeping non-conformity.* Any VAR recordkeeping violation of §80.168(b) shall constitute a separate day of violation for every day that VAR recordkeeping is not fully in compliance. Each element of the VAR record keeping program that is not in compliance shall constitute a separate violation for purposes of this section.

(g) *Volumetric additive reconciliation compliance standard non-conformity.* Any violation of the VAR compliance standard established in §80.170 shall constitute a separate day of violation for each and every day of the VAR compliance period in which the standard was violated.

(h) *Volumetric additive reconciliation equipment calibration non-conformity.* Any VAR equipment calibration violation of §80.168(b) shall constitute a separate day of violation for every day a VAR equipment calibration requirement is not met.

[61 FR 35380, July 5, 1996, as amended at 61 FR 58747, Nov. 18, 1996]

§80.173 Exemptions.

(a) *Research, development, and testing exemptions.* Any detergent that is either in a research, development, or test status, or is sold to petroleum, automobile, engine, or component manufacturers for research, development, or test purposes, or any gasoline to be used by, or under the control of, petroleum, additive, automobile, engine, or component manufacturers for research,

development, or test purposes, is exempted from the provisions of the detergent certification program, provided that:

(1) The detergent (or fuel containing the detergent), or the gasoline, is kept segregated from non-exempt product, and the party possessing the product maintains documentation identifying the product as research, development, or testing detergent or fuel, as applicable, and stating that it is to be used only for research, development, or testing purposes; and

(2) The detergent (or fuel containing the detergent), or the gasoline, is not sold, dispensed, or transferred, or offered for sale, dispensing, or transfer, from a retail outlet. It shall also not be sold, dispensed, or transferred or offered for sale, dispensing, or transfer from a wholesale purchaser-consumer facility, unless such facility is associated with detergent, fuel, automotive, or engine research, development or testing; and

(3) The party using the product for research, development, or testing purposes, or the party sponsoring this usage, notifies the EPA, on at least an annual basis and prior to the use of the product, of the purpose(s) of the program(s) in which the product will be used and the anticipated volume of the product to be used. The information must be submitted to the address or fax number specified in § 80.174(c).

(b) *Racing fuel and aviation fuel exemptions.* Any fuel that is refined, sold, dispensed, transferred, or offered for sale, dispensing, or transfer as automotive racing fuel or as aircraft engine fuel, is exempted from the provisions of this subpart, provided that:

(1) The fuel is kept segregated from non-exempt fuel, and the party possessing the fuel for the purposes of refining, selling, dispensing, transferring, or offering for sale, dispensing, or transfer as automotive racing fuel or as aircraft engine fuel, maintains documentation identifying the product as racing fuel, restricted for non-highway use in racing motor vehicles, or as aviation fuel, restricted for use in aircraft, as applicable;

(2) Each pump stand at a regulated party's facility, from which such fuel is dispensed, is labeled with the applicable fuel identification and use restrictions described in paragraph (b)(1) of this section; and

(3) The fuel is not sold, dispensed, transferred, or offered for sale, dispensing, or transfer for highway use in a motor vehicle.

(c) *California gasoline exemptions.* (1) Gasoline or PRC which is additized in the state of California is exempt from the VAR provisions in §§ 80.168 (b) and (e) and 80.170, provided that:

(i) For all such gasoline or PRC, whether intended for sale within or outside of California, records of the type required for California gasoline (specified in title 13, California Code of Regulations, section 2257) are maintained; and

(ii) Such records, with the exception of daily additization records, are maintained for a period of five years from the date they were created and are delivered to EPA upon request.

(2) Gasoline or PRC that is transferred and/or sold solely within the state of California is exempt from the PTD provisions of the detergent certification program, specified in §§ 80.168(c) and 80.171.

(3) Nothing in this paragraph (c) exempts such gasoline or PRC from the requirements of § 80.168 (a) and (e), as applicable. EPA will base its determination of California gasoline's conformity with the detergent's LAC on the additization records required by CARB, or records of the same type.

[61 FR 35380, July 5, 1996]

§ 80.174 Addresses.

(a) The detergent additive sample required under § 80.161(b)(2) shall be sent to: Manager, Fuels and Technical Analysis Group, Testing Services Division, U.S. Environmental Protection Agency, National Vehicle and Fuel Emissions Laboratory, 2565 Plymouth Road, Ann Arbor, Michigan 48105.

(b) Other detergent registration and certification data, and certain other information which may be specified in this subpart, shall be sent to: Detergent Additive Certification, Director, Fuels and Energy Division, U.S. Environmental Protection Agency (6406J), 401 M Street, SW., Washington, DC 20460.

(c) Notifications to EPA regarding program exemptions, detergent dilution and commingling, and certain other information which may be specified in this subpart, shall be sent to: Detergent Enforcement Program, U.S. Environmental Protection Agency, Suite 214, 12345 West Alameda Parkway, Denver, CO 80228, (FAX 303–969–6490).

[61 FR 35381, July 5, 1996]

APPENDIX A TO PART 80—TEST FOR THE DETERMINATION OF PHOSPHORUS IN GASOLINE

1. *Scope.*

1.1 This method was developed for the determination of phosphorus generally present as pentavalent phosphate esters or salts, or both, in gasoline. This method is applicable for the determination of phosphorus in the range from 0.0008 to 0.15 g P/U.S. gal, or 0.2 to 49 mg P/liter.

2. *Applicable documents.*

2.1 ASTM Standards:

D 1100 Specification for Filter Paper for Use in Chemical Analysis.

3. *Summary of method.*

3.1 Organic matter in the sample is decomposed by ignition in the presence of zinc oxide. The residue is dissolved in sulfuric acid and reacted with ammonium molybdate and hydrazine sulfate. The absorbance of the ''Molybdenum Blue'' complex is proportional to the phosphorus concentration in the sample and is read at approximately 820 nm in a 5-cm cell.

4. *Apparatus.*

4.1 Buret, 10-ml capacity, 0.05-ml subdivisions.

4.2 Constant-Temperature Bath, equipped to hold several 100-ml volumetric flasks submerged to the mark. Bath must have a large enough reservoir or heat capacity to keep the temperature at 180 to 190° F (82.2 to 87.8° C) during the entire period of sample heating.

NOTE 1: If the temperature of the hot water bath drops below 180° F (82.2° C) the color development may not be complete.

4.3 Cooling Bath, equipped to hold several 100-ml volumetric flasks submerged to the mark in ice water.

4.4 Filter Paper, for quantitative analysis, Class G for fine precipitates as defined in Specification D 1100.

4.5 Ignition Dish—Coors porcelain evaporating dish, glazed inside and outside, with pourout (size no. 00A, diameter 75 mm. capacity 70 ml).

4.6 Spectrophotometer, equipped with a tungsten lamp, a red-sensitive phototube capable of operating at 830 nm and with absorption cells that have a 5-cm light path.

4.7 Thermometer, range 50 to 220° F (10 to 105° C).

4.8 Volumetric Flask, 100-ml with ground-glass stopper.

4.9 Volumetric Flask, 1000-ml with ground-glass stopper.

4.10 Syringe, Luer-Lok, 10-ml equipped with 5-cm. 22-gage needle.

5. *Reagents.*

5.1 Purity of Reagents—Reagent grade chemicals shall be used in all tests. Unless otherwise indicated, it is intended that all reagents shall conform to the specifications of the Committee on Analytical Reagents of the American Chemical Society, where such specifications are available. Other grades may be used, provided it is first ascertained that the reagent is of sufficiently high purity to permit its use without lessening the accuracy of the determination.

5.2 Purity of Water—Unless otherwise indicated, references to water shall be understood to mean distilled water or water of equal purity.

5.3 Ammonium Molybdate Solution—Using graduated cylinders for measurement add slowly (Note 2), with continuous stirring, 225 ml of concentrated sulfuric acid to 500 ml of water contained in a beaker placed in a bath of cold water. Cool to room temperature and add 20 g of ammonium molybdate tetrahydrate ($(NH_4)_6 Mo_7 O_{24} \cdot 4H_2 O$). Stir until solution is complete and transfer to a 1000-ml flask. Dilute to the mark with water.

NOTE 2: Wear a face shield, rubber gloves, and a rubber apron when adding concentrated sulfuric acid to water.

5.4 Hydrazine Sulfate Solution—Dissolve 1.5 of hydrazine sulfate ($H_2 NNH_2 \cdot H_2 SO_4$) in 1 litre of water, measured with a graduated cylinder.

NOTE 3: This solution is not stable. Keep it tightly stoppered and in the dark. Prepare a fresh solution after 3 weeks.

5.5 Molybdate-Hydrazine Reagent—Pipet 25 ml of ammonium molybdate solution into a 100-ml volumetric flask containing approximately 50 ml of water, add by pipet 10 ml of $N_2 NNH_2 \cdot H_2 SO_4$ solution, and dilute to 100 ml with water.

NOTE 4: This reagent is unstable and should be used within about 4 h. Prepare it immediately before use. Each determination (including the blank) uses 50 ml.

5.6 Phosphorus, Standard Solution (10.0 µg P/ml)—Pipet 10 ml of stock standard phosphorus solution into a 1000-ml volumetric flask and dilute to the mark with water.

5.7 Phosphorus, Stock Standard Solution (1.00 mg P/ml)—Dry approximately 5 g of potasium dihydrogen phosphate ($KH_2 PO_4$ in an oven at 221 to 230° F (105 to 110° C) for 3 h. Dissolve 4.393±0.002 g of the reagent in 150

ml, measured with a graduated cylinder, of H_2SO_4(1+10) contained in a 1000-ml volumetric flask. Dilute with water to the mark.

5.8 Sulfuric Acid (1+10)—Using graduated cylinders for measurement add slowly (Note 2), with continuous stirring, 100-ml of concentrated sulfuric acid (H_2SO_4, sp gr 1.84) to 1 litre of water contained in a beaker placed in a bath of cold water.

5.9 Zinc Oxide.

NOTE 5: High-bulk density zinc oxide may cause spattering. Density of approximately 0.5 g/cm^3 has been found satisfactory.

6. *Calibration.*

6.1 Transfer by buret, or a volumetric transfer pipet, 0.0, 0.5, 1.0, 1.5, 2.0, 3.0, 3.5, and 4.0 ml of phosphorus standard solution into 100-ml volumetric flasks.

6.2 Pipet 10 ml of H_2SO_4 (1+10) into each flask. Mix immediately by swirling.

6.3 Prepare the molybdate-hydrazine solution. Prepare sufficient volume of reagent based on the number of samples being analyzed.

6.4 Pipet 50 ml of the molybdate-hydrazine solution to each volumetric flask. Mix immediately by swirling.

6.5 Dilute to 100 ml with water.

6.6 Mix well and place in the constant-temperature bath so that the contents of the flask are submerged below the level of the bath. Maintain bath temperature at 180 to 190° F (82.2 to 87.8° C) for 25 min (Note 1).

6.7 Transfer the flask to the cooling bath and cool the contents rapidly to room temperature. Do not allow the samples to cool more than 5° F (2.8° C) below room temperature.

NOTE 6: Place a chemically clean thermometer in one of the flasks to check the temperature.

6.8 After cooling the flasks to room temperature, remove them from the cooling water bath and allow them to stand for 10 min. at room temperature.

6.9 Using the 2.0-ml phosphorus standard in a 5-cm cell, determine the wavelength near 820 nm that gives maximum absorbance. The wavelength giving maximum absorbance should not exceed 830 nm.

6.9.1 Using a red-sensitive phototube and 5-cm cells, adjust the spectrophotometer to zero absorbance at the wavelength of maximum absorbance using distilled water in both cells. Use the wavelength of maximum absorbance in the determination of calibration readings and future sample readings.

6.9.2 The use of 1-cm cells for the higher concentrations is permissible.

6.10 Measure the absorbance of each calibration sample including the blank (0.0 ml phosphorus standard) at the wavelength of maximum absorbance with distilled water in the reference cell.

NOTE 7: Great care must be taken to avoid possible contamination. If the absorbance of the blank exceeds 0.04 (for 5-cm cell), check for source of contamination. It is suggested that the results be disregarded and the test be rerun with fresh reagents and clean glassware.

6.11 Correct the absorbance of each standard solution by subtracting the absorbance of the blank (0 ml phosphorus standard).

6.12 Prepare a calibration curve by plotting the corrected absorbance of each standard solution against micrograms of phosphorus. One millilitre of phosphorus standard solution provides 10 µg of phosphorus.

7. *Sampling.*

7.1 Selection of the size of the sample to be tested depends on the expected concentration of phosphorous in the sample. If a concentration of phosphorus is suspected to be less than 0.0038 g/gal (1.0 mg/litre), it will be necessary to use 10 ml of sample.

NOTE 8: Two grams of zinc oxide cannot absorb this volume of gasoline. Therefore the 10-ml sample is ignited in aliquots of 2 ml in the presence of 2 g of zinc oxide.

7.2 The following table serves as a guide for selecting sample size:

Phosphorus, milligrams per liter	Equivalent, grams per gallon	Sample size, milliliter
2.5 to 40	0.01 to 0.15	1.00
1.3 to 20	0.005 to 0.075	2.00
0.9 to 13	0.0037 to 0.05	3.00
1 or less	0.0038 or less	10.00

8. *Procedure.*

8.1 Transfer 2±0.2 g of zinc oxide into a conical pile in a clean, dry, unetched ignition dish.

NOTE 9: In order to obtain satisfactory accuracy with the small amounts of phosphorus involved, it is necessary to take extensive precautions in handling. The usual precautions of cleanliness, careful manipulation, and avoidance of contamination should be scrupulously observed; also, all glassware should be cleaned before use, with cleaning acid or by some procedure that does not involve use of commercial detergents. These compounds often contain alkali phosphates which are strongly adsorbed by glass surfaces and are not removed by ordinary rinsing. It is desirable to segregate a special stock of glassware for use only in the determination of phosphorus.

8.2 Make a deep depression in the center of the zinc oxide pile with a stirring rod.

8.3 Pipet the gasoline sample (Note 10) (see 7.2 for suggested sample volume) into the depression in the zinc oxide. Record the temperature of the fuel if the phosphorus content is required at 60° F (15.6° C) and make correction as directed in 9.2.

NOTE 10: For the 10-ml sample use multiple additions and a syringe. Hold the tip of the

needle at approximately ⅔ of the depth of the zinc oxide layer and slowly deliver 2 ml of the sample: fast sample delivery may give low results. Give sufficient time for the gasoline to be absorbed by the zinc oxide. Follow step 8.6. Cool the dish to room temperature. Repeat steps 8.3 and 8.6 until all the sample has been burned. Safety—cool the ignition dish before adding the additional aliquots of gasoline to avoid a flash fire.

8.4 Cover the sample with a small amount of fresh zinc oxide from reagent bottle (use the tip of a small spatula to deliver approximately 0.2 g). Tap the sides of the ignition dish to pack the zinc oxide.

8.5 Prepare the blank, using the same amount of zinc oxide in an ignition dish.

8.6 Ignite the gasoline, using the flame from a bunsen burner. Allow the gasoline to burn to extinction (NOTE 10).

8.7 Place the ignition dishes containing the sample and blank in a hot muffle furnace set at a temperature of 1150 to 1300° F (621 to 704° C) for 10 min. Remove and cool the ignition dishes. When cool gently tap the sides of the dish to loosen the zinc oxide. Again place the dishes in the muffle furnace for 5 min. Remove and cool the ignition dishes to room temperature. The above treatment is usually sufficient to burn the carbon. If the carbon is not completely burned off place the dish into the oven for further 5-min. periods.

NOTE 11: Step 8.7 may also be accomplished by heating the ignition dish with a Meker burner gradually increasing the intensity of heat until the carbon from the sides of the dish has been burned, then cool to room temperature.

8.8 Pipet 25 ml of H_2SO_4 (1+10) to each ignition dish. While pipeting, carefully wash all traces of zinc oxide from the sides of the ignition dish.

8.9 Cover the ignition dish with a borosilicate watch glass and warm the ignition dish on a hot plate until the zinc oxide is completely dissolved.

8.10 Transfer the solution through filter paper to a 100-ml volumetric flask. Rinse the watch glass and the dish several times with distilled water (do not exceed 25 ml) and transfer the washings through the filter paper to the volumetric flask.

8.11 Prepare the molybdate-hydrazine solution.

8.12 Add 50 ml of the molybdate-hydrazine solution by pipet to each 100-ml volumetric flask. Mix immediately by swirling.

8.13 Dilute to 100 ml with water and mix well. Remove stoppers from flasks after mixing.

8.14 Place the 100-ml flasks in the constant-temperature bath for 25 min. so that the contents of the flasks are below the liquid level of the bath. The temperature of the bath should be 180 to 190° F (82.2 to 87.8° C) (NOTE 1).

8.15 Transfer the 100-ml flasks to the cooling bath and cool the contents rapidly to room temperature (NOTE 6).

8.16 Allow the samples to stand at room temperature before measuring the absorbance.

NOTE 12: The color developed is stable for at least 4 h.

8.17 Set the spectrophotometer to the wavelength of maximum absorbance as determined in 6.9. Adjust the spectrophotometer to zero absorbance, using distilled water in both cells.

8.18 Measure the absorbance of the samples at the wavelength of maximum absorbance with distilled water in the reference cell.

8.19 Subtract the absorbance of the blank from the absorbance of each sample (NOTE 7).

8.20 Determine the micrograms of phosphorous in the sample, using the calibration curve from 6.12 and the corrected absorbance.

9. *Calculations.*

9.1 Calculate the milligrams of phosphorus per litre of sample as follows:

$$P, \text{ mg/litre} = P/V$$

where:

P=micrograms of phosphorus read from calibration curve, and

V=millilitres of gasoline sample.

To convert to grams of phosphorus per U.S. gallon of sample, multiply mg P/litre by 0.0038.

9.2 If the gasoline sample was taken at a temperature other than 60° F (15.6° C) make the following temperature correction:

$$\text{mg P/litre at } 15.6^\circ\text{C} = [\text{mg P/litre at t}]\,[1+0.001\,(t-15.6)]$$

where:

t=observed temperature of the gasoline, ° C.

9.3 Concentrations below 2.5 mg/litre or 0.01 g/gal should be reported to the nearest 0.01 mg/litre or 0.0001 g/U.S. gal.

9.3.1 For higher concentrations, report results to the nearest 1 mg P/litre or 0.005 g P/U.S. gal.

10. *Precision.*

10.1 The following criteria should be used for judging the acceptability of results (95 percent confidence):

10.2 Repeatability—Duplicate results by the same operator should be considered suspect if they differ by more than the following amounts:

g P/U.S. gal (mg· P/litre)	Repeatability
0.0008 to 0.005 (0.2 to 1.3) ..	0.0002 g P/U.S. gal (0.05 mg P/litre).
0.005 to 0.15 (1.3 to 40)	7% of the mean.

10.3 Reproducibility—The results submitted by each of two laboratories should not be

considered suspect unless they differ by more than the following amounts:

g P/U.S. gal (mg· P/litre)	Reproducibility
0.0008 to 0.005 (0.2 to 1.3) ..	0.0005 g P/U.S. gal (0.13 mg P/litre).
0.005 to 0.15 (1.3 to 40)	13% of the mean.

[39 FR 24891, July 8, 1974; 39 FR 25653, July 12, 1974]

APPENDIX B TO PART 80—TEST METHODS FOR LEAD IN GASOLINE

METHOD 1—STANDARD METHOD TEST FOR LEAD IN GASOLINE BY ATOMIC ABSORPTION SPECTROMETRY

1. *Scope.*

1.1. This method covers the determination of the total lead content of gasoline. The procedure's calibration range is 0.010 to 0.10 gram of lead/U.S. gal. Samples above this level should be diluted to fall within this range or a higher level calibration standard curve must be prepared. The higher level curve must be shown to be linear and measurement of lead at these levels must be shown to be accurate by the analysis of control samples at a higher level of alkyl lead content. The method compensates for variations in gasoline composition and is independent of lead alkyl type.

2. *Summary of method.*

2.1 The gasoline sample is diluted with methyl isobutyl ketone and the alkyl lead compounds are stabilized by reaction with iodine and a quarternary ammonium salt. The lead content of the sample is determined by atomic absorption flame spectrometry at 2833 A, using standards prepared from reagent grade lead chloride. By the use of this treatment, all alkyl lead compounds give identical response.

3. *Apparatus.*

3.1 Atomic Absorption Spectometer, capable of scale expansion and nebulizer adjustment, and equipped with a slot burner and premix chamber for use with an air-acetylene flame.

3.2 Volumetric Flasks, 50-ml, 100-ml, 250-ml, and one litre sizes.

3.3 Pipets, 2-ml, 5-ml, 10-ml, 20-ml, and 50-ml sizes.

3.4 Micropipet, 100-µl, Eppendorf type or equivalent.

4. *Reagents.*

4.1 Purity of Reagents—Reagent grade chemicals shall be used in all tests. Unless otherwise indicated, it is intended that all reagents shall conform to the specifications of the Committee on Analytical Reagents of the American Chemical Society, where such specifications are available. Other grades may be used, provided it is first ascertained that the reagent is of sufficiently high purity to permit its use without lessening the accuracy of the determination.

4.2 Purity of Water—Unless otherwise indicated, references to water shall be understood to mean distilled water or water of equal purity.

4.3 Aliquat 336 (tricapryl methyl ammonium chloride).

4.4 Aliquat 336/MIBK Solution (10 percent v/v)—Dissolve and dilute 100 ml (88.0 g) of Aliquat 336 with MIBK to one liter.

4.5 Aliquat 336/MIBK Solution (1 percent v/v)—Dissolve and dilute 10 ml (8.8 g) of Aliquat 336 with MIBK to one liter.

4.6 Iodine Solution—Dissolve and dilute 3.0 g iodine crystals with Toluene to 100 ml.

4.7 Lead Chloride.

4.8 Lead-Sterile Gasoline—Gasoline containing less than 0.005 g Pb/gal.

4.9 Lead, Standard Solution (5.0 g Pb/gal)—Dissolve 0.4433 g of lead chloride ($PbCl_2$) previously dried at 105° C for 3 h in about 200 ml of 10 percent Aliquat 336/MIBK solution in a 250-ml volumetric flask. Dilute to the mark with the 10 percent Aliquat solution, mix, and store in a brown bottle having a polyethylene-lined cap. This solution contains 1,321 µg Pb/ml, which is equivalent to 5.0 g Pb/gal.

4.10 Lead, Standard Solution (1.0 g Pb/gal)—By means of a pipet, accurately transfer 50.0 ml of the 5.0 g Pb/gal solution to a 250-ml volumetric flask, dilute to volume with 1 percent Aliquat/MIBK solution. Store in a brown bottle having a polyethylene-lined cap.

4.11 Lead, Standard Solutions (0.02, 0.05, and 0.10 g Pb/gal)—Transfer accurately by means of pipets 2.0, 5.0, and 10.0 ml of the 1.0-g Pb/gal solution to 100-ml volumetric flasks; add 5.0 ml of 1 percent Aliquat 336 solution to each flask; dilute to the mark with MIBK. Mix well and store in bottles having polyethylene-lined caps.

4.12 Methyl Isobutyl Ketone (MIBK). (4-methyl-2-pentanone).

5. *Calibration.*

5.1 Preparation of Working Standards—Prepare three working standards and a blank using the 0.02, 0.05, and 0.10-g Pb/gal standard lead solutions described in 4.11.

5.1.1 To each of four 50-ml volumetric flasks containing 30 ml of MIBK, add 5.0 ml of low lead standard solution and 5.0 ml of lead-free gasoline. In the case of the blank, add only 5.0 ml of lead-free gasoline.

5.1.2 Add immediately 0.1 ml of iodine/toluene solution by means of the 100-µl Eppendorf pipet. Mix well.[1]

5.1.3 Add 5 ml of 1 percent Aliquat 336 solution and mix.

[1] EPA practice will be to mix well by shaking vigorously for approximately one minute.

5.1.4 Dilute to volume with MIBK and mix well.

5.2 Preparation of Instrument—Optimize the atomic absorption equipment for lead at 2833 A. Using the reagent blank, adjust the gas mixture and the sample aspiration rate to obtain an oxidizing flame.

5.2.1 Aspirate the 0.1-g Pb/gal working standard and adjust the burner position to give maximum response. Some instruments require the use of scale expansion to produce a reading of 0.150 to 0.170 for this standard.

5.2.2 Aspirate the reagent blank to zero the instrument and check the absorbances of the three working standards for linearity.

6. *Procedure.*

6.1 To a 50 ml volumetric flask containing 30 ml MIBK, add 5.0 ml of gasoline sample and mix.[2]

6.1.1 Add 0.10 ml (100 µl) of iodine/toluene solution and allow the mixture to react about 1 minute.[3]

6.1.2 Add 5.0 ml of 1 percent Aliquot 336/MIBK solution and mix.

6.1.3 Dilute to volume with MIBK and mix.

6.2 Aspirate the samples and working standards and record the absorbance values with frequent checks of the zero.

6.3 Any sample resulting in a peak greater than 0.05 g Pb/gal will be run in duplicate. Samples registering greater than 0.10 g Pb/gal should be diluted with iso-octane or unleaded fuel to fall within the calibration range or a higher level calibration standard curve must be prepared. The higher level curve must be shown to be linear and measurement of lead at these levels must be shown to be accurate by the analysis of control samples at a higher level of alkyl lead content.

7. *Calculations.*

7.1 Plot the absorbance values versus concentration represented by the working standards and read the concentrations of the samples from the graph.

8. *Precision.*

8.1 The following criteria should be used for judging the acceptability of results (95 percent confidence):

8.1.1 Repeatability—Duplicate results by the same operator should be considered suspect if they differ by more than 0.005 g/gal.

8.1.2 Reproductibility—The results submitted by each of two laboratories should not be considered suspect unless the two results differ by more than 0.01 g/gal.

METHOD 2—AUTOMATED METHOD TEST FOR LEAD IN GASOLINE BY ATOMIC ABSORPTION SPECTROMETRY

1. *Scope and application.*

1.1 This method covers the determination of the total lead content of gasoline. The procedure's calibration range is 0.010 to 0.10 gram of lead/U.S. gal. Samples above this level should be diluted to fall within this range or a higher level calibration standard curve must be prepared. The higher level curve must be shown to be linear and measurement of lead at these levels must be shown to be accurate by the analysis of control samples at a higher level of alkyl lead content. The method compensates for variations in gasoline composition and is independent of lead alkyl type.

1.2 This method may be used as an alternative to the Standard Method set forth above.

1.3 Where trade names or specific products are noted in the method, equivalent apparatus and chemical reagents may be used. Mention of trade names or specific products is for the assistance of the user and does not constitute endorsement by the U.S. Environmental Protection Agency.

2. *Summary of method.*

2.1 The gasoline sample is diluted with methly isobutyl ketone (MIBK) and the alkyl lead compounds are stabilized by reacting with iodine and a quarternary ammonium salt. An automated system is used to perform the diluting and the chemical reactions and feed the products to the atomic absorption spectrometer with an air-acetylene flame.

2.2 The dilution of the gasoline with MIBK compensates for severe non-atomic absorption, scatter from unburned carbon containing species and matrix effects caused in part by the burning characteristics of gasoline.

2.3 The *in-situ* reaction of alkyl lead in gasoline with iodine eliminates the problem of variations in response due to different alkyl types by leveling the response of all alkyl lead compounds.

2.4 The addition of the quarternary ammonium salt improves response and increases the stability of the alkyl iodide complex.

3. *Sample handling and preservation.*

3.1 Samples should be collected and stored in containers which will protect them from changes in the lead content of the gasoline such as from loss of volatile fractions of the gasoline by evaporation or leaching of the lead into the container or cap.

3.2 If samples have been refrigerated they should be brought to room temperature prior to analysis.

4. *Apparatus.*

4.1 AutoAnalyzer system consisting of:

4.1.1 Sampler 20/hr cam, 30/hr cam.

4.1.2 Proportioning pump.

4.1.3 Lead in gas manifold.

4.1.4 Disposable test tubes.

[2] The gasoline should be allowed to come to room temperature (25° C).

[3] See footnote 1 of section 5.1.2.

4.1.5 Two 2-liter and one 0.5 liter Erlenmeyer solvent displacement flasks. Alternatively, high pressure liquid chromatography (HPLC) or syringe pumps may be used.

4.2 Atomic Absorption Spectroscopy (AAS) Detector System consisting of:

4.2.1 Atomic absorption spectrometer.

4.2.2 10″ strip chart recorder.

4.2.3 Lead hollow cathode lamp or electrodeless discharge lamp (EDL).

5. *Reagents.*

5.1 Aliquat 336/MIBK solution (10% v/v): Dissolve and dilute 100 ml (88.0 g) of Aliquat 336 (Aldrich Chemical Co., Milwaukee, Wisconsin) with MIBK (Burdick & Jackson Lab., Inc., Muskegon, Michigan) to one liter.

5.2 Aliquat 336/iso-octane solution (1% v/v): Dissolve and dilute 10 ml (8.8 g) of Alquat 336 (reagent 5.1) with iso-octane to one liter.

5.3 Iodine solution (3% w/v): Dissolve and dilute 3.0 g iodine crystals (American Chemical Society) with toluene (Burdick & Jackson Lab., Inc., Muskegon, Michigan) to 100 ml.

5.4 Iodine working solution (0.24% w/v): Dilute 8 ml of reagent 5.3 to 100 ml with toluene.

5.5 Methyl isobutyl ketone (MIBK) (4-methlyl-2-pentanone).

5.6 Certified unleaded gasoline (Phillips Chemical Co., Borger, Texas) or iso-octane (Burdick & Jackson Lab, Inc., Muskegon, Michigan).

6. *Calibration standards.*

6.1 Stock 5.0 g Pb/gal Standard:

Dissolve 0.4433 gram of lead chloride ($PbCl_2$) previously dried at 105° C for 3 hours in 200 ml of 10% v/v Aliquat 336/MIBK solution (reagent 5.1) in a 250 ml volumetric flask. Dilute to volume with reagent 5.1 and store in an amber bottle.

6.2 Intermediate 1.0 g Pb/gal Standard:

Pipet 50 ml of the 5.0 g Pb/gal standard into a 250 ml volumetric flask and dilute to volume with a 1% v/v Aliquat 336/iso-octane solution (reagent 5.2). Store in an amber bottle.

6.3 Working 0.02, 0.05, 0.10 g Pb/gal Standards:

Pipet 2.0, 5.0, and 10.0 ml of the 1.0 g Pb/gal solution to 100 ml volumetric flasks. Add 5 ml of a 1% Aliquat 336/iso-octane solution to each flask. Dilute to volume with iso-octane. These solutions contain 0.02, 0.05, and 0.10 g Pb/gal in a 0.05% Aliquat 336/iso-octane solution.

7. *AAS Instrumental conditions.*

7.1 Lead hollow cathode lamp.

7.2 Wavelength: 283.3 nm.

7.3 Slit: 4 (0.7mm).

7.4 Range: UV.

7.5 Fuel: Acetylene (approx. 20 ml/min at 8 psi).

7.6 Oxidant: Air (approx. 65 ml/min at 31 psi).

7.7 Nebulizer: 5.2 ml/min.

7.8 Chart speed: 10 in/hr.

8. *Procedures.*

8.1 AAS start-up.

8.1.1 Assure that instrumental conditions have been optimized and aligned according to Section 7 and the instrument has had substantial time for warm-up.

8.2 Auto Analyzer start-up [see figure 1].

8.2.1 Check all pump tubing and replace as necessary. Iodine tubing should be changed daily. All pump tubing should be replaced after one week of use. Place the platen on the pump.

8.2.2 Withdraw any water from the sample wash cup and fill with certified unleaded gasoline (reagent 5.6).

8.2.3 Fill the 2-liter MIBK dilution displacement Erlenmeyer flask (reagent 5.5) and the 0.5 liter Aliquat 336/MIBK 1% v/v (reagent 5.2) displacement flask and place the rubber stopper glass tubing assemblies in their respective flasks.

8.2.4 Fill a 2-liter Erlenmeyer flask with distilled water. The water will be used to displace the solvents. Therefore, place the appropriate lines in this flask. This procedure is not relevant if syringe pumps are used.

8.2.5 Fill the final debubbler reverse displacement 2-liter Erlenmeyer flask with distilled water and place the rubber stopper glass tubing assembly in the flask.

8.2.6 Place the appropriate lines for the iodine reagent (reagent 5.4) and the wash solution (reagent 5.6) in their respective bottles.

8.2.7 Start the pump and connect the aspiration line from the manifold to the AAS.

8.2.8 Some initial checks to assure that the reagents are being added are:

a. A good uniform bubble pattern.

b. Yellow color evident due to iodine in the system.

c. No surging in any tubing.

8.3 Calibration.

8.3.1 Turn the chart drive on and obtain a steady baseline.

8.3.2 Load standards and samples into sample tray.

8.3.3 Start the sampler and run the standards (Note: first check the sample probe positioning with an empty test tube).

8.3.4 Check the linearity of calibration standards response and slope by running a least squares fit. Check these results against previously obtained results. They should agree within 10%.

8.3.5 If the above is in control then start the sample analysis.

8.4 Sample Analysis.

8.4.1 To minimize gasoline vapor in the laboratory, load the sample tray about 5–10 test tubes ahead of the sampler.

8.4.2 Record the sample number on the strip chart corresponding to the appropriate peak.

8.4.3 Every ten samples run the high calibration standard and a previously analyzed sample (duplicate). Also let the sampler skip to check the baseline.

8.4.4 After an acceptable peak (within the calibration range) is obtained, pour the excess sample from the test tube into the waste gasoline can.

8.4.5 Any sample resulting in a peak greater than 0.05 g Pb/gal will be run in duplicate. Samples registering greater than 0.10 g Pb/gal should be diluted with iso-octane or unleaded fuel to fall within the calibration range or a higher level calibration standard curve must be prepared. The higher level curve must be shown to be linear and measurement of lead at these levels must be shown to be accurate by the analysis of control samples at a higher level of alkyl lead content.

8.5 Shut Down.

8.5.1 Replace the solvent displacement flask with flasks filled with distilled water. Also place all other lines in a beaker of distilled water. Rinse the system with distilled water for 15 minutes.

8.5.2 Withdraw the gasoline from the wash cup and fill with water.

8.5.3 Dispose of all solvent waste in waste glass bottles.

8.5.4 Turn the AAS off after extinguishing the flame. Also turn the recorder and pump off. Remove the platen and release the pump tubing.

8.5.5 Shut the acetylene off at the tank and bleed the line.

9. *Quality control.*

9.1 Precision.

9.1.1 All duplicate results should be considered suspect if they differ by more than 0.005 g Pb/gal.

9.2 Accuracy.

9.2.1 All quality control standard checks should agree within 10% of the nominal value of the standard.

9.2.2 All spikes should agree within 10% of the known addition.

10. *Past quality control data.*

10.1 Precision.

10.1.1 Duplicate analysis for 156 samples in a single laboratory has resulted in an average difference of 0.00011 g Pb/gal with a standard deviation of 0.0023.

10.1.2 Replicate analysis in a single laboratory (greater than 5 determinations) of samples at concentrations of 0.010, 0.048, and 0.085 g Pb/gal resulted in relative standard deviations of 4.2%, 3.5%, and 3.3% respectively.

10.2 Accuracy.

10.2.1 The analysis of National Bureau of Standards (NBS) lead in reference fuel of known concentrations in a single laboratory has resulted in found values deviating from the true value for 11 determinations of 0.0322 g Pb/gal by an average of 0.56% with a standard deviation of 6.8%, for 15 determinations of 0.0519 g Pb/gal by an average of -1.1% with a standard deviation of 5.8%, and for 7 determinations of 0.0725 g Pb/gal by an average of 3.5% with a standard deviation of 4.8%.

10.2.2 Twenty-three analyses of blind reference samples in a single laboratory (U.S. EPA, RTP, N.C.) have resulted in found values differing from the true value by an average of -0.0009 g Pb/gal with a standard deviation of 0.004.

10.2.3 In a single laboratory, the average percent recovery of 108 spikes made to samples was 101% with a standard deviation of 5.6%.

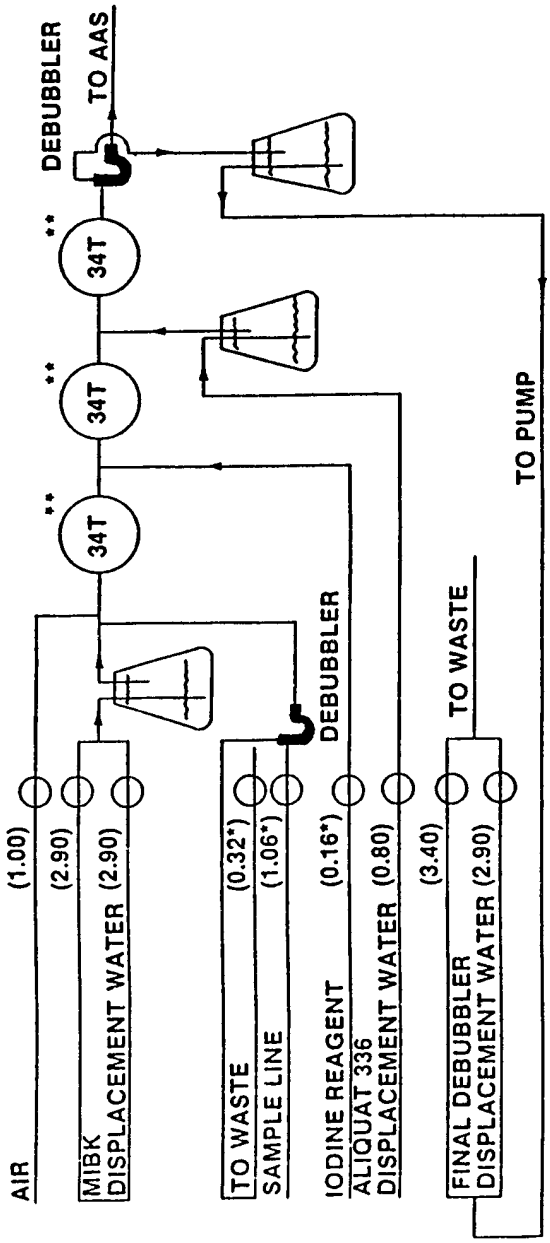

Figure 1

Flow Diagram for the Automated System. (*: Solvaflex pump tubing, **: Technicon part no. 157-0225) Numbers in parentheses refer to the flow rate (ml/min.).

METHOD 3—TEST FOR LEAD IN GASOLINE BY X-RAY SPECTROMETRY

1. *Scope and application.*

1.1 This method covers the determination of the total lead content of gasoline. The procedure's calibration range is 0.010 to 5.0 grams of lead/U.S. gallon. Samples above this level should be diluted to fall within the range of 0.05 to 5.0 grams of lead/U.S. gallon. The method compensates for variations in gasoline composition and is independent of lead alkyl type.

1.2 This method may be used as an alternative to Method 1—Standard Method Test for Lead in Gasoline by Atomic Absorption Spectrometry, or to Method 2—Automated Method Test for Lead in Gasoline by Atomic Absorption Spectrometry.

1.3 Where trade names or specific products are noted in the method, equivalent apparatus and chemical reagents may be used. Mention of trade names or specific products is for the assistance of the user and does not constitute endorsement by the U.S. Environmental Protection Agency.

2. *Summary of method.*

2.1 A portion of the gasoline sample is placed in an appropriate holder and loaded into an X-ray spectrometer. The ratio of the net X-ray intensity of the lead L alpha radiation to the net intensity of the incoherently scattered tungsten L alpha radiation is measured. The lead content is determined by reference to a linear calibration equation which relates the lead content to the measured ratio.

2.2 The incoherently scattered tungsten radiation is used to compensate for variations in gasoline samples.

3. *Sample handling and preservation.*

3.1 Samples should be collected and stored in containers which will protect them from changes in the lead content of the gasoline, such as loss of volatile fractions of the gasoline by evaporation or leaching of the lead into the container or cap.

3.2 If samples have been refrigerated they should be brought to room temperature prior to analysis.

3.3 Gasoline is extremely flammable and should be handled cautiously and with adequate ventilation. The vapors are harmful if inhaled and prolonged breathing of vapors should be avoided. Skin contact should be minimized. See precautionary statements in Annex Al.3.

4. *Apparatus.*

4.1 X-ray Spectrometer, capable of exciting and measuring the fluorescence lines mentioned in 2.1 and of being operated under the following instrumental conditions or others giving equivalent results: a tungsten target tube operated at 50 kV, a lithium fluoride analyzing crystal, an air or helium optical path and a proportional or scintillation detector.

4.2 Some manufacturers of X-ray Spectrometer units no longer allow use of air as the beam path medium because the X-ray beam produces ozone, which may degrade seals and electronics. In addition, use of the equipment with liquid gasoline in close proximity to the hot X-ray tube could pose flammability problems with any machine in case of a rupture of the sample container. Therefore, use of the helium alternative is recommended.

5. *Reagents.*

5.1 Isooctane. Isooctane is flammable and the vapors may be harmful. See precautions in Annex Al.1.

5.2 Lead standard solution, in isooctane, toluene or a mixture of these two solvents, containing approximately 5 gm Pb/U.S. gallon may be prepared from a lead-in-oil concentrate such as those prepared by Conostan (Conoco, Inc., Ponca City, Oklahoma). Isooctane and toluene are flammable and the vapors may be harmful. See precautionary statements in Annex Al.1 and Al.2.

6. *Calibration.*

6.1 Make exact dilutions with isooctane of the lead standard solution to give solutions with concentrations of 0.01, 0.05, 0.10, 0.50, 1.0, 3.0 and 5.0 g Pb/U.S. gallon. If a more limited range is desired as required for linearity, such range shall be covered by at least five standard solutions approximately equally spaced and this range shall not be exceeded by any of the samples. Place each of the standard solutions in a sample cell using techniques consistent with good operating practice for the spectrometer employed. Insert the sample in the spectrometer and allow the spectrometer atmosphere to reach equilibrium (if appropriate). Measure the intensity of the lead L alpha peak at 1.175 angstroms, the Compton scatter peak of the tungsten L alpha line at 1.500 angstroms and the background at 1.211 angstroms. Each measured intensity should exceed 200,000 counts or the time of measurement should be at least 30 seconds. The relative standard deviation of each measurement, based on counting statistics, should be one percent or less. The Compton scatter peak given above is for 90° instrument geometry and should be changed for other geometries. The Compton scatter peak (in angstroms) is found at the wavelength of the tungsten L alpha line plus 0.024 (1-cos phi), where phi is the angle between the incident radiation and the take-off collimator.

6.2 For Each of the standards, as well as for an isooctane blank, determine the net lead intensity by subtracting the corrected background from the gross intensity. Determine the corrected background by multiplying the intensity of the background at 1.211

angstroms by the following ratio obtained on an isooctane blank:

$$\frac{\text{Background at 1.175 angstroms}}{\text{Background at 1.211 angstroms}}$$

6.3 Determine the corrected lead intensity ratio, which is the net lead intensity corrected for matrix effects by division by the net incoherently scattered tungsten radiation. The net scattered intensity is calculated by subtracting the background intensity at 1.211 angstroms from the gross intensity of the incoherently scattered tungsten L alpha peak. The equation for the corrected lead intensity ratio follows:

$$R = \frac{\text{Lead L alpha–background}}{\text{Incoherent tungsten L alpha–corrected background}}$$

6.4 Obtain a linear calibration curve by performing a least squares fit of the corrected lead intensity ratios to the standard concentrations.

7. *Procedure.*

7.1 Prepare a calibration curve as described in 6. Since the scattered tungsten radiation serves as an internal standard, the calibration curve should serve for at least several days. Each day the suitability of the calibration curve should be checked by analyzing several National Bureau of Standards (NBS) lead-in-reference-fuel standards or other suitable standards.

7.2 Determine the corrected lead intensity ratio for a sample in the same manner as was done for the standards. The samples should be brought to room temperature before analysis.

7.3 Determine the lead concentration of the sample from the calibration curve. If the sample concentration is greater than 5.0 g Pb/U.S. gallon or the range calibrated for in 6.1, the sample should be diluted so that the result is within the calibration span of the instrument.

7.4 Quality control standards, such as NBS standard reference materials, should be analyzed at least once every testing session.

7.5 For each group of ten samples, a spiked sample should be prepared by adding a known amount of lead to a sample. This known addition should be at least 0.05 g Pb/U.S. gallon, at least 50% of the measured lead content of the unspiked sample, and not more than 200% of the measured lead content of the unspiked sample (unless the minimum addition of 0.05 g Pb/U.S. gallon exceeds 200%). Both the spiked and unspiked samples should be analyzed.

8. *Quality control.*

8.1 The difference between duplicates should not exceed 0.005 g Pb/U.S. gallon or a relative difference of 6%.

8.2 All quality control standard check samples should agree within 10% of the nominal value of the standard.

8.3 All spiked samples should have a percent recovery of 100% ±10%. The percent recovery, P, is calculated as follows:

$$P = 100 \times (A - B)/K$$

where

A= the analytical result from the spiked sample, B= the analytical result from the unspiked sample, and K= the known addition.

8.4 The difference between independent analyses of the same sample in different laboratories should not exceed 0.01 g Pb/U.S. gallon or a relative difference of 12%.

9. *Past quality control data.*

9.1 Duplicate analysis for 26 samples in the range of 0.01 to 0.10 g Pb/U.S. gallon resulted in an average relative difference of 5.2% with a standard deviation of 5.4%. Duplicate analysis of 14 samples in the range 0.1 to 0.5 g Pb/U.S. gallon resulted in an average relative difference of 2.3% with a standard deviation of 2.0. Duplicate analysis of 47 samples in the range of 0.5 to 5 g Pb/U.S. gallon resulted in an average relative difference of 2.1% with a standard deviation of 1.8%.

9.2 The average percent recovery for 23 spikes made to samples in the 0.0 to 0.1 g Pb/U.S. gallon range was 103% with a standard deviation of 3.2%. For 42 spikes made to samples in the 0.1 to 5.0 g Pb/U.S. gallon range, the average percent recovery was 102% with a standard deviation of 4.2%.

9.3 The analysis of National Bureau of Standards lead-in-reference-fuel standards of known concentrations in a single laboratory has resulted in found values deviating from the true value for 14 determinations of 0.0490 g Pb/U.S. gallon by an average of 2.8% with a standard deviation of 6.4%, for 11 determinations of 0.065 g Pb/U.S. gallon by an average of 4.4% with a standard deviation of 2.9%, and for 15 determinations of 1.994 g Pb/U.S. gallon by an average of 0.3% with a standard deviation of 1.3%.

9.4 Eighteen analyses of reference samples (U.S. EPA, Research Triangle Park, NC) have resulted in found values differing from the true value by an average of 0.0004 g Pb/

U.S. gallon with a standard deviation of 0.004 g Pb/U.S. gallon.

ANNEX

A1. Precautionary Statements

A1.1 ISOOCTANE

Danger—Extremely flammable. Vapors harmful if inhaled.
Vapor may cause flash fire.
Keep away from heat, sparks, and open flame.
Vapors are heavier than air and may gather in low places, resulting in explosion hazard.
Keep container closed.
Use adequate ventilation.
Avoid buildup of vapors.
Avoid prolonged breathing of vapor or spray mist.
Avoid prolonged or repeated skin contact.

A1.2 TOLUENE

Warning—Flammable. Vapor harmful.
Keep away from heat, sparks, and open flame.
Keep container closed.
Use with adequate ventilation.
Avoid breathing of vapor or spray mist.
Avoid prolonged or repeated contact with skin.

A1.3 GASOLINE

Danger—Extremely flammable. Vapors harmful if inhaled.
Vapor may cause flash fire.
Keep away from heat, sparks, and open flame.
Vapors are heavier than air and may gather in low places, resulting in explosion hazard.
Keep container closed.
Use adequate ventilation.
Avoid buildup of vapors.
Avoid prolonged breathing of vapor or spray mist.
Avoid prolonged or repeated skin contact.

[39 FR 24891, July 8, 1974; 39 FR 25653, July 12, 1974; 39 FR 26287, July 18, 1974, as amended at 47 FR 765, Jan. 7, 1982; 52 FR 259, Jan. 5, 1987; 56 FR 13768, Apr. 4, 1991]

APPENDIX C TO PART 80—[RESERVED]

APPENDIX D TO PART 80—SAMPLING PROCEDURES FOR FUEL VOLATILITY

1. Scope.

1.1 This method covers procedures for obtaining representative samples of gasoline for the purpose of testing for compliance with the Reid vapor pressure (RVP) standards set forth in §80.27.

2. Summary of method.

2.1 It is necessary that the samples be truly representative of the gasoline in question. The precautions required to ensure the representative character of the samples are numerous and depend upon the tank, carrier, container or line from which the sample is being obtained, the type and cleanliness of the sample container, and the sampling procedure that is to be used. A summary of the sampling procedures and their application is presented in Table 1. Each procedure is suitable for sampling a material under definite storage, transportation, or container conditions. The basic principle of each procedure is to obtain a sample in such manner and from such locations in the tank or other container that the sample will be truly representative of the gasoline.

3. Description of terms.

3.1 *Average sample* is one that consists of proportionate parts from all sections of the container.

3.2 *All-levels sample* is one obtained by submerging a stoppered beaker or bottle to a point as near as possible to the draw-off level, then opening the sampler and raising it at a rate such that it is 70–85% full as it emerges from the liquid. An all-levels sample is not necessarily an average sample because the tank volume may not be proportional to the depth and because the operator may not be able to raise the sampler at the variable rate required for proportionate filling. The rate of filling is proportional to the square root of the depth of immersion.

3.3 *Running sample* is one obtained by lowering an unstoppered beaker or bottle from the top of the gasoline to the level of the bottom of the outlet connection or swing line, and returning it to the top of the gasoline at a uniform rate of speed such that the beaker or bottle is 70–85% full when withdrawn from the gasoline.

3.4 *Spot sample* is one obtained at some specific location in the tank by means of a thief bottle, or beaker.

3.5 *Top sample* is a spot sample obtained 6 inches (150 mm) below the top surface of the liquid (Figure 1).

3.6 *Upper sample* is a spot sample taken at the mid-point of the upper third of the tank contents (Figure 1).

3.7 *Middle sample* is a spot sample obtained from the middle of the tank contents (Figure 1).

3.8 *Lower sample* is a spot sample obtained at the level of the fixed tank outlet or the swing line outlet (Figure 1).

3.9 *Clearance sample* is a spot sample taken 4 inches (100 mm) below the level of the tank outlet (Figure 1).

3.10 *Bottom sample* is one obtained from the material on the bottom surface of the tank, container, or line at its lowest point.

3.11 *Drain sample* is one obtained from the draw-off or discharge valve. Occasionally, a drain sample may be the same as a bottom sample, as in the case of a tank car.

3.12 *Continuous sample* is one obtained from a pipeline in such manner as to give a representative average of a moving stream.

3.13 *Mixed sample* is one obtained after mixing or vigorously stirring the contents of the original container, and then pouring out or drawing off the quantity desired.

3.14 *Nozzle sample* is one obtained from a gasoline pump nozzle which dispenses gasoline from a storage tank at a retail outlet or a wholesale purchaser-consumer facility.

4. Sample containers.

4.1 Sample containers may be clear or brown glass bottles, or cans. The clear glass bottle is advantageous because it may be examined visually for cleanliness, and also allows visual inspection of the sample for free water or solid impurities. The brown glass bottle affords some protection from light. Cans with the seams soldered on the exterior surface with a flux of rosin in a suitable solvent are preferred because such a flux is easily removed with gasoline, whereas many others are very difficult to remove. If such cans are not available, other cans made with a welded construction that are not affected by, and that do not affect, the gasoline being sampled are acceptable.

4.2 *Container closure.* Closure devices may be used as long as they meet the following test: The quality of closures and containers must be determined by the particular laboratory or company doing the testing through the analysis of at least six sample pairs of gasoline and gasoline-oxygenate blends. The six sample pairs must include at least one pair of ethanol at 10 percent and one pair of MTBE at 15 percent. The second half of the pair must be analyzed in a period of no less than 90 days after the first. The data obtained must meet the following criteria and should be made available to the EPA upon request;

n=number of pairs

d=duplicate bottle's-initial bottle's vapor pressure

t=student t statistic; the double sided 95% confidence interval for n−1 degrees of freedom

$\Sigma\ d/n \pm (2)^{1/2} * t * ((\Sigma\ d^2 - (\Sigma\ d)^2/n)/(n-1))^{1/2} \leq 0.38$ psi

4.2.1 Screw caps must be protected by material that will not affect petroleum or petroleum products. A phenolic screw cap with a teflon coated liner may be used, since it has met the requirements of the above performance test upon EPA analysis.

4.3 *Cleaning procedure.* The method of cleaning all sample containers must be consistent with the residual materials in the container and must produce sample containers that are clean and free of water, dirt, lint, washing compounds, naphtha or other solvents, soldering fluxes, and acids, corrosion, rust, and oil. New sample containers should be inspected and cleaned if necessary. Dry either the container by passing a current of clean, warm air through the container or by allowing it to air dry in a clean area at room temperature. When dry, stopper or cap the container immediately.

5. Sampling apparatus.

5.1 Sampling apparatus is described in detail under each of the specific sampling procedures. Clean, dry, and free all sampling apparatus from any substance that might contaminate the material, using the procedure described in 4.3.

6. Time and place of sampling.

6.1 When loading or discharging gasoline, take samples from both shipping and receiving tanks, and from the pipeline if required.

6.2 *Ship or barge tanks.* Sample each product after the vessel is loaded or just before unloading.

6.3 *Tank cars.* Sample the product after the car is loaded or just before unloading.

NOTE: When taking samples from tanks suspected of containing flammable atmospheres, precautions should be taken to guard against ignitions due to static electricity. No object or material should be lowered into or suspended in a compartment of a tank which is being filled. A recommended waiting period of no less than five minutes after cessation of pumping will generally permit a substantial relaxation of the electrostatic charge for small volume vessels such as tank cars and tank trucks; under certain conditions a longer period may be deemed advisable. A recommended waiting period of no less than 30 minutes will generally permit a substantial relaxation of the electrostatic charge for large volume vessels such as storage tanks or ship tanks; under certain conditions a longer period may be deemed advisable.

7. Obtaining samples.

7.1 Directions for sampling cannot be made explicit enough to cover all cases. Extreme care and good judgment are necessary to ensure samples that represent the general character and average condition of the material. Clean hands are important. Clean gloves may be worn but only when absolutely necessary, such as in cold weather, or when handling materials at high temperature, or for reasons of safety. Select wiping cloths so that lint is not introduced, contaminating samples.

7.2 As many petroleum vapors are toxic and flammable, avoid breathing them or igniting them from an open flame or a spark

produced by static. Follow all safety precautions specific to the material being sampled.

7.3 When sampling relatively volatile products (more than 2 pounds (0.14 kgf/cm²) RVP), the sampling apparatus shall be filled and allowed to drain before drawing the sample. If the sample is to be transferred to another container, this container shall also be rinsed with some of the volatile product and then drained. When the actual sample is emptied into this container, the sampling apparatus should be upended into the opening of the sample container and remain in this position until the contents have been transferred so that no unsaturated air will be entrained in the transfer of the sample.

8. Handling samples.

8.1 *Volatile samples.* It is necessary to protect all volatile samples of gasoline from evaporation. Transfer the product from the sampling apparatus to the sample container immediately. Keep the container closed except when the material is being transferred. After delivery to the laboratory, volatile samples should be cooled before the container is opened.

8.2 *Container outage.* Never completely fill a sample container, but allow adequate room for expansion, taking into consideration the temperature of the liquid at the time of filling and the probable maximum temperature to which the filled container may be subjected.

9. Shipping samples.

9.1 To prevent loss of liquid and vapors during shipment, and to protect against moisture and dust, cover the stoppers of glass bottles with plastic caps that have been swelled in water, wiped dry, placed over the tops of the stoppered bottles, and allowed to shrink tightly in place. The caps of metal containers must be screwed down tightly and checked for leakage. Postal and express office regulations applying to the shipment of flammable liquids must be observed.

10. Labeling sample containers.

10.1 Label the container immediately after a sample is obtained. Use waterproof and oilproof ink, or a pencil hard enough to dent the tag, since soft pencil and ordinary ink markings are subject to obliteration from moisture, oil smearing and handling. An indelible identification symbol, such as a bar code, may be used in lieu of a manually addressed label. The label shall reference the following information:

10.1.1 Date and time (the period elapsed during continuous sampling);

10.1.2 Name of the sample;

10.1.3 Name or number and owner of the vessel, car, or container;

10.1.4—Brand and grade of material; and

10.1.5—Reference symbol or identification number.

11. Sampling procedures.

11.1 The standard sampling procedures described in this method are summarized in Table 1. Alternative sampling procedures may be used if a mutually satisfactory agreement has been reached by the party(ies) involved and EPA and such agreement has been put in writing and signed by authorized officials.

11.2 Bottle or beaker sampling. The bottle or beaker sampling procedure is applicable for sampling liquids of 16 pounds (1.12 kgf/cm²) RVP or less in tank cars, tank trucks, shore tanks, ship tanks, and barge tanks.

11.2.1 *Apparatus.* A suitable sampling bottle or beaker as shown in Figure 2 is required. Recommended diameter of opening in the bottle or beaker is ¾ inch (19 mm).

11.2.2 *Procedure.*

11.2.2.1 *All-levels sample.* Lower the weighted, stoppered bottle or beaker as near as possible to the draw-off level, pull out the stopper with a sharp jerk of the cord or chain and raise the bottle at a uniform rate so that it is 70–85% full as it emerges from the liquid.

11.2.2.2 *Running sample.* Lower the unstoppered bottle or beaker as near as possible to the level of the bottom of the outlet connection or swing line and then raise the bottle or beaker to the top of the gasoline at a uniform rate of speed such that it is 70–85% full when withdrawn from the gasoline.

11.2.2.3 *Upper, middle, and lower samples.* Lower the weighted, stoppered bottle to the proper depths (Figure 1) as follows:

Upper sample	middle of upper third of the tank contents
Middle sample	middle of the tank contents
Lower sample	level of the fixed tank outlet or the swing-line outlet

At the selected level pull out the stopper with a sharp jerk of the cord or chain and allow the bottle or beaker to fill completely, as evidenced by the cessation of air bubbles. When full, raise the bottle or beaker, pour off a small amount, and stopper immediately.

11.2.2.4 *Top sample.* Obtain this sample (Figure 1) in the same manner as specified in 11.2.2.3 but at six inches (150 mm) below the top surface of the tank contents.

11.2.2.5 *Handling.* Stopper and label bottle samples immediately after taking them, and deliver to the laboratory in the original sampling bottles.

11.3 *Tap sampling.* The tap sampling procedure is applicable for sampling liquids of twenty-six pounds (1.83 kgf/cm²) RVP or less in tanks which are equipped with suitable

sampling taps or lines. This procedure is recommended for volatile stocks in tanks of the breather and balloon roof type, spheroids, etc. (Samples may be taken from the drain cocks of gage glasses, if the tank is not equipped with sampling taps.) The assembly for tap sampling is shown in Figure 3.

11.3.1 *Apparatus.*

11.3.1.1 *Tank taps.* The tank should be equipped with at least three sampling taps placed equidistant throughout the tank height and extending at least three feet (0.9 meter) inside the tank shell. A standard ¼ inch pipe with suitable valve is satisfactory.

11.3.1.2 *Tube.* A delivery tube that will not contaminate the product being sampled and long enough to reach to the bottom of the sample container is required to allow submerged filling.

11.3.1.3 *Sample containers.* Use clean, dry glass bottles of convenient size and strength or metal containers to receive the samples.

11.3.2 *Procedure.* Before a sample is drawn, flush the tap (or gage glass drain cock) and line until they are purged completely. Connect the clean delivery tube to the tap. Draw upper, middle, or lower samples directly from the respective taps after the flushing operation. Stopper and label the sample container immediately after filling, and deliver it to the laboratory.

11.4 *Continuous sampling.* The continuous sampling procedure is applicable for sampling liquids of 16 pounds (1.12 kgf/cm^2) RVP or less and semiliquids in pipelines, filling lines, and transfer lines. The continuous sampling may be done manually or by using automatic devices.

11.4.1 *Apparatus.*

11.4.1.1 *Sampling probe.* The function of the sampling probe is to withdraw from the flow stream a portion that will be representative of the entire stream. The apparatus assembly for continuous sampling is shown in Figure 4. Probe designs that are commonly used are as follows:

11.4.1.1.1 A tube extending to the center of the line and beveled at a 45 degree angle facing upstream (Figure 4(a)).

11.4.1.1.2 A long-radius forged elbow or pipe bend extending to the center line of the pipe and facing upstream. The end of the probe should be reamed to give a sharp entrance edge (Figure 4(b)).

11.4.1.1.3 A closed-end tube with a round orifice spaced near the closed end which should be positioned in such a way that the orifice is in the center of the pipeline and is facing the stream as shown in Figure 4(c)).

11.4.1.2 *Probe location.* Since the fluid to be sampled may not in all cases be homogeneous, the location, the position and the size of the sampling probe should be such as to minimize stratification or dropping out of heavier particles within the tube or the displacement of the product within the tube as a result of variation in gravity of the flowing stream. The sampling probe should be located preferably in a vertical run of pipe and as near as practicable to the point where the product passes to the receiver. The probe should always be in a horizontal position.

11.4.1.2.1 The sampling lines should be as short as practicable and should be cleared before any samples are taken.

11.4.1.2.2 Where adequate flowing velocity is not available, a suitable device for mixing the fluid flow to ensure a homogeneous mixture at all rates of flow and to eliminate stratification should be installed upstream of the sampling tap. Some effective devices for obtaining a homogeneous mixture are as follows: Reduction in pipe size; a series of baffles; orifice or perforated plate; and a combination of any of these methods.

11.4.1.2.3 The design or sizing of these devices is optional with the user, as long as the flow past the sampling point is homogeneous and stratification is eliminated.

11.4.1.3 To control the rate at which the sample is withdrawn, the probe or probes should be fitted with valves or plug cocks.

11.4.1.4 Automatic sampling devices that meet the standards set out in 11.4.1.5 may be used in obtaining samples of gasoline. The quality of sample collected must be of sufficient size for analysis, and its composition should be identical with the composition of the batch flowing in the line while the sample is being taken. An automatic sampler installation necessarily includes not only the automatic sampling device that extracts the samples from the line, but also a suitable probe, connecting lines, auxiliary equipment, and a container in which the sample is collected. Automatic samplers may be classified as follows:

11.4.1.4.1 Continuous sampler, time cycle (nonproportional) type. A sampler designed and operated in such a manner that it transfers equal increments of liquid from the pipeline to the sample container at a uniform rate of one or more increments per minute is a continuous sampler.

11.4.1.4.2 Continuous sampler, flow-responsive (proportional) type. A sampler that is designed and operated in such a manner that it will automatically adjust the quantity of sample in proportion to the rate of flow is a flow-responsive (proportional) sampler. Adjustment of the quantity of sample may be made either by varying the frequency of transferring equal increments of sample to the sample container, or by varying the volume of the increments while maintaining a constant frequency of transferring the increments to the sample container. The apparatus assembly for continuous sampling is shown in Figure 4.

11.4.1.4.3 *Intermittent sampler.* A sampler that is designed and operated in such a manner that it transfers equal increments of liquid from a pipeline to the sample container

at a uniform rate of less than one increment per minute is an intermittent sampler.

11.4.1.5 *Standards of installation.* Automatic sampler installations should meet all safety requirements in the plant or area where used, and should comply with American National Standard Code for Pressure Piping, and other applicable codes (ANSI B31.1). The sampler should be so installed as to provide ample access space for inspection and maintenance.

11.4.1.5.1 Small lines connecting various elements of the installation should be so arranged that complete purging of the automatic sampler and of all lines can be accomplished effectively. All fluid remaining in the sampler and the lines from the preceding sampling cycle should be purged immediately before the start of any given sampling operation.

11.4.1.5.2 In those cases where the sampler design is such that complete purging of the sampling lines and the sampler is not possible, a small pump should be installed in order to circulate a continuous stream from the sampling tube past or through the sampler and back into the line. The automatic sampler should then withdraw the sample from the sidestream through the shortest possible connection.

11.4.1.5.3 Under certain conditions, there may be a tendency for water and heavy particles to drop out in the discharge line from the sampling device and appear in the sample container during some subsequent sampling period. To circumvent this possibility, the discharge pipe from the sampling device should be free of pockets or enlarged pipe areas, and preferably should be pitched downward to the sample container.

11.4.1.5.4 To ensure clean, free-flowing lines, piping should be designed for periodic cleaning.

11.4.1.6 *Field calibration.* Composite samples obtained from the automatic sampler installation should be verified for quantity performance in a manner that meets with the approval of all parties concerned (including EPA), at least once a month and more often if conditions warrant. In the case of time-cycle samplers, deviations in quantity of the sample taken should not exceed ± five percent for any given setting. In the case of flow-responsive samplers, the deviation in quantity of sample taken per 1,000 barrels of flowing stream should not exceed ± five percent. For the purpose of field-calibrating an installation, the composite sample obtained from the automatic sampler under test should be verified for quality by comparing on the basis of physical and chemical properties, with either a properly secured continuous nonautomatic sample or tank sample. The tank sample should be taken under the following conditions:

11.4.1.6.1 The batch pumped during the test interval should be diverted into a clean tank and a sample taken within one hour after cessation of pumping.

11.4.1.6.2 If the sampling of the delivery tank is to be delayed beyond one hour, then the tank selected must be equipped with an adequate mixing means. For valid comparison, the sampling of the delivery tank must be completed within eight hours after cessation of pumping, even though the tank is equipped with a motor-driven mixer.

11.4.1.6.3 When making a normal full-tank delivery from a tank, a properly secured sample may be used to check the results of the sampler if the parties (including EPA) mutually agree to this procedure.

11.4.1.7 *Receiver.* The receiver must be a clean, dry container of convenient size to receive the sample. All connections from the sample probe to the sample container must be free of leaks. Two types of containers may be used, depending upon service requirements.

11.4.1.7.1 *Atmospheric container.* The atmospheric container shall be constructed in such a way that it retards evaporation loss and protects the sample from extraneous material such as rain, snow, dust, and trash. The construction should allow cleaning, interior inspection, and complete mixing of the sample prior to removal. The container should be provided with a suitable vent.

11.4.1.7.2 *Closed container.* The closed container shall be constructed in such a manner that it prevents evaporation loss. The construction must allow cleaning, interior inspection and complete mixing of the sample prior to removal. The container should be equipped with a pressure-relief valve.

11.4.2 *Procedure.*

11.4.2.1 *Nonautomatic sample.* Adjust the valve or plug cock from the sampling probe so that a steady stream is drawn from the probe. Whenever possible, the rate of sample withdrawal should be such that the velocity of liquid flowing through the probe is approximately equal to the average linear velocity of the stream flowing through the pipeline. Measure and record the rate of sample withdrawal as gallons per hour. Divert the sample stream to the sampling container continuously or intermittently to provide a quantity of sample that will be of sufficient size for analysis.

11.4.2.2 *Automatic sampling.* Purge the sampler and the sampling lines immediately before the start of a sampling operation. If the sample design is such that complete purging is not possible, circulate a continuous stream from the probe past or through the sampler and back into the line. Withdraw the sample from the side stream through the automatic sampler using the shortest possible connections. Adjust the sampler to deliver not less than one and not more than 40 gallons (151 liters) of sample during the desired sampling period. For time-cycle samplers, record the rate at

which sample increments were taken per minute. For flow-responsive samplers, record the proportion of sample to total stream. Label the samples and deliver them to the laboratory in the containers in which they were collected.

11.5 *Nozzle sampling.* The nozzle sampling procedure is applicable for sampling gasoline from a retail outlet or wholesale purchaser-consumer facility storage tank.

11.5.1 *Apparatus.* Sample containers conforming with section 4.1 should be used. A spacer, if appropriate (figure 6), and a nozzle extension device similar to that shown in figures 7, 7a, or 7b shall be used when nozzle sampling. The nozzle extension device does not need to be identical to that shown in figures 7, 7a, or 7b but it should be a device that will bottom fill the container with a minimum amount of vapor loss.

11.5.2 *Retail sampling procedure*

11.5.2.1 If a nozzle extension as found in figure 7 or 7a is used, 3 gallons of gasoline should first be dispensed from the pump nozzle to purge the pump hose and nozzle. Then a small amount of product should be dispensed through the nozzle extension into the sample container to rinse the sample container. A pump nozzle spacer (figure 6) may be used if the pump is a vapor recovery type. Rinse the sample container and discard the waste product into an appropriate container. Insert the nozzle extension (figure 7 or 7a) into the sample container and insert the pump nozzle into the extension with slot over the air bleed hole (when using figure 7). Fill the sample container slowly through the nozzle extension to 70–85 percent full (figure 8). Remove the nozzle extension. Cap the sample container at once. Check for leaks. Discard the sample container and re-sample if leak occurs. If the sample container is leak tight, label the container and deliver it to the laboratory.

11.5.2.2 If a nozzle extension as found in figure 7b is used, 3 gallons of gasoline should first be dispensed from the pump nozzle to purge the pump hose and nozzle. Then screw a dry and dirt free 4 oz sample bottle container onto the bottle filling fixture. Insert the nozzle into the nozzle extension. Insert the discharge end of the modified nozzle extension into a gasoline safety can or into the filler neck of a vehicle. Obtain the sample by pumping at least 0.2 gallon through the sampler. Remove the sample bottle from the fixture. The sample must be 70–85 percent full. Cap the sample container at once. Check for leaks. Discard the sample container and re-sample if a leak occurs. If the sample container is leak tight, label the container and deliver it to the laboratory.

12. Special Precautions and Instructions.

12.1 *Precautions.* Vapor pressures are extremely sensitive to evaporation losses and to slight changes in composition. When obtaining, storing, or handling samples, observe the necessary precautions to ensure samples representative of the product and satisfactory for RVP tests. Official samples should be taken by, or under the immediate supervision of, a person of judgment, skill, and sampling experience. Never prepare composite samples for this test. Make certain that containers which are to be shipped by common carrier conform to applicable Interstate Commerce Commission, state, and local regulations. When flushing or purging lines or containers, observe the pertinent regulations and precautions against fire, explosion, and other hazards.

12.2 *Sample containers.* For nozzle sampling, use containers of not less than 4 ounces (118 ml) nor more than two gallons (7.6 liters) capacity, of sufficient strength to withstand the pressure to which they may be subjected, and of a type that will permit replacement of the cap or stopper with suitable connections for the transfer of the sample to the gasoline chamber of the vapor pressure testing apparatus. For running or all-level sampling procedures, use containers of not less than one quart (0.9 liter) nor more than two gallons (7.6 liters) capacity. Open-type containers have a single opening which permits sampling by immersion. Closed-type containers have two openings, one in each end (or the equivalent thereof), fitted with valves suitable for sampling by purging.

12.3 *Transfer connections.* The transfer connection for the open-type container consists of an air tube and a liquid delivery tube assembled in a cap or stopper. The air tube extends to the bottom of the container. One end of the liquid delivery tube is flush with the inside face of the cap or stopper and the tube is long enough to reach the bottom of the gasoline chamber while the sample is being transferred to the chamber. The transfer connection for the closed-type container consists of a single tube with a connection suitable for attaching it to one of the openings of the sample container. The tube is long enough to reach the bottom of the gasoline chamber while the sample is being transferred.

12.4 *Sampling open tanks.* Use clean containers of the open type when sampling open tanks and tank cars. An all-levels or a running sample obtained by the bottle procedure described in 11.2 is recommended. When the question exists of stratification of the contents of the tank, it is recommended that either a running or all-levels sample be taken along with upper, middle, and lower spot sampling. Before taking the sample, flush the container by immersing it in the product to be sampled. Then obtain the sample immediately. The sample must be 70–85 percent full. Close the container promptly and confirm it is not leaking. Label the container and deliver it to the laboratory.

12.5. *Sampling closed tanks.* Containers of the closed type may be used to obtain samples from closed or pressure tanks. Obtain the sample using the purging procedure described in 12.6.

12.6 *Purging procedure.* Connect the inlet valve of the closed-type container to the tank sampling tap or valve. Throttle the outlet valve of the container so that the pressure in it will be approximately equal to that in the container being sampled. Allow a volume of product equal to at least twice that of the container to flow through the sampling system. Then close all valves, the outlet valve first, the inlet valve of the container second, and the tank sampling valve last, and disconnect the container immediately. Withdraw enough of the contents so that the sample container will be 70–80 percent full. If the vapor pressure of the product is not high enough to force liquid from the container, open both the upper and lower valves slightly to remove the excess. Promptly seal and label the container, and deliver it to the laboratory.

TABLE 1—SUMMARY OF GASOLINE SAMPLING PROCEDURES AND APPLICABILITY

Type of container	Procedure	Paragraph
Storage tanks, ship and barge tanks, tank cars, tank trucks.	Bottle sampling.	11.2
Storage tanks with taps	Tap sampling..	11.3
Pipes and lines	Continuous line sampling.	11.4
Retail outlet and whole-sale purchaser-consumer facility storage tanks.	Nozzle sampling.	11.5

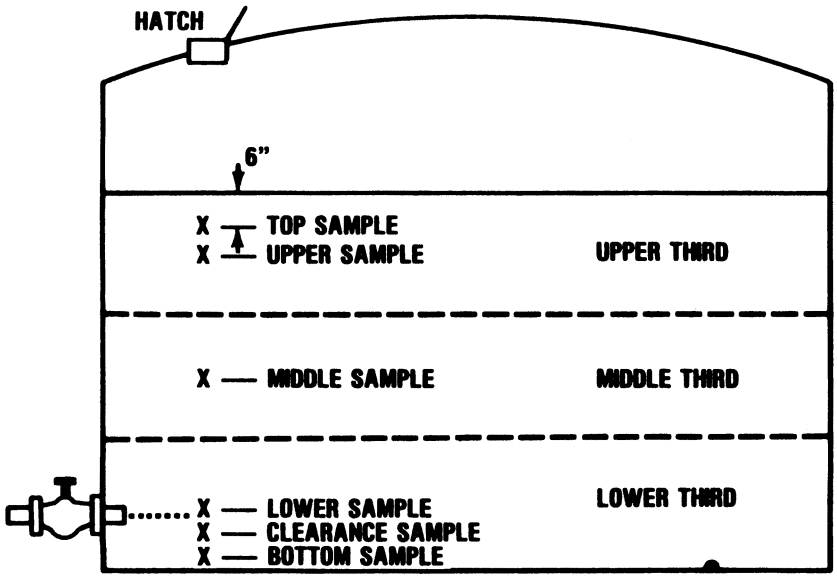

Figure 1. Sampling Depths

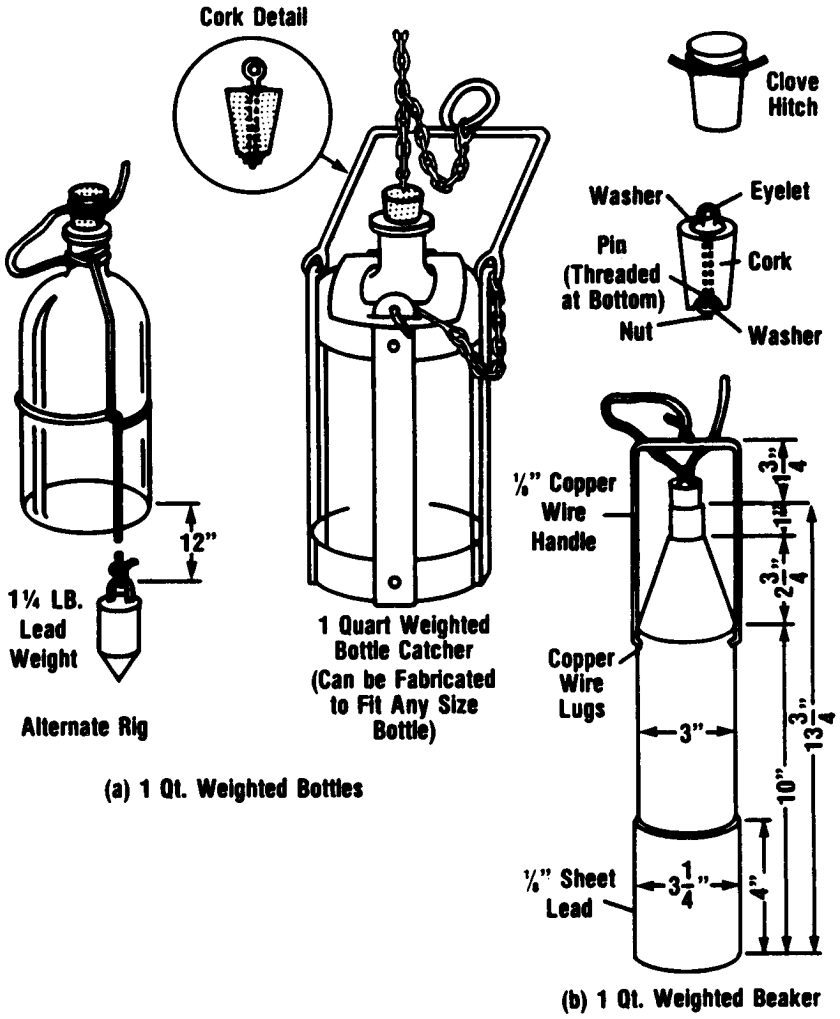

METRIC EQUIVALENTS

in.	⅛	1	1¾	2¾	3¼	4	10	12	13¾
mm	3	25	45	70	83	102	250	300	350

Figure 2. Assembly for Bottle Sampling

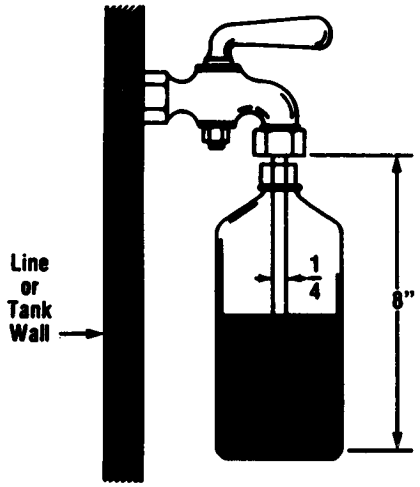

Figure 3. Assembly for Tap Sampling

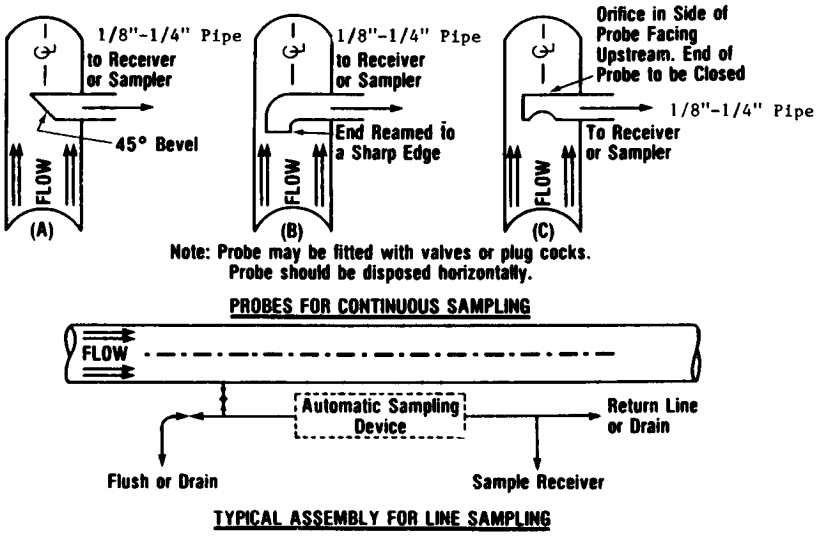

Figure 4. Probes for Continuous Sampling

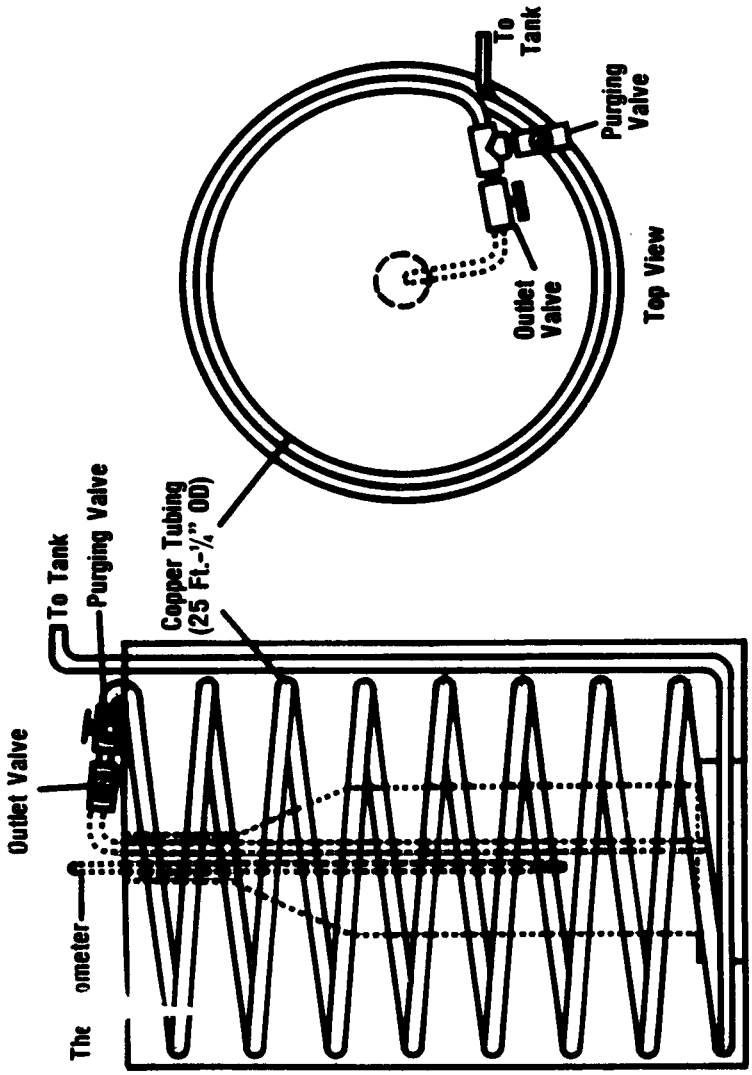

Figure 5. Cooling Bath for Reid Vapor Pressure Sampling

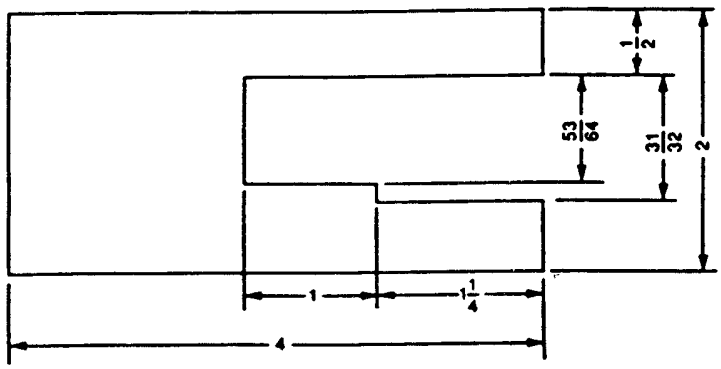

Make from 1/4 Inch flat stock (recommend non-ferrous material)
All dimensions in inches
Scale: 1inch = 1 inch
Break all edges and corners

Figure 6. Spacer for Nozzle Sampling

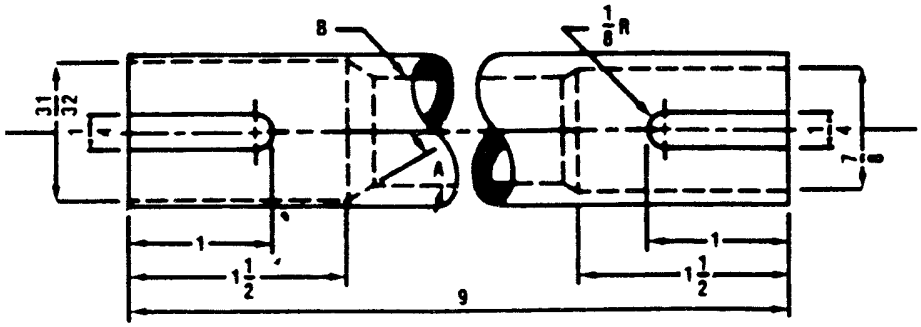

Use ¾ in. Schedule 80 Black Iron Pipe
All dimensions in inches
All tolerances ± 1/128

A—Recommend 30°
B—Inside Diameter Schedule 80 Black Iron Pipe

Figure 7. Nozzle Extension for Nozzle Sampling

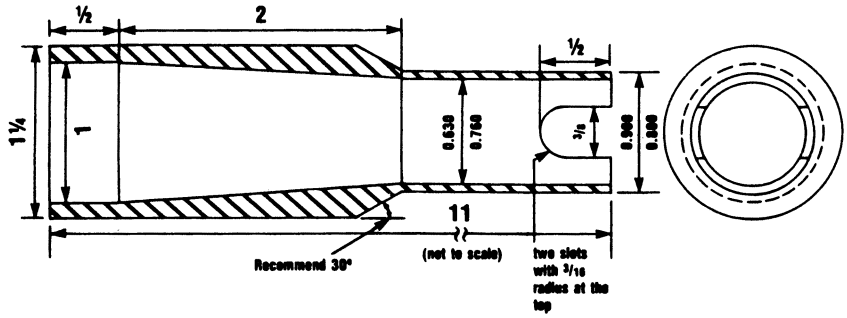

All Dimensions in inches (full scale except as noted)
All decimal dimensions represent minimum and maximum
Tolerance for all other dimensions is ± 1/32"
Made of non-ferrous material, uneffected by gasoline

Figure 7a. Nozzle Extension for Nozzle Sampling

(Compatible with narrow neck sample containers)

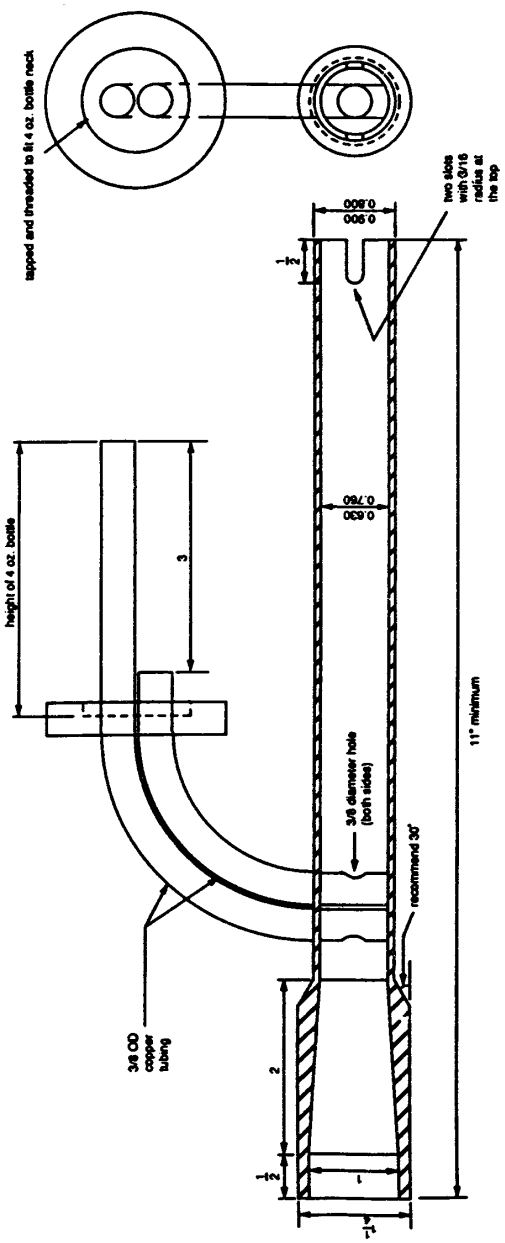

All dimensions in inches
All decimal dimensions represent minimum and maximum
Tolerance for all other dimensions is ± 1/32"
Made of non-ferrous material, uneffected by gasoline
Scale: 0.700 inch = 1 inch

Figure 7b. Nozzle Extension for Nozzle Sampling with 4 ounce bottle

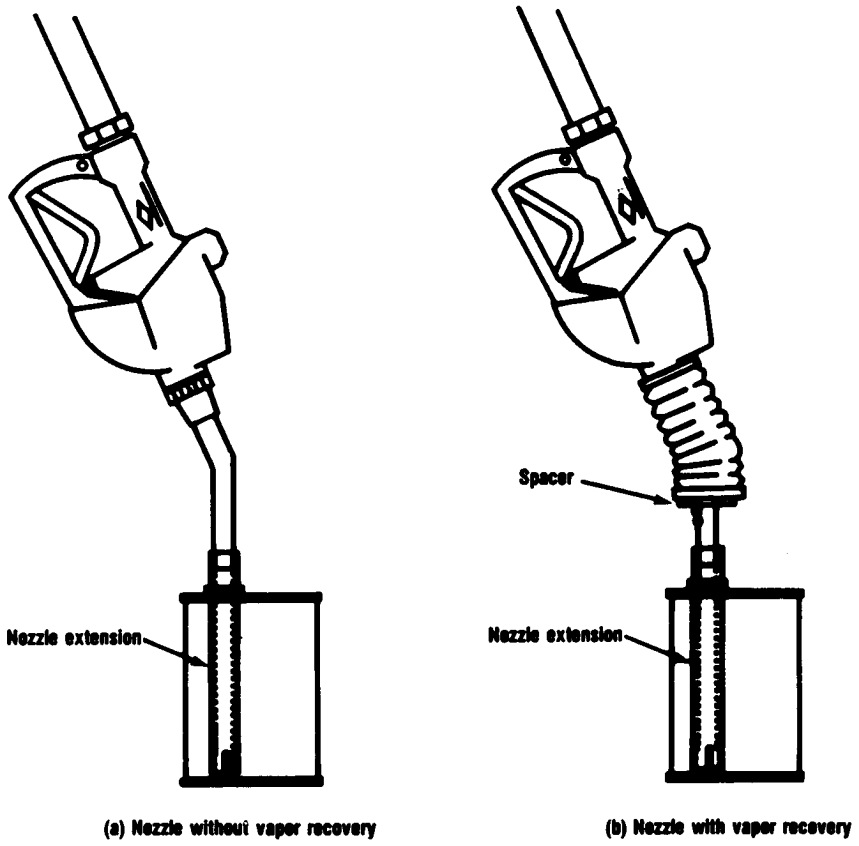

Figure 8. Assembly for Nozzle Sampling

[54 FR 11886, Mar. 22, 1989; 54 FR 27017, June 27, 1989, as amended at 55 FR 25835, June 25, 1990; 58 FR 14485, Mar. 17, 1993; 58 FR 19152, Apr. 12, 1993]

APPENDIX E TO PART 80—TEST FOR DETERMINING REID VAPOR PRESSURE (RVP) OF GASOLINE AND GASOLINE-OXYGENATE BLENDS

METHOD 3—EVACUATED CHAMBER METHOD

1. Scope.

1.1 This method covers the determination of the absolute pressure, measured against a vacuum of a gasoline or gasoline-oxygenate blend sample saturated with air at 32–40 °F (0–4.5 °C). The absolute (measured) pressure is observed with a system volume ratio of 1 part sample and 4 parts evacuated space at 100 °F (37.8 °C).

1.2 The values stated in pounds per square inch absolute are standard.

2. Summary of method.

2.1 A known volume of air-saturated fuel at 32–40 °F is introduced into an evacuated, thermostatically controlled test chamber, the internal volume of which is or becomes five times that of the total test specimen introduced into the test chamber. After the injection the test specimen is allowed to reach thermal equilibrium at the test temperature, 100 °F (37.8 °C). The resulting pressure increase is measured with an absolute pressure measuring device whose volume is included in the total of the test chamber volume. The measured pressure is the sum of the partial pressures of the sample and the dissolved air.

2.2 The total measured pressure is converted to Reid vapor pressure by use of a correlation equation (see Section 9).

3. Apparatus.

3.1 The apparatus shall employ a thermostatically controlled test chamber which is capable of maintaining a vapor-to-liquid ratio between 3.95 and 4.05 to 1.00.

3.2 The pressure measurement device shall have a minimum operation range from 0 to 15 psia (0 to 103 kPa) with a minimum resolution of 0.05 psia (0.34 kPa). The pressure measurement device shall include any necessary electronic and readout devices to display the resulting reading.

3.3 The test chamber shall be maintained at 100±0.2 °F (37.8±0.1 °C) for the duration of the test except for the time period after sample injection when the sample is coming to equilibrium with test temperature of 100±0.2 °F (37.8±0.1 °C).

3.4 A thermometer that meets the specification ASTM 18 F (18 C) or a platinum resistance thermometer shall be used for measuring the temperature of the test chamber. The minimum resolution for the temperature measurement device is 0.2 °F (0.1 °C) and an accuracy of ±0.2 °F (±0.1 °C).

3.5 The vapor pressure apparatus shall have a provision for the introduction of the test specimen into the evacuated or to be evacuated test chamber and for the cleaning or purging of the chamber following the test.

3.6 If a vacuum pump is used, it must be capable of reducing the pressure in the test chamber to less than 0.01 psia (0.07 kPa). If the apparatus uses a piston to induce a vacuum in the sample chamber the residual pressure shall be no greater than 0.01 psia (0.07 kPa) upon full expansion of the test chamber devoid of any material at 100±0.2 °F (37.8±0.1 °C).

3.7 Ice water or air bath for chilling the sample to a temperature between 32–40 °F (0–4.5 °C).

3.8 Mercury barometer, 0 to 17.4 psia (0 to 120 kPa) range.

3.9 McLeod vacuum gauge, to cover at least the range of 0 to 5 mm Hg (0 to 0.67 kPa). Calibration of the McLeod gauge is checked as in accordance with Annex A6 of ASTM test Method D 2892–84, (Standard test method for distillation of Crude Petroleum (15–Theoretical Plate Column)). ASTM D–2892–84 is incorporated by reference. This incorporation by reference was approved by the Director of the Federal Register in accordance with 5 U.S.C 552(a) and 1 CFR part 51. Copies may be obtained from the American Society for Testing and Materials, 1916 Race St., Philadelphia, PA 19103. Copies may be inspected at the U.S. Environmental Protection Agency, Air Docket Section, room M–1500, 401 M Street, SW., Washington, DC 20460 or at the Office of the Federal Register, 800 North Capitol Street, NW., Washington, DC.

4. Reagents and materials.

4.1 *Quality control standards.* Use chemicals of at least 99% purity for quality control standards. Unless otherwise indicated, it is intended that all reagents conform to the specifications of the committee on Analytical Reagents of the American Chemical Society where such specifications are available (see section 7.3). Specifications for analytical reagents may be obtained from the American Chemical Society, 1155 16th Street, NW., Washington, DC 20036.

4.1.1 2,2,4-trimethylpentane

4.1.2 2,2-dimethylbutane

4.1.3 3-methylpentane

4.1.4 n-pentane

4.1.5 acetone

4.2 n-pentane (commercial grade-95% pure)

5. Handling of samples.

5.1 The sensitivity of vapor pressure measurements to losses through evaporation and the resulting change in composition is such as to require the utmost precaution in the handling of samples. The provisions of this section apply to all samples for vapor pressure determinations.

5.2 Sample in accordance with 40 CFR part 80, appendix D.

5.3 Sample container size. The minimum size of the sample container from which the vapor pressure sample is taken is 4 ounces (118 ml). It will be 70 to 85% filled with sample.

5.4 *Precautions.*

5.4.1 Determine vapor pressure as the first test on a sample. Multiple analyses may be performed, but must be evaluated given the stated precision for the size of the sample container, and the order in which they were run in relation to the initial analysis.

5.4.2 Protect samples from excessive heat prior to testing.

5.4.3 Leaking samples should be replaced if possible. Analysis results from leaking sample containers must be marked as such.

5.4.4 Samples that have separated into two phases should be replaced if possible. Analysis results from samples that have phase separated must be marked as such.

5.4.5 Sample handling temperature. In all cases, cool the sample to a temperature of 32–40° F (0–4.5° C) before the container is opened. To ensure sufficient time to reach this temperature, directly measure the temperature of a similar liquid at a similar initial temperature in a like container placed in the cooling bath at the same time as the sample.

6. Preparation for test.

6.1 *Verification of sample container filling.* With the sample at a temperature of 32–40 °F (0–4.5 °C), take the container from the cooling bath, wipe dry with an absorbent material, unseal it, and examine its ullage. The sample content, as determined by use of a suitable gauge, should be equal to 70 to 85 volume % of the container capacity.

6.1.1 Analysis results from samples that contain less than 70 volume % of the container capacity must be marked as such.

6.1.2 If the container is more than 85 volume % full, pour out enough sample to bring the container contents within the 70 to 85 volume % range. Under no circumstance may any sample poured out be returned to the container.

6.2 Air saturation of the sample in the sample container. With the sample at a temperature of 32–40 °F (0–4.5 °C), take the container from the cooling bath, wipe dry with an absorbent material, unseal it momentarily, taking care to prevent water entry, reseal it, and shake it vigorously. Return it to the bath for a minimum of 2 minutes. Repeat the air introduction procedure twice, for a total of three air introductions to completely saturate the sample.

6.3 Prepare the instrument for operation in accordance with the manufacturer's instructions.

6.3.1 *Instruments with vacuum pumps.* Clean and dry the test chamber as required to obtain a sealed test chamber pressure of less than 0.01 psi (0.07 kPa) for 1 minute. If the pressure exceeds this value check for and resolve in the following order; residual sample or cleaning solvent, sample chamber leaks, and transducer calibration.

6.3.2 *Instruments without vacuum pumps.* The sample purges the sample chamber through a series of rinses before the analysis occurs. Errors due to leaks in the plunger, piston seals, or carryover from previous samples or standards may give erratic results (see Note of section 6.3.2). The operator must run a quality control standard for at least one in twenty analyses or once a day to determine if there is carryover from previous analyses or if leaks are occurring.

NOTE: When using a self cleaning apparatus some residual product may be carried over into subsequent analyses. Carryover effect should be investigated when conducting sequential analyses of dissimilar materials, especially calibration standards. Inaccuracies caused by carryover effect should be resolved using testing procedures designed to minimize such interferences.

6.4 If a syringe is used for the physical introduction of the sample specimen, it must be either clean and dry before it is used or it may be rinsed out at least three times with the sample. When cleaning the syringe, the rinse may not be returned to the sample container. The syringe must be capable of obtaining, upon filling with the sample charge, a quantity of sample that has an entrained gas volume of less than 3% of the necessary sample volume.

7. Calibration.

7.1 *Pressure measurement device.*

7.1.1 Check the calibration of the pressure measurement device daily or until the stability of the device is documented as having less than or equal to 0.03 psi (0.2 kPa) drift per unit of the appropriate calibration period. When calibration is necessary, follow the procedures in sections 7.1.2 through 7.1.4.

7.1.2 Connect a properly calibrated McLeod gauge to the vacuum source line to the test chamber. Apply vacuum to the test chamber. When the McLeod gauge registers a pressure less than 0.8 mm Hg (0.1 kPa) adjust the pressure measurement device's zero control to match to within ±0.01 psi (0.07 kPa) of the McLeod Gauge.

7.1.3 Open the test chamber to the atmosphere and observe the pressure measurement device's reading. Adjust the pressure measurement devices span control to within ±0.01 psi (0.07 kPa) of a temperature and latitude adjusted mercury barometer.

7.1.4 Repeat steps 7.1.2 and 7.1.3 until the instrument zero and barometer readings read correctly without further adjustments.

7.2 *Thermometer.* Check the calibration of the ASTM 18 F (18 C) thermometer or the

platinum resistance thermometer used to monitor the test chamber at least every six months in accordance ASTM E1–86, (Standard Specification for ASTM Thermometers). ASTM E1–86 is incorporated by reference. This incorporation by reference was approved by the Director of the Federal Register in accordance with 5 U.S.C. 552(a) and 1 CFR part 51. Copies may be obtained from the American Society for Testing and Materials, 1916 Race St., Philadelphia, PA 19103. Copies may be inspected at the U.S. Environmental Protection Agency, Air Docket Section, room M–1500, 401 M Street, SW., Washington, DC 20460 or at the Office of the Federal Register, 800 North Capitol Street, NW., Washington, DC. Check the reading of the thermometer against a National Institute of Standards and Technology traceable thermometer.

7.3 *Quality assurance.* The instrument's performance must be checked at least once per day using a quality control standard listed in section 4.1. In the case of the non-vacuum pump instruments the frequency is stated in section 6.3.2. The standards must be chilled to the same temperature, have the same ullage, and saturated with air in the same manner as the samples. Record total measured pressure and compare against the following reference values:

Compound	Lower control limit	Upper control limit
2,2,4-trimethylpentane	2.39 psia (16.5 kpa)	3.03 psi (20.9 kpa)
3-methylpentane	6.86 psia (47.3 kpa)	7.26 psi (50.1 kpa)
acetone	7.97 psia (55.0 kpa)	8.12 psi (56.0 kpa)
2,2-dimethylbutane	10.64 psia (73.4 kpa)	10.93 psi (75.4 kpa)
n-pentane	16.20 psia (111.7 kpa)	16.40 psi (113.1 kpa)

If the observed pressure does not fall between the reference values, check the instrument for leaks and its calibration (Section 7).

7.3.1 Other compounds, gasolines, and gasoline blends may be used as control standards as long as these materials have been statistically evaluated for their mean total measured pressure using an instrument that conforms to this procedure.

7.3.2 The control limits can be calculated with the following formula:

MEAN MEASURED PRESSURE

$$\bar{x} = \frac{\sum x_i}{n}$$

Standard Deviation

$$s_{x_i} = \frac{\sum x_i^2 - (\sum x_i)^2/n}{(n-1)]^{0.5}}$$

Upper Control Limit (UCL)

$$UCL = \bar{X} + (t_{n-1,0.975}) * (S_x)$$

Lower Control Limit (LCL)

$$LCL = \bar{X} - (t_{n-1,0.975}) * (S_x)$$

where: x_i is the individual analyses of the control standard, n is the number of analyses (for a new instrument or a new control standard this should be at least ten analyses); $(t_{n-1,0.975})$ is the two-tailed student t statistic for n-1 degrees of freedom for 95% of the expected data from the analysis of the standard.

8. Procedure.

8.1 Remove the sample from the cooling bath or refrigerator, dry the exterior of the container with absorbent material, unseal, and insert the transfer tube, syringe, or transfer connection (see section 6). Draw an aliquot (minimize gas bubbles) of sample into a gas tight syringe or transfer the sample using tubing or transfer connection and deliver this test specimen to the test chamber as rapidly as possible. The total time between opening the chilled sample container and inserting/securing the syringe or transfer connection into the sealed test chamber shall not exceed one minute.

8.2 Follow the manufacturer's instructions for injection of the test specimen into the test chamber, and for the operation of the instrument to obtain a total measured vapor pressure result for the test specimen.

8.3 Set the instrument to read the test results in terms of total measured pressure. If the instrument is capable of calculating a Reid Vapor Pressure equivalent value ensure that only the parameters in section 9.2 are used.

9. Calculation and record of result.

9. Calculation and record of result.

9.1 Note the total measured vapor pressure reading for the instrument to the nearest 0.01 psi (0.07 kPa). For instruments which do not automatically display a stable pressure value, manually note the pressure indicator reading every minute to the nearest 0.01 psi (0.07 kPa). When three successive readings agree to within 0.01 psia (0.07 kPa) note the final result to the nearest 0.01 psia (0.07 kPa).

9.2 Using the following correlation equation, calculate the Reid Vapor Pressure (RVP) that is equivalent to the total measured vapor pressure obtained from the instrument, in order to compare the vapor pressure standards set out in 40 CFR 80.27. Ensure that the instrument reading in this equation corresponds to the total measured pressure and has not been corrected by an automatically programmed correction factor.

$$RVP\ psi=(0.956 * X)-0.347$$

$$RVP\ kPa=(0.956 * X)-2.39$$

where: X=total measured vapor pressure in psi or kPa

9.3 Record the RVP to the nearest 0.01 psi (0.07 kPa) as the official test result.

9.4 EPA will use the above method as the official vapor pressure test method. EPA will recognize correlations from regulated parties if the correlations are established directly with EPA's test laboratory. Any test method may be used for defense as long as adequate correlation is demonstrated to this method (i.e., any vapor pressure defense test method could be used if adequate correlation exists directly to this method, which can then be converted to Reid Vapor Pressure by use of the EPA Grabner correlation equation in section 9.2 of this method).

[58 FR 14488, Mar. 17, 1993]

APPENDIX F TO PART 80—TEST FOR DETERMINING THE QUANTITY OF ALCOHOL IN GASOLINE

METHOD 1—WATER EXTRACTION METHOD

1. *Scope.*

This test method covers the determination of the type and amount of alcohols in gasoline.

2. *Summary of method.*

Gasoline samples are extracted with water prior to analysis on a gas chromatograph (GC). The extraction eliminates hydrocarbon interference during chromatography. A known quantity of isopropanol is added to the fuel prior to extraction to act as an internal standard.

3. *Sample description.*

3.1 Sample in accordance with 40 CFR part 80, appendix D.

3.2 At least 100 ml. of gasoline suspected of containing ethanol and/or methanol are required.

4. *Apparatus.*

4.1 Gas chromatograph—A gas chromatograph equipped with a flame ionization detector.

4.2 Column—A gas chromatograph column, glass, 1800 by 6.35 cm. outside diameter, packed with chromosorb 102.

4.3 Recorder—A 1-mv recorder with a 1 second full scale response and a chart speed of 10 mm. per minute (0.4 inches per minute).

4.4 Syringe (100 ul.) for adding the internal standard.

4.5 Pipet.

4.6 Injection syringe (10 ul.).

4.7 Extraction syringe (1–5 ml.) with 3-inch needle.

4.8 250 ml. (½ pint) glass sample bottles with screw caps or equivalent.

4.9 Calibration standard solutions extracted from gasoline containing known quantities of alcohols.

4.10 Reference standard solutions extracted from gasoline containing known quantities of alcohols.

4.11 Distilled water.

4.12 Reagent grade isopropanol.

4.13 Rubber gloves.

4.14 I.D. tags.

5. *Precautions.*

NOTE 1: Gasoline and alcohols are extremely flammable and may be toxic over prolonged exposure. Methanol is particularly hazardous. Persons performing this procedure must be familiar with the chemicals involved and all precautions applicable to each.

5.1 Extractions and dilutions must be performed in well-ventilated areas, preferably under a fume hood, away from open flames and sparks.

5.2 Rubber gloves must be worn during the handling of gasoline and alcohols.

5.3 Avoid breathing fumes from gasoline and alcohols, particularly methanol.

5.4 Gas cylinders must be properly secured and the hydrogen FID fuel must be segregated from the compressed air (oxidizer) tank.

6. *Visual inspection.*

6.1 Ensure that the samples do not certain sediment or separated phases prior to extraction.

6.2 Ensure adequate quantities of GC supply gases to maintain a run.

7. *Test article preparation.*

7.1 Gas chromatography—Use carrier gas, flow rates, detector and injection temperatures and column as specified in the GC manufacturer's specifications.

7.2 Sample extraction, preparation and analysis.

7.2.1 Label two 6 ml. vials with the sample identification number supplied with the

original sample. The estimated percent alcohol from any screening tests must also be included on the label.

7.2.2 Pipet 4 ml.±0.01 ml. of sample into one of the vials. Label as vial #1.

7.2.3 Measure 100 ul. (0.1 ml.)±0.5 ul. of isopropanol into vial #1.

NOTE: This adds an internal standard to the sample which is required for accurate analysis.

7.2.4 Add 1 ml.±0.2 ml. of distilled water to the gasoline sample in vial #1 and shake for 10 seconds.

7.2.5 Allow the mixture to separate into two phases (at least 5 minutes).

7.2.6 Carefully draw off the aqueous (lower) phase using a 5 ml. syringe and long needle.

NOTE: Be careful not to allow any of the gasoline phase to get into the needle. Leave a small amount (approximately 0.2 ml.) of the aqueous phase in the vial.

7.2.7 Transfer the aqueous phase into the other 6 ml. vial (vial #2).

7.2.8 Repeat steps 7.2.4 to 7.2.6 two more times.

7.2.9 Fill vial #2 (the aqueous phase) to 4 ml.±0.05 ml. with distilled water.

7.2.10 Retain the remaining original gasoline sample (not the gasoline phase).

7.2.11 Discard the extracted gasoline phase in vial #1 in an appropriate manner.

7.2.12 Perform a second extraction on one sample in every 20. This sample is to be labeled with the sample number and as a duplicate and run as a normal sample.

7.2.13 Transfer approximately 2 ml. of the aqueous solution to vials compatible with the autosampler. Tag the vial with the sample number.

7.2.14 Perform analysis of the sample according to the GC manufacturer's specifications.

7.3 Standards.

7.3.1 Calibration standard solutions (made in gasoline).

7.3.1.1 Reagent grade or better alcohols (including undenatured ethanol) are to be diluted with regular unleaded gasoline. The isopropanol internal standard is to be added during extraction of the alcohols. Newly acquired stocks of reagent grade alcohols shall be diluted to 10% with hydrocarbon-free water and analyzed for contamination by GC before use.

7.3.1.2 Required calibration standards (% by volume in gasoline):

Alcohol	Range (percent)	Standard (MIN)
Methanol	0.5–12	5
Ethanol	0.5–11	5

The standards should be as equally spaced within the range as possible and may contain more than one alcohol.

NOTE: Level #1 must contain all of the alcohols.

8. *Quality control provisions.*

8.1 Alcohol(s) in water solution may be used to characterize the GC. The resulting characterization always reflects the absolute sensitivity of the instrument to each alcohol.

8.2 Calibration standards are made by extraction of known alcohol(s) in gasoline blends. These standards account for inaccuracies caused by incomplete extraction of alcohols.

8.3 The addition of isopropanol as an internal standard reduces errors caused by variations in injection volumes, and further reduces inaccuracies caused by incomplete extraction of alcohols.

8.4 Sufficient sample should be retained to permit reanalysis.

8.5 Running averages of reference standards data must not exceed 0.75% of applicable limits or investigation should be started for the cause of such variation.

9. *Calculations.*

9.1 Calculate purity of component as follows:

$$P_i = \frac{A_i}{\Sigma_A} \text{ expressed as a decimal fraction, that is 0.999}$$

where:

P_i=purity of component i,
A_i=area of response of component i, and
$\Sigma \mathbf{A}$=total area response of all components.

9.2 Calculate response factors as follows:

$$F_i = \frac{A_{is} \times W_i \times P_i}{A_i \times W_{is} \times P_{is}}$$

where:

F_i=response factor for component of interest i,
A_i=area response for component of interest i,
A_{is}=area response of internal standard,
W_i=weight of component of interest i (be sure to consider all sources),
W_{is}=weight of internal standard,
P_i=purity of component of interest i as determined in 9.1 expressed as a decimal, and
P_{is}=purity of internal standards as determined in 9.1 expressed as a decimal.

9.3 Calculate the percent alcohols as follows:

$$C_i = \frac{W_{is} \times A_i \times F_i}{W_i \times A_{is}} \times 100 = \text{weight \% component i}$$

where:

A_i=peak area component i,
A_{is}=peak area of internal standard,
W_i=weight of sample,
W_{is}=weight of internal standard, and
F_i=response factor for component i.

10. *Report.*

10.1 Report results to the nearest 0.1%.

11. *Precision and accuracy.*

11.1 Precision—The precision of this test method has not been determined.

11.2 Accuracy—The accuracy of this test method has not been determined.

METHOD 2—TEST METHOD FOR DETERMINATION OF C_1 TO C_4 ALCOHOLS AND MTBE IN GASOLINE BY GAS CHROMATOGRAPHY

1. *Scope.*

1.1 This test method covers a procedure for determination of methanol, ethanol, isopropanol, n-propanol, isobutanol, sec-butanol, tert-butanol, n-butanol, and methyl tertiary butyl ether (MTBE) in gasoline by gas chromatography.

1.2 Individual alcohols and MTBE are determined from 0.1 to 10 volume %. Any sample found to contain greater than 10 volume % of an alcohol or MTBE shall be diluted to concentrations within these limits.

1.3 Sl (metric) units of measurement are preferred and used throughout this standard. Alternative units, in common usage, are also provided to improve the clarity and aid the user of this test method.

1.4 This standard may involve hazardous materials, operations, and equipment. This standard does not purport to address all of the safety problems associated with its use. It is the responsibility of the user of this standard to establish appropriate safety and health practices and determine the applicability of regulatory limitations prior to use.

2. *Referenced documents.*

2.1 ASTM Standards:

D 4307 Practice for Preparation of Liquid Blends for Use as Analytical Standards[1]
D 4626 Practice for Calculation of Gas Chromatographic Response Factors[1]
E 260 Practice for Packed Column Gas Chromatographic Procedures[2]
E 355 Practice for Gas Chromatography Terms and Relationships[2]

2.2 EPA Regulations:

[1] Annual Book of ASTM Standards, Vol. 05.03.

[2] Annual Book of ASTM Standards, Vol. 14.01.

3. *Descriptions of terms specific to this standard.*

3.1 MTBE—methyl tertiary butyl ether.

3.2 Low volume connector—a special union for connecting two lengths of tubing 1.6 mm inside diameter and smaller. Sometimes this is referred to as a zero dead volume union.

3.3 Oxygenates—used to designate fuel blending components containing oxygen, either in the form of alcohol or ether.

3.4 Split ratio—a term used in gas chromatography using capillary columns. The split ratio is the ratio of the total flow of the carrier gas to the sample inlet versus the flow of carrier gas to the capillary column. Typical values range from 10:1 to 500:1 depending upon the amount of sample injected and the type of capillary column used.

3.5 WCOT—abbreviation for a type of capillary column used in gas chromatography that is wall-coated open tubular. This type of column is prepared by coating the inside of the capillary with a thin film of stationary phase.

3.6 TCEP—1,2,3,-tris-2-cyanoethoxypropane—a gas chromatographic liquid phase.

4. *Summary of test method.*

4.1 An internal standard, tertiary amyl alcohol, is added to the sample which is then introduced into a gas chromatograph equipped with two columns and a column switching valve. The sample first passes onto a polar TCEP column which elutes lighter hydrocarbons to vent and retains the oxygenated and heavier hydrocarbons. After methylcyclopentane, but before MTBE elutes from the polar column, the valve is switched to backflush the oxygenates onto a WCOT non-polar column. The alcohols and MTBE elute from the non-polar column in boiling point order, before elution of any major hydrocarbon constituents. After benzene elutes from the non-polar column, the column switching valve is switched back to its original position to backflush the heavy hydrocarbons. The eluted components are detected by a flame ionization or thermal conductivity detector. The detector response, proportional to the component concentration, is recorded; the peak areas are measured; and the concentration of each component is calculated with reference to the internal standard.

5. *Significance and use.*

5.1 Alcohols and other oxygenates may be added to gasoline to increase the octane number. Type and concentration of various

oxygenates are specified and regulated to ensure acceptable commercial gasoline quality. Drivability, vapor pressure, phase separation, and evaporative emissions are some of the concerns associated with oxygenated fuels.

5.2 This test method is applicable to both quality control in the production of gasoline and for the determination of deliberate or extraneous oxygenate additions or contamination.

6. *Apparatus.*

6.1 Chromatograph:

6.1.1 A gas chromatographic instrument which can be operated at the conditions given in Table 1, and having a column switching and backflushing system equivalent to Fig. 1. Carrier gas flow controllers shall be capable of precise control where the required flow rates are low (Table 1). Pressure control devices and gages shall be capable of precise control for the typical pressures required.

TABLE 1—CHROMATOGRAPHIC OPERATING CONDITIONS

Temperatures		Flows, mL/min		Other parameters: Carrier gas, helium	
Column oven, °C	60	To injector	75	Sample size, μL	3
Injector, °C	200	Column	5	Split ratio	15:1
Detector—TCD, °C	200	Auxiliary	3	Backflush, min	0.2–0.3
FID, °C	250	Makeup	18	Valve reset time, min	8–10
Valve, °C	60			Total analysis time, min	18–20

6.1.2 Detector—A thermal conductivity detector or flame ionization detector may be used. The system shall have sufficient sensitivity and stability to obtain a recorded deflection of at least 2 mm at a signal-to-noise ratio of at least 5 to 1 for 0.005 volume % concentration of an oxygenate.

6.1.3 Switching and backflushing valve—A valve, to be located within the gas chromatographic column oven, capable of performing the functions described in Section 11. and illustrated in Fig. 1. The valve shall be of low volume design and not contribute significantly to chromatographic deterioration.

6.1.3.1 Valco Model No. CM–VSV–10–HT, 1.6-mm (1/16-in.) fittings. This particular valve was used in the majority of the analyses used for the development of Section 15.

6.1.3.2 Valco Model No. C10W, 0.8-mm (1/32-in.) fittings. This valve is recommended for use with columns of 0.32-mm inside diameter and smaller.

6.1.4 Although not mandatory, an automatic valve switching device is strongly recommended to ensure repeatable switching times. Such a device should be synchronized with injection and data collection times. If no such device is available, a stopwatch, started at the time of injection, should be used to indicate the proper valve switching time.

6.1.5 Injection system—The chromatograph should be equipped with a splitting-type inlet device. Split injection is necessary to maintain the actual chromatographed sample size within the limits of column and detector optimum efficiency and linearity.

6.1.6 Sample introduction—Any system capable of introducing a representative sample into the split inlet device. Microlitre syringes, automatic syringe injectors, and liquid sampling valves have been used successfully.

6.2 Data presentation or calculation, or both:

6.2.1 Recorder—A recording potentiometer or equivalent with a full-scale deflection of 5 mV or less. Full-scale response time should be l s or less with sufficient sensitivity and stability to meet the requirements of 6.1.2.

6.2.2 Integrator or computer—Devices capable of meeting the requirements of 6.1.2, and providing graphic and digital presentation of the chromatographic data, are recommended for use. Means shall be provided for determining the detector response. Peak heights or areas can be measured by computer, electronic integration or manual techniques.

6.3 Columns, two as follows:

6.3.1 Polar column—This column performs a preseparation of the oxygenates from volatile hydrocarbons in the same boiling point range. The oxygenates and remaining hydrocarbons are backflushed onto the non-polar column in section 6.3.2. Any column with equivalent or better chromatographic efficiency and selectivity to that described in 6.3.1.1 can be used. The column shall perform at the same temperature as required for the column in 6.3.2.

6.3.1.1 TCEP micro-packed column, 560 mm (22 in.) by 1.6-mm (1/16-in.) outside diameter by 0.38-mm (0.015-in.) inside diameter stainless steel tube packed with 0.14 to 0.15g of 20% (mass/mass) TCEP on 80/100 mesh Chromosorb P(AW). This column was used in the (ASTM) cooperative study to provide the Precision and Bias data referred to in Section 15.

6.3.2 Non-polar (analytical) column—Any column with equivalent or better chromatographic efficiency and selectivity to that described in 6.3.2.1 and illustrated in Fig. 2 can be used.

6.3.2.1 WCOT methyl silicone column, 30m (1181 in.) long by 0.53 mm (0.021-in.) inside diameter fused silica WCOT column with a 2.6-µm film thickness of cross-linked methyl siloxane. This column was used in the (ASTM) cooperative study to provide the Precision and Bias data referred to in Section 15.

7. *Reagents and materials.*

7.1 Carrier gas—Carrier gas appropriate to the type of detector used. Helium has been used successfully. The minimum purity of the carrier gas used must be 99.95 mol %.

7.2 Standards for calibration and identification—Standards of all components to be analyzed and the internal standard are required for establishing identification by retention as well as calibration for quantitative measurements. These materials shall be of known purity and free of the other components to be analyzed.

NOTE 1. Warning—These materials are flammable and may be harmful or fatal if ingested or inhaled.

7.3 Preparation of calibration blends—For best results, these components must be added to a stock gasoline or petroleum naphtha, free of oxygenates (Warning—See Note 2). Refer to Test Method D 4307 for preparation of liquid blends. The preparation of several different blends, at different concentration levels covering the scope of the method, is recommended. These will be used to establish the linearity of the component response.

NOTE 2. Warning—Extremely flammable. Vapors harmful if inhaled.

7.4 Methylene chloride—Used for column preparation. Reagent grade, free of non-volatile residue.

NOTE 3. Warning—Harmful if inhaled. High concentrations may cause unconsciousness or death.

8. *Preparation of column packings.*

8.1 TCEP column packing:

8.1.1 Any satisfactory method, used in the practice of the art that will produce a column capable of retaining the C_1 to C_4 alcohols and MTBE from components of the same boiling point range in a gasoline sample. The following procedure has been used successfully.

8.1.2 Completely dissolve 10 g of TCEP in 100 mL of methylene chloride. Next add 40 g of 80/100 mesh Chromosorb P(AW) to the TCEP solution. Quickly transfer this mixture to a drying dish, in a fume hood, without scraping any of the residual packing from the sides of the container. Constantly, but gently, stir the packing until all of the solvent has evaporated. This column packing can be used immediately to prepare the TCEP column.

9. *Preparation of micro-packed TCEP column.*

9.1 Wash a straight 560 mm length of 1.6–mm outside diameter (0.38–mm inside diameter) stainless steel tubing with methanol and dry with compressed nitrogen.

9.2 Insert 6 to 12 strands of silvered wire, a small mesh screen or stainless steel frit inside one end of the tube. Slowly add 0.14 to 0.15 g of packing material to the column and gently vibrate to settle the packing inside the column. When strands of wire are used to retain the packing material inside the column, leave 6.0 mm (0.25 in.) of space at the top of the column.

9.3 Column conditioning—Both the TCEP and WCOT columns are to be briefly conditioned before use. Connect the columns to the valve (see 11.1) in the chromatographic oven. Adjust the carrier gas flows as in 11.3 and place the valve in the RESET position. After several minutes, increase the column oven temperature to 120 °C and maintain these conditions for 5 to 10 min. Cool the columns below 60 °C before shutting off the carrier flow.

10. *Sampling.*

10.1 Gasoline samples to be analyzed by this test method shall be sampled in accordance with 40 CFR part 80, appendix D.

11. *Preparation of apparatus and establishment of conditions.*

11.1 Assembly—Connect the WCOT column to the valve system using low volume connectors and narrow bore tubing. It is important to minimize the volume of the chromatographic system that comes in contact with the sample, otherwise peak broadening will occur.

11.2 Adjust the operating conditions to those listed in Table 1, but do not turn on the detector circuits. Check the system for leaks before proceeding further.

11.3 Flow rate adjustment.

11.3.1 Attach a flow measuring device to the column vent with the valve in the RESET position and adjust the pressure to the injection port to give 5.0 mL/min flow (14 psig). Soap bubble flow meters are suitable.

11.3.2 Attach a flow measuring device to the split injector vent and adjust flow from the split vent using the A flow controller to give a flow of 70 mL/min. Recheck the column vent flow set in 11.3.1 and adjust if necessary.

11.3.3 Switch the valve to the BACKFLUSH position and adjust the variable restrictor to give the same column vent flow set in 11.3.1. This is necessary to minimize flow changes when the valve is switched.

11.3.4 Switch the valve to the inject position RESET and adjust the B flow controller to give a flow of 3.0 to 3.2 mL/min at the detector exit. When required for the particular instrumentation used, add makeup flow or TCD switching flow to give a total of 21 mL/min at the detector exit.

11.4 When a thermal conductivity detector is used, turn on the filament current and allow the detector to equilibrate. When a

flame ionization detector is used, set the hydrogen and air flows and ignite the flame.

11.5 Determine the Time of Backflush—The time to backflush will vary slightly for each column system and must be determined experimentally as follows. The start time of the integrator and valve timer must be synchronized with the injection to accurately reproduce the backflush time.

11.5.1 Initially assume a valve BACKFLUSH time of 0.23 min. With the valve RESET, inject 3 µL of a blend containing at least 0.5% or greater oxygenates (7.3), and simultaneously begin timing the analysis. At 0.23 min., rotate the valve to the BACKFLUSH position and leave it there until the complete elution of benzene is realized. Note this time as the RESET time, which is the time at which the valve is returned to the RESET position. When all of the remaining hydrocarbons are backflushed the signal will return to a stable baseline and the system is ready for another analysis. The chromatogram should appear similar to that illustrated in Fig. 2.

11.5.2 It is necessary to optimize the valve BACKFLUSH time by analyzing a standard blend containing oxygenates. The correct BACKFLUSH time is determined experimentally by using valve switching times between 0.2 and 0.3 min. When the valve is switched too soon, C_5 and lighter hydrocarbons are backflushed and are co-eluted in the C_4 alcohol section of the chromatogram. When the valve BACKFLUSH is switched too late, part or all of the MTBE component is vented resulting in an incorrect MTBE measurement. Chromatograms resulting from incorrect valve times are shown in Figs. 3 and 4.

12. Calibration and standardization.

12.1 Identification—Determine the retention time of each component by injecting small amounts either separately or in known mixtures or by comparing the relative retention times with those in Table 2.

12.2 Standardization—The area under each peak in the chromatogram is considered a quantitative measure of the corresponding compound. Measure the peak area of each oxygenate and of the internal standard by either manual methods or electronic integrator. Calculate the relative volume response factor of each oxygenate, relative to the internal standard, according to Test Method D 4626.

TABLE 2—RETENTION CHARACTERISTICS FOR TCEP/WCOT COLUMN SET CONDITIONS AS IN TABLE 1

Component	Retention time, min	Relative retention time (t-amyl alcohol=1.00)
Methanol	3.21	0.44

TABLE 2—RETENTION CHARACTERISTICS FOR TCEP/WCOT COLUMN SET CONDITIONS AS IN TABLE 1—Continued

Component	Retention time, min	Relative retention time (t-amyl alcohol=1.00)
Ethanol	3.58	0.50
Isopropanol	3.95	0.56
tert-Butanol	4.31	0.61
n-Propanol	4.75	0.68
MTBE	5.29	0.76
sec-Butanol	5.63	0.82
Isobutanol	6.33	0.93
n-Butanol	7.55	1.10
Benzene	7.88	1.17

13. Procedure.

13.1 Preparation of sample—Precisely add a quantity of the internal standard to an accurately measured quantity of sample. Concentrations of 1 to 5 volume percent have been used successfully.

13.2 Chromatographic analysis—Introduce a representative aliquot of the sample, containing internal standard, into the chromatograph using the same technique as used for the calibration analyses. An injection volume of 3 µL with a 15:1 split ratio has been used successfully.

13.3 Interpretation of chromatogram—Compare the results of sample analyses to those of calibration analyses to determine identification of oxygenates present.

14. Calculation.

14.1 After identifying the various oxygenates, measure the area of each oxygenate peak and that of the internal standard. Calculate the volume percent of each oxygenate as follows:

$$V_j = \frac{V_S \times PA_j \times 100}{PA_S \times S_j \times V_G}$$

where:

V_j=volume percent of oxygenate to be determined,

V_S=volume of internal standard (tert-amyl alcohol) added,

V_G=volume of gasoline sample taken,

PA_j=peak area of the oxygenate to be determined,

PA_S=peak area of the internal standard (tert-amyl alcohol), and

S_j=relative volume response factor of each component (relative to the internal standard).

14.2 Report the volume of each oxygenate. If the volume percent exceeds 10%, dilute the sample to a concentration lower than 10% and repeat the procedures in sections 13 and 14.

15. Precision and bias.

15.1 Precision—The precision of this test method as determined by statistical examination of the interlaboratory test results is as follows:

15.1.1 Repeatability—The difference between successive results obtained by the same operator with the same apparatus under constant operating conditions on identical test materials would, in the long run, in the normal and correct operation of the test method exceed the following values only in one case in twenty (see Table 3).

Methanol 0.086 × (V+0.070).
Ethanol 0.083 × (V+0.000).
Isopropanol 0.052 × (V+0.150).
n-Propanol 0.040 × (V+0.026).
Isobutanol 0.064 × (V+0.086)
sec-Butanol 0.014 × √ V
tert-Butanol 0.052 × (V+0.388)
n-Butanol 0.043 × (V+0.020)
MTBE 0.104 × (V+0.028)

where V is the mean volume percent.

15.1.2 Reproducibility—The difference between two single and independent results obtained by different operators working in different laboratories on identical material would, in the long run, exceed the following values only in one case in twenty (see Table 3).

Methanol 0.361 × (V+0.070).
Ethanol 0.373 × (V+0.000).
Isopropanol 0.214 × (V+0.150).
n-Propanol 0.163 × (V+0.026).
Isobutanol 0.179 × (V+0.086)
sec-Butanol 0.277 × √ V
tert-Butanol 0.178 × (V+0.388)
n-Butanol 0.415 × (V+0.020)
MTBE 0.244×(V+0.028)

where V is the mean volume percent.

15.2 Bias—Since there is no accepted reference material suitable for determining bias for the procedure in the test method, bias cannot be determined.

TABLE 3—PRECISION INTERVALS—DETERMINED FROM COOPERATIVE STUDY DATA SUMMARIZED IN SECTION 15

Components	Volume percent							
	0.20	0.50	1.00	2.00	3.00	4.00	5.00	6.00
	Repeatability							
Methanol	0.02	0.05	0.09	0.18	0.26	0.35	0.44	0.52
Ethanol	0.02	0.04	0.08	0.17	0.25	0.33	0.42	0.50
Isopropanol	0.02	0.03	0.06	0.11	0.16	0.22	0.27	0.32
n-Propanol	0.01	0.02	0.04	0.08	0.12	0.16	0.20	0.24
tert-Butanol	0.03	0.05	0.07	0.12	0.18	0.23	0.28	0.33
sec-Butanol	0.01	0.01	0.01	0.02	0.02	0.03	0.03	0.03
Isobutanol	0.02	0.04	0.07	0.13	0.20	0.26	0.33	0.39
n-Butanol	0.01	0.02	0.04	0.09	0.13	0.17	0.22	0.26
MTBE	0.02	0.05	0.11	0.21	0.31	0.42	0.52	0.63
	Reproducibility							
Methanol	0.10	0.21	0.39	0.75	1.11	1.47	1.83	2.19
Ethanol	0.07	0.19	0.37	0.75	1.12	1.49	1.87	2.24
Isopropanol	0.07	0.14	0.25	0.46	0.67	0.89	1.10	1.32
n-Propanol	0.04	0.09	0.17	0.33	0.49	0.66	0.82	0.98
tert-Butanol	0.10	0.16	0.25	0.43	0.60	0.78	0.96	1.14
sec-Butanol	0.12	0.20	0.28	0.39	0.48	0.55	0.62	0.68
Isobutanol	0.05	0.10	0.19	0.37	0.55	0.73	0.91	1.09
n-Butanol	0.09	0.22	0.42	0.84	1.25	1.67	2.08	2.50
MTBE	0.05	0.12	0.23	0.45	0.68	0.90	1.13	1.35

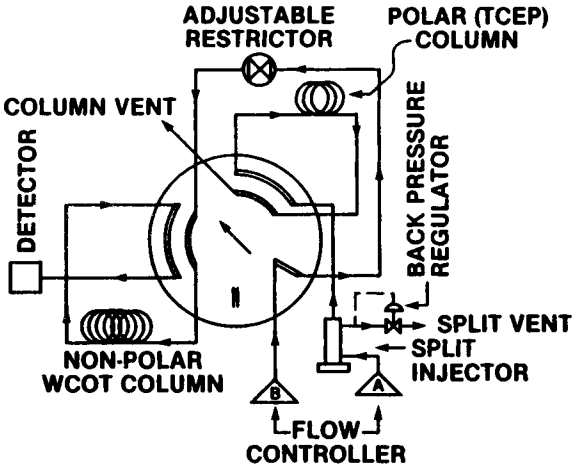

Valve in RESET Position

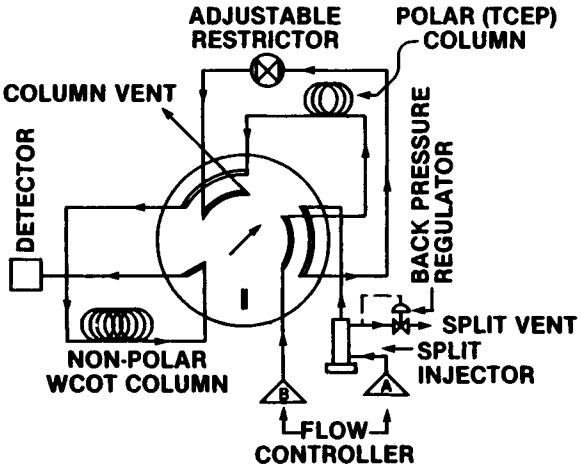

Valve in BACKFLUSH Position

FIG. 1 Analysis of Oxygenates in Gasoline Schematic of Chromatographic System

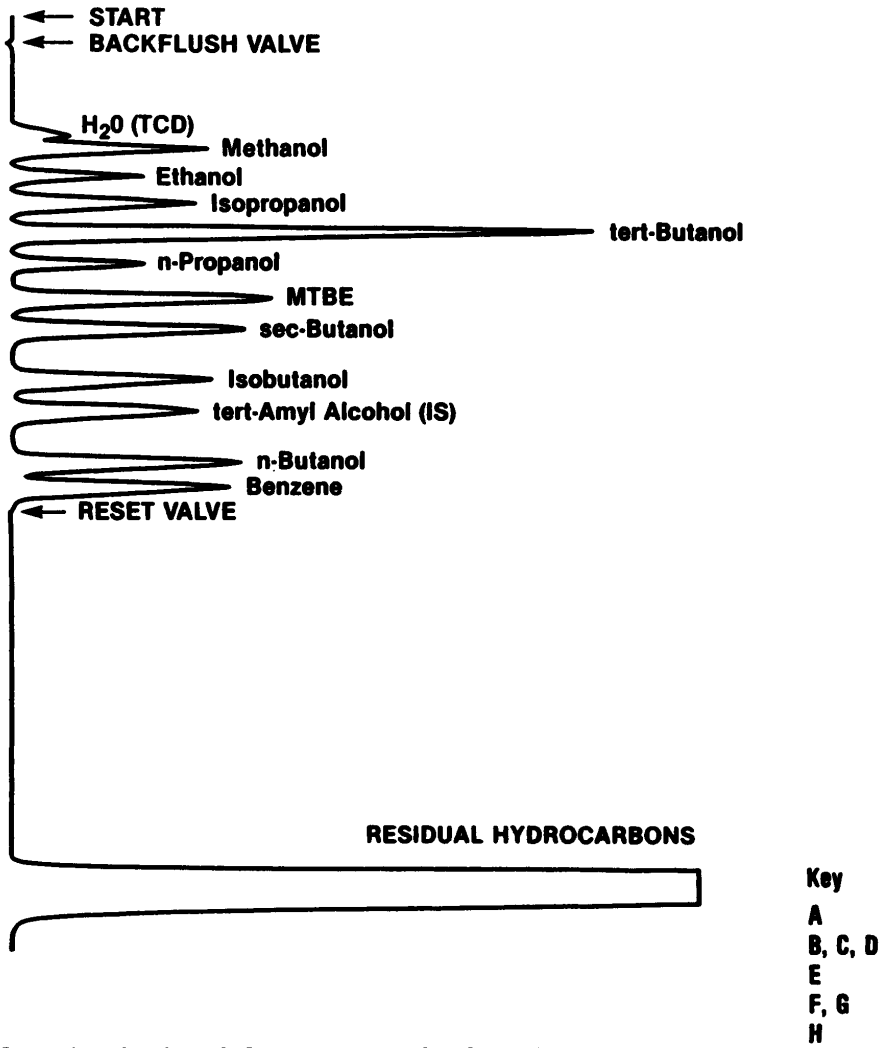

Key
A
B, C, D
E
F, G
H
I
J

FIG. 2 Analysis of Oxygenates in Gasoline Example of Chromatographic Results

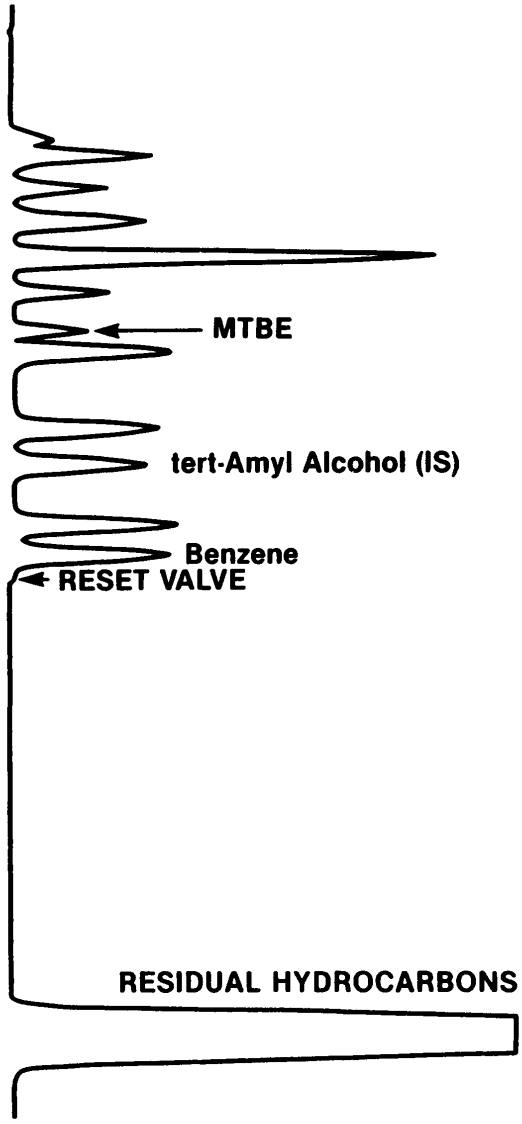

FIG. 3 Analysis of Oxygenates in Gasoline Example Chromatogram Showing Loss of MTBE Due to Venting with Light Hydrocarbons by Late Backflush Time

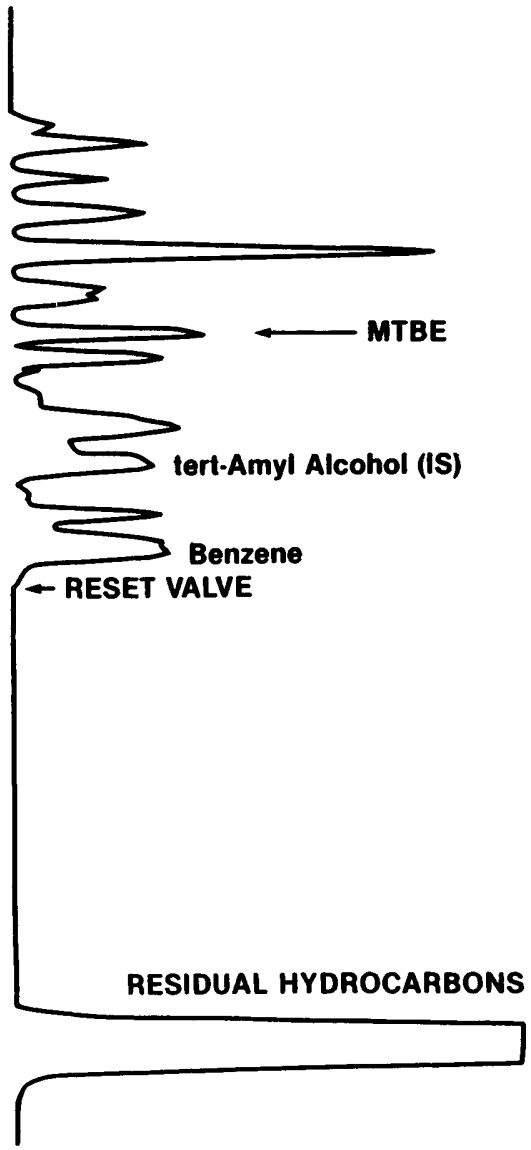

FIG. 4 Analysis of Oxygenates in Gasoline Example Chromatogram Showing Presence of Interferences Caused by Early Backflush Time

[54 FR 11903, Mar. 22, 1989]

APPENDIX G TO PART 80—SAMPLING PROCEDURES FOR DIESEL FUEL

1. Scope

1.1 This method covers procedures for obtaining representative samples of diesel fuel for the purpose of testing for compliance with the cetane index and sulfur percentage standards set forth in §80.29.

2. Summary of Method

2.1 It is necessary that the samples be truly representative of the diesel fuel in question. The precautions required to ensure the representative character of the samples are numerous and depend upon the tank, carrier, container or line from which the sample is being obtained, the type and cleanliness of the sample container, and the sampling procedures that are to be used. A summary of the sampling procedures and their application is presented in Table 1. Each procedure is suitable for sampling a material under definite storage, transportation, or container conditions. The basic principle of each procedure is to obtain a sample in such manner and from such locations in the tank or other container that the sample will be truly representative of the diesel fuel.

3. Description of Terms

3.1 *Average sample* is one that consists of proportionate parts from all sections of the container.

3.2 *All-levels sample* is one obtained by submerging a stoppered beaker or bottle to a point as near as possible to the draw-off level, then opening the sampler and raising it at a rate such that it is about ¾ full (maximum 85 percent) as it emerges from the liquid. An all-levels sample is not necessarily an average sample because the tank volume may not be proportional to the depth and because the operator may not be able to raise the sampler at the variable rate required for proportionate filling. The rate of filling is proportional to the square root of the depth of immersion.

3.3 *Running sample* is one obtained by lowering an unstoppered beaker or bottle from the top of the gasoline to the level of the bottom of the outlet connection or swing line, and returning it to the top of the top of the diesel fuel at a uniform rate of speed such that the beaker or bottle is about ¾ full when withdrawn from the diesel fuel.

3.4 *Spot sample* is one obtained at some specific location in the tank by means of a thief bottle, or beaker.

3.5 *Top sample* is a spot sample obtained 6 inches (150 mm) below the top surface of the liquid (Figure 1 of appendix D).

3.6 *Upper sample* is a spot sample taken at the mid-point of the upper third of the tank contents (Figure 1 of appendix D).

3.7 *Middle sample* is a spot sample obtained from the middle of the tank contents (Figure 1 of appendix D).

3.8 *Lower sample* is a spot sample obtained at the level of the fixed tank outlet or the swing line outlet (Figure 1 of appendix D).

3.9 *Clearance sample* is a spot sample taken 4 inches (100 mm) below the level of the tank outlet (Figure 1 of appendix D).

3.10 *Bottom sample* is a spot sample obtained from the material on the bottom surface of the tank, container, or line at its lowest point.

3.11 *Drain sample* is a tap sample obtained from the draw-off or discharge valve. Occasionally, a drain sample may be the same as a bottom sample, as in the case of a tank car.

3.12 *Continuous sample* is one obtained from a pipeline in such manner as to give a representative average of a moving stream.

3.13 *Nozzle sample* is one obtained from a diesel pump nozzle which dispenses diesel fuel from a storage tank at a retail outlet or a wholesale purchaser-consumer facility.

4. Sample Containers

4.1 Sample containers may be clear or brown glass bottles, or cans. The clear glass bottle is advantageous because it may be examined visually for cleanliness, and also allows visual inspection of the sample for free water or solid impurities. The brown glass bottle affords some protection from light. Cans with the seams soldered on the exterior surface with a flux of rosin in a suitable solvent are preferred because such a flux is easily removed with diesel fuel, whereas many others are very difficult to remove. If such cans are not available, other cans made with a welded construction that are not affected by, and that do not affect, the diesel fuel being sampled are acceptable.

4.2 Container closure. Cork or glass stoppers, or screw caps of plastic or metal may be used for glass bottles; screw caps only shall be used for cans to provide a vapor-tight closure seal. Corks must be of good quality, clean and free from holes and loose bits of cork. Never use rubber stoppers. Contact of the sample with the cork may be prevented by wrapping tin or aluminum foil around the cork before forcing it into the bottle.

Glass stoppers must be a perfect fit. Screw caps must be protected by a cork disk faced with tin or aluminum foil, or other material that will not affect petroleum or petroleum products. In addition, a phenolic cap with a teflon coated liner may be used.

4.3 Cleaning procedure. The method of cleaning all sample containers must be consistent with the residual materials in the container and must produce sample containers that are clean and free of water, dirt, lint, washing compounds, naphtha, or other

solvents, soldering fluxes or acids, corrosion, rust, and oil.

New sample containers should be inspected and cleaned if necessary. Dry the container by either passing a current of clean, warm air through the container or by allowing it to air dry in a clean area at room temperature. When dry, stopper or cap the container immediately.

5. Sampling Apparatus

5.1 Sampling apparatus is described in detail under each of the specific sampling procedures. Clean, dry, and free all sampling apparatus from any substance that might contaminate the material, using the procedure described in 4.3.

6. Time and Place of Sampling

6.1 When loading or discharging diesel fuel, take samples from both shipping and receiving tanks, and from the pipeline if required.

6.2 Ship or barge tanks. Sample each product after the vessel is loaded or just before unloading.

6.3 Tank cars. Sample the product after the car is loaded or just before unloading.

NOTE: When taking samples from tanks suspected of containing flammable atmospheres, precautions should be taken to guard against ignitions due to static electricity. Metal or conductive objects, such as gage tapes, sample containers, and thermometers, should not be lowered into or suspended in a compartment or tank which is being filled or immediately after cessation of pumping. A waiting period of approximately one minute will generally permit a substantial relaxation of the electrostatic charge; under certain conditions a longer period may be deemed advisable.

7. Obtaining Samples

7.1 Directions for sampling cannot be made explicit enough to cover all cases. Extreme care and good judgment are necessary to ensure samples that represent the general character and average condition of the material. Clean hands are important. Clean gloves may be worn but only when absolutely necessary, such as in cold weather, or when handling materials at high temperature, or for reasons of safety. Select wiping cloths so that lint is not introduced, contaminating samples.

7.2 As many petroleum vapors are toxic and flammable, avoid breathing them or igniting them from an open flame or a spark produced by static. Follow all safety precautions specific to the material being sampled.

8. Handling Samples

8.1 Container outage. Never completely fill a sample container, but allow adequate room for expansion, taking into consideration the temperature of the liquid at the time of filling and the probable maximum temperature to which the filled container may be subjected.

9. Shipping Samples

9.1 To prevent loss of liquid during shipment, and to protect against moisture and dust, cover with suitable vapor tight caps. The caps of all containers must be screwed down tightly and checked for leakage. Postal and express office regulations applying to the shipment of flammable liquids must be observed.

10. Labeling Sample Containers

10.1 Label the container immediately after a sample is obtained. Use waterproof and oilproof ink or a pencil hard enough to dent the tag, since soft pencil and ordinary ink markings are subject to obliteration from moisture, oil smearing and handling. An indelible identification symbol, such as a bar code, may be used in lieu of a manually addressed label. The label shall reference the following information:

10.1.1 Date and time (the period elapsed during continuous sampling);

10.1.2 Name of the sample;

10.1.3 Name or number and owner of the vessel, car, or container;

10.1.4 Brand and grade of material; and

10.1.5 Reference symbol or identification number.

11. Sampling procedures

11.1 The standard sampling procedures described in this method are summarized in Table 1. Alternative sampling procedures may be used if a mutually satisfactory agreement has been reached by the party(ies) involved and EPA and such agreement has been put in writing and signed by authorized officials.

TABLE 1—SUMMARY OF DIESEL FUEL SAMPLING PROCEDURES AND APPLICABILITY

Type of container	Procedure	Paragraph
Storage tanks, ship and barge tanks, tank cars, tank trucks.	Bottle sampling	11.2
Storage tanks with taps ..	Tap sampling	11.3
Pipe and lines	Continuous line sampling.	11.4
Retail outlet and wholesale purchaser-consumer facility storage tanks.	Nozzle sampling ...	11.5

11.2 Bottle or beaker sampling. The bottle or beaker sampling procedure is applicable

for sampling liquids of 16 pounds (1.12 kgf/cm²) RVP or less in tank cars, tank trucks, shore tanks, ship tanks, and barge tanks.

11.2.1 Apparatus. A suitable sampling bottle or beaker as shown in Figure 2 of appendix D is required.

11.2.2 Procedure.

11.2.2.1 All-levels sample. Lower the weighted, stoppered bottle or beaker as near as possible to the draw-off level, pull out the stopper with a sharp jerk of the cord or chain and raise the bottle at a uniform rate so that it is about ¾ full as it emerges from the liquid.

11.2.2.2 Running sample. Lower the unstoppered bottles or beaker as near as possible to the level of the bottom of the outlet connection or swing line and then raise the bottle or beaker to the top of the gasoline at a uniform rate of speed such that it is about ¾ full when withdrawn from the diesel fuel.

11.2.2.3 Upper, middle, and lower samples. Lower the weighted, stoppered bottle to the proper depths (Figure 1 of appendix D) as follows:

Upper sample ...	middle of upper third of the tank contents
Middle sample	middle of the tank contents
Lower sample ..	level of the fixed tank outlet or the swing-line outlet

At the selected level pull out the stopper with a sharp jerk of the cord or chain and allow the bottle or beaker to fill completely, as evidenced by the cessation of air bubbles. When full, raise the bottle or beaker, pour off a small amount, and stopper immediately.

11.2.2.4 Top sample. Obtain this sample (Figure 1 of appendix D) in the same manner as specified in 11.2.2.3 but at six inches (150 mm) below the top surface of the tank contents.

11.2.2.5 Handling. Stopper and label bottle samples immediately after taking them, and deliver to the laboratory in the original sampling bottles.

11.3 Tap sampling. The tap sampling procedure is applicable for sampling liquids of twenty-six pounds (1.83 kgf/cm²) RVP or less in tanks which are equipped with suitable sampling taps or lines. The assembly for tap sampling is shown in Figure 3 of appendix D.

11.3.1 Apparatus

11.3.1.1 Tank taps. The tank should be equipped with at least three sampling taps placed equidistant throughout the tank height and extending at least three feet (0.9 meter) inside the tank shell. A standard ¼ inch pipe with suitable valve is satisfactory.

11.3.1.2 Tube. A delivery tube that will not contaminate the product being sampled and long enough to reach to the bottom of the sample container is required to allow submerged filling.

11.3.1.3 Sample containers. Use clean, dry glass bottles of convenient size and strength or metal containers to receive the samples.

11.3.2 Procedure

11.3.2.1 Before a sample is drawn, flush the tap (or gage glass drain cock) and line until they are purged completely. Connect the clean delivery tube to the tap. Draw upper, middle, or lower samples directly from the respective taps after the flushing operation. Stopper and label the sample container immediately after filling, and deliver it to the laboratory.

11.4 Continuous sampling. The continuous sampling procedure is applicable for sampling liquids of 16 pounds (1.12 kgf/cm²) RVP or less and semiliquids in pipelines, filling lines, and transfer lines. The continuous sampling may be done manually or by using automatic devices.

11.4.1 Apparatus

11.4.1.1 Sampling probe. The function of the sampling probe is to withdraw from the flow stream a portion that will be representative of the entire stream. The apparatus assembly for continuous sampling is shown in Figure 4 of Appendix D. Probe designs that are commonly used are as follows:

11.4.1.1.1 A tube extending to the center of the line and beveled at a 45 degree angle facing upstream (Figure 4(a) of appendix D).

11.4.1.1.2 A long-radius forged elbow or pipe bend extending to the center line of the pipe and facing upstream. The end of the probe should be reamed to give a sharp entrance edge (Figure 4(b) of appendix D).

11.4.1.1.3 A closed-end tube with a round orifice spaced near the closed end which should be positioned in such a way that the orifice is in the center of the pipeline and is facing the stream as shown in Figure 4(c) of appendix D.

11.4.1.2 Probe location. Since the fluid to be sampled may not in all cases be homogeneous, the location, the position and the size of the sampling probe shoud be such as to minimize stratification or dropping out of heavier particles within the tube or the displacement of the product within the tube as a result of variation in gravity of the flowing stream. The sampling probe should be located preferably in a vertical run of pipe and as near as practicable to the point where the product passes to the receiver. The probe should always be in a horizontal position.

11.4.1.2.1 The sampling lines should be as short as practicable and should be cleared before any samples are taken.

11.4.1.2.2 Where adequate flowing velocity is not available, a suitable device for mixing the fluid flow to ensure a homogeneous mixture at all rates of flow and to eliminate stratification should be installed upstream of the sampling tap. Some effective devices for obtaining a homogeneous mixture are as follows: Reduction in pipe size; a series of

baffles; orifice or perforated plate; and a combination of any of these methods.

11.4.1.2.3 The design or sizing of these devices is optional with the user, as long as the flow past the sampling point is homogeneous and stratification is eliminated.

11.4.1.3 To control the rate at which the sample is withdrawn, the probe or probes should be fitted with valves or plug cocks.

11.4.1.4 Automatic sampling devices that meet the standards set out in 11.4.1.5 may be used in obtaining samples of diesel fuel. The quality of sample collected must be of sufficient size for analysis, and its composition should be identical with the composition of the batch flowing in the line while the sample is being taken. An automatic sampler installation necessarily includes not only the automatic sampling device that extracts the samples from the line, but also a suitable probe, connecting lines, auxiliary equipment, and a container in which the sample is collected. Automatic samplers may be classified as follows:

11.4.1.4.1 Continuous sampler, time cycle (nonproportional) type. A sampler designed and operated in such a manner that it transfers equal increments of liquid from the pipeline to the sample container at a uniform rate of one or more increments per minute is a continuous sampler.

11.4.1.4.2 Continuous sampler, flow-responsive (proportional) type. A sampler that is designed and operated in such a manner that it will automatically adjust the quantity of sample in proportion to the rate of flow is a flow-responsive (proportional) sampler. Adjustment of the quantity of sample may be made either by varying the frequency of transferring equal increments of sample to the sample container, or by varying the volume of the increments while maintaining a constant frequency of transferring the increments to the sample container. The apparatus assembly for continuous sampling is shown in Figure 4 of appendix D.

11.4.1.4.3 Intermittent sampler. A sampler that is designed and operated in such a manner that it transfers equal increments of liquid from a pipeline to the sample container at a uniform rate of less than one increment per minute is an intermittent sampler.

11.4.1.5 Standards of installation. Automatic sampler installations should meet all safety requirements in the plant or area where used, and should comply with American National Standard Code for Pressure Piping, and other applicable codes (ANSI B31.1). The sampler should be so installed as to provide ample access space for inspection and maintenance.

11.4.1.5.1 Small lines connecting various elements of the installation should be so arranged that complete purging of the automatic sampler and of all lines can be accomplished effectively. All fluid remaining in the sampler and the lines from the preceding sampling cycle should be purged immediately before the start of any given sampling operation.

11.4.1.5.2 In those cases where the sampler design is such that complete purging of the sampling lines and the sampler is not possible, a small pump should be installed in order to circulate a continuous stream from the sampling tube past or through the sampler and back into the line. The automatic sampler should then withdraw the sample from the sidestream through the shortest possible connection.

11.4.1.5.3 Under certain conditions, there may be a tendency for water and heavy particles to drop out in the discharge line from the sampling device and appear in the sample container during some subsequent sampling period. To circumvent this possibility, the discharge pipe from the sampling device should be free of pockets or enlarged pipe areas, and preferably should be pitched downward to the sample container.

11.4.1.5 To ensure clean, free-flowing lines, piping should be designed for periodic cleaning.

11.4.1.6 Field calibration. Composite samples obtained from the automatic sampler installation should be verified for quantity performance in a manner that meets with the approval of all parties concerned (including EPA), at least once a month and more often if conditions warrant. In the case of time-cycle samplers, deviations in quantity of the sample taken should not exceed ± five percent for any given setting. In the case of flow-responsive samplers, the deviation in quantity of sample taken per 1,000 barrels of flowing stream should not exceed ± 5 percent. For the purpose of field-calibrating an installation, the composite sample obtained from the automatic sampler under test should be verified for quality by comparing on the basis of physical and chemical properties, with either a properly secured continuous nonautomatic sample or tank sample. The tank sample should be taken under the following conditions:

11.4.1.6.1 The batch pumped during the test interval should be diverted into a clean tank and a sample taken within one hour after cessation of pumping.

11.4.1.6.2 If the sampling of the delivery tank is to be delayed beyond one hour, then the tank selected must be equipped with an adequate mixing means. For valid comparison, the sampling of the delivery tank must be completed within eight hours after cessation of pumping, even though the tank is equipped with a motor-driven mixer.

11.4.1.6.3 When making a normal full-tank delivery from a tank, a properly secured sample may be used to check the results of the sampler if the parties (including EPA) mutually agree to this procedure.

11.4.1.7 Receiver. The receiver must be a clean, dry container of convenient size to receive the sample. All connections from the sample probe to the sample container must be free of leaks. Two types of container may be used, depending upon service requirements.

11.4.1.7.1 Atmospheric container. The atmospheric container shall be constructed in such a way that it retards evaporation loss and protects the sample from extraneous material such as rain, snow, dust, and trash. The construction should allow cleaning, interior inspection, and complete mixing of the sample prior to removal. The container should be provided with a suitable vent.

11.4.1.7.2 Closed container. The closed container shall be constructed in such a manner that it prevents evaporation loss. The construction must allow cleaning, interior inspection and complete mixing of the sample prior to removal. The container should be equipped with a pressure-relief valve.

11.4.2 Procedure.

11.4.2.1 Nonautomatic sample. Adjust the valve or plug cock from the sampling probe so that a steady stream is drawn from the probe. Whenever possible, the rate of sample withdrawal should be such that the velocity of liquid flowing through the probe is approximately equal to the average linear velocity of the stream flowing through the pipeline. Measure and record the rate of sample withdrawal as gallons per hour. Divert the sample stream to the sampling container continuously or intermittently to provide a quantity of sample that will be of sufficient size for analysis.

11.4.2.2 Automatic sampling. Purge the sampler and the sampling lines immediately before the start of a sampling operation. If the sample design is such that complete purging is not possible, circulate a continuous stream from the probe past or through the sampler and back into the line. Withdraw the sample from the side stream through the automatic sampler using the shortest possible connections. Adjust the sampler to deliver not less than one and not more than 40 gallons (151 liters) of sample during the desired sampling period. For time-cycle samplers, record the rate at which sample increments were taken per minute. For flow-responsive samplers, record the proportion of sample to total stream. Label the samples and deliver them to the laboratory in the containers in which they were collected.

11.5 Nozzle sampling. The nozzle sampling procedure is applicable for sampling diesel fuel from a retail outlet or wholesale purchaser-consumer facility storage tank.

11.5.1 Apparatus. Sample containers conforming with 4.1 should be used. A spacer, if appropriate (Figure 6 of appendix D), and a nozzle extension device similar to that shown in Figures 7 or 7a of appendix D shall be used when nozzle sampling. The nozzle extension device does not need to be identical to that shown in Figure 7 or 7a of appendix D but it should be a device that will bottom fill the container.

11.5.2 Procedure. Immediately after diesel fuel has been delivered from the pump and the pump has been reset, deliver a small amount of product into the sample container. Rinse sample container and dump product into waste container. Insert nozzle extension (Figure 7 or 7a of appendix D) into sample container and insert pump nozzle into extension with slot over air bleed hole. Fill slowly through nozzle extension to 70–80 percent full (Figure 8 of appendix D). Remove nozzle extension. Cap sample container at once. Check for leaks.

12. Special Precautions and Instructions.

12.1 Precautions. Official samples should be taken by, or under the immediate supervision of, a person of judgment, skill, and sampling experience. Never prepare composite samples for this test. Make certain that containers which are to be shipped by common carrier conform to applicable Interstate Commerce Commission, state, and local regulations. When flushing or purging lines or containers, observe the pertinent regulations and precautions against fire, explosion, and other hazards.

12.2 Sample containers. Use containers of not less than one quart (0.9 liter) nor more than two gallons (7.6 liters) capacity, of sufficient strength to withstand the pressure to which they may be subjected. Open-type containers have a single opening which permits sampling by immersion. Closed-type containers have two openings, one in each end (or the equivalent thereof), fitted with valves suitable for sampling by water displacement or by purging.

12.3 Transfer connections. The transfer connection for the open-type container consists of an air tube and a liquid delivery tube assembled in a cap or stopper. The air tube extends to the bottom of the container. One end of the liquid delivery tube is long enough to reach the bottom of the diesel fuel chamber while the sample is being transferred to the chamber. The transfer connection for the closed-type container consists of a single tube with a connection suitable for attaching it to one of the openings of the sample container. The tube is long enough to reach the bottom of the diesel chamber while the sample is being transferred.

12.4 Sampling open tanks. Use clean containers of the open type when sampling open tanks and tank cars. An all-level sample obtained by the bottle procedure described in 11.2 is recommended. Before taking the sample, flush the container by immersing it in the product to be sampled. Then obtain the sample immediately. Pour off enough so that the container will be 70–80 percent full and

close it promptly. Label the container and deliver it to the laboratory.

12.5 Sampling closed tanks. Containers of either the open or closed type may be used to obtain samples from closed or pressure tanks. If the closed type is used, obtain the sample using the water displacement procedure described in 12.8 or the purging procedure described in 12.9. The water displacement procedure is preferable because the flow of product involved in the purging procedure may be hazardous.

12.6 Water displacement procedure. Completely fill the closed-type container with water and close the valves. While permitting a small amount of product to flow through the fittings, connect the top or inlet valve of the container to the tank sampling tap or valve. Then open all valves on the inlet side of the container. Open the bottom or outlet valve slightly to allow the water to be displaced slowly by the sample entering the container. Regulate the flow so that there is no appreciable change in pressure within the container. Close the outlet valve as soon as diesel fuel discharges from the outlet; then in succession close the inlet valve and the sampling valve on the tank. Disconnect the container and withdraw enough of the contents so that it will be 70–80 percent full. If the vapor pressure of the product is not high enough to force liquid from the container, open both the upper and lower valves slightly to remove the excess. Promptly seal and label the container, and deliver it to the laboratory.

12.7 Purging procedure. Connect the inlet valve of the closed-type container to the tank sampling tap or valve. Throttle the outlet valve of the container so that the pressure in it will be approximately equal to that in the container being sampled. Allow a volume of product equal to at least twice that of the container to flow through the sampling system. Then close all valves, the outlet valve first, the inlet valve of the container second, and the tank sampling valve last, and disconnect the container immediately. Withdraw enough of the contents so that the sample container will be 70–80 percent full. If the vapor pressure of the product is not high enough to force liquid from the container, open both the upper and lower valves slightly to remove the excess. Promptly seal and label the container, and deliver it to the laboratory.

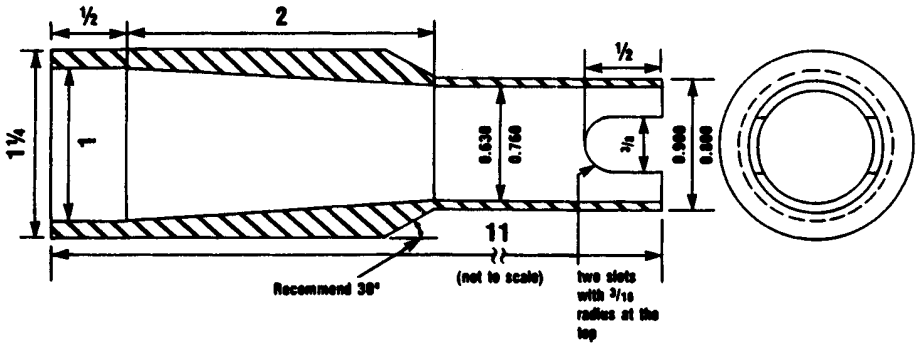

All Dimensions in inches (full scale except as noted)
All decimal dimensions represent minimum and maximum
Tolerance for all other dimensions is ± 1/32"
Made of non-ferrous material, uneffected by gasoline

Figure 7a. Nozzle Extension for Nozzle Sampling

(Compatible with narrow neck sample containers)

[55 FR 34140, Aug. 21, 1990]

FINDING AIDS

A list of CFR titles, subtitles, chapters, subchapters and parts and an alphabetical list of agencies publishing in the CFR are included in the CFR Index and Finding Aids volume to the Code of Federal Regulations which is published separately and revised annually.

Material Approved for Incorporation by Reference
Table of CFR Titles and Chapters
Alphabetical List of Agencies Appearing in the CFR
Table of OMB Control Numbers
List of CFR Sections Affected

Material Approved for Incorporation by Reference

(Revised as of July 1, 1997)

The Director of the Federal Register has approved under 5 U.S.C. 552(a) and 1 CFR Part 51 the incorporation by reference of the following publications. This list contains only those incorporations by reference effective as of the revision date of this volume. Incorporations by reference found within a regulation are effective upon the effective date of that regulation. For more information on incorporation by reference, see the preliminary pages of this volume.

40 CFR, CHAPTER I (PARTS 72 TO 80): SUBCHAPTER C—AIR PROGRAMS ENVIRONMENTAL PROTECTION AGENCY

	40 CFR
American Gas Association 1515 Wilson Blvd., Arlington, VA 22209	
AGA Report No. 3: Orifice Metering of Natural Gas and Other Related Hydrocarbon Fluids, Part 1, General Equations and Uncertainty Guidelines (October 1990 edition); Part 2, Specification and Installation Requirements (February 1991 edition); and Part 3, Natural Gas Applications (August 1992 edition).	75.20; Appendices D and E of Part 75
AGA Report No. 7: Measurement of Gas by Turbine Meters (1985 edition).	75.6; 75.20; Appendix D of Part 75
American Institute of Certified Public Accountants, Inc. 1211 Avenue of the Americas, New York, NY 10036	
Codification of Statements on Auditing Standards, ''Statements on Standards for Attestation Engagements, 1991, Identification Number 059021.	80.125
American Society of Mechanical Engineers (ASME) 345 East 47th St., New York, NY 10017	
ASME MFC–3M–1989 with September 1990 Errata Measurement of Fluid Flow in Pipes Using Orifice, Nozzle, and Venturi.	75.20 and Appendix D of Part 75
ASME MFC–4M–1986 (Reaffirmed 1990) Measurement of Gas Flow by Turbine Meters.	75.20 and Appendix D of Part 75
ASME MFC–5M–1985 Measurement of Liquid Flow in Closed Conduits Using Transit-Time Ultrasonic Flowmeters.	75.20 and Appendix D of Part 75
ASME MFC–6M–1987 with June 1987 Errata Measurement of Fluid Flow in Pipes Using Vortex Flow Meters.	75.20 and Appendix D of Part 75
ASME MFC–7M–1987 (Reaffirmed 1992) Measurement of Gas Flow by Means of Critical Flow Venturi Nozzles.	75.20 and Appendix D of Part 75
ASME MFC–9M–1988 with December 1989 Errata Measurement of Liquid Flow in Closed Conduits by Weighing Method.	75.20 and Appendix D of Part 75
ASME Performance Test Code 4.2 (1991), Test Code for Coal Pulverizers.	76.4; 76.15
American Society for Testing and Materials 1916 Race Street, Philadelphia, Pennsylvania 19103	
ASTM D 86–90, Standard Test Method for Distillation of Petroleum Products.	80.46

40 CFR, CHAPTER I (PARTS 72 TO 80): SUBCHAPTER C—AIR PROGRAMS—Continued

ENVIRONMENTAL PROTECTION AGENCY—Continued

	40 CFR
ASTM D129–91 Standard Test Method for Sulfur in Petroleum Products (General Bomb Method).	Appendices A and D of Part 75 and 72.7
ASTM D240–87 (Reapproved 1991) Standard Test Method for Heat of Combustion of Liquid Hydrocarbon Fuels by Bomb Calorimeter.	Appendices A, D, and F of Part 75
ASTM D287–82 (Reapproved 1987) Standard Test Method for API Gravity of Crude Petroleum and Petroleum Products (Hydrometer Method).	Appendix D of Part 75
ASTM D388–92 Standard Classification of Coals by Rank	72.2 and Appendix F of Part 75
ASTM D396–90a Standard Specification for Fuel Oils	72.2
ASTM D439–81, Standard Specifications for Automotive Gasoline	80.2(d); 80.22(b)
ASTM D941–88 Standard Test Method for Density and Relative Density (Specific Gravity) of Liquids by Lipkin Bicapillary Pycnometer.	Appendix D of Part 75
ASTM D975–91 Standard Specification for Diesel Fuel Oils	72.2
ASTM D 975–93, Standard Specification for Diesel Fuel Oils	79.56(d)(5) and (e)(3)
ASTM D 976–80 Standard Methods for Calculated Cetane Index of Distillate Fuels.	80.2(w)
ASTM D1072–90 Standard Test Method for Total Sulfur in Fuel Gases.	Appendix D of Part 75 and 72.7
ASTM D1217–91 Standard Test Method for Density and Relative Density (Specific Gravity) of Liquids by Bingham Pycnometer.	Appendix D of Part 75
ASTM D1250–80 (Reapproved 1990) Standard Guide for Petroleum Measurement Tables.	Appendix D of Part 75
ASTM D1265–92 Standard Practice for Sampling Liquified Petroleum (LP) Gases (Manual Method).	72.7
ASTM D1298–85 (Reapproved 1990) Standard Practice for Density, Relative Density (Specific Gravity) or API Gravity of Crude Petroleum and Liquid Petroleum Products by Hydrometer Method.	Appendix D of Part 75
ASTM D 1319–88 Standard Test Method for Hydrocarbon Types in Liquid Petroleum Products by Fluorescent Indicator Adsorption.	80.2(z)
ASTM D 1319–93, Standard Test Method for Hydrocarbon Types in Liquid Petroleum Products by Fluorescent Indicator Adsorption.	80.46
ASTM D1480–91 Standard Test Method for Density and Relative Density (Specific Gravity) of Viscous Materials by Bingham Pycnometer.	Appendix D of Part 75
ASTM D1481–91 Standard Test Method for Density and Relative Density (Specific Gravity) of Viscous Materials by Lipkin Bicapillary Pycnometer.	Appendix D of Part 75
ASTM D1552–90 Standard Test Method for Sulfur in Petroleum Products (High Temperature Method).	Appendices A and D of Part 75
ASTM D1826–88 Standard Test Method for Calorific (Heating) Value of Gases in Natural Gas Range by Continuous Recording Calorimeter.	Appendix F of Part 75
ASTM D1945–91 Standard Test Method for Analysis of Natural Gas by Gas Chromatography.	Appendices F and G of Part 75
ASTM D1946–90 Standard Practice for Analysis of Reformed Gas by Gas Chromatography.	Appendices F and G of Part 75
ASTM D 1989–92 Standard Test Method for Gross Caloric Value of Coal and Coke by Microprocessor Controlled Isoperibol Calorimeters.	Appendix F of Part 75

Material Approved for Incorporation by Reference

40 CFR, CHAPTER I (PARTS 72 TO 80): SUBCHAPTER C—AIR PROGRAMS—Continued

ENVIRONMENTAL PROTECTION AGENCY—Continued

	40 CFR
ASTM D 2013–86 Standard Method of Preparing Coal Samples for Analysis.	Appendix F of Part 75; 75.15
ASTM D2015–91 Standard Test Method for Gross Calorific Value of Coal and Coke by the Adiabatic Bomb Calorimeter.	Appendices A, D, and F of Part 75; 75.15
ASTM D2234–89 Standard Test Methods for Collection of a Gross Sample of Coal.	Appendix F of Part 75; 75.15
ASTM D2382–88 Standard Test Method for Heat of Combustion of Hydrocarbon Fuels by Bomb Calorimeter (High-Precision Method).	Appendices D, and F of Part 75
ASTM D2502–87 Standard Test Method for Estimation of Molecular Weight (Relative Molecular Mass) of Petroleum Oils from Viscosity Measurements.	Appendix G of Part 75
ASTM D2503–82 (Reapproved 1987) Standard Test Method for Molecular Weight (Relative Molecular Mass) of Hydrocarbons by Thermoelectric Measurement of Vapor Pressure.	Appendix G of Part 75
ASTM D 2622–87 Standard Test Method for Sulfur in Petroleum Products by X-Ray Spectrometry.	80.2(y)
ASTM D2622–92 Standard Test Method for Sulfur in Petroleum Products by X-Ray Spectrometry.	72.7; Appendices A and D of Part 75; 80.46
ASTM D2699–80, Standard Test Method for Knock Characteristics of Motor Fuels by the Research Method.	80.2(d)
ASTM D2700–81, Standard Test Method for Knock Characteristics of Motor and Aviation Fuels by the Motor Method.	80.2(d)
ASTM D 2880–90a, Standard Specification for Gas Turine Fuel Oils	72.2
ASTM D2892–84, Standard Test Method for Distillation of Crude Petroleum (15-Theoretical Plate Column).	Appendix E to Part 80
ASTM D 3172–89, Standard Practice for Proximate Analysis of Coal and Coke.	76.4; 76.15
ASTM D3174–89 Standard Test Method for Ash in the Analysis Sample of Coal and Coke from Coal.	Appendix G of Part 75
ASTM D3176–89 Standard Practice for Ultimate Analysis of Coal and Coke.	Appendices A and F of Part 75; 76.4; 76.15
ASTM D3177–89 Standard Test Methods for Total Sulfur in the Analysis Sample of Coal and Coke.	Appendix A of Part 75; 75.15
ASTM D3178–89 Standard Test Methods for Carbon and Hydrogen in the Analysis Sample of Coal and Coke.	Appendix G of Part 75
ASTM D3238–90 Standard Test Method for Calculation of Carbon Distribution and Structural Group Analysis of Petroleum Oils by the n-d-M Method.	Appendix G of Part 75
ASTM D 3286–91a Standard Test Method for Gross Calorific Value of Coal and Coke by the Isoperibol Bomb Calorimeter.	Appendix F of Part 75
ASTM D 3588–91 Standard Practice for Calculating Heat Value, Compressibility Factor, and Relative Density (Specific Gravity) of Gaseous Fuels.	Appendix F of Part 75
ASTM D 3606–92, Standard Test Method for Determination of Benzene and Toluene in Finished Motor and Aviation Gasoline by Gas Chromatography.	80.46
ASTM D4052–91 Standard Test Method for Density and Relative Density of Liquids by Digital Density Meter.	Appendix D of Part 75

40 CFR, CHAPTER I (PARTS 72 TO 80): SUBCHAPTER C—AIR PROGRAMS—Continued

ENVIRONMENTAL PROTECTION AGENCY—Continued

	40 CFR
ASTM D4057–88 Standard Practice for Manual Sampling of Petroleum and Petroleum Products.	Appendix D of Part 75 and 72.7
ASTM D4177–82 (Reapproved 1990) Standard Practice for Automatic Sampling of Petroleum and Petroleum Products.	Appendix D of Part 75
ASTM D4239–85 Standard Test Methods for Sulfur in the Analysis Sample of Coal and Coke Using High Temperature Tube Furnace Combustion Methods.	Appendix A of Part 75; 75.15
ASTM D 4294–83 Standard Test Method for Sulfur in Petroleum Products by Non-dispersive X-ray Fluorescence Spectrometry.	80.30(g)(2)(ii)
ASTM D4294–90 Standard Test Method for Sulfur in Petroleum Products by Energy-Dispersive X-Ray Fluorescence Spectroscopy.	72.7 and Appendices A and D of Part 75
ASTM D 4468–85 (Reapproved 1989) Standard Test Method for Total Sulfur in Gaseous Fuels by Hydrogenolysis and Rateometric Calorimetry.	Appendix D of Part 75
ASTM D 4814–93a, Standard Specification for Automotive Spark-Ignition Engine Fuel.	79.56(d)(5) and (e)(3)
ASTM D4814–95c, Standard Specification for Automotive Spark-Ignition Engine Fuel.	80.164(a)(5)
ASTM D 4815–93, Standard Test Method for Determination of MTBE, ETBE, TAME, DIPE, tertiary-Amyl Alcohol and C_1 to C_4 Alcohols in Gasoline by Gas Chromatography.	80.46
ASTM D 4891–89 Standard Test Method for Heating Value of Gases in Natural Gas Range by Stolchiometric Combustion.	Appendix F of Part 75
ASTM D 5291–92 Standard Test Methods for Instrumental Determination of Carbon, Hydrogen, and Nitrogen in Petroleum Products and Lubricants.	Appendix G of Part 75
ASTM D 5500–94, Standard Test Method for Vehicle Evaluation of Unleaded Automotive Spark-Ignition Fuel for Intake Valve Deposit Formation.	80.165(b)
ASTM D 5504–94 Standard Test Method for Determination of Sulfur Compounds in Natural Gas and Gaseous Fuels by Gas Chromatography and Chemiluminescence.	Appendix D of Part 75
ASTM D 5598–94, Standard Specification for Evaluating Unleaded Automotive Spark-Ignition Engine Fuel for Electronic Port Fuel Injector Fouling.	80.165(a)
ASTM E1–86, Standard Specification for ASTM Thermometers	Appendix E of Part 80
California Air Resources Board, Stationary Source Division 2020 L St., P.O. Box 285, Sacramento, CA 95814	
BMW–10,000 Miles Intake Valve Test Procedure, March 1, 1991	80.165(c)
Test Method for Evaluating Port Fuel Injector (PFI) Deposits in Vehicle Engines, March 1, 1991.	80.165(c)
Gas Processors Association 6526 East 60th Street, Tulsa, OK 74145	
GPA Standard 2172–86, Calculation of Gross Heating Value, Relative Density and Compressibility Factor for Natural Gas Mixtures from Compositional Analysis.	Appendices D, E, and F of Part 75
GPA Standard 2261–90, Analysis for Natural Gas and Similar Gaseous Mixtures by Gas Chromatography.	Appendices D, F, and G of Part 75
Institute of Internal Auditors, Inc. 249 Maitland Avenue, Altamonte Springs, FL 32701–4201	

Material Approved for Incorporation by Reference

40 CFR, CHAPTER I (PARTS 72 TO 80): SUBCHAPTER C—AIR PROGRAMS—Continued

ENVIRONMENTAL PROTECTION AGENCY—Continued

	40 CFR
Codification of Standards for the Professional Practice of Internal Auditing, 1989, Identification Number ISBN 0–89413–207–5.	80.125
International Organization for Standardization Case Postale 56, CH–1211 Geneve 20, Switzerland	
ISO 8316: 1987(E), Measurement of Liquid Flow in Closed Conduits—Method of Collection of the Liquid in a Volumetric Tank.	75.20; Appendices D and E of Part 75
ISO 9931 (December 1991), Coal—Sampling of Pulverized Coal Conveyed by Gases in Direct Fired Coal Systems.	76.4; 76.15
U.S. Government Printing Office Washington, DC 20402–9371; Telephone: 202–512–1800; Telefacsimile: 202–275–0019	
U.S. Department of Health and Human Services, Guide for the Care and Use of Laboratory Animals, 1985.	79.61(c)(3), (d)(2), and (d)(4)

Table of CFR Titles and Chapters

(Revised as of June 20, 1997)

Title 1—General Provisions

I Administrative Committee of the Federal Register (Parts 1—49)
II Office of the Federal Register (Parts 50—299)
IV Miscellaneous Agencies (Parts 400—500)

Title 2—[Reserved]

Title 3—The President

I Executive Office of the President (Parts 100—199)

Title 4—Accounts

I General Accounting Office (Parts 1—99)
II Federal Claims Collection Standards (General Accounting Office—Department of Justice) (Parts 100—299)

Title 5—Administrative Personnel

I Office of Personnel Management (Parts 1—1199)
II Merit Systems Protection Board (Parts 1200—1299)
III Office of Management and Budget (Parts 1300—1399)
IV Advisory Committee on Federal Pay (Parts 1400—1499)
V The International Organizations Employees Loyalty Board (Parts 1500—1599)
VI Federal Retirement Thrift Investment Board (Parts 1600—1699)
VII Advisory Commission on Intergovernmental Relations (Parts 1700—1799)
VIII Office of Special Counsel (Parts 1800—1899)
IX Appalachian Regional Commission (Parts 1900—1999)
XI Armed Forces Retirement Home (Part 2100)
XIV Federal Labor Relations Authority, General Counsel of the Federal Labor Relations Authority and Federal Service Impasses Panel (Parts 2400—2499)
XV Office of Administration, Executive Office of the President (Parts 2500—2599)
XVI Office of Government Ethics (Parts 2600—2699)
XXI Department of the Treasury (Parts 3100—3199)
XXII Federal Deposit Insurance Corporation (Part 3201)
XXIII Department of Energy (Part 3301)

Title 5—Administrative Personnel—Continued

Table of CFR Titles and Chapters	
XXIV	Federal Energy Regulatory Commission (Part 3401)
XXVI	Department of Defense (Part 3601)
XXVIII	Department of Justice (Part 3801)
XXIX	Federal Communications Commission (Parts 3900—3999)
XXX	Farm Credit System Insurance Corporation (Parts 4000—4099)
XXXI	Farm Credit Administration (Parts 4100—4199)
XXXIII	Overseas Private Investment Corporation (Part 4301)
XXXV	Office of Personnel Management (Part 4501)
XL	Interstate Commerce Commission (Part 5001)
XLI	Commodity Futures Trading Commission (Part 5101)
XLII	Department of Labor (Part 5201)
XLIII	National Science Foundation (Part 5301)
XLV	Department of Health and Human Services (Part 5501)
XLVI	Postal Rate Commission (Part 5601)
XLVII	Federal Trade Commission (Part 5701)
XLVIII	Nuclear Regulatory Commission (Part 5801)
L	Department of Transportation (Part 6001)
LII	Export-Import Bank of the United States (Part 6201)
LIII	Department of Education (Parts 6300—6399)
LIV	Environmental Protection Agency (Part 6401)
LVII	General Services Administration (Part 6701)
LVIII	Board of Governors of the Federal Reserve System (Part 6801)
LIX	National Aeronautics and Space Administration (Part 6901)
LX	United States Postal Service (Part 7001)
LXI	National Labor Relations Board (Part 7101)
LXII	Equal Employment Opportunity Commission (Part 7201)
LXIII	Inter-American Foundation (Part 7301)
LXV	Department of Housing and Urban Development (Part 7501)
LXVI	National Archives and Records Administration (Part 7601)
LXIX	Tennessee Valley Authority (Part 7901)
LXXI	Consumer Product Safety Commission (Part 8101)
LXXIV	Federal Mine Safety and Health Review Commission (Part 8401)
LXXVI	Federal Retirement Thrift Investment Board (Part 8601)
LXXVII	Office of Management and Budget (Part 8701)

Title 6—[Reserved]

Title 7—Agriculture

	SUBTITLE A—Office of the Secretary of Agriculture (Parts 0—26)
	SUBTITLE B—Regulations of the Department of Agriculture
I	Agricultural Marketing Service (Standards, Inspections, Marketing Practices), Department of Agriculture (Parts 27—209)
II	Food and Consumer Service, Department of Agriculture (Parts 210—299)

Title 7—Agriculture—Continued

Table of CFR Titles and Chapters	
III	Animal and Plant Health Inspection Service, Department of Agriculture (Parts 300—399)
IV	Federal Crop Insurance Corporation, Department of Agriculture (Parts 400—499)
V	Agricultural Research Service, Department of Agriculture (Parts 500—599)
VI	Natural Resources Conservation Service, Department of Agriculture (Parts 600—699)
VII	Farm Service Agency, Department of Agriculture (Parts 700—799)
VIII	Grain Inspection, Packers and Stockyards Administration (Federal Grain Inspection Service), Department of Agriculture (Parts 800—899)
IX	Agricultural Marketing Service (Marketing Agreements and Orders; Fruits, Vegetables, Nuts), Department of Agriculture (Parts 900—999)
X	Agricultural Marketing Service (Marketing Agreements and Orders; Milk), Department of Agriculture (Parts 1000—1199)
XI	Agricultural Marketing Service (Marketing Agreements and Orders; Miscellaneous Commodities), Department of Agriculture (Parts 1200—1299)
XIII	Northeast Dairy Compact Commission (Parts 1300—1399)
XIV	Commodity Credit Corporation, Department of Agriculture (Parts 1400—1499)
XV	Foreign Agricultural Service, Department of Agriculture (Parts 1500—1599)
XVI	Rural Telephone Bank, Department of Agriculture (Parts 1600—1699)
XVII	Rural Utilities Service, Department of Agriculture (Parts 1700—1799)
XVIII	Rural Housing Service, Rural Business-Cooperative Service, Rural Utilities Service, and Farm Service Agency, Department of Agriculture (Parts 1800—2099)
XXVI	Office of Inspector General, Department of Agriculture (Parts 2600—2699)
XXVII	Office of Information Resources Management, Department of Agriculture (Parts 2700—2799)
XXVIII	Office of Operations, Department of Agriculture (Parts 2800—2899)
XXIX	Office of Energy, Department of Agriculture (Parts 2900—2999)
XXX	Office of Finance and Management, Department of Agriculture (Parts 3000—3099)
XXXI	Office of Environmental Quality, Department of Agriculture (Parts 3100—3199)
XXXII	[Reserved]
XXXIII	Office of Transportation, Department of Agriculture (Parts 3300—3399)
XXXIV	Cooperative State Research, Education, and Extension Service, Department of Agriculture (Parts 3400—3499)
XXXV	Rural Housing Service, Department of Agriculture (Parts 3500—3599)

Title 7—Agriculture—Continued

XXXVI National Agricultural Statistics Service, Department of Agriculture (Parts 3600—3699)

XXXVII Economic Research Service, Department of Agriculture (Parts 3700—3799)

XXXVIII World Agricultural Outlook Board, Department of Agriculture (Parts 3800—3899)

XLI [Reserved]

XLII Rural Business-Cooperative Service and Rural Utilities Service, Department of Agriculture (Parts 4200—4299)

Title 8—Aliens and Nationality

I Immigration and Naturalization Service, Department of Justice (Parts 1—499)

Title 9—Animals and Animal Products

I Animal and Plant Health Inspection Service, Department of Agriculture (Parts 1—199)

II Grain Inspection, Packers and Stockyards Administration (Packers and Stockyards Programs), Department of Agriculture (Parts 200—299)

III Food Safety and Inspection Service, Meat and Poultry Inspection, Department of Agriculture (Parts 300—599)

Title 10—Energy

I Nuclear Regulatory Commission (Parts 0—199)

II Department of Energy (Parts 200—699)

III Department of Energy (Parts 700—999)

X Department of Energy (General Provisions) (Parts 1000—1099)

XI United States Enrichment Corporation (Parts 1100—1199)

XV Office of the Federal Inspector for the Alaska Natural Gas Transportation System (Parts 1500—1599)

XVII Defense Nuclear Facilities Safety Board (Parts 1700—1799)

Title 11—Federal Elections

I Federal Election Commission (Parts 1—9099)

Title 12—Banks and Banking

I Comptroller of the Currency, Department of the Treasury (Parts 1—199)

II Federal Reserve System (Parts 200—299)

III Federal Deposit Insurance Corporation (Parts 300—399)

IV Export-Import Bank of the United States (Parts 400—499)

V Office of Thrift Supervision, Department of the Treasury (Parts 500—599)

VI Farm Credit Administration (Parts 600—699)

VII National Credit Union Administration (Parts 700—799)

Title 12—Banks and Banking—Continued

VIII Federal Financing Bank (Parts 800—899)

IX Federal Housing Finance Board (Parts 900—999)

XI Federal Financial Institutions Examination Council (Parts 1100—1199)

XIV Farm Credit System Insurance Corporation (Parts 1400—1499)

XV Thrift Depositor Protection Oversight Board (Parts 1500—1599)

XVII Office of Federal Housing Enterprise Oversight, Department of Housing and Urban Development (Parts 1700-1799)

XVIII Community Development Financial Institutions Fund, Department of the Treasury (Parts 1800—1899)

Title 13—Business Credit and Assistance

I Small Business Administration (Parts 1—199)

III Economic Development Administration, Department of Commerce (Parts 300—399)

Title 14—Aeronautics and Space

I Federal Aviation Administration, Department of Transportation (Parts 1—199)

II Office of the Secretary, Department of Transportation (Aviation Proceedings) (Parts 200—399)

III Commercial Space Transportation, Federal Aviation Administration, Department of Transportation (Parts 400—499)

V National Aeronautics and Space Administration (Parts 1200—1299)

Title 15—Commerce and Foreign Trade

SUBTITLE A—Office of the Secretary of Commerce (Parts 0—29)

SUBTITLE B—Regulations Relating to Commerce and Foreign Trade

I Bureau of the Census, Department of Commerce (Parts 30—199)

II National Institute of Standards and Technology, Department of Commerce (Parts 200—299)

III International Trade Administration, Department of Commerce (Parts 300—399)

IV Foreign-Trade Zones Board, Department of Commerce (Parts 400—499)

VII Bureau of Export Administration, Department of Commerce (Parts 700—799)

VIII Bureau of Economic Analysis, Department of Commerce (Parts 800—899)

IX National Oceanic and Atmospheric Administration, Department of Commerce (Parts 900—999)

XI Technology Administration, Department of Commerce (Parts 1100—1199)

XIII East-West Foreign Trade Board (Parts 1300—1399)

XIV Minority Business Development Agency (Parts 1400—1499)

Title 15—Commerce and Foreign Trade—Continued

Table of CFR Titles and Chapters

SUBTITLE C—Regulations Relating to Foreign Trade Agreements

XX Office of the United States Trade Representative (Parts 2000—2099)

SUBTITLE D—Regulations Relating to Telecommunications and Information

XXIII National Telecommunications and Information Administration, Department of Commerce (Parts 2300—2399)

Title 16—Commercial Practices

I Federal Trade Commission (Parts 0—999)

II Consumer Product Safety Commission (Parts 1000—1799)

Title 17—Commodity and Securities Exchanges

I Commodity Futures Trading Commission (Parts 1—199)

II Securities and Exchange Commission (Parts 200—399)

IV Department of the Treasury (Parts 400—499)

Title 18—Conservation of Power and Water Resources

I Federal Energy Regulatory Commission, Department of Energy (Parts 1—399)

III Delaware River Basin Commission (Parts 400—499)

VI Water Resources Council (Parts 700—799)

VIII Susquehanna River Basin Commission (Parts 800—899)

XIII Tennessee Valley Authority (Parts 1300—1399)

Title 19—Customs Duties

I United States Customs Service, Department of the Treasury (Parts 1—199)

II United States International Trade Commission (Parts 200—299)

III International Trade Administration, Department of Commerce (Parts 300—399)

Title 20—Employees' Benefits

I Office of Workers' Compensation Programs, Department of Labor (Parts 1—199)

II Railroad Retirement Board (Parts 200—399)

III Social Security Administration (Parts 400—499)

IV Employees' Compensation Appeals Board, Department of Labor (Parts 500—599)

V Employment and Training Administration, Department of Labor (Parts 600—699)

VI Employment Standards Administration, Department of Labor (Parts 700—799)

VII Benefits Review Board, Department of Labor (Parts 800—899)

VIII Joint Board for the Enrollment of Actuaries (Parts 900—999)

Title 20—Employees' Benefits—Continued

IX Office of the Assistant Secretary for Veterans' Employment and Training, Department of Labor (Parts 1000—1099)

Title 21—Food and Drugs

I Food and Drug Administration, Department of Health and Human Services (Parts 1—1299)

II Drug Enforcement Administration, Department of Justice (Parts 1300—1399)

III Office of National Drug Control Policy (Parts 1400—1499)

Title 22—Foreign Relations

I Department of State (Parts 1—199)

II Agency for International Development, International Development Cooperation Agency (Parts 200—299)

III Peace Corps (Parts 300—399)

IV International Joint Commission, United States and Canada (Parts 400—499)

V United States Information Agency (Parts 500—599)

VI United States Arms Control and Disarmament Agency (Parts 600—699)

VII Overseas Private Investment Corporation, International Development Cooperation Agency (Parts 700—799)

IX Foreign Service Grievance Board Regulations (Parts 900—999)

X Inter-American Foundation (Parts 1000—1099)

XI International Boundary and Water Commission, United States and Mexico, United States Section (Parts 1100—1199)

XII United States International Development Cooperation Agency (Parts 1200—1299)

XIII Board for International Broadcasting (Parts 1300—1399)

XIV Foreign Service Labor Relations Board; Federal Labor Relations Authority; General Counsel of the Federal Labor Relations Authority; and the Foreign Service Impasse Disputes Panel (Parts 1400—1499)

XV African Development Foundation (Parts 1500—1599)

XVI Japan-United States Friendship Commission (Parts 1600—1699)

XVII United States Institute of Peace (Parts 1700—1799)

Title 23—Highways

I Federal Highway Administration, Department of Transportation (Parts 1—999)

II National Highway Traffic Safety Administration and Federal Highway Administration, Department of Transportation (Parts 1200—1299)

I National Highway Traffic Safety Administration, Department of Transportation (Parts 1300—1399)

Title 24—Housing and Urban Development

Table of CFR Titles and Chapters

SUBTITLE A—Office of the Secretary, Department of Housing and Urban Development (Parts 0—99)

SUBTITLE B—Regulations Relating to Housing and Urban Development

I Office of Assistant Secretary for Equal Opportunity, Department of Housing and Urban Development (Parts 100—199)

II Office of Assistant Secretary for Housing-Federal Housing Commissioner, Department of Housing and Urban Development (Parts 200—299)

III Government National Mortgage Association, Department of Housing and Urban Development (Parts 300—399)

V Office of Assistant Secretary for Community Planning and Development, Department of Housing and Urban Development (Parts 500—599)

VI Office of Assistant Secretary for Community Planning and Development, Department of Housing and Urban Development (Parts 600—699) [Reserved]

VII Office of the Secretary, Department of Housing and Urban Development (Housing Assistance Programs and Public and Indian Housing Programs) (Parts 700—799)

VIII Office of the Assistant Secretary for Housing—Federal Housing Commissioner, Department of Housing and Urban Development (Section 8 Housing Assistance Programs and Section 202 Direct Loan Program) (Parts 800—899)

IX Office of Assistant Secretary for Public and Indian Housing, Department of Housing and Urban Development (Parts 900—999)

X Office of Assistant Secretary for Housing—Federal Housing Commissioner, Department of Housing and Urban Development (Interstate Land Sales Registration Program) (Parts 1700—1799)

XII Office of Inspector General, Department of Housing and Urban Development (Parts 2000—2099)

XX Office of Assistant Secretary for Housing—Federal Housing Commissioner, Department of Housing and Urban Development (Parts 3200—3899)

XXV Neighborhood Reinvestment Corporation (Parts 4100—4199)

Title 25—Indians

I Bureau of Indian Affairs, Department of the Interior (Parts 1—299)

II Indian Arts and Crafts Board, Department of the Interior (Parts 300—399)

III National Indian Gaming Commission, Department of the Interior (Parts 500—599)

IV Office of Navajo and Hopi Indian Relocation (Parts 700—799)

V Bureau of Indian Affairs, Department of the Interior, and Indian Health Service, Department of Health and Human Services (Part 900)

VI Office of the Assistant Secretary-Indian Affairs, Department of the Interior (Part 1001)

Title 25—Indians—Continued

VII Office of the Special Trustee for American Indians, Department of the Interior (Part 1200)

Title 26—Internal Revenue

I Internal Revenue Service, Department of the Treasury (Parts 1—799)

Title 27—Alcohol, Tobacco Products and Firearms

I Bureau of Alcohol, Tobacco and Firearms, Department of the Treasury (Parts 1—299)

Title 28—Judicial Administration

I Department of Justice (Parts 0—199)

III Federal Prison Industries, Inc., Department of Justice (Parts 300—399)

V Bureau of Prisons, Department of Justice (Parts 500—599)

VI Offices of Independent Counsel, Department of Justice (Parts 600—699)

VII Office of Independent Counsel (Parts 700—799)

Title 29—Labor

SUBTITLE A—Office of the Secretary of Labor (Parts 0—99)

SUBTITLE B—Regulations Relating to Labor

I National Labor Relations Board (Parts 100—199)

II Office of Labor-Management Standards, Department of Labor (Parts 200—299)

III National Railroad Adjustment Board (Parts 300—399)

IV Office of Labor-Management Standards, Department of Labor (Parts 400—499)

V Wage and Hour Division, Department of Labor (Parts 500—899)

IX Construction Industry Collective Bargaining Commission (Parts 900—999)

X National Mediation Board (Parts 1200—1299)

XII Federal Mediation and Conciliation Service (Parts 1400—1499)

XIV Equal Employment Opportunity Commission (Parts 1600—1699)

XVII Occupational Safety and Health Administration, Department of Labor (Parts 1900—1999)

XX Occupational Safety and Health Review Commission (Parts 2200—2499)

XXV Pension and Welfare Benefits Administration, Department of Labor (Parts 2500—2599)

XXVII Federal Mine Safety and Health Review Commission (Parts 2700—2799)

XL Pension Benefit Guaranty Corporation (Parts 4000—4999)

Title 30—Mineral Resources

I Mine Safety and Health Administration, Department of Labor (Parts 1—199)
II Minerals Management Service, Department of the Interior (Parts 200—299)
III Board of Surface Mining and Reclamation Appeals, Department of the Interior (Parts 300—399)
IV Geological Survey, Department of the Interior (Parts 400—499)
VI Bureau of Mines, Department of the Interior (Parts 600—699)
VII Office of Surface Mining Reclamation and Enforcement, Department of the Interior (Parts 700—999)

Title 31—Money and Finance: Treasury

SUBTITLE A—Office of the Secretary of the Treasury (Parts 0—50)
SUBTITLE B—Regulations Relating to Money and Finance
I Monetary Offices, Department of the Treasury (Parts 51—199)
II Fiscal Service, Department of the Treasury (Parts 200—399)
IV Secret Service, Department of the Treasury (Parts 400—499)
V Office of Foreign Assets Control, Department of the Treasury (Parts 500—599)
VI Bureau of Engraving and Printing, Department of the Treasury (Parts 600—699)
VII Federal Law Enforcement Training Center, Department of the Treasury (Parts 700—799)
VIII Office of International Investment, Department of the Treasury (Parts 800—899)

Title 32—National Defense

SUBTITLE A—Department of Defense
I Office of the Secretary of Defense (Parts 1—399)
V Department of the Army (Parts 400—699)
VI Department of the Navy (Parts 700—799)
VII Department of the Air Force (Parts 800—1099)
SUBTITLE B—Other Regulations Relating to National Defense
XII Defense Logistics Agency (Parts 1200—1299)
XVI Selective Service System (Parts 1600—1699)
XIX Central Intelligence Agency (Parts 1900—1999)
XX Information Security Oversight Office, National Archives and Records Administration (Parts 2000—2099)
XXI National Security Council (Parts 2100—2199)
XXIV Office of Science and Technology Policy (Parts 2400—2499)
XXVII Office for Micronesian Status Negotiations (Parts 2700—2799)
XXVIII Office of the Vice President of the United States (Parts 2800—2899)
XXIX Presidential Commission on the Assignment of Women in the Armed Forces (Part 2900)

Title 33—Navigation and Navigable Waters

I Coast Guard, Department of Transportation (Parts 1—199)
II Corps of Engineers, Department of the Army (Parts 200—399)
IV Saint Lawrence Seaway Development Corporation, Department of Transportation (Parts 400—499)

Title 34—Education

SUBTITLE A—Office of the Secretary, Department of Education (Parts 1—99)
SUBTITLE B—Regulations of the Offices of the Department of Education
I Office for Civil Rights, Department of Education (Parts 100—199)
II Office of Elementary and Secondary Education, Department of Education (Parts 200—299)
III Office of Special Education and Rehabilitative Services, Department of Education (Parts 300—399)
IV Office of Vocational and Adult Education, Department of Education (Parts 400—499)
V Office of Bilingual Education and Minority Languages Affairs, Department of Education (Parts 500—599)
VI Office of Postsecondary Education, Department of Education (Parts 600—699)
VII Office of Educational Research and Improvement, Department of Education (Parts 700—799)
XI National Institute for Literacy (Parts 1100-1199)
SUBTITLE C—Regulations Relating to Education
XII National Council on Disability (Parts 1200—1299)

Title 35—Panama Canal

I Panama Canal Regulations (Parts 1—299)

Title 36—Parks, Forests, and Public Property

I National Park Service, Department of the Interior (Parts 1—199)
II Forest Service, Department of Agriculture (Parts 200—299)
III Corps of Engineers, Department of the Army (Parts 300—399)
IV American Battle Monuments Commission (Parts 400—499)
V Smithsonian Institution (Parts 500—599)
VII Library of Congress (Parts 700—799)
VIII Advisory Council on Historic Preservation (Parts 800—899)
IX Pennsylvania Avenue Development Corporation (Parts 900—999)
XI Architectural and Transportation Barriers Compliance Board (Parts 1100—1199)
XII National Archives and Records Administration (Parts 1200—1299)
XIV Assassination Records Review Board (Parts 1400-1499)

Title 37—Patents, Trademarks, and Copyrights

Table of CFR Titles and Chapters

I Patent and Trademark Office, Department of Commerce (Parts 1—199)

II Copyright Office, Library of Congress (Parts 200—299)

IV Assistant Secretary for Technology Policy, Department of Commerce (Parts 400—499)

V Under Secretary for Technology, Department of Commerce (Parts 500—599)

Title 38—Pensions, Bonuses, and Veterans' Relief

I Department of Veterans Affairs (Parts 0—99)

Title 39—Postal Service

I United States Postal Service (Parts 1—999)

III Postal Rate Commission (Parts 3000—3099)

Title 40—Protection of Environment

I Environmental Protection Agency (Parts 1—799)

V Council on Environmental Quality (Parts 1500—1599)

Title 41—Public Contracts and Property Management

SUBTITLE B—Other Provisions Relating to Public Contracts

50 Public Contracts, Department of Labor (Parts 50–1—50–999)

51 Committee for Purchase From People Who Are Blind or Severely Disabled (Parts 51–1—51–99)

60 Office of Federal Contract Compliance Programs, Equal Employment Opportunity, Department of Labor (Parts 60–1—60–999)

61 Office of the Assistant Secretary for Veterans Employment and Training, Department of Labor (Parts 61–1—61–999)

SUBTITLE C—Federal Property Management Regulations System

101 Federal Property Management Regulations (Parts 101–1—101–99)

105 General Services Administration (Parts 105–1—105–999)

109 Department of Energy Property Management Regulations (Parts 109–1—109–99)

114 Department of the Interior (Parts 114–1—114–99)

115 Environmental Protection Agency (Parts 115–1—115–99)

128 Department of Justice (Parts 128–1—128–99)

SUBTITLE D—Other Provisions Relating to Property Management [Reserved]

SUBTITLE E—Federal Information Resources Management Regulations System

201 Federal Information Resources Management Regulation (Parts 201–1—201–99) [Reserved]

SUBTITLE F—Federal Travel Regulation System

301 Travel Allowances (Parts 301–1—301–99)

302 Relocation Allowances (Parts 302–1—302–99)

Table of CFR Titles and Chapters

303 Payment of Expenses Connected with the Death of Certain Employees (Parts 303–1—303–2)

304 Payment from a Non-Federal Source for Travel Expenses (Parts 304–1—304–99)

Title 42—Public Health

I Public Health Service, Department of Health and Human Services (Parts 1—199)

IV Health Care Financing Administration, Department of Health and Human Services (Parts 400—499)

V Office of Inspector General-Health Care, Department of Health and Human Services (Parts 1000—1999)

Title 43—Public Lands: Interior

SUBTITLE A—Office of the Secretary of the Interior (Parts 1—199)

SUBTITLE B—Regulations Relating to Public Lands

I Bureau of Reclamation, Department of the Interior (Parts 200—499)

II Bureau of Land Management, Department of the Interior (Parts 1000—9999)

III Utah Reclamation Mitigation and Conservation Commission (Parts 10000—10005)

Title 44—Emergency Management and Assistance

I Federal Emergency Management Agency (Parts 0—399)

IV Department of Commerce and Department of Transportation (Parts 400—499)

Title 45—Public Welfare

SUBTITLE A—Department of Health and Human Services (Parts 1—199)

SUBTITLE B—Regulations Relating to Public Welfare

II Office of Family Assistance (Assistance Programs), Administration for Children and Families, Department of Health and Human Services (Parts 200—299)

III Office of Child Support Enforcement (Child Support Enforcement Program), Administration for Children and Families, Department of Health and Human Services (Parts 300—399)

IV Office of Refugee Resettlement, Administration for Children and Families Department of Health and Human Services (Parts 400—499)

V Foreign Claims Settlement Commission of the United States, Department of Justice (Parts 500—599)

VI National Science Foundation (Parts 600—699)

VII Commission on Civil Rights (Parts 700—799)

VIII Office of Personnel Management (Parts 800—899)

Title 45—Public Welfare—Continued

X Office of Community Services, Administration for Children and Families, Department of Health and Human Services (Parts 1000—1099)

XI National Foundation on the Arts and the Humanities (Parts 1100—1199)

XII ACTION (Parts 1200—1299)

XIII Office of Human Development Services, Department of Health and Human Services (Parts 1300—1399)

XVI Legal Services Corporation (Parts 1600—1699)

XVII National Commission on Libraries and Information Science (Parts 1700—1799)

XVIII Harry S. Truman Scholarship Foundation (Parts 1800—1899)

XXI Commission on Fine Arts (Parts 2100—2199)

XXII Christopher Columbus Quincentenary Jubilee Commission (Parts 2200—2299)

XXIII Arctic Research Commission (Part 2301)

XXIV James Madison Memorial Fellowship Foundation (Parts 2400—2499)

XXV Corporation for National and Community Service (Parts 2500—2599)

Title 46—Shipping

I Coast Guard, Department of Transportation (Parts 1—199)

II Maritime Administration, Department of Transportation (Parts 200—399)

IV Federal Maritime Commission (Parts 500—599)

Title 47—Telecommunication

I Federal Communications Commission (Parts 0—199)

II Office of Science and Technology Policy and National Security Council (Parts 200—299)

III National Telecommunications and Information Administration, Department of Commerce (Parts 300—399)

Title 48—Federal Acquisition Regulations System

1 Federal Acquisition Regulation (Parts 1—99)

2 Department of Defense (Parts 200—299)

3 Department of Health and Human Services (Parts 300—399)

4 Department of Agriculture (Parts 400—499)

5 General Services Administration (Parts 500—599)

6 Department of State (Parts 600—699)

7 Agency for International Development (Parts 700—799)

8 Department of Veterans Affairs (Parts 800—899)

9 Department of Energy (Parts 900—999)

10 Department of the Treasury (Parts 1000—1099)

12 Department of Transportation (Parts 1200—1299)

Title 48—Federal Acquisition Regulations System—Continued

Table of CFR Titles and Chapters

13 Department of Commerce (Parts 1300—1399)

14 Department of the Interior (Parts 1400—1499)

15 Environmental Protection Agency (Parts 1500—1599)

16 Office of Personnel Management Federal Employees Health Benefits Acquisition Regulation (Parts 1600—1699)

17 Office of Personnel Management (Parts 1700—1799)

18 National Aeronautics and Space Administration (Parts 1800—1899)

19 United States Information Agency (Parts 1900—1999)

20 Nuclear Regulatory Commission (Parts 2000—2099)

21 Office of Personnel Management, Federal Employees Group Life Insurance Federal Acquisition Regulation (Parts 2100—2199)

23 Social Security Administration (Parts 2300—2399)

24 Department of Housing and Urban Development (Parts 2400—2499)

25 National Science Foundation (Parts 2500—2599)

28 Department of Justice (Parts 2800—2899)

29 Department of Labor (Parts 2900—2999)

34 Department of Education Acquisition Regulation (Parts 3400—3499)

35 Panama Canal Commission (Parts 3500—3599)

44 Federal Emergency Management Agency (Parts 4400—4499)

51 Department of the Army Acquisition Regulations (Parts 5100—5199)

52 Department of the Navy Acquisition Regulations (Parts 5200—5299)

53 Department of the Air Force Federal Acquisition Regulation Supplement (Parts 5300—5399)

54 Defense Logistics Agency, Department of Defense (Part 5452)

57 African Development Foundation (Parts 5700—5799)

61 General Services Administration Board of Contract Appeals (Parts 6100—6199)

63 Department of Transportation Board of Contract Appeals (Parts 6300—6399)

99 Cost Accounting Standards Board, Office of Federal Procurement Policy, Office of Management and Budget (Parts 9900—9999)

Title 49—Transportation

SUBTITLE A—Office of the Secretary of Transportation (Parts 1—99)

SUBTITLE B—Other Regulations Relating to Transportation

I Research and Special Programs Administration, Department of Transportation (Parts 100—199)

II Federal Railroad Administration, Department of Transportation (Parts 200—299)

III Federal Highway Administration, Department of Transportation (Parts 300—399)

Title 49—Transportation—Continued

Table of CFR Titles and Chapters

IV Coast Guard, Department of Transportation (Parts 400—499)

V National Highway Traffic Safety Administration, Department of Transportation (Parts 500—599)

VI Federal Transit Administration, Department of Transportation (Parts 600—699)

VII National Railroad Passenger Corporation (AMTRAK) (Parts 700—799)

VIII National Transportation Safety Board (Parts 800—999)

X Surface Transportation Board, Department of Transportation (Parts 1000—1399)

Title 50—Wildlife and Fisheries

I United States Fish and Wildlife Service, Department of the Interior (Parts 1—199)

II National Marine Fisheries Service, National Oceanic and Atmospheric Administration, Department of Commerce (Parts 200—299)

III International Fishing and Related Activities (Parts 300—399)

IV Joint Regulations (United States Fish and Wildlife Service, Department of the Interior and National Marine Fisheries Service, National Oceanic and Atmospheric Administration, Department of Commerce); Endangered Species Committee Regulations (Parts 400—499)

V Marine Mammal Commission (Parts 500—599)

VI Fishery Conservation and Management, National Oceanic and Atmospheric Administration, Department of Commerce (Parts 600—699)

CFR Index and Finding Aids

Subject/Agency Index

List of Agency Prepared Indexes

Parallel Tables of Statutory Authorities and Rules

Acts Requiring Publication in the Federal Register

List of CFR Titles, Chapters, Subchapters, and Parts

Alphabetical List of Agencies Appearing in the CFR

Alphabetical List of Agencies Appearing in the CFR

(Revised as of June 20, 1997)

Agency	CFR Title, Subtitle or Chapter
ACTION	45, XII
Administrative Committee of the Federal Register	1, I
Advanced Research Projects Agency	32, I
Advisory Commission on Intergovernmental Relations	5, VII
Advisory Committee on Federal Pay	5, IV
Advisory Council on Historic Preservation	36, VIII
African Development Foundation	22, XV
Federal Acquisition Regulation	48, 57
Agency for International Development	22, II
Federal Acquisition Regulation	48, 7
Agricultural Marketing Service	7, I, IX, X, XI
Agricultural Research Service	7, V
Agriculture Department	
Agricultural Marketing Service	7, I, IX, X, XI
Agricultural Research Service	7, V
Animal and Plant Health Inspection Service	7, III; 9, I
Commodity Credit Corporation	7, XIV
Cooperative State Research, Education, and Extension Service	7, XXXIV
Economic Research Service	7, XXXVII
Energy, Office of	7, XXIX
Environmental Quality, Office of	7, XXXI
Farm Service Agency	7, VII, XVIII
Federal Acquisition Regulation	48, 4
Federal Crop Insurance Corporation	7, IV
Finance and Management, Office of	7, XXX
Food and Consumer Service	7, II
Food Safety and Inspection Service	9, III
Foreign Agricultural Service	7, XV
Forest Service	36, II
Grain Inspection, Packers and Stockyards Administration	7, VIII; 9, II
Information Resources Management, Office of	7, XXVII
Inspector General, Office of	7, XXVI
National Agricultural Library	7, XLI
National Agricultural Statistics Service	7, XXXVI
Natural Resources Conservation Service	7, VI
Operations, Office of	7, XXVIII
Rural Business-Cooperative Service	7, XVIII, XLII
Rural Development Administration	7, XLII
Rural Housing Service	7, XVIII, XXXV
Rural Telephone Bank	7, XVI
Rural Utilities Service	7, XVII, XVIII, XLII
Secretary of Agriculture, Office of	7, Subtitle A
Transportation, Office of	7, XXXIII
World Agricultural Outlook Board	7, XXXVIII
Air Force Department	32, VII
Federal Acquisition Regulation Supplement	48, 53
Alaska Natural Gas Transportation System, Office of the Federal Inspector	10, XV
Alcohol, Tobacco and Firearms, Bureau of	27, I
AMTRAK	49, VII
American Battle Monuments Commission	36, IV
American Indians, Office of the Special Trustee	25, VII

Agency	CFR Title, Subtitle or Chapter
Animal and Plant Health Inspection Service	7, III; 9, I
Appalachian Regional Commission	5, IX
Architectural and Transportation Barriers Compliance Board	36, XI
Arctic Research Commission	45, XXIII
Armed Forces Retirement Home	5, XI
Arms Control and Disarmament Agency, United States	22, VI
Army Department	32, V
Engineers, Corps of	33, II; 36, III
Federal Acquisition Regulation	48, 51
Assassination Records Review Board	36, XIV
Benefits Review Board	20, VII
Bilingual Education and Minority Languages Affairs, Office of	34, V
Blind or Severely Disabled, Committee for Purchase From People Who Are	41, 51
Board for International Broadcasting	22, XIII
Census Bureau	15, I
Central Intelligence Agency	32, XIX
Child Support Enforcement, Office of	45, III
Children and Families, Administration for	45, II, III, IV, X
Christopher Columbus Quincentenary Jubilee Commission	45, XXII
Civil Rights, Commission on	45, VII
Civil Rights, Office for	34, I
Coast Guard	33, I; 46, I; 49, IV
Commerce Department	44, IV
Census Bureau	15, I‘
Economic Affairs, Under Secretary	37, V
Economic Analysis, Bureau of	15, VIII
Economic Development Administration	13, III
Emergency Management and Assistance	44, IV
Export Administration, Bureau of	15, VII
Federal Acquisition Regulation	48, 13
Fishery Conservation and Management	50, VI
Foreign-Trade Zones Board	15, IV
International Trade Administration	15, III; 19, III
National Institute of Standards and Technology	15, II
National Marine Fisheries Service	50, II, IV
National Oceanic and Atmospheric Administration	15, IX; 50, II, III, IV, VI
National Telecommunications and Information Administration	15, XXIII; 47, III
National Weather Service	15, IX
Patent and Trademark Office	37, I
Productivity, Technology and Innovation, Assistant Secretary for	37, IV
Secretary of Commerce, Office of	15, Subtitle A
Technology, Under Secretary for	37, V
Technology Administration	15, XI
Technology Policy, Assistant Secretary for	37, IV
Commercial Space Transportation	14, III
Commodity Credit Corporation	7, XIV
Commodity Futures Trading Commission	5, XLI; 17, I
Community Planning and Development, Office of Assistant Secretary for	24, V, VI
Community Services, Office of	45, X
Comptroller of the Currency	12, I
Construction Industry Collective Bargaining Commission	29, IX
Consumer Product Safety Commission	5, LXXI; 16, II
Cooperative State Research, Education, and Extension Service	7, XXXIV
Copyright Office	37, II
Cost Accounting Standards Board	48, 99
Council on Environmental Quality	40, V
Customs Service, United States	19, I
Defense Contract Audit Agency	32, I
Defense Department	5, XXVI; 32, Subtitle A
Advanced Research Projects Agency	32, I
Air Force Department	32, VII
Army Department	32, V; 33, II; 36, III, 48, 51

Agency	CFR Title, Subtitle or Chapter
Defense Intelligence Agency	32, I
Defense Logistics Agency	32, I, XII; 48, 54
Defense Mapping Agency	32, I
Engineers, Corps of	33, II; 36, III
Federal Acquisition Regulation	48, 2
Navy Department	32, VI; 48, 52
Secretary of Defense, Office of	32, I
Defense Contract Audit Agency	32, I
Defense Intelligence Agency	32, I
Defense Logistics Agency	32, XII; 48, 54
Defense Mapping Agency	32, I
Defense Nuclear Facilities Safety Board	10, XVII
Delaware River Basin Commission	18, III
Drug Enforcement Administration	21, II
East-West Foreign Trade Board	15, XIII
Economic Affairs, Under Secretary	37, V
Economic Analysis, Bureau of	15, VIII
Economic Development Administration	13, III
Economic Research Service	7, XXXVII
Education, Department of	5, LIII
Bilingual Education and Minority Languages Affairs, Office of	34, V
Civil Rights, Office for	34, I
Educational Research and Improvement, Office of	34, VII
Elementary and Secondary Education, Office of	34, II
Federal Acquisition Regulation	48, 34
Postsecondary Education, Office of	34, VI
Secretary of Education, Office of	34, Subtitle A
Special Education and Rehabilitative Services, Office of	34, III
Vocational and Adult Education, Office of	34, IV
Educational Research and Improvement, Office of	34, VII
Elementary and Secondary Education, Office of	34, II
Employees' Compensation Appeals Board	20, IV
Employees Loyalty Board	5, V
Employment and Training Administration	20, V
Employment Standards Administration	20, VI
Endangered Species Committee	50, IV
Energy, Department of	5, XXIII; 10, II, III, X
Federal Acquisition Regulation	48, 9
Federal Energy Regulatory Commission	5, XXIV; 18, I
Property Management Regulations	41, 109
Energy, Office of	7, XXIX
Engineers, Corps of	33, II; 36, III
Engraving and Printing, Bureau of	31, VI
Enrichment Corporation, United States	10, XI
Environmental Protection Agency	5, LIV; 40, I
Federal Acquisition Regulation	48, 15
Property Management Regulations	41, 115
Environmental Quality, Office of	7, XXXI
Equal Employment Opportunity Commission	5, LXII; 29, XIV
Equal Opportunity, Office of Assistant Secretary for	24, I
Executive Office of the President	3, I
Administration, Office of	5, XV
Environmental Quality, Council on	40, V
Management and Budget, Office of	25, III, LXXVII; 48, 99
National Drug Control Policy, Office of	21, III
National Security Council	32, XXI; 47, 2
Presidential Documents	3
Science and Technology Policy, Office of	32, XXIV; 47, II
Trade Representative, Office of the United States	15, XX
Export Administration, Bureau of	15, VII
Export-Import Bank of the United States	5, LII; 12, IV
Family Assistance, Office of	45, II
Farm Credit Administration	5, XXXI; 12, VI
Farm Credit System Insurance Corporation	5, XXX; 12, XIV
Farm Service Agency	7, VII, XVIII
Federal Acquisition Regulation	48, 1

Agency	CFR Title, Subtitle or Chapter
Federal Aviation Administration	14, I
Commercial Space Transportation	14, III
Federal Claims Collection Standards	4, II
Federal Communications Commission	5, XXIX; 47, I
Federal Contract Compliance Programs, Office of	41, 60
Federal Crop Insurance Corporation	7, IV
Federal Deposit Insurance Corporation	5, XXII; 12, III
Federal Election Commission	11, I
Federal Emergency Management Agency	44, I
Federal Acquisition Regulation	48, 44
Federal Employees Group Life Insurance Federal Acquisition Regulation	48, 21
Federal Employees Health Benefits Acquisition Regulation	48, 16
Federal Energy Regulatory Commission	5, XXIV; 18, I
Federal Financial Institutions Examination Council	12, XI
Federal Financing Bank	12, VIII
Federal Highway Administration	23, I, II; 49, III
Federal Home Loan Mortgage Corporation	1, IV
Federal Housing Enterprise Oversight Office	12, XVII
Federal Housing Finance Board	12, IX
Federal Inspector for the Alaska Natural Gas Transportation System, Office of	10, XV
Federal Labor Relations Authority, and General Counsel of the Federal Labor Relations Authority	5, XIV; 22, XIV
Federal Law Enforcement Training Center	31, VII
Federal Maritime Commission	46, IV
Federal Mediation and Conciliation Service	29, XII
Federal Mine Safety and Health Review Commission	5, LXXIV; 29, XXVII
Federal Pay, Advisory Committee on	5, IV
Federal Prison Industries, Inc.	28, III
Federal Procurement Policy Office	48, 99
Federal Property Management Regulations	41, 101
Federal Property Management Regulations System	41, Subtitle C
Federal Railroad Administration	49, II
Federal Register, Administrative Committee of	1, I
Federal Register, Office of	1, II
Federal Reserve System	12, II
Board of Governors	5, LVIII
Federal Retirement Thrift Investment Board	5, VI, LXXVI
Federal Service Impasses Panel	5, XIV
Federal Trade Commission	5, XLVII; 16, I
Federal Transit Administration	49, VI
Federal Travel Regulation System	41, Subtitle F
Finance and Management, Office of	7, XXX
Fine Arts, Commission on	45, XXI
Fiscal Service	31, II
Fish and Wildlife Service, United States	50, I, IV
Fishery Conservation and Management	50, VI
Food and Drug Administration	21, I
Food and Consumer Service	7, II
Food Safety and Inspection Service	9, III
Foreign Agricultural Service	7, XV
Foreign Assets Control, Office of	31, V
Foreign Claims Settlement Commission of the United States	45, V
Foreign Service Grievance Board	22, IX
Foreign Service Impasse Disputes Panel	22, XIV
Foreign Service Labor Relations Board	22, XIV
Foreign-Trade Zones Board	15, IV
Forest Service	36, II
General Accounting Office	4, I, II
General Services Administration	5, LVII
Contract Appeals, Board of	48, 61
Federal Acquisition Regulation	48, 5
Federal Property Management Regulations System	41, 101, 105
Federal Travel Regulation System	41, Subtitle F
Payment From a Non-Federal Source for Travel Expenses	41, 304
Payment of Expenses Connected With the Death of Certain Employees	41, 303

Agency	CFR Title, Subtitle or Chapter
Relocation Allowances	41, 302
Travel Allowances	41, 301
Geological Survey	30, IV
Government Ethics, Office of	5, XVI
Government National Mortgage Association	24, III
Grain Inspection, Packers and Stockyards Administration	7, VIII; 9, II
Great Lakes Pilotage	46, III
Harry S. Truman Scholarship Foundation	45, XVIII
Health and Human Services, Department of	5, XLV; 45, Subtitle A
Child Support Enforcement, Office of	45, III
Children and Families, Administration for	45, II, III, IV, X
Community Services, Office of	45, X
Family Assistance, Office of	45, II
Federal Acquisition Regulation	48, 3
Food and Drug Administration	21, I
Health Care Financing Administration	42, IV
Human Development Services, Office of	45, XIII
Indian Health Service	25, V
Inspector General (Health Care), Office of	42, V
Public Health Service	42, I
Refugee Resettlement, Office of	45, IV
Health Care Financing Administration	42, IV
Housing and Urban Development, Department of	5, LXV; 24, Subtitle B
Community Planning and Development, Office of Assistant Secretary for	24, V, VI
Equal Opportunity, Office of Assistant Secretary for	24, I
Federal Acquisition Regulation	48, 24
Federal Housing Enterprise Oversight, Office of	12, XVII
Government National Mortgage Association	24, III
Housing—Federal Housing Commissioner, Office of Assistant Secretary for	24, II, VIII, X, XX
Inspector General, Office of	24, XII
Public and Indian Housing, Office of Assistant Secretary for	24, IX
Secretary, Office of	24, Subtitle A, VII
Housing—Federal Housing Commissioner, Office of Assistant Secretary for	24, II, VIII, X, XX
Human Development Services, Office of	45, XIII
Immigration and Naturalization Service	8, I
Independent Counsel, Office of	28, VII
Indian Affairs, Bureau of	25, I, V
Indian Affairs, Office of the Assistant Secretary	25, VI
Indian Arts and Crafts Board	25, II
Indian Health Service	25, V
Information Agency, United States	22, V
Federal Acquisition Regulation	48, 19
Information Resources Management, Office of	7, XXVII
Information Security Oversight Office, National Archives and Records Administration	32, XX
Inspector General	
Agriculture Department	7, XXVI
Health and Human Services Department	42, V
Housing and Urban Development Department	24, XII
Institute of Peace, United States	22, XVII
Inter-American Foundation	5, LXIII; 22, X
Intergovernmental Relations, Advisory Commission on	5, VII
Interior Department	
American Indians, Office of the Special Trustee	25, VII
Endangered Species Committee	50, IV
Federal Acquisition Regulation	48, 14
Federal Property Management Regulations System	41, 114
Fish and Wildlife Service, United States	50, I, IV
Geological Survey	30, IV
Indian Affairs, Bureau of	25, I, V
Indian Affairs, Office of the Assistant Secretary	25, VI
Indian Arts and Crafts Board	25, II
Land Management, Bureau of	43, II
Minerals Management Service	30, II

Agency	CFR Title, Subtitle or Chapter
Mines, Bureau of	30, VI
National Indian Gaming Commission	25, III
National Park Service	36, I
Reclamation, Bureau of	43, I
Secretary of the Interior, Office of	43, Subtitle A
Surface Mining and Reclamation Appeals, Board of	30, III
Surface Mining Reclamation and Enforcement, Office of	30, VII
Internal Revenue Service	26, I
International Boundary and Water Commission, United States and Mexico, United States Section	22, XI
International Development, Agency for	22, II
Federal Acquisition Regulation	48, 7
International Development Cooperation Agency, United States	22, XII
International Development, Agency for	22, II; 48, 7
Overseas Private Investment Corporation	5, XXXIII; 22, VII
International Fishing and Related Activities	50, III
International Investment, Office of	31, VIII
International Joint Commission, United States and Canada	22, IV
International Organizations Employees Loyalty Board	5, V
International Trade Administration	15, III; 19, III
International Trade Commission, United States	19, II
Interstate Commerce Commission	5, XL
James Madison Memorial Fellowship Foundation	45, XXIV
Japan–United States Friendship Commission	22, XVI
Joint Board for the Enrollment of Actuaries	20, VIII
Justice Department	5, XXVIII; 28, I
Drug Enforcement Administration	21, II
Federal Acquisition Regulation	48, 28
Federal Claims Collection Standards	4, II
Federal Prison Industries, Inc.	28, III
Foreign Claims Settlement Commission of the United States	45, V
Immigration and Naturalization Service	8, I
Offices of Independent Counsel	28, VI
Prisons, Bureau of	28, V
Property Management Regulations	41, 128
Labor Department	5, XLII
Benefits Review Board	20, VII
Employees' Compensation Appeals Board	20, IV
Employment and Training Administration	20, V
Employment Standards Administration	20, VI
Federal Acquisition Regulation	48, 29
Federal Contract Compliance Programs, Office of	41, 60
Federal Procurement Regulations System	41, 50
Labor-Management Standards, Office of	29, II, IV
Mine Safety and Health Administration	30, I
Occupational Safety and Health Administration	29, XVII
Pension and Welfare Benefits Administration	29, XXV
Public Contracts	41, 50
Secretary of Labor, Office of	29, Subtitle A
Veterans' Employment and Training, Office of the Assistant Secretary for	41, 61; 20, IX
Wage and Hour Division	29, V
Workers' Compensation Programs, Office of	20, I
Labor-Management Standards, Office of	29, II, IV
Land Management, Bureau of	43, II
Legal Services Corporation	45, XVI
Library of Congress	36, VII
Copyright Office	37, II
Management and Budget, Office of	5, III, LXXVII; 48, 99
Marine Mammal Commission	50, V
Maritime Administration	46, II
Merit Systems Protection Board	5, II
Micronesian Status Negotiations, Office for	32, XXVII
Mine Safety and Health Administration	30, I
Minerals Management Service	30, II

Agency	CFR Title, Subtitle or Chapter
Mines, Bureau of	30, VI
Minority Business Development Agency	15, XIV
Miscellaneous Agencies	1, IV
Monetary Offices	31, I
National Aeronautics and Space Administration	5, LIX; 14, V
Federal Acquisition Regulation	48, 18
National Agricultural Library	7, XLI
National Agricultural Statistics Service	7, XXXVI
National Archives and Records Administration	5, LXVI; 36, XII
Information Security Oversight Office	32, XX
National Bureau of Standards	15, II
National Capital Planning Commission	1, IV
National Commission for Employment Policy	1, IV
National Commission on Libraries and Information Science	45, XVII
National and Community Service, Corporation for	45, XXV
National Council on Disability	34, XII
National Credit Union Administration	12, VII
National Drug Control Policy, Office of	21, III
National Foundation on the Arts and the Humanities	45, XI
National Highway Traffic Safety Administration	23, II, III; 49, V
National Indian Gaming Commission	25, III
National Institute for Literacy	34, XI
National Institute of Standards and Technology	15, II
National Labor Relations Board	5, LXI; 29, I
National Marine Fisheries Service	50, II, IV
National Mediation Board	29, X
National Oceanic and Atmospheric Administration	15, IX; 50, II, III, IV, VI
National Park Service	36, I
National Railroad Adjustment Board	29, III
National Railroad Passenger Corporation (AMTRAK)	49, VII
National Science Foundation	5, XLIII; 45, VI
Federal Acquisition Regulation	48, 25
National Security Council	32, XXI
National Security Council and Office of Science and Technology Policy	47, II
National Telecommunications and Information Administration	15, XXIII; 47, III
National Transportation Safety Board	49, VIII
National Weather Service	15, IX
Natural Resources Conservation Service	7, VI
Navajo and Hopi Indian Relocation, Office of	25, IV
Navy Department	32, VI
Federal Acquisition Regulation	48, 52
Neighborhood Reinvestment Corporation	24, XXV
Northeast Dairy Compact Commission	7, XIII
Nuclear Regulatory Commission	5, XLVIII; 10, I
Federal Acquisition Regulation	48, 20
Occupational Safety and Health Administration	29, XVII
Occupational Safety and Health Review Commission	29, XX
Offices of Independent Counsel	28, VI
Operations Office	7, XXVIII
Overseas Private Investment Corporation	5, XXXIII; 22, VII
Panama Canal Commission	48, 35
Panama Canal Regulations	35, I
Patent and Trademark Office	37, I
Payment From a Non-Federal Source for Travel Expenses	41, 304
Payment of Expenses Connected With the Death of Certain Employees	41, 303
Peace Corps	22, III
Pennsylvania Avenue Development Corporation	36, IX
Pension and Welfare Benefits Administration	29, XXV
Pension Benefit Guaranty Corporation	29, XL
Personnel Management, Office of	5, I, XXXV; 45, VIII
Federal Acquisition Regulation	48, 17
Federal Employees Group Life Insurance Federal Acquisition Regulation	48, 21
Federal Employees Health Benefits Acquisition Regulation	48, 16

Agency	CFR Title, Subtitle or Chapter
Postal Rate Commission	5, XLVI; 39, III
Postal Service, United States	5, LX; 39, I
Postsecondary Education, Office of	34, VI
President's Commission on White House Fellowships	1, IV
Presidential Commission on the Assignment of Women in the Armed Forces	32, XXIX
Presidential Documents	3
Prisons, Bureau of	28, V
Productivity, Technology and Innovation, Assistant Secretary	37, IV
Public Contracts, Department of Labor	41, 50
Public and Indian Housing, Office of Assistant Secretary for	24, IX
Public Health Service	42, I
Railroad Retirement Board	20, II
Reclamation, Bureau of	43, I
Refugee Resettlement, Office of	45, IV
Regional Action Planning Commissions	13, V
Relocation Allowances	41, 302
Research and Special Programs Administration	49, I
Rural Business-Cooperative Service	7, XVIII, XLII
Rural Development Administration	7, XLII
Rural Housing Service	7, XVIII, XXXV
Rural Telephone Bank	7, XVI
Rural Utilities Service	7, XVII, XVIII, XLII
Saint Lawrence Seaway Development Corporation	33, IV
Science and Technology Policy, Office of	32, XXIV
Science and Technology Policy, Office of, and National Security Council	47, II
Secret Service	31, IV
Securities and Exchange Commission	17, II
Selective Service System	32, XVI
Small Business Administration	13, I
Smithsonian Institution	36, V
Social Security Administration	20, III; 48, 23
Soldiers' and Airmen's Home, United States	5, XI
Special Counsel, Office of	5, VIII
Special Education and Rehabilitative Services, Office of	34, III
State Department	22, I
Federal Acquisition Regulation	48, 6
Surface Mining and Reclamation Appeals, Board of	30, III
Surface Mining Reclamation and Enforcement, Office of	30, VII
Surface Transportation Board	49, X
Susquehanna River Basin Commission	18, VIII
Technology Administration	15, XI
Technology Policy, Assistant Secretary for	37, IV
Technology, Under Secretary for	37, V
Tennessee Valley Authority	5, LXIX; 18, XIII
Thrift Depositor Protection Oversight Board	12, XV
Thrift Supervision Office, Department of the Treasury	12, V
Trade Representative, United States, Office of	15, XX
Transportation, Department of	5, L
Coast Guard	33, I; 46, I; 49, IV
Commercial Space Transportation	14, III
Contract Appeals, Board of	48, 63
Emergency Management and Assistance	44, IV
Federal Acquisition Regulation	48, 12
Federal Aviation Administration	14, I
Federal Highway Administration	23, I, II; 49, III
Federal Railroad Administration	49, II
Federal Transit Administration	49, VI
Maritime Administration	46, II
National Highway Traffic Safety Administration	23, II, III; 49, V
Research and Special Programs Administration	49, I
Saint Lawrence Seaway Development Corporation	33, IV
Secretary of Transportation, Office of	14, II; 49, Subtitle A
Surface Transportation Board	49, X
Transportation, Office of	7, XXXIII

Agency	CFR Title, Subtitle or Chapter
Travel Allowances	41, 301
Treasury Department	5, XXI; 17, IV
Alcohol, Tobacco and Firearms, Bureau of	27, I
Community Development Financial Institutions Fund	12, XVIII
Comptroller of the Currency	12, I
Customs Service, United States	19, I
Engraving and Printing, Bureau of	31, VI
Federal Acquisition Regulation	48, 10
Federal Law Enforcement Training Center	31, VII
Fiscal Service	31, II
Foreign Assets Control, Office of	31, V
Internal Revenue Service	26, I
International Investment, Office of	31, VIII
Monetary Offices	31, I
Secret Service	31, IV
Secretary of the Treasury, Office of	31, Subtitle A
Thrift Supervision, Office of	12, V
Truman, Harry S. Scholarship Foundation	45, XVIII
United States and Canada, International Joint Commission	22, IV
United States and Mexico, International Boundary and Water Commission, United States Section	22, XI
United States Enrichment Corporation	10, XI
Utah Reclamation Mitigation and Conservation Commission	43, III
Veterans Affairs Department	38, I
Federal Acquisition Regulation	48, 8
Veterans' Employment and Training, Office of the Assistant Secretary for	41, 61; 20, IX
Vice President of the United States, Office of	32, XXVIII
Vocational and Adult Education, Office of	34, IV
Wage and Hour Division	29, V
Water Resources Council	18, VI
Workers' Compensation Programs, Office of	20, I
World Agricultural Outlook Board	7, XXXVIII

Table of OMB Control Numbers

The OMB control numbers for chapter I of title 40 were consolidated into §9.1 at 58 FR 27472, May 10, 1993, and amended at 58 FR 34199, June 23, 1993, and 58 FR 34370, June 25, 1993. Section 9.1 is reprinted below for the convenience of the user.

PART 9—OMB APPROVALS UNDER THE PAPERWORK REDUCTION ACT

AUTHORITY: 7 U.S.C. 135 *et seq.*, 136–136y; 15 U.S.C. 2001, 2003, 2005, 2006, 2601–2671; 21 U.S.C. 331j, 346a, 348; 31 U.S.C. 9701; 33 U.S.C. 1251 *et seq.*, 1311, 1313d, 1314, 1318, 1321, 1326, 1330, 1342, 1344, 1345 (d) and (e), 1361; E.O. 11735, 38 FR 21243, 3 CFR, 1971–1975 Comp. p. 973; 42 U.S.C. 241, 242b, 243, 246, 300f, 300g, 300g–1, 300g–2, 300g–3, 300g–4, 300g–5, 300g–6, 300j–1, 300j–2, 300j–3, 300j–4, 300j–9, 1857 *et seq.*, 6901–6992k, 7401–7671q, 7542, 9601–9657, 11023, 11048.

§9.1 OMB approvals under the Paperwork Reduction Act.

This part consolidates the display of control numbers assigned to collections of information in certain EPA regulations by the Office of Management and Budget (OMB) under the Paperwork Reduction Act (PRA). This part fulfills the requirements of section 3507(f) of the PRA.

40 CFR citation	OMB control No.
Public Information	
Part 2, subpart B	2050–0143
General Regulation for Assistance Programs for Other than State and Local Governments	
30.400	2030–0020
30.500	2030–0020
30.501	2030–0020
30.503	2030–0020
30.505	2030–0020
30.510	2030–0020
30.520	2030–0020
30.530	2030–0020
30.531	2030–0020
30.532	2030–0020
30.535	2030–0020
30.1002	2030–0020
30.1003	2030–0020
30.1200	2030–0020
Uniform Administrative Requirements for Grants and Cooperative Agreements to State and Local Governments	
31.10	2030–0020
31.20–31.21	2030–0020
31.31–31.32	2030–0020
31.36(g)–31.36(h)	2030–0020
31.40	2030–0020
31.42	2030–0020
31.6	2030–0020
Procurement Under Assistance Agreements	
33.110	2030–0003
33.211	2030–0003
State and Local Assistance	
35.2015	2040–0027
35.2025	2040–0027
35.2034	2040–0027
35.2040	2040–0027
35.2105–35.2107	2040–0027
35.2110	2040–0027
35.2114	2040–0027
35.2118	2040–0027
35.2120	2040–0027
35.2127	2040–0027
35.2130	2040–0027
35.2140	2040–0027
35.2211–35.2212	2040–0027
35.2215–35.2216	2040–0027
35.2218	2040–0027
35.3010	2040–0095
35.3030	2040–0095
35.3130	2040–0118
35.3135	2040–0118
35.3140	2040–0118
35.3145	2040–0118
35.3150	2040–0118
35.3155	2040–0118
35.3160	2040–0118
35.3165	2040–0118
35.3170	2040–0118
35.6055(a)(2)	2010–0020
35.6055(b)(1)	2010–0020
35.6055(b)(2)(i)–(ii)	2010–0020
35.6105(a)(2)(i)–(v), (vii)	2010–0020
35.6110(b)(2)	2010–0020
35.6120	2010–0020
35.6145	2010–0020
35.6155(a), (c)	2010–0020
35.6230(a), (c)	2010–0020
35.6300(a)(3)	2010–0020
35.6315(c)	2010–0020
35.6320	2010–0020
35.6340(a)	2010–0020
35.6350	2010–0020

40 CFR citation	OMB control No.
35.6500	2010–0020
35.6550(a)(1)(ii)	2010–0020
35.6550(b)(1)(iii)	2010–0020
35.6550(b)(2)(i)	2010–0020
35.6585	2010–0020
35.6595(a)	2010–0020
35.6600(a)	2010–0020
35.6650	2010–0020
35.6655	2010–0020
35.6660	2010–0020
35.6665(a)	2010–0020
35.6700	2010–0020
35.6705	2010–0020
35.6710	2010–0020
35.6805	2010–0020
35.6815 (a), (d), (e)	2010–0020
35.9000–35.9070	2040–0138
Requirements for Preparation, Adoption, and Submittal of Implementation Plans	
51.160–51.166	2060–0003
51.321–51.323	2060–0088
51.353–51.354	2060–0252
51.365–51.366	2060–0252
51.370–51.371	2060–0252
51.850–51.860	2060–0279
Approval and Promulgation of Implementation Plans	
52.21	2060–0003
52.741	2060–0203
Outer Continental Shelf Air Regulations	
55.4–55.8	2060–0249
55.11–55.14	2060–0249
Ambient Air Quality Surveillance	
58.11–58.14	2060–0084
58.20–58.23	2060–0084
58.25–58.28	2060–0084
58.30–58.31	2060–0084
58.33	2060–0084
58.35	2060–0084
58.40–58.41	2060–0084
58.43	2060–0084
58.45	2060–0084
58.50	2060–0084
Standards of Performance for New Stationary Sources [1]	
60.7(d)	2060–0207
60.45–60.47	2060–0026
60.46a–60.49a	2060–0023
60.40b	2060–0072
60.42b	2060–0072
60.44b–60.49b	2060–0072
60.42c	2060–0202
60.44c–60.48c	2060–0202
60.53–60.54	2060–0040
60.50a	2060–0210
60.56a–60.59a	2060–0210
60.63–60.65	2060–0025
60.73–60.74	2060–0019
60.84–60.85	2060–0041
60.93	2060–0083
60.104–60.108	2060–0022
60.113a–60.115a	2060–0121
60.113b–60.116b	2060–0074
60.123	2060–0080
60.133	2060–0110
60.142–60.144	2060–0029
60.143a–60.145a	2060–0029
60.153–60.155	2060–0035
60.192(b)	2060–0031
60.194–60.195	2060–0031
60.203–60.204	2060–0037
60.213–60.214	2060–0037
60.223–60.224	2060–0037
60.233–60.234	2060–0037
60.243–60.244	2060–0037
60.253–60.254	2060–0122
60.273–60.276	2060–0038
60.273a–60.276a	2060–0038
60.284–60.286	2060–0021
60.292–60.293	2060–0054
60.296	2060–0054
60.303	2060–0082
60.310	2060–0106
60.313–60.316	2060–0106
60.334–60.335	2060–0028
60.343–60.344	2060–0063
60.373–60.374	2060–0081
60.384–60.386	2060–0016
60.393–60.396	2060–0034
60.398	2060–0034
60.403–60.404	2060–0111
60.433–60.435	2060–0105
60.443–60.447	2060–0004
60.453–60.456	2060–0108
60.463–60.466	2060–0107
60.473–60.474	2060–0002
60.482–2	2060–0012
60.482–3	2060–0012
60.482–4	2060–0012
60.482–7	2060–0012
60.482–8	2060–0012
60.482–10	2060–0012
60.483–1	2060–0012
60.483–2	2060–0012
60.484–60.487	2060–0012
60.493–60.496	2060–0001
60.502–60.503	2060–0006
60.505	2060–0006
60.530–60.536	2060–0161
60.537 (a)(1)–(2), (a)(4)–(5), (b)–(i)	2060–0161
60.538–60.539	2060–0161
60.543 (b)(2)–(4), (c)–(n)	2060–0156
60.544	2060–0156
60.545 (a)–(d), (f)	2060–0156
60.546 (a)–(e), (f)(4)–(6), (g)–(j)	2060–0156
60.547	2060–0156
60.562–1	2060–0145
60.562–2	2060–0145
60.563–60.565	2060–0145
60.580	2060–0073
60.583–60.585	2060–0073
60.592–60.593	2060–0067
60.603–60.604	2060–0059
60.613–60.615	2060–0197
60.622	2060–0079
60.624–60.625	2060–0079
60.632–60.636	2060–0120
60.640	2060–0120
60.642–60.644	2060–0120
60.646–60.647	2060–0120
60.663–60.665	2060–0197
60.670	2060–0050
60.672	2060–0050
60.674–60.676	2060–0050
60.683–60.685	2060–0114
60.692–1	2060–0172
60.692–2	2060–0172
60.692–3	2060–0172

40 CFR citation	OMB control No.
60.692–4	2060–0172
60.692–5	2060–0172
60.693–1	2060–0172
60.693–2	2060–0172
60.695–60.698	2060–0172
60.703–60.705	2060–0269
60.710	2060–0171
60.713–60.717	2060–0171
60.722–60.725	2060–0162
60.734–60.736	2060–0251
60.740	2060–0181
60.743–60.747	2060–0181
National Emission Standards for Hazardous Air Pollutants [2]	
61.24–61.25	2060–0191
61.32–61.34	2060–0092
61.53–61.55	2060–0097
61.65(b)–(d)	2060–0071
61.67–61.71	2060–0071
61.93–61.95	2060–0191
61.103–61.105	2060–0191
61.107	2060–0191
61.123–61.124	2060–0191
61.126	2060–0191
61.132–61.133	2060–0185
61.135–61.139	2060–0185
61.142	2060–0101
61.144–61.147	2060–0101
61.149	2060–0101
61.150–61.155	2060–0101
61.163–61.165	2060–0043
61.203	2060–0191
61.206–61.209	2060–0191
61.223–61.224	2060–0191
61.242–1	2060–0068
61.242–2	2060–0068
61.242–3	2060–0068
61.242–4	2060–0068
61.242–7	2060–0068
61.242–8	2060–0068
61.242–10	2060–0068
61.242–11	2060–0068
61.243–1	2060–0068
61.243–2	2060–0068
61.244–61.247	2060–0068
61.253–61.255	2060–0191
61.271–61.276	2060–0185
61.300	2060–0182
61.302–61.305	2060–0182
61.342	2060–0183
61.344–61.349	2060–0183
61.354–61.357	2060–0183
National Emission Standards for Hazardous Air Pollutants for Source Categories [3]	
63.5(d)	2060–0330
63.52–63.56	2060–0266
63.72	2060–0222
63.74–63.79	2060–0222
63.91–63.96	2060–0264
63.103	2060–0282
63.105	2060–0282
63.117–63.118	2060–0282
63.122–63.123	2060–0282
63.129–63.130	2060–0282
63.146–63.148	2060–0282
63.151–63.152	2060–0282
63.181–63.182	2060–0282
63.302–63.311	2060–0253
63.322–63.325	2060–0234
63.345–63.347	2060–0327
63.363–63.367	2060–0283
63.403–63.406	2060–0268
63.420	2060–0325
63.422–63.428	2060–0325
63.467–63.468	2060–0273
63.525–63.528	2060–0290
63.548–63.550	2060–0296
63.563–63.567	2060–0289
63.653	2060–0340
63.654	2060–0340
63.703–63.707	2060–0326
63.752–63.753	2060–0341
63.787 (a)–(b)	2060–0330
63.788 (a)–(c)	2060–0330
63.806–63.807	2060–0324
63.829–63.830	2060–0335
63.1311	2060–0351
63.1314	2060–0351
63.1315	2060–0351
63.1319	2060–0351
63.1320	2060–0351
63.1325–63.1332	2060–0351
63.1335	2060–0351
Chemical Accident Prevention Provisions	
68.120 (a), (e), and (g)	2050–0127
State Operating Permit Programs	
70.3–70.11	2060–0243
Federal Operating Permit Programs	
71.5	2060–0336
71.6(a),(c),(d),(g)	2060–0336
71.7	2060–0336
71.9(e)–(j)	2060–0336
71.24–71.26	2060–0276
Permits Regulation	
72.7–72.10	2060–0258
72.20–72.25	2060–0258
72.30–72.33	2060–0258
72.40–72.44	2060–0258
72.50–72.51	2060–0258
72.60–72.69	2060–0258
72.70–72.74	2060–0258
72.80–72.85	2060–0258
72.90–72.96	2060–0258
Allowance System	
73.10–73.13	2060–0261
73.16	2060–0261
73.18–73.21	2060–0261
73.30–73.38	2060–0258
73.50–73.53	2060–0258
73.70–73.77	2060–0221
73.80–73.86	2060–0258
73.90	2060–0258
Sulfur Dioxide Opt-ins	
74.12	2060–0258
74.14	2060–0258
74.16	2060–0258
74.18	2060–0258
74.20	2060–0258
74.22	2060–0258
74.24–74.25	2060–0258
74.41	2060–0258

40 CFR citation	OMB control No.
74.43–74.44	2060–0258
74.46–74.47	2060–0258
74.60–74.64	2060–0258
Continuous Emission Monitoring	
75.4–75.5	2060–0258
75.10–75.18	2060–0258
75.20–75.24	2060–0258
75.30–75.34	2060–0258
75.40–75.48	2060–0258
75.50–75.52	2060–0258
75.53–75.56	2060–0258
75.60–75.67	2060–0258
Nitrogen Oxides Emission Reduction Program	
76.8–76.15	2060–0258
Excess Emissions	
77.3–77.6	2060–0258
Appeal Procedures for Acid Rain Program	
78.1–78.20	2060–0258
Registration of Fuels and Fuel Additives	
79.10–79.11	2060–0150
79.20–79.21	2060–0150
79.31–79.33	2060–0150
79.51(a), (c), (d), (g), (h)	2060–0150
79.52	2060–0150
79.57(a)(5)	2060–0150
79.57(f)(5)	2060–0150
79.58(e)	2060–0150
79.59(b)–(d)	2060–0150
79.60	2060–0150
79.61(e)	2060–0150
79.62–79.68	2060–0297
Regulation of Fuels and Fuel Additives	
80.20	2060–0066
80.25	2060–0066
80.27	2060–0178
80.29(c)	2060–0308
80.141(c)–(f)	2060–0275
80.157	2060–0275
80.158	2060–0275
80.160	2060–0275
80.161	2060–0275
80.162	2060–0275
80.163(d)(3)	2060–0275
80.164	2060–0275
80.165	2060–0275
80.166	2060–0275
80.167(d)	2060–0275
80.170	2060–0275
80.171	2060–0275
80.173	2060–0275
Protection of Stratospheric Ozone	
82.9–82.13	2060–0170
82.21	2060–0170
82.36	2060–0247
82.38	2060–0247
82.40	2060–0247
82.42	2060–0247
82.122	2060–0259
82.156	2060–0256
82.160–82.162	2060–0256
82.164	2060–0256
82.166	2060–0256
82.176(a)	2060–0226
82.176(c)(3)	2060–0226
82.178	2060–0226
82.180	2060–0350
82.180(a)(5)	2060–0226
82.180(b)(3)	2060–0226
82.184(c)	2060–0226
82.184(e)	2060–0226
Control of Air Pollution From Motor Vehicles and Motor Vehicle Engines	
85.503	2060–0104
85.505	2060–0104
85.1503–85.1507	2060–0095
85.1509–85.1510	2060–0095
85.1511(b)–(d), (f)	2060–0095
85.1511(b)(3)	2060–0007
85.1512	2060–0095
85.1514–85.1515	2060–0095
85.1703	2060–0124
85.1705–85.1706	2060–0007
85.1901–85.1909	2060–0048
85.2112–85.2123	2060–0065
85.2114	2060–0016
85.2115	2060–0016
Control of Air Pollution From New and In-Use Motor Vehicles and New and In-Use Motor Vehicle Engines: Certification and Test Procedures	
86.079–31–86.079–33	2060–0104
86.079–36	2060–0104
86.079–39	2060–0104
86.080–12	2060–0104
86.082–34	2060–0104
86.085–13	2060–0104
86.085–37	2060–0104
86.087–38	2060–0104
86.090–14	2060–0104
86.090–21	2060–0104
86.090–25	2060–0104
86.090–26	2060–0104
86.090–27	2060–0104
86.091–7	2060–0104
86.091–15	2060–0104
86.091–21	2060–0104
86.091–23	2060–0104
86.091–28	2060–0104
86.091–30	2060–0104
86.092–14	2060–0104
86.092–15	2060–0104
86.092–23	2060–0104
86.092–24	2060–0104
86.092–26	2060–0104
86.092–35	2060–0104
86.094–7–86.094–9	2060–0104
86.094–15–86.094–16	2060–0104
86.094–17	2060–0104
86.094–18	2060–0104
86.094–21	2060–0104
86.094–23	2060–0104
86.094–24(a)(3)(iii)	2060–0314
86.094–25	2060–0104
86.094–30	2060–0104
86.094–35	2060–0104
86.095–14	2060–0104
86.095–23	2060–0104
86.095–24	2060–0104
86.095–26	2060–0104
86.095–30	2060–0104

40 CFR citation	OMB control No.
86.095–35	2060–0104
86.094–38	2060–0104
86.096–7	2060–0104
86.096–8	2060–0104
86.096–9	2060–0104
86.096–10	2060–0104
86.096–14	2060–0104
86.096–21	2060–0104
86.096–23	2060–0104
86.096–24	2060–0104
86.096–26	2060–0104
86.096–30	2060–0104
86.096–35	2060–0104
86.097–9	2060–0104
86.098–23	2060–0104
86.098–28	2060–0104
86.099–8	2060–0104
86.099–9	2060–0104
86.099–10	2060–0104
86.111–94	2060–0104
86.113–82	2060–0104
86.113–87	2060–0104
86.113–90	2060–0104
86.113–91	2060–0104
86.113–94	2060–0104
86.135–82	2060–0104
86.135–90	2060–0104
86.135–94	2060–0104
86.142–90	2060–0104
86.144–90	2060–0104
86.144–94	2060–0104
86.150–98	2060–0104
86.336–79	2060–0104
86.337–79	2060–0104
86.412–78	2060–0104
86.414–78	2060–0104
86.415–78	2060–0104
86.416–80	2060–0104
86.421–78	2060–0104
86.423–78	2060–0104
86.427–78	2060–0104
86.428–80	2060–0104
86.429–78	2060–0104
86.431–78	2060–0104
86.432–78	2060–0104
86.434–78	2060–0104
86.435–78	2060–0104
86.436–78	2060–0104
86.437–78	2060–0104
86.438–78	2060–0104
86.439–78	2060–0104
86.440–78	2060–0104
86.513–94	2060–0104
86.537–90	2060–0104
86.542–90	2060–0104
86.603–88	2060–0064
86.604–84	2060–0064
86.605–88	2060–0064
86.606–84	2060–0064
86.607–84	2060–0064
86.608–88	2060–0064
86.608–90	2060–0064
86.608–96	2060–0104
86.609–84	2060–0064
86.609–96	2060–0104
86.612–84	2060–0064
86.614–84	2060–0064
86.615–84	2060–0064
86.709–94	2060–0104
86.709–99	2060–0104
86.884–5	2060–0104
86.884–7	2060–0104
86.884–9	2060–0104
86.884–10	2060–0104
86.884–12	2060–0104
86.884–13	2060–0104
86.1003–90	2060–0064
86.1004–84	2060–0064
86.1005–90	2060–0064
86.1006–84	2060–0064
86.1007–84	2060–0064
86.1008–90	2060–0064
86.1008–96	2060–0104
86.1009–84	2060–0064
86.1009–96	2060–0104
86.1012–84	2060–0064
86.1014–84	2060–0064
86.1015–87	2060–0064
86.1106–87	2060–0132
86.1108–87	2060–0132
86.1110–87	2060–0132
86.1111–87	2060–0104
86.1112–87–86.1115–87	2060–0132
86.1213–85	2060–0104
86.1213–87	2060–0104
86.1242–85	2060–0104
86.1242–90	2060–0104
86.1308–84	2060–0104
86.1310–90	2060–0104
86.1311–94	2060–0104
86.1313–84	2060–0104
86.1313–87	2060–0104
86.1313–90	2060–0104
86.1313–91	2060–0104
86.1313–94	2060–0104
86.1314–84	2060–0104
86.1316–84	2060–0104
86.1316–90	2060–0104
86.1319–84	2060–0104
86.1319–90	2060–0104
86.1321–84	2060–0104
86.1321–90	2060–0104
86.1323–84	2060–0104
86.1327–84	2060–0104
86.1327–88	2060–0104
86.1327–90	2060–0104
86.1332–84	2060–0104
86.1332–90	2060–0104
86.1334–84	2060–0104
86.1335–90	2060–0104
86.1336–84	2060–0104
86.1340–84	2060–0104
86.1340–90	2060–0104
86.1341–90	2060–0104
86.1342–90	2060–0104
86.1344–94	2060–0104
86.1413	2060–0104
86.1427	2060–0104
86.1432	2060–0104
86.1434	2060–0104
86.1437	2060–0104
86.1442	2060–0104
86.1542–84	2060–0104
86.1544–84	2060–0104
86.2500	2060–0104
Clean–Fuel Vehicles	
88.104–94 (a), (c), (e), (f), (g), (h), (i), (j), (k)	2060–0104
88.105–94	2060–0104
88.204–94(b)(1)	2060–0314
88.204–94(c)	2060–0314
88.305–94	2060–0104
88.306–94(a), (b) introductory text	2060–0104
88.306–94(b)(1)	2060–0314
88.306–94(b)(2)	2060–0314

40 CFR citation	OMB control No.
88.306–94(b)(4)	2060–0314
88.306–94(c)	2060–0314
88.306–94(f)	2060–0314
Control of Emissions From New and In-Use Nonroad Engines	
89.1	2060–0124
89.2	2060–0124
89.114–96–89.120–96	2060–0287
89.122–96–89.127–96	2060–0287
89.129–96	2060–0287
89.203–96–89.207–96	2060–0287
89.209–96–89.211–96	2060–0287
89.304–96–89.331–96	2060–0287
89.404–96–89.424–96	2060–0287
89.505–89.905	2060–0064
89.511	2060–0064
89.512	2060–0064
89.603–89.605	2060–0095
89.607–89.610	2060–0095
89.611	2060–0007, 2060–0095
89.612	2060–0095
89.801	2060–0048
89.803	2060–0048
89.903	2060–0048
89.905	2060–0007
89.906	2060–0007
Control of Emissions From New and In-use Nonroad Engines	
90.107–90.108	2060–0338
90.113	2060–0338
90.115–90.124	2060–0338
90.126	2060–0338
90.304–90.329	2060–0338
90.404–90.427	2060–0338
90.505–90.509	2060–0295
90.511–90.512	2060–0295
90.604	2060–0294
90.611–90.613	2060–0294
90.800	2060–0048
90.802–90.804	2060–0048
90.806	2060–0048
90.903	2060–0124
90.905–90.906	2060–0007
Determining Conformity of Federal Actions to State or Federal Implementation Plans	
93.150–93.160	2060–0279
Mandatory Patent Licenses	
95.2	2060–0307
Oil Pollution Prevention	
112.1–112.7	2050–0021
Oil Pollution Prevention; Non-Transportation-Related Onshore Facilities	
112.20	2050–0135
Designation, Reportable Quantities, and Notification for Hazardous Substances	
116.4	2050–0046
117.3	2050–0046
117.21	2050–0046

40 CFR citation	OMB control No.
EPA Administered Permit Programs: The National Pollutant Discharge Elimination System	
122.21(f)–(l)	2040–0086, 2040–0170
122.21(j)(4)	2040–0150
122.21(m)–(p)	2040–0068, 2040–0170
122.26(c), (d)	2040–0086
122.41(h)	2040–0068, 2040–0170
122.41(j)	2040–0009, 2040–0110, 2040–0170
122.41(l)	2040–0110, 2040–0068, 2040–0170
122.42(c)	2040–0086
122.42(a), (b), (l)	2040–0068, 2040–0170
122.44(g), (i)	2040–0004, 2040–0170
122.44(r)	2040–0180
122.45(b)	2040–0004, 2040–0110
122.45(b)(4)	2040–0068
122.47(a)	2040–0110, 2040–0170
122.47(b)	2040–0110, 2040–0068, 2040–0170
122.48	2040–0004, 2040–0170
122.62(a)	2040–0068, 2040–0170
122.63	2040–0068, 2040–0170
State Permit Requirements	
123.21–123.24	2040–0057, 2040–0170
123.25	2040–0004, 2040–0110, 2040–0170, 2040–0180
123.26–123.29	2040–0057, 2040–0170
123.43	2040–0057, 2040–0170
123.44	2040–0057, 2040–0170, 2040–0180
123.45	2040–0057, 2040–0170
123.62	2040–0057, 2040–0170, 2040–0180
123.63	2040–0057, 2040–0170, 2040–0180
123.64	2040–0057, 2040–0170
Procedures for Decisionmaking	
124.5	2040–0068
124.31	2050–0149
124.32	2050–0149
124.33	2050–0149
124.53–124.54	2040–0057

40 CFR citation	OMB control No.
Criteria and Standards for the National Pollutant Discharge Elimination System	
125.59–125.67, and Appendix A and B	2040–0088
Water Quality Planning and Management	
130.6–130.10	2040–0071
130.15	2040–0071
Water Quality Standards Regulation	
131.1	2040–0180
131.5	2040–0180
131.6–131.8	2040–0049
131.20	2040–0049
131.21	2040–0049, 2040–0180
131.22	2040–0049
131.31–131.36	2040–0049
Water Quality Guidance for the Great Lakes System	
132.1	2040–0180
132.2	2040–0180
132.3	2040–0180
132.4	2040–0180
132.5	2040–0180
Part 132, Appendix A	2040–0180
Part 132, Appendix B	2040–0180
Part 132, Appendix C	2040–0180
Part 132, Appendix D	2040–0180
Part 132, Appendix E	2040–0180
Part 132, Appendix F	2040–0180
National Primary Drinking Water Regulations	
141.2	2040–0090
141.4	2040–0090
141.11–141.15	2040–0090
141.21–141.22	2040–0090
141.23–141.24	2040–0090
141.25–141.30	2040–0090
141.31–141.32	2040–0090
141.33–141.35	2040–0090
141.40	2040–0090
141.41–141.43	2040–0090
141.50–141.52	2040–0090
141.60–141.63	2040–0090
141.70–141.75	2040–0090
141.80–141.91	2040–0090
141.100	2040–0090
141.110–141.111	2040–0090
141.140–141.144	2040–0183
National Primary Drinking Water Regulations Implementation	
142.2–142.3	2040–0090
142.10–142.15	2040–0090
142.16	2060–0090
142.17–142.24	2040–0090
142.56–142.57	2040–0090
142.60–142.61	2040–0090
142.62	2040–0090
142.63–142.64	2040–0090
142.70–142.78	2040–0090
142.81–142.81	2040–0090
Underground Injection Control Program	
144.8	2040–0042
144.12	2040–0042
144.14–144.15	2040–0042
144.23	2040–0042
144.25–144.28	2040–0042
144.31–144.33	2040–0042
144.38	2040–0042
144.41	2040–0042
144.51–144.55	2040–0042
144.62–144.66	2040–0042
144.70	2040–0042
Underground Injection Control Program: Criteria and Standards	
146.10	2040–0042
146.12–146.15	2040–0042
146.22–146.25	2040–0042
146.32–146.35	2040–0042
146.52	2040–0042
146.64	2040–0042
146.66–146.73	2040–0042
State Underground Injection Control Programs	
147.104	2040–0042
147.304–147.305	2040–0042
147.504	2040–0042
147.754	2040–0042
147.904	2040–0042
147.1154	2040–0042
147.1354–147.1355	2040–0042
147.1454	2040–0042
147.1654	2040–0042
147.1954	2040–0042
147.2103–147.2104	2040–0042
147.2154	2040–0042
147.2402	2040–0042
147.2905	2040–0042
147.2912–147.2913	2040–0042
147.2915	2040–0042
147.2918	2040–0042
147.2920–147.2926	2040–0042
147.2929	2040–0042
147.3002–147.3003	2040–0042
147.3006–147.3007	2040–0042
147.3011	2040–0042
147.3014–147.3016	2040–0042
147.3101	2040–0042
147.3104–147.3105	2040–0042
147.3107–147.3109	2040–0042
Hazardous Waste Injection Restrictions	
148.5	2040–0042
148.20–148.23	2040–0042
Pesticide Registration and Classification Procedures	
152.46	2070–0060
152.50	2070–0024, 2070–0040, 2070–0060
152.80	2070–0040, 2070–0060
152.85	2070–0040, 2070–0060
152.98	2070–0060
152.122	2070–0060
152.132	2070–0044
152.135	2070–0060
152.164	2070–0060
152.404	2070–0040, 2070–0060
152.406	2070–0040, 2070–0060

40 CFR citation	OMB control No.
152.412	2070–0040, 2070–0060
152.414	2070–0040, 2070–0060
Registration Standards	
155.30	2070–0057
Labeling Requirements for Pesticides and Devices	
156.36	2070–0052
156.206	2070–0060
156.208	2070–0060
156.210	2070–0060
156.212	2070–0060
Packaging Requirements for Pesticides and Devices	
157.22	2070–0052
157.24	2070–0052
157.34	2070–0052
157.36	2070–0052
Data Requirements for Registration	
158.30	2070–0040, 2070–0057, 2070–0060, 2070–0107
158.32	2070–0040, 2070–0053, 2070–0057, 2070–0060, 2070–0107
158.34	2070–0040, 2070–0057, 2070–0060, 2070–0107
158.45	2070–0040, 2070–0057, 2070–0060, 2070–0107
158.75	2070–0040, 2070–0057, 2070–0060, 2070–0107
158.101	2070–0040, 2070–0057, 2070–0060, 2070–0107
158.155	2070–0040, 2070–0057, 2070–0060, 2070–0107
158.160	2070–0040, 2070–0057, 2070–0060, 2070–0107
158.162	2070–0040, 2070–0057, 2070–0060, 2070–0107
158.165	2070–0040, 2070–0057, 2070–0060, 2070–0107
158.167	2070–0040, 2070–0057, 2070–0060, 2070–0107
158.170	2070–0040, 2070–0057, 2070–0060, 2070–0107
158.175	2070–0040, 2070–0057, 2070–0060, 2070–0107
158.180	2070–0040, 2070–0057, 2070–0060, 2070–0107
158.190	2070–0040, 2070–0057, 2070–0060, 2070–0107
158.240	2070–0057, 2070–0060, 2070–0107
158.290	2070–0057, 2070–0060, 2070–0107
158.340	2070–0057, 2070–0060, 2070–0107
158.390	2070–0057, 2070–0060, 2070–0107
158.440	2070–0057, 2070–0060, 2070–0107
158.490	2070–0057, 2070–0060, 2070–0107
158.540	2070–0057, 2070–0060, 2070–0107
158.590	2070–0057, 2070–0060, 2070–0107
158.640	2070–0057, 2070–0060, 2070–0107
158.690	2070–0057, 2070–0060, 2070–0107
158.740	2070–0057, 2070–0060, 2070–0107
Good Laboratory Practice Standards	
Part 160	2070–0024, 2070–0032, 2070–0040, 2070–0055, 2070–0057, 2070–0060, 2070–0107
State Registration of Pesticide Products	
162.153	2070–0055
Certification of Usefulness of Pesticide Chemicals	
163.4	2070–0060, 2070–0024
163.5	2070–0060, 2070–0024

40 CFR citation	OMB control No.
Exemption of Federal and State Agencies for Use of Pesticides Under Emergency Conditions	
166.20	2070–0032
166.32	2070–0032
166.43	2070–0032
166.50	2070–0032
Registration of Pesticide and Active Ingredient Producing Establishments, Submission of Pesticide Reports	
Part 167	2070–0078
Statements of Enforcement Policies and Interpretations	
168.65	2070–0027
168.75	2070–0027
168.85	2070–0027, 2070–0028,, 2070–0078
Books and Records of Pesticide Production and Distribution	
169.2	2070–0028
Worker Protection Standards for Agricultural Pesticides	
Part 170	2070–0148
Certification of Pesticide Applicators	
171.7	2070–0029
171.8	2070–0029
171.9	2070–0029
171.10	2070–0029
171.11	2070–0029
Experimental Use Permits	
172.4	2070–0040
172.8	2070–0040
Issuance of Food Additive Regulations	
177.81	2070–0024
177.92	2070–0024
177.98	2070–0024
177.99	2070–0024
177.102	2070–0024
177.105	2070–0024
177.110	2070–0024
177.116	2070–0024
Tolerances and Exemptions from Tolerances for Pesticide Chemicals in or on Raw Agricultural Commodities	
180.7	2070–0024
180.8	2070–0024
180.9	2070–0024
180.31	2070–0024
180.32	2070–0024
180.33	2070–0024
404 State Program Regulations	
233.10–233.12	2040–0168
233.21	2040–0168
233.30	2040–0168
233.50	2040–0168
233.52	2040–0168
233.61	2040–0140

40 CFR citation	OMB control No.
Criteria for Classification of Solid Waste Disposal Facilities and Practices	
257.24	2050–0154
257.25	2050–0154
257.27	2050–0154
Criteria for Municipal Solid Waste Landfills	
Part 258	2050–0122
258.10–258.16	2050–0122
258.20	2050–0122
258.23	2050–0122
258.28–258.29	2050–0122
258.51	2050–0122
258.53–258.55	2050–0122
258.57–258.58	2050–0122
258.60–258.61	2050–0122
258.71–258.74	2050–0122
Hazardous Waste Management System: General	
260.20–260.22	2050–0053
260.23	2050–0145
260.31–260.33	2050–0053
Identification and Listing of Hazardous Waste	
261.3	2050–0085
261.4	2050–0053
261.35	2050–0115
Standards Applicable to Generators of Hazardous Waste	
262.12	2050–0028
262.20	2050–0039
262.22–262.23	2050–0039
262.34	2050–0035, 2050–0085
262.40(a)	2050–0039
262.40(b)	2050–0024
262.40(c)	2050–0035
262.41	2050–0024
262.42	2050–0039
262.43	2050–0035
262.44(a)–(b)	2050–0039
262.44(c)	2050–0035
262.53–262.57	2050–0035
262.60	2050–0035
Standards Applicable to Transporters of Hazardous Waste	
263.11	2050–0028
263.20–263.22	2050–0039
263.30	2050–0039
Standards for Owners and Operators of Hazardous Waste Treatment, Storage, and Disposal Facilities	
264.11	2050–0028
264.12 (a)	2050–0120
264.13	2050–0120, 2050–0009
264.14	2050–0009
264.15	2050–0120, 2050–0009
264.16	2050–0120, 2050–0009
264.17	2050–0120
264.18	2050–0009
264.19	2050–0009
264.32	2050–0009
264.35	2050–0009

40 CFR citation	OMB control No.
264.37	2050–0120
264.51	2050–0009
264.52	2050–0009
264.53	2050–0120
264.54	2050–0120
264.56	2050–0120
264.71	2050–0039
264.72	2050–0039
264.73	2050–0120
264.74	2050–0120
264.75	2050–0024
264.76	2050–0039
264.90	2050–0009
264.96	2050–0120
264.97 (g)	2050–0120
264.97 (h)	2050–0009
264.97 (j)	2050–0120
264.98 (c), (g)(1), (g)(5), (g)(6)	2050–0033
264.98 (g)(4), (h)	2050–0009
264.99 (c), (g), (h)(1), (i)(1), (i)(2)	2050–0033
264.99 (h)(2), (i)(3), (j)	2050–0009
264.100 (e), (f), (g)	2050–0033
264.100 (h)	2050–0009
264.101	2050–0120
264.112 (a), (b), (c)	2050–0009
264.112 (d)	2050–0120
264.113 (a), (b), (d)	2050–0120
264.113 (e)	2050–0050
264.115	2050–0120
264.116	2050–0120
264.118	2050–0009
264.119 (a), (b)	2050–0120
264.119 (c)	2050–0009
264.120	2050–0120
264.142 (a)	2050–0009
264.142 (b), (c), (d)	2050–0120
264.143	2050–0120
264.144 (a)	2050–0009
264.144 (b), (c), (d)	2050–0120
264.145	2050–0120
264.147 (a)(7), (b)(7), (f),(g)	2050–0120
264.147 (a)(1), (b)(1), (c), (f), (g), (h), (i), (j)	2050–0009
264.148	2050–0120
264.149	2050–0009
264.150	2050–0009
264.190	2050–0050
264.191	2050–0050
264.192 (a)	2050–0009
264.192 (g)	2050–0050
264.193 (c), (d), (e), (g), (h)	2050–0009
264.193 (i)	2050–0050
264.196	2050–0050
264.197 (b)	2050–0050
264.197 (c)	2050–0009
264.221	2050–0009
264.222 (a)	2050–0009
264.222 (b)	2050–0050
264.223 (a)	2050–0009
264.223 (b), (c)	2050–0050
264.226 (c)	2050–0050, 2050–0009
264.226 (d)	2050–0050
264.227	2050–0050
264.231	2050–0009
264.251	2050–0009
264.252 (a)	2050–0009
264.252 (b)	2050–0050
264.253 (a)	2050–0009
264.253 (b), (c)	2050–0050
264.254	2050–0050
264.259	2050–0009
264.271	2050–0009
264.272	2050–0009
264.276	2050–0050, 2050–0009
264.278 (a)–(f), (h)	2050–0050
264.278 (g)	2050–0050, 2050–0009
264.280	2050–0050
264.283	2050–0009
264.301	2050–0009
264.302 (a)	2050–0009
264.302 (b)	2050–0050
264.303 (a)	2050–0009
264.303 (b)	2050–0050
264.304 (a)	2050–0009
264.304 (b), (c)	2050–0050
264.314	2050–0050
264.317	2050–0009
264.340	2050–0009
264.343	2050–0050
264.344	2050–0009
264.347	2050–0050
264.552	2050–0009
264.570	2050–0050
264.571	2050–0050
264.573	2050–0050
264.574	2050–0050
264.575	2050–0009
264.603	2050–0050
264.1033 (a)	2050–0009
264.1033 (j)	2050–0050
264.1034	2050–0050
264.1035	2050–0050
264.1036	2050–0050
264.1061	2050–0050
264.1062	2050–0050
264.1063	2050–0050
264.1064	2050–0050, 2050–0009
264.1065	2050–0050
264.1089	2060–0318
264.1090	2060–0318
264.1100	2050–0050
264.1101	2050–0050

Interim Status Standards for Owners and Operators of Hazardous Waste Treatment, Storage, and Disposal Facilities

265.11	2050–0028
265.12 (a)	2050–0120
265.13	2050–0120
265.15	2050–0120
265.16	2050–0120
265.19	2050–0120
265.37	2050–0120
265.51	2050–0120
265.52	2050–0120
265.53	2050–0120
265.54	2050–0120
265.56	2050–0120
265.71	2050–0039
265.72	2050–0039
265.73	2050–0120
265.75	2050–0024
265.76	2050–0039
265.90	2050–0033
265.92	2050–0033
265.93	2050–0033
265.94	2050–0033
265.112	2050–0120
265.113 (a), (b), (d)	2050–0120
265.113 (e)	2050–0050
265.115	2050–0120
265.116	2050–0120

40 CFR citation	OMB control No.
265.118	2050–0120
265.119	2050–0120
265.120	2050–0120
265.142	2050–0120
265.143	2050–0120
265.144	2050–0120
265.145	2050–0120
265.147	2050–0120
265.148	2050–0120
265.149	2050–0120
265.150	2050–0120
265.190	2050–0035, 2050–0050
265.191	2050–0035, 2050–0050
265.192	2050–0035, 2050–0050
265.193	2050–0035, 2050–0050
265.195	2050–0120
265.196	2050–0035, 2050–0050
265.197 (b)	2050–0050
265.197 (c)	2050–0120
265.221	2050–0050
265.222	2050–0050
265.223	2050–0050
265.225	2050–0050
265.226	2050–0050
265.229	2050–0050
265.254	2050–0050
265.255	2050–0050
265.259	2050–0050
265.260	2050–0050
265.273	2050–0120
265.276	2050–0050
265.278	2050–0050
265.280	2050–0050
265.301	2050–0050
265.302	2050–0050
265.303	2050–0050
265.304	2050–0050
265.314	2050–0050
265.340	2050–0050
265.352	2050–0050
265.383	2050–0050
265.404	2050–0050
265.440	2050–0050
265.441	2050–0050
265.443	2050–0050
265.444	2050–0050
265.445	2050–0120
265.1033	2050–0050
265.1034	2050–0050
265.1035	2050–0050
265.1061	2050–0050
265.1062	2050–0050
265.1063	2050–0050
265.1064	2050–0050
265.1090	2060–0318
265.1100	2050–0050
265.1101	2050–0050
Standards for the Management of Specific Hazardous Wastes and Specific Types of Hazardous Waste Management Facilities	
266.70 (b)	2050–0028
266.70 (c)	2050–0050
266.80	2050–0028
266.100	2050–0073
266.102	2050–0073
266.103	2050–0073
266.104	2050–0073
266.106	2050–0073
266.107	2050–0073
266.108	2050–0073
266.109	2050–0073
266.111	2050–0073
266.112	2050–0073
Appendix IX	2050–0073
Land Disposal Restrictions	
268.4–268.5	2050–0085
268.6	2050–0062
268.7	2050–0085
268.9	2050–0085
268.42	2050–0085
268.44	2050–0085
EPA Administered Permit Programs: The Hazardous Waste Permit Program	
270.1	2050–0028, 2050–0034, 2050–0009
270.10	2050–0009
270.11	2050–0034
270.13	2050–0034
270.14	2050–0009
270.14 (b)(21)	2050–0062, 2050–0085
270.15	2050–0009
270.16	2050–0009
270.17	2050–0009
270.18	2050–0009
270.19	2050–0009
270.20	2050–0009
270.21	2050–0009
270.22	2050–0073
270.23	2050–0009
270.24	2050–0009
270.25	2050–0009
270.26	2050–0115
270.30	2050–0120
270.33	2050–0009
270.40	2050–0009
270.41	2050–0009
270.42	2050–0009
270.51	2050–0009
270.62	2050–0009, 2050–0149
270.63	2050–0009
270.65	2050–0009
270.66	2050–0073, 2050–0149
270.72	2050–0034
270.73	2050–0009
Requirements for Authorization of State Hazardous Waste Programs	
271.5–271.8	2050–0041
271.20–271.21	2050–0041
271.23	2050–0041
Standards for Universal Waste Management	
273.14	2050–0145
273.15	2050–0145
273.18	2050–0145
273.32	2050–0145
273.34	2050–0145
273.35	2050–0145
273.38	2050–0145

40 CFR citation	OMB control No.
273.39	2050–0145
273.61	2050–0145
273.62	2050–0145
273.80	2050–0145
Standards for Management of Used Oil	
279.10–279.11	2050–0124
279.42	2050–0028, 2050–0124
279.43–279.44	2050–0124
279.46	2050–0050
279.51	2050–0028
279.52–279.55	2050–0124
279.56	2050–0050
279.57	2050–0050, 2050–0124
279.62	2050–0028
279.63	2050–0124
279.65–279.66	2050–0050
279.72	2050–0050
279.73	2050–0028
279.74–279.75	2050–0050
279.82	2050–0124
Technical Standards and Corrective Action Requirements for Owners and Operators of Underground Storage Tanks (USTs)	
280.11(a)	2050–0068
280.20(a)–(b)	2050–0068
280.20(e)	2050–0068
280.22(a)–(f)	2050–0068
280.22(g)	2050–0068
280.31	2050–0068
280.33(f)	2050–0068
280.34(a)	2050–0068
280.34(b)	2050–0068
280.34(c)	2050–0068
280.40	2050–0068
280.43	2050–0068
280.44	2050–0068
280.45	2050–0068
280.50	2050–0068
280.53	2050–0068
280.61	2050–0068
280.62	2050–0068
280.63	2050–0068
280.64	2050–0068
280.65	2050–0068
280.66(a)	2050–0068
280.66(c)	2050–0068
280.66(d)	2050–0068
280.67	2050–0068
280.71(a)	2050–0068
280.72(a)	2050–0068
280.74	2050–0068
280.95	2050–0068
280.96	2050–0068
280.97	2050–0068
280.98	2050–0068
280.99	2050–0068
280.100	2050–0068
280.101	2050–0068
280.102	2050–0068
280.103	2050–0068
280.104	2050–0068
280.105	2050–0068
280.106	2050–0068
280.107	2050–0068
280.108	2050–0068
280.109(a)	2050–0068
280.109(b)	2050–0068
280.110	2050–0068
280.111	2050–0068
280.111(b)(11)	2050–0068
280.114(a)–(d)	2050–0068
280.114(e)	2050–0068
Approval of State Underground Storage Tank Programs	
281.120(a)	2050–0068
281.120(g)	2050–0068
281.121	2050–0068
281.122	2050–0068
281.124	2050–0068
281.125	2050–0068
281.140	2050–0068
281.143(a)	2050–0068
281.150	2050–0068
281.152	2050–0068
281.161	2050–0068
National Oil and Hazardous Substances Pollution Contingency Plan	
300.405	2050–0046
300.425	2050–0095
300.430	2050–0096
300.435	2050–0096
300.920	2050–0141
Part 300, Appendix A	2050–0095
Designation, reportable quantities, and notification	
302.4	2050–0046
302.6	2050–0046
302.8	2050–0086
Hazardous Substances Superfund; Response Claims Procedures	
307.11–307.14	2050–0106
307.21–307.23	2050–0106
307.30–307.32	2050–0106
Reimbursement to Local Governments for Emergency Response to Hazardous Substance Releases	
310.05	2050–0077
310.10–310.12	2050–0077
310.20	2050–0077
310.30	2050–0077
310.40	2050–0077
310.50	2050–0077
310.60	2050–0077
310.70	2050–0077
310.80	2050–0077
310.90	2050–0077
Part 310, Appendix II	2050–0077
Worker Protection Standards for Hazardous Waste Operations and Emergency Response	
311.1–311.2	2050–0105
Trade Secrecy Claims for Emergency Planning and Community Right-to-Know; Health Professionals	
350.5–350.16	2050–0078
350.27	2050–0078
350.40	2050–0078
Emergency planning and notification	
Part 355, Appendix A, Appendix B	2050–0046

40 CFR citation	OMB control No.
Toxic Chemical Release Reporting: Community Right–to–Know	
Part 372	2070–0093
Part 372, subpart A	2070–0093, 2070–0143
372.22	2070–0093, 2070–0143
372.25	2070–0093
372.27	2070–0143
372.30	2070–0093, 2070–0143
372.38	2070–0093, 2070–0143
Part 372, subpart C	2070–0093, 2070–0143
Part 372, subpart D	2070–0093, 2070–0143
372.85	2070–0093
372.95	2070–0143
General Pretreatment Regulations for Existing and New Sources of Pollution	
403.5(b)	2040–0009
403.6–403.7	2040–0009
403.8(a)–(e)	2040–0009
403.8(f)	2040–0009
403.9–403.10	2040–0009
403.12(b)–(g)	2040–0009
403.12 (h), (i)	2040–0009
403.12 (j), (k), (l), (o)	2040–0009
403.12 (m), (p)	2040–0009
403.13	2040–0009
403.15	2040–0009
403.17–403.18	2040–0009, 2040–0170
Steam Electric Generating Point Source Category	
423.12–423.13	2040–0033
423.15	2040–0033
Pulp, Paper, and Paperboard Point Source Category	
430.14–430.17	2040–0033
430.24–430.27	2040–0033
430.54–430.57	2040–0033
430.64–430.67	2040–0033
430.74–430.77	2040–0033
430.84–430.87	2040–0033
430.94–430.97	2040–0033
430.104–430.107	2040–0033
430.114–430.117	2040–0033
430.134–430.137	2040–0033
430.144–430.147	2040–0033
430.154–430.157	2040–0033
430.164–430.167	2040–0033
430.174–430.177	2040–0033
430.184–430.187	2040–0033
430.194–430.197	2040–0033
430.204–430.207	2040–0033
430.214–430.217	2040–0033
430.224–430.227	2040–0033
430.234–430.237	2040–0033
430.244–430.247	2040–0033
430.254–430.257	2040–0033
430.264–430.267	2040–0033
The Builders' Paper and Board Mills Point Source Category	
431.14–431.17	2040–0033
Pharmaceutical Manufacturing Point Source Category	
439.14–439.17	2040–0033
439.24–439.27	2040–0033
439.34–439.37	2040–0033
439.44–439.47	2040–0033
Coil Coating Point Source Category	
465.03	2040–0033
Porcelain Enameling Point Source Category	
466.03	2040–0033
Aluminum Forming Point Source Category	
467.03	2040–0033
State Sludge Management Program Requirements	
501.15(a)	2040–0086, 2040–0110
501.15(b)	2040–0004, 2040–0068, 2040–0110
501.15(c)	2040–0068
501.16	2040–0057
501.21	2040–0057
Standards for the Use or Disposal of Sewage Sludge	
503.17–503.18	2040–0157
503.27–503.28	2040–0157
503.47–503.48	2040–0157
Fuel Economy of Motor Vehicles	
600.006–86	2060–0104
600.007–80	2060–0104
600.010–86	2060–0104
600.113–88	2060–0104
600.113–93	2060–0104
600.206–86	2060–0104
600.207–86	2060–0104
600.209–85	2060–0104
600.306–86	2060–0104
600.307–86	2060–0104
600.311–86	2060–0104
600.312–86	2060–0104
600.313–86	2060–0104
600.314–86	2060–0104
600.507–86	2060–0104
600.509–86	2060–0104
600.510–86	2060–0104
600.512–86	2060–0104
Toxic Substances Control Act: General	
700.45	2070–0012, 2070–0038
Reporting and Recordkeeping Requirements	
704.5	2010–0019, 2070–0067
704.11	2010–0019, 2070–0067
704.25	2070–0067
704.33	2070–0067
704.43	2070–0067
704.45	2070–0067
704.95	2070–0067
704.102	2070–0067

40 CFR citation	OMB control No.
704.104	2070–0067
704.175	2070–0067
Chemical Imports and Exports	
707.65	2070–0030
707.67	2070–0030
707.72	2070–0030
Inventory Reporting Regulations	
Part 710	2070–0070
Chemical Information Rules	
712.5	2070–0054
712.7	2070–0054
712.20	2070–0054
712.28	2070–0054
712.30	2070–0054
Health and Safety Data Reporting	
716.5	2070–0004
716.10	2070–0004
716.20	2070–0004
716.25	2070–0004
716.30	2070–0004
716.35	2070–0004
716.40	2070–0004
716.45	2070–0004
716.50	2070–0004
716.60	2070–0004
716.65	2070–0004
716.105	2070–0004
716.120	2070–0004
Records and Reports of Allegations That Chemical Substances Cause Significant Adverse Reactions to Health or the Environment	
717.5	2070–0017
717.7	2070–0017
717.12	2070–0017
717.15	2070–0017
717.17	2070–0017
Premanufacture Notification	
720.1	2070–0012
720.22	2070–0012
720.25	2070–0012
720.30	2070–0012
720.36	2070–0012
720.38	2070–0012
Part 720, subpart C	2070–0012
720.62	2070–0012
720.75	2070–0012
720.78	2070–0012
720.80	2070–0012
720.85	2070–0012
720.87	2070–0012
720.90	2070–0012
720.102	2070–0012
Part 720, Appendix A	2070–0012
Significant New Uses of Chemical Substances	
Part 721, subpart A	2070–0012, 2070–0038
721.72	2070–0012, 2070–0038
721.125	2070–0012, 2070–0038
721.160	2070–0012, 2070–0038
721.170	2070–0012, 2070–0038
721.185	2070–0012, 2070–0038
721.225	2070–0012
721.267	2070–0012
721.275	2070–0012
721.285	2070–0012
721.320	2070–0012
721.323	2070–0012
721.325	2070–0012
721.336	2070–0012
721.370	2070–0012
721.390	2070–0012
721.400	2070–0012
721.415	2070–0012
721.430	2070–0012
721.445	2070–0012
721.460	2070–0012
721.470	2070–0012
721.484	2070–0012
721.490	2070–0012
721.505	2070–0012
721.520	2070–0012
721.530	2070–0012
721.536	2070–0012
721.540	2070–0012
721.550	2070–0012
721.562	2070–0012
721.575	2070–0012
721.600	2070–0012
721.625	2070–0012
721.639	2070–0012
721.642	2070–0012
721.646	2070–0012
721.650	2070–0038
721.700	2070–0012
721.715	2070–0012
721.750	2070–0012
721.757	2070–0012
721.775	2070–0012
721.785	2070–0012
721.805	2070–0012
721.825	2070–0012
721.840	2070–0012
721.875	2070–0012
721.925	2070–0012
721.950	2070–0012
721.982	2070–0012
721.1000	2070–0012
721.1025	2070–0038
721.1050	2070–0012
721.1068	2070–0012
721.1075	2070–0012
721.1120	2070–0012
721.1150	2070–0012
721.1175	2070–0012
721.1187	2070–0012
721.1193	2070–0012
721.1210	2070–0012
721.1225	2070–0012
721.1240	2070–0012
721.1300	2070–0012
721.1325	2070–0012
721.1350	2070–0012
721.1372	2070–0012
721.1375	2070–0012
721.1425	2070–0038
721.1430	2070–0038
721.1435	2070–0038
721.1440	2070–0038

40 CFR citation	OMB control No.
721.1450	2070–0012
721.1500	2070–0012
721.1525	2070–0012
721.1550	2070–0012
721.1555	2070–0012
721.1568	2070–0012
721.1575	2070–0012
721.1612	2070–0012
721.1625	2070–0012
721.1630	2070–0012
721.1637	2070–0012
721.1640	2070–0012
721.1643	2070–0012
721.1645	2070–0012
721.1650	2070–0012
721.1660	2070–0038
721.1675	2070–0012
721.1700	2070–0012
721.1725	2070–0012
721.1728	2070–0012
721.1732	2070–0012
721.1735	2070–0012
721.1737	2070–0012
721.1738	2070–0012
721.1740	2070–0012
721.1745	2070–0012
721.1750	2070–0012
721.1755	2070–0012
721.1765	2070–0012
721.1769	2070–0012
721.1775	2070–0012
721.1790	2070–0038
721.1800	2070–0012
721.1820	2070–0012
721.1825	2070–0012
721.1850	2070–0012
721.1875	2070–0012
721.1900	2070–0012
721.1920	2070–0012
721.1925	2070–0012
721.1950	2070–0012
721.2025	2070–0012
721.2050	2070–0012
721.2075	2070–0012
721.2084	2070–0038
721.2085	2070–0012
721.2086	2070–0012
721.2088	2070–0012
721.2089	2070–0012
721.2092	2070–0038
721.2095	2070–0012
721.2097	2070–0012
721.2120	2070–0012
721.2140	2070–0012
721.2170	2070–0012
721.2175	2070–0012
721.2250	2070–0012
721.2260	2070–0012
721.2270	2070–0012
721.2275	2070–0012
721.2287	2070–0038
721.2340	2070–0012
721.2355	2070–0038
721.2380	2070–0012
721.2410	2070–0012
721.2420	2070–0012
721.2475	2070–0012
721.2520	2070–0012
721.2527	2070–0012
721.2540	2070–0012
721.2560	2070–0012
721.2565	2070–0012
721.2575	2070–0012
721.2600	2070–0038
721.2625	2070–0012
721.2650	2070–0012
721.2675	2070–0012
721.2725	2070–0038
721.2750	2070–0012
721.2800	2070–0038
721.2815	2070–0012
721.2825	2070–0012
721.2840	2070–0012
721.2860	2070–0012
721.2880	2070–0012
721.2900	2070–0012
721.2920	2070–0012
721.2930	2070–0012
721.2940	2070–0012
721.2950	2070–0012
721.3000	2070–0012
721.3020	2070–0012
721.3028	2070–0012
721.3034	2070–0012
721.3040	2070–0012
721.3060	2070–0012
721.3063	2070–0012
721.3080	2070–0012
721.3100	2070–0012
721.3120	2070–0012
721.3140	2070–0012
721.3152	2070–0012
721.3160	2070–0038
721.3180	2070–0012
721.3200	2070–0012
721.3220	2070–0038
721.3248	2070–0012
721.3260	2070–0012
721.3320	2070–0012
721.3340	2070–0012
721.3350	2070–0038
721.3360	2070–0012
721.3364	2070–0012
721.3374	2070–0012
721.3380	2070–0012
721.3390	2070–0012
721.3420	2070–0012
721.3430	2070–0038
721.3435	2070–0012
721.3437	2070–0012
721.3440	2070–0012
721.3460	2070–0012
721.3480	2070–0012
721.3486	2070–0012
721.3500	2070–0012
721.3520	2070–0012
721.3560	2070–0012
721.3620	2070–0012
721.3625	2070–0012
721.3627	2070–0012
721.3628	2070–0012
721.3629	2070–0012
721.3640	2070–0012
721.3680	2070–0012
721.3700	2070–0012
721.3720	2070–0012
721.3740	2070–0012
721.3760	2070–0012
721.3764	2070–0012
721.3780	2070–0012
721.3790	2070–0012
721.3800	2070–0012
721.3815	2070–0012
721.3840	2070–0012
721.3860	2070–0012
721.3870	2070–0012

40 CFR citation	OMB control No.
721.3880	2070–0012
721.3900	2070–0012
721.4000	2070–0012
721.4020	2070–0012
721.4040	2070–0012
721.4060	2070–0012
721.4080	2070–0038
721.4100	2070–0012
721.4110	2070–0012
721.4128	2070–0012
721.4133	2070–0012
721.4140	2070–0038
721.4155	2070–0038
721.4160	2070–0038
721.4180	2070–0038
721.4200	2070–0012
721.4215	2070–0012
721.4220	2070–0012
721.4240	2070–0012
721.4250	2070–0012
721.4255	2070–0012
721.4260	2070–0012
721.4270	2070–0012
721.4280	2070–0012
721.4300	2070–0012
721.4320	2070–0012
721.4340	2070–0012
721.4360	2070–0038
721.4380	2070–0012
721.4390	2070–0012
721.4400	2070–0012
721.4420	2070–0012
721.4460	2070–0012
721.4463	2070–0012
721.4466	2070–0012
721.4470	2070–0012
721.4473	2070–0012
721.4484	2070–0012
721.4480	2070–0012
721.4490	2070–0012
721.4494	2070–0012
721.4497	2070–0012
721.4500	2070–0012
721.4520	2070–0012
721.4550	2070–0012
721.4568	2070–0012
721.4585	2070–0012
721.4587	2070–0012
721.4590	2070–0012
721.4594	2070–0012
721.4600	2070–0012
721.4620	2070–0012
721.4640	2070–0012
721.4660	2070–0012
721.4663	2070–0012
721.4668	2070–0012
721.4680	2070–0012
721.4685	2070–0012
721.4700	2070–0012
721.4720	2070–0012
721.4740	2070–0038
721.4780	2070–0012
721.4790	2070–0012
721.4794	2070–0012
721.4800	2070–0012
721.4820	2070–0012
721.4840	2070–0012
721.4880	2070–0012
721.4925	2070–0038
721.5050	2070–0012
721.5075	2070–0012
721.5175	2070–0038
721.5192	2070–0012
721.5200	2070–0012
721.5225	2070–0012
721.5250	2070–0012
721.5275	2070–0012
721.5276	2070–0012
721.5278	2070–0012
721.5282	2070–0012
721.5285	2070–0012
721.5300	2070–0012
721.5310	2070–0012
721.5325	2070–0012
721.5330	2070–0012
721.5350	2070–0012
721.5375	2070–0012
721.5385	2070–0012
721.5400	2070–0012
721.5425	2070–0012
721.5450	2070–0012
721.5475	2070–0012
721.5500	2070–0012
721.5525	2070–0012
721.5540	2070–0012
721.5545	2070–0012
721.5550	2070–0012
721.5575	2070–0012
721.5600	2070–0038
721.5700	2070–0012
721.5705	2070–0012
721.5710	2070–0038
721.5740	2070–0012
721.5760	2070–0012
721.5763	2070–0012
721.5769	2070–0012
721.5780	2070–0012
721.5800	2070–0012
721.5820	2070–0012
721.5840	2070–0012
721.5860	2070–0012
721.5880	2070–0012
721.5900	2070–0012
721.5910	2070–0012
721.5915	2070–0012
721.5920	2070–0012
721.5930	2070–0012
721.5960	2070–0012
721.5970	2070–0012
721.5980	2070–0012
721.5990	2070–0012
721.6000	2070–0038
721.6020	2070–0012
721.6060	2070–0012
721.6070	2070–0012
721.6080	2070–0012
721.6085	2070–0012
721.6090	2070–0012
721.6097	2070–0012
721.6100	2070–0012
721.6110	2070–0012
721.6120	2070–0012
721.6140	2070–0012
721.6160	2070–0012
721.6180	2070–0012
721.6186	2070–0012
721.6200	2070–0012
721.6220	2070–0012
721.6440	2070–0012
721.6470	2070–0012
721.6500	2070–0012
721.6520	2070–0012
721.6540	2070–0012
721.6560	2070–0012
721.6580	2070–0012
721.6600	2070–0012

40 CFR citation	OMB control No.
721.6620	2070–0012
721.6625	2070–0012
721.6640	2070–0012
721.6660	2070–0012
721.6680	2070–0012
721.6700	2070–0012
721.6720	2070–0012
721.6740	2070–0012
721.6760	2070–0012
721.6780	2070–0012
721.6820	2070–0012
721.6840	2070–0012
721.6880	2070–0012
721.6900	2070–0012
721.6920	2070–0012
721.6940	2070–0012
721.6960	2070–0012
721.6980	2070–0012
721.7000	2070–0012
721.7020	2070–0012
721.7040	2070–0012
721.7046	2070–0012
721.7080	2070–0012
721.7100	2070–0012
721.7140	2070–0012
721.7160	2070–0012
721.7180	2070–0012
721.7200	2070–0012
721.7210	2070–0012
721.7220	2070–0012
721.7240	2070–0012
721.7260	2070–0012
721.7280	2070–0012
721.7300	2070–0012
721.7320	2070–0012
721.7340	2070–0012
721.7360	2070–0012
721.7370	2070–0012
721.7400	2070–0012
721.7420	2070–0012
721.7440	2070–0012
721.7450	2070–0012
721.7460	2070–0012
721.7480	2070–0012
721.7500	2070–0012
721.7540	2070–0012
721.7560	2070–0012
721.7580	2070–0012
721.7600	2070–0012
721.7620	2070–0012
721.7655	2070–0012
721.7660	2070–0012
721.7680	2070–0012
721.7780	2070–0012
721.7710	2070–0012
721.7720	2070–0012
721.7700	2070–0012
721.7740	2070–0012
721.7760	2070–0012
721.7770	2070–0012
721.8075	2070–0012
721.8082	2070–0012
721.8090	2070–0012
721.8100	2070–0012
721.8155	2070–0012
721.8160	2070–0012
721.8170	2070–0012
721.8175	2070–0012
721.8225	2070–0012
721.8250	2070–0012
721.8265	2070–0012
721.8275	2070–0012
721.8290	2070–0012
721.8300	2070–0012
721.8325	2070–0012
721.8335	2070–0012
721.8350	2070–0012
721.8375	2070–0012
721.8400	2070–0012
721.8425	2070–0012
721.8450	2070–0012
721.8475	2070–0012
721.8500	2070–0012
721.8525	2070–0012
721.8550	2070–0012
721.8575	2070–0012
721.8600	2070–0012
721.8650	2070–0012
721.8654	2070–0012
721.8670	2070–0012
721.8673	2070–0012
721.8675	2070–0012
721.8700	2070–0012
721.8750	2070–0012
721.8775	2070–0012
721.8825	2070–0012
721.8850	2070–0012
721.8875	2070–0012
721.8900	2070–0012
721.8965	2070–0012
721.9000	2070–0038
721.9075	2070–0012
721.9100	2070–0012
721.9220	2070–0012
721.9240	2070–0012
721.9260	2070–0012
721.9280	2070–0012
721.9300	2070–0012
721.9320	2070–0012
721.9360	2070–0012
721.9400	2070–0012
721.9420	2070–0012
721.9460	2070–0012
721.9470	2070–0038
721.9480	2070–0012
721.9495	2070–0012
721.9500	2070–0012
721.9505	2070–0012
721.9507	2070–0012
721.9510	2070–0012
721.9520	2070–0012
721.9525	2070–0012
721.9526	2070–0012
721.9527	2070–0012
721.9530	2070–0012
721.9540	2070–0012
721.9550	2070–0012
721.9570	2070–0012
721.9580	2070–0038
721.9620	2070–0012
721.9630	2070–0012
721.9650	2070–0012
721.9656	2070–0012
721.9658	2070–0012
721.9660	2070–0038
721.9665	2070–0012
721.9675	2070–0012
721.9680	2070–0012
721.9700	2070–0012
721.9720	2070–0012
721.9730	2070–0012
721.9740	2070–0012
721.9750	2070–0012
721.9780	2070–0012
721.9800	2070–0012
721.9820	2070–0012

40 CFR citation	OMB control No.
721.9850	2070–0012
721.9870	2070–0012
721.9892	2070–0012
721.9900	2070–0012
721.9920	2070–0012
721.9925	2070–0012
721.9930	2070–0038
721.9940	2070–0012
721.9957	2070–0038
721.9970	2070–0012
721.9975	2070–0012
Premanufacture Notification Exemptions	
723.50	2070–0012
723.175	2070–0012
723.250(m)(1)	2070–0012
Lead-Based Paint Poisioning Prevention in Certain Residential Structures	
Part 745, subpart F	2070–0151
Part 745, subpart L	2070–0155
Part 745, subpart Q	2070–0155
Water Treatment Chemicals	
Part 749, subpart D	2060–0193
749.68	2060–0193
Polychlorinated Biphenyls (PCBs) Manufacturing, Processing, Distribution in Commerce, and Use Prohibitions	
761.20	2070–0008, 2070–0021
761.30	2070–0003, 2070–0008, 2070–0021
761.60	2070–0011
761.65	2070–0112
761.70	2070–0011
761.75	2070–0011
761.80	2070–0021
761.93	2070–0149
761.93(a)(1)(iii)	2070–0149
761.93(b)	2070–0149
761.125	2070–0112
761.180	2070–0112
761.185	2070–0008
761.187	2070–0008
761.193	2070–0008
761.202	2070–0112
761.205	2070–0112
761.207	2070–0112
761.207(a)	2050–0039
761.208	2070–0112
761.209	2070–0112
761.210	2070–0112
761.211	2070–0112
761.215	2070–0112
761.218	2070–0112
Asbestos	
Part 763, subpart E	2070–0091
Part 763, subpart G	2070–0072
Part 763, subpart I	2070–0082
Dibenzo-para-dioxin/Dibenzofurans	
766.35(b)(1)	2070–0054
766.35(b)(2)	2070–0054
766.35(b)(3)	2070–0017
766.35(b)(4)(iii)	2070–0054
766.35(c)(1)(i)	2070–0054
766.35(c)(1)(ii)	2070–0054
766.35(c)(1)(iii)	2070–0017
766.35(d) Form	2070–0017
766.38	2070–0054
Procedures Governing Testing Consent Agreements and Test Rules	
790.5	2070–0033
790.42	2070–0033
790.45	2070–0033
790.50	2070–0033
790.55	2070–0033
790.60	2070–0033
790.62	2070–0033
790.68	2070–0033
790.80	2070–0033
790.82	2070–0033
790.85	2070–0033
790.99	2070–0033
Good Laboratory Practice Standards	
Part 792	2010–0019, 2070–0004, 2070–0017, 2070–0033, 2070–0054, 2070–0067
Provisional Test Guidelines	
795.45	2070–0067
795.232	2070–0033
Identification of Specific Chemical Substance and Mixture Testing Requirements	
799.1053	2070–0033
799.1250	2070–0033
799.1560	2070–0033
799.1575	2070–0033
799.1645	2070–0033
799.1700	2070–0033
799.2155	2070–0033
799.2325	2070–0033
799.2475	2070–0033
799.2500	2070–0033
799.2700	2070–0033
799.3300	2070–0033
799.4360	2070–0033
799.4440	2070–0033
799.5000	2070–0033
799.5025	2070–0033
799.5050	2070–0033
799.5055	2070–0033
799.5075	2070–0033

[1] The ICRs referenced in this section of the table encompass the applicable general provisions contained in 40 CFR part 60, subpart A, which are not independent information collection requirements.

[2] The ICRs referenced in this section of the table encompass the applicable general provisions contained in 40 CFR part 61, subpart A, which are not independent information collection requirements.

[3] The ICRs referenced in this section of the table encompass the applicable general provisions contained in 40 CFR part 63, subpart A, which are not independent information collection requirements.

[58 FR 27472, May 10, 1993]

EDITORIAL NOTE: For Federal Register citations affecting §9.1 see the List of CFR Sections Affected in the Finding Aids section of this volume.

List of CFR Sections Affected

All changes in this volume of the Code of Federal Regulations which were made by documents published in the FEDERAL REGISTER since January 1, 1986, are enumerated in the following list. Entries indicate the nature of the changes effected. Page numbers refer to FEDERAL REGISTER pages. The user should consult the entries for chapters and parts as well as sections for revisions.

Title 40 was established at 36 FR 12213, June 29, 1971. For the period before January 1, 1986, see the ''List of CFR Sections Affected, 1964–1972 and 1973–1985,'' published in six separate volumes.

1986

40 CFR

51 FR Page

Chapter I

80.24 (a) introductory text, (1), and (2) and (b)(2) revised 33731

1987

40 CFR

52 FR Page

Chapter I

80 Appendix B heading revised; text amended 259

1988

(No Regulations Published)

1989

40 CFR

54 FR Page

Chapter I

80 Authority citation revised 11883

80.2 (l) revised; (t), (u), and (v) added 11883

80.27 Added 11883

Table amended 33219

(a), (d)(1) and (3)(iii) corrected 27017

80.28 Added 11885

(f) and (g)(4)(iii)(F) corrected 27017

80 Appendix D added 11886

Appendix E added 11897

Appendix F added 11903

40 CFR—Continued

54 FR Page

Chapter I—Continued

Appendix D corrected 27017

Appendix E corrected 27018

1990

40 CFR

55 FR Page

Chapter I

80.2 (h), (j), (l), (o), (r) and (t) revised; (w), (x), (y), (z), (aa), and (bb) added 34137

80.27 Table designated as (a)(1); heading and (a)(2) added; eff. 7–11–90 23667

80.29 Added 34138

80.30 Added 34138

80.31 Added 34140

80 Appendix G added 34140

1991

40 CFR

56 FR Page

Chapter I

73 Added 65601

80 Interpretative rule 5352

Program extension 46119, 57986

Authority citation revised 64710

80.2 (d) removed 13768

(cc) and (dd) added 64710

80.22 (b) and (c) removed 13768

80.27 (a) table amended 20548

(a) table amended 37022

40 CFR—Continued

56 FR Page

Chapter I—Continued
(a)(1) introductory text removed; (a) introductory text redesignated as (a)(1) introductory text and revised; (a)(2) introductory text and (d) revised 64710
80.28 (b)(1), (3), (c)(1), (4), (d)(1), (4), (e)(1), (2), (5), (f)(1), (2) and (4) revised; (g)(8) added 64711
80 Appendix B amended 13768
Appendix C removed 13768

1992

40 CFR

57 FR Page

Chapter I
80 Program extension 46316
80.2 (bb) removed 19537
(pp), (qq) and (rr) added 47771
80.27 (a)(2) table amended 20205
80.29 (c) removed; (d) and (e) redesignated as (c) and (d); (a), new (c) and (d) revised 19537
80.31 Removed 19538
80.35 (Subpart C) Added 47771

1993

40 CFR

58 FR Page

Chapter I
72 Added 3650
72.2 Amended 15647
Corrected 33770, 40746, 40747
72.6 (a)(2) revised; (a)(3)(iii) through (vii), (b)(4), (5), (6), (7) and (c) added 15648
72.8 (c)(2)(ii) corrected 40747
72.30 (b)(2)(iv) through (viii) added 15649
72.41 (e)(3)(iii) and (iv) corrected 40747
72.44 (f)(3)(i) and (ii) revised; (g)(1)(ii) amended 15649
72.74 (b)(1)(iii) corrected 40747
72.91 (a) introductory text and (3)(iii) corrected 40747
72.92 (c)(2)(v)(C) corrected 40747
72 Appendix D added 15649
73 Notice of procedure 48318
73.1—73.3 (Subpart A) Revised 3687
73.1 (f) added 15650
73.10—73.27 (Subpart B) Added 3687

40 CFR—Continued

58 FR Page

Chapter I—Continued
73.10 (b), (c) and (d) added 15650
Table 2 corrected; Table 4 correctly revised 33770
(a) Table 1 corrected 40747
73.11 Added 15705
73.12 Added 15707
73.13 Added 15708
73.16 Added 15708
73.18 Added 15710
73.19 Added 15710
73.20 Added 15711
73.21 Added 15713
73.26 Added 15714
73.27 (a)(2), (3), (b)(2) through (5) and (c)(2) through (5) added 15714
73.30—73.38 (Subpart C) Added 3691
73.30 (a) corrected 40747
73.31 (c)(1) introductory text corrected 40747
73.32 (a)(1) corrected 40747
73.50—73.53 (Subpart D) Added 3694
73.72 (c) revised 3695
Table 2 redesignated as Table 1 15650
Technical correction 40747
73.80—73.86 (Subpart F) Added 3695
73.80 (b) corrected 40747
73.81 (b)(4) corrected 40747
73.82 Heading corrected 40747
73.90 (Subpart G) Added 15716
(a) introductory text corrected 33770
75 Added 3701
Authority citation revised 15716
Meeting 67692
75.1 (b) corrected 34126
(b) existing text redesignated as (b)(1) and (2); new (b)(2) corrected 40747
75.2 (b)(2) and (3) revised 15716
75.4 (c) revised 15717
75.5 (b) corrected 40747
75.6 (a)(12) corrected 34126
(a)(4) corrected 40747
75.7 Corrected 40747
75.11 (c) introductory text corrected 40747
75.12 (c)(1) corrected 34126
75.14 (d) corrected 34126
75.15 (a)(3)(iii) and (b) heading corrected 34126

40 CFR—Continued

58 FR Page

Chapter I—Continued
(a) introductory text, (2) and (b)(1) corrected 40747
75.16 (b)(2)(i) corrected 34126
(e) corrected 40747
75.17 (b) heading corrected 34126
(a)(2)(iii)(a) correctly redesignated as (a)(2)(iii)(A) 40747
(a)(2)(iii)(B) and (b)(2) corrected 40748
75.20 (a)(1) heading corrected 34126
(b)(3), (c) introductory text, (9)(i) introductory text, (B) and (d) corrected; (c)(5)(iv) correctly added 40748
75.31 (b)(2), (c)(2) and (3) corrected 40748
75.32 (b) correctly revised 40748
75.33 (c)(2)(ii)(B) corrected 34126
75.34 (b)(1) corrected 40748
75.41 (b)(2)(i) and (c)(2)(ii) corrected 34126
(a)(9)(i), (ii), (b)(1)(i), (2)(i), (iv)(A), (C), (v)(A), (B), (c)(1)(i), (ii) and (2)(i) corrected 40748
75.48 (a)(3)(vii) corrected 34126
(a)(3) corrected 40748
75.50 (c)(3)(ii) corrected 34126
(b) introductory text, (6), (c)(1)(iii), (iv), (vi), (2)(iii), (iv), (v), (vii), (3)(ii), (iii), (iv) Table 3, (d) introductory text, (3) through (6), (8), (9), (e)(1)(iii), (iv), (v), (vii), (viii), (2)(ii), (iv) and (v) corrected 40749
75.51 (b)(1)(vii) correctly designated as (b)(1)(viii); (a)(1)(iii) through (vi), (viii), (2)(i), (iii), (b) introductory text, new (b)(1)(viii), (ix), (c)(1)(ii), (vi), (d)(1)(ii) and (iv) corrected 40749
75.52 (a)(5)(iv)(G) and (H) correctly redesignated as (a)(5)(v) and (vi) 40749
75.53 (a) introductory text, (c)(2) introductory text and (4)(vi) corrected 40749
(c)(8) and (9) corrected; (c)(10), (i), (ii), (A) and (B) correctly redesignated as (d), (1), (2), (i) and (ii) 40750
75 Appendixes A, C, D, E and F corrected 34126

40 CFR—Continued

58 FR Page

Chapter I—Continued
Appendixes A, B and C corrected 40750
Appendixes C through H corrected 40751
Appendix H corrected 40752
77 Added 3757
78 Added 3760
79 Authority citation revised 65554
79.8 Revised 65554
80 Meeting 13413
Authority citation revised 16019
OMB number 34370
Petition for exemption 48968
80.5 Revised 65554
80.22 (j) added 16019
80.27 (b) and (c) revised; (e) added 14484
(a)(2) table amended 26069, 46511
80.28 (g)(1)(i), (3)(ii), and (6)(ii) removed; (g)(1)(iii), (3)(iii), (6)(iii), and (iv) redesignated as (g)(1)(i), (3)(ii), (6)(ii), and (iii); (b)(1), (2), (3), (f)(3), (4), new (g)(1)(i), (ii), (2) introductory text, (ii), (3) introductory text, new (ii), (4)(i), new (6)(ii), (iii), and (7) revised; (b)(4) and (f)(5) added 14484
80 Appendix D amended 14485
Appendix E revised 14488
Appendix D corrected 19152

1994

40 CFR

59 FR Page

Chapter I
72 Authority citation revised 60229
72.41 (b)(1)(i), (c)(3) introductory text, (i)(B), (C), (ii), (4)(ii), (d)(2) and (e)(1)(i) revised; (c)(3)(i)(D), (iii) and (d)(3) added 60230
(c)(5) and (e)(3)(iv) revised; (c)(6), (7) and (e)(1)(iii) added 60238
72.43 (a) introductory text, (1) introductory text, (b)(1) introductory text, (ii)(A), (3)(i), (c)(4)(i), (ii), (iv), (d) and (f)(1)(ii) revised; (a)(2) added 60230
72.91 (a)(3)(iii) introductory text, (iv), (4), (5), (6) and (b)(2) revised; (a)(7) added 60231

40 CFR—Continued

59 FR Page

Chapter I—Continued

75.4 (a)(3) revised; (a)(4) added 42511
76 Added 13564
79 Authority citation revised 33092
79.2 (d), (e) and (f) revised 33092
79.3 Revised 33092
79.4 (b)(1) revised 33092
79.6 Revised 33092
79.10 Revised 33092
79.11 Introductory text revised; (h) amended; (i) and (j) added 33092
79.12 Revised 33093
79.13 (a) revised 33093
79.20 Revised 33093
79.21 Introductory text and (d) revised; (h) and (i) added 33093
79.22 Revised 33093
79.23 (a) revised; (b) removed; (c) redesignated as (b) 33093
79.31 (b) revised 33093
79.50—79.68 (Subpart F) Added 33093
79.51 OMB number pending 33094
79.52 OMB number pending 33099
79.57 OMB number pending 33111
79.58 OMB number pending 33115
79.59 OMB number pending 33117
79.60 OMB number pending 33119
79.61 OMB number pending 33124
79.62 OMB number pending 33129
79.63 OMB number pending 33132
79.64 OMB number pending 33134
79.65 OMB number pending 33135
79.66 OMB number pending 33137
79.67 OMB number pending 33139
79.68 OMB number pending 33140
80 Petition for exemption 13610, 26129
Announcement 44633
80.2 (ee) through (nn) added (OMB number pending) 7812
(ss) added 39289
(j) and (o) revised; (oo), (tt) and (uu) added 48489
Regulation at 59 FR 39289 stayed 60715
80.22 Heading revised 48490
80.27 (a)(2) table amended 15629, 15633
80.29 Revised; interim (OMB number pending) 35858
80.30 (g)(7) added; interim 35859
80.32 Added 48490

40 CFR—Continued

59 FR Page

Chapter I—Continued

80.33 Added 48490
80.40—80.82 (Subpart D) Added (OMB number pending) 7813
80.41 (h)(2)(iii), (j)(2) and (m)(1) introductory text revised 36958
80.42 (a) introductory text, (b)(1)(ii), (2)(ii) and (3)(ii) amended; (b)(4) added; (c)(1) table revised 36958
80.45 (b)(3) Table 3, (c)(1)(iv)(A) Table 6, (C)(*5*), (*11*), (*12*), (*14*), (D)(*5*), (*11*), (*12*), (*14*), (8)(ii), (d)(1)(iv)(A), Table 7, (C)(*5*), (e)(3) introductory text and (f)(1) revised; (c)(1)(iv)(B), (C)(*9*), (*13*), (D)(*9*), (*13*), (3)(i), (ii), (4)(ii), (d)(1)(iv)(B), (C)(*9*), (e)(1)(ii), (4)(iii), (5)(iv), (6)(iv), (9) and (10) amended; (e)(3)(i) and (ii) removed 36959
80.46 (f)(1)(ii)(K) table revised 36961
80.48 (c)(1) introductory text and (g) revised; (c)(1)(v) and (2)(iii) amended 36962
80.49 (a)(5)(i) table and (b)(3)(iii) revised 36962
80.59 (a) amended 36962
80.65 (d)(2)(iii), (v)(B), (vi), (3), (e)(2)(i) table, (ii)(A), (f)(4) introductory text and (h) revised; (e)(1) amended 36962
(d)((2)(vi) revised 39289
Regulation at 59 FR 39289 stayed 60715
80.66 (g)(1) and (2)(ii) revised 36963
80.68 (c)(12) redesignated as (c)(13); (c)(8)(ii)(A), (9)(ii)(A), (B), (10)(i), new (13)(v)(G), (H) and (L) revised; new (c)(12) added; new (c)(13) introductory text amended 36963
80.69 (a)(7)(ii) introductory text and (b)(3) revised 36964
80.70 (d)(3)(viii), (ix), (j)(4)(i), (ii), (10)(iv), (11)(i) and (14)(xvii) revised; (d)(3)(x) and (xi) added; (j)(15) removed 36964
80.75 (b), (f)(2)(ii)(A)(*1*) and (j) revised 36964
80.76 (c)(2), (3) introductory text, (i) and (ii) revised 36965
80.77 (g)(2)(iii), (iv)(A), (B) and (h) introductory text revised; (g)(3) added 36965

40 CFR—Continued

59 FR Page

Chapter I—Continued

80.78 (a)(1)(v)(B) and (C) revised 36965
80.81 (a)(2)(iii), (b)(4) and (h) revised 36965
(c)(2), (5), (6) and (10) revised 39289
Regulation at 59 FR 39289 stayed 60715
80.83 Added (OMB number pending in part) 39290
Regulation at 59 FR 39290 stayed 60715
80.90—80.106 (Subpart E) Added (OMB number pending) 7860
80.90 (b)(1) amended; (e)(2) revised 36965
80.91 (c)(5)(iv), (e)(5)(vi)(A), (B) and (7)(i)(D) added; (d)(1)(i)(A) introductory text, (B), (e)(2)(iv), (v)(A), (4)(i)(A), (B), (ii)(A), (B) and (5)(vi) amended; (d)(1)(i)(A)(*1*), (e)(5)(vii) introductory text, (viii), (7)(i)(A), (C) and (f)(2)(ii) revised 36966
80.93 (a)(3)(ii) amended; (a)(3)(iv) added; (c)(9) revised 36968
80.101 (e)(3), (f)(4)(i), (ii), (g)(1) and (i)(1) introductory text revised 36968
80.102 (b)(1), (d)(1)(i) and (2)(i) amended; (d)(3)(iv), (e)(2)(i) and (f)(2)(i) revised; (d)(3)(v) added 36969
80.104 (a)(2)(ix) revised 36969
80.105 (a)(2) revised 36969
80.125 (a) revised 36969
80.125—80.130 (Subpart F) Added (OMB number pending) 7875
80.128 (e)(2), (5) and (g)(3)(iii) revised 36969
(a) and (e)(2) revised; (e)(4) and (5) amended; (e)(6) added 39292
Regulation at 59 FR 39292 stayed 60715
80.129 (e) revised 36969
(a), (d)(3)(iii) and (iv) revised; (d)(3)(v) added 39292
Regulation at 59 FR 39292 stayed 60715
80.140—80.160 (Subpart G) Added 54706
80.141 OMB number pending 54707
80.157 OMB number pending 54713
80.158 OMB number pending 54714
80.160 OMB number pending 54715

1995

40 CFR

60 FR Page

Chapter I

72 Authority citation revised 17111
72.2 Amended 17111, 18468
Amended; interim; eff. 7–17–95 26514
72.4 (a)(1) and (2) revised 17113
72.9 (g)(6) and (7) revised 17113
72.13 (a)(8) and (9) redesignated as (a)(9) and (10); new (a)(8) added; new (a)(9) and new (10) revised; interim; eff. 7–17–95 26516
72.21 (e) revised 17113
72.30 (c) revised 17113
72.33 (a), (b)(2), (3), (c)(2), (4), (e) and (f) revised 18468
72.40 (b)(1) introductory text revised 17113
72.43 (e) revised 18470
72.72 (b)(1) introductory text, (i)(A), (B), (ii)(A), (C), (v), (xiv) and (5)(vi) revised; (b)(5)(i) amended 17113
72.81 (b)(3) and (4) amended; (b)(5) added 17114
72.83 (a)(6) and (11) revised; (a)(12) added 17114
72.91 (a) introductory text revised 18470
72.92 (a), (b)(2)(ii)(F), (G), (H), (c)(2)(v) and Table 1 revised; (b)(1) removed; (b)(2)(ii)(I) and (J) added 18470
73 Authority citation revised 17114
73.34 (c)(2) and (6) revised 17114
73.35 (b)(1) and (2) revised 17114
73.52 (a)(3) revised 17114
74 Added 17115
75 Authority citation revised 26516, 26566
75.2 (b)(4) removed; interim; eff. 7–17–95 26516
75.4 (a) introductory text revised; (a)(5) added 17131
(a) introductory text amended; (e) redesignated as (h); (a)(1) through (4), (b), (c), (d) and new (h) revised; new (e), (f) and (g) added; interim; eff. 7–17–95 26516
75.5 (e) revised; (f) added; interim; eff. 7–17–95 26517
75.6 (a), (b)(1) through (6) revised; (b)(7), (8) and (9); (c), (d) and (e) added; interim; eff. 7–17–95 26517

40 CFR—Continued

60 FR Page

Chapter I—Continued

75.8 Added; interim; eff. 7–17–95 26519
75.10 (a)(1), (2), (3), (d), (e) and (f) revised; interim; eff. 7–17–95 26519
75.11 (c) and (d) revised; (e) redesignated as (f); interim; eff. 7–17–95 26520
(a) amended; (e) and (g) added; interim; eff. 7–17–95 through 12–31–96 26566
75.12 (c) revised; interim; eff. 7–17–95 26520
75.13 (a) and (c) revised; interim; eff. 7–17–95 26521
75.14 (c) revised; interim; eff. 7–17–95 26521
75.15 (a) introductory text, (1) and (2) revised; (b)(1) amended; interim; eff. 7–17–95 26521
75.16 (a)(2)(ii)(A) and (b)(2)(ii)(A) revised 17131
Revised; interim; eff. 7–17–95 26522
75.17 (a)(2)(i)(C) added; (c) removed; (d) redesignated as (c); (a)(2)(i)(B) and new (c) revised; interim; eff. 7–17–95 26523
75.18 (b) revised 26524
(b)(2) revised; (b)(3) removed 40296
75.20 (a)(3) amended 17131
(a) introductory text, (1), (2), (3), (4) introductory text, (iii), (iv), (5), (c)(1)(v), (2)(ii), (iii), (4), (5) introductory text, (iv), (6)(i), (8), (d), (f) introductory text, (1), (3) and (g) revised; (c) introductory text and (f)(2) amended; (c)(9) removed; interim; eff. 7–17–95 26524
(f) revised 40296
75.21 (d) and (e) added; interim; eff. 7–17–95 26527
(a) amended; (f) added; interim; eff. 7–17–95 through 12–31–96 26566
75.22 (a) introductory text, (5) and (6) revised; (b) and (c) added; interim; eff. 7–17–95 26528
75.23 Revised; interim; eff. 7–17–95 26528
75.24 (d) and (e) revised; interim; eff. 7–17–95 26528
75.30 Revised; interim; eff. 7–17–95 26528

40 CFR—Continued

60 FR Page

Chapter I—Continued

(d) and (e) added; interim; eff. 7–17–95 through 12–31–96 26566
75.31 (a), (b) and (c)(3) revised; interim; eff. 7–17–95 26529
75.32 (a) introductory text and (b) revised; (a)(1) and (2) amended; interim; eff. 7–17–95 26529
(a)(3) amended; (a)(4) added; interim; eff. 7–17–95 through 12–31–96 26567
75.33 (a) amended; (c)(5) added; interim; eff. 7–17–95 26529
75.34 Revised; interim; eff. 7–17–95 26567
75.35 Added; interim; eff. 7–17–95 26529
75.36 Added; interim; eff. 7–17–95 26530
75.41 (a)(1) amended; (b)(1)(i), (2)(iv)(A), (C), (c)(1)(i), (ii) and (2)(ii) revised; interim; eff. 7–17–95 26530
(a)(1), (b)(1)(i), (2)(iv)(A), (C), (c)(1)(i), (ii) and (2)(ii) revised 40296
75.47 Revised; interim; eff. 7–17–95 26531
Revised 40297
75.48 (a) introductory text and (1) revised; (b) and (c) added; interim; eff. 7–17–95 26531
Revised 40297
75.50 (a) revised; interim; eff. 7–17–95 through 12–31–95 26532
75.51 (e) added; interim; eff. 7–17–95 through 12–31–95 26532
75.52 (b) added; interim; eff. 7–17–95 through 12–31–95 26532
75.53 (a), (b), (c) introductory text, (1), (2)(ii), (4) introductory text, (ii), (vi), (5)(ii), (6) through (9), (d)(1) and (2) revised; (c)(10) and (d)(3) added; interim; eff. 7–17–95 26532
(d) introductory text revised; interim; eff. 7–17–95 26568
75.54 Added; interim; eff. 7–17–95 26533
75.55 Added; interim; eff. 7–17–95 26535
(b) and (e) added; interim; eff. in part 7–17–95 and in part 7–17–95 through 12–31–96 26568
75.56 Added; interim; eff. 7–17–95 26536

40 CFR—Continued

60 FR Page

Chapter I—Continued

(a)(6) added; interim; eff. 7–17–95 through 12–31–96 26569

75.60 (b)(1) and (2) revised; (c) added; interim; eff. 7–17–95 26538

75.61 Revised; interim; eff. 7–17–95 26538

75.62 (a) revised; (c) added; interim; eff. 7–17–95 26539

75.63 (a) and (b)(1) revised 17131

Revised; interim; eff. 7–17–95 26539

75.64 (a) introductory text and (e) introductory text amended; (a)(5), (b) and (d) revised; (e)(1) and (2) removed; interim; eff. 7–17–95 26540

(a)(1) and (c) revised; interim; eff. 7–17–95 26569

75.65 Revised; interim; eff. 7–17–95 26540

75.66 (a), (b), (c), (d), (e) and (f) redesignated as (b), (c), (d), (e), (f) and (i); new (a), (g) and (h) added; new (b), new (c) and new (i) revised; interim; eff. 7–17–95 26540

(e) and (f) revised; interim; eff. 7–17–95 26569

75.67 Revised 17131

(a) revised; interim; eff. 7–17–95 26541

75 Appendix A amended; interim; eff. 7–17–95 ..... 26541, 26544, 26545, 26546

Appendix A amended; interim; eff. 7–17–95 through 12–31–96 ..... 26569, 26570

Appendix A amended; interim; eff. in part 7–17–95 and in part 7–17–95 through 12–31–96 26570

Appendix B amended; interim; eff. 7–17–95 26546

Appendix B amended; interim; eff. in part 7–17–95 and in part 7–17–95 through 12–31–96 26571

Appendix C amended; interim; eff. 7–17–95 ..... 26547, 26548

Appendix D amended; interim; eff. 7–17–95 ..... 26548, 26551

Appendix D amended; interim; eff. in part 7–17–95 through 12–31–95 26548

Appendix E amended; interim; eff. 7–17–95 ..... 26551, 26553

Appendix F amended; interim; eff. 7–17–95 ..... 26553, 26554, 26555, 26556

40 CFR—Continued

60 FR Page

Chapter I—Continued

Appendix F amended; interim; eff. 7–17–95 through 12–31–95 ..... 26554, 26555, 26571

Appendix G amended; interim; eff. 7–17–95 ..... 26556, 26557

Appendix J amended; interim; eff. 7–17–95 26557

76 Revised 18761

77 Authority citation revised 17131

77.6 (a) revised 17131

78.1 (b)(3) and (4) revised; (b)(5) added 17132

78.3 (a)(1) introductory text and (d)(2) revised 17132

80 Announcement 32106

80.42 (c)(1) table revised 6032

80.70 (l) introductory text and (1) added 2696

(j) introductory text revised 2699, 35491

(l) removed 21725

80.75 (b)(2) heading and (ii)(D) through (G) revised; (b)(2)(ii)(H), (I) and (J) added 65574

80.91 (e)(7)(i)(A) and (C) revised; (e)(7)(i)(D) removed 6032

(e)(7)(iv) added 40008

80.93 (b)(6) revised 65575

80.101 (b)(1)(v) added 40008

80.105 (a)(4) revised 65575

1996

40 CFR

61 FR Page

Chapter I

73.70 (a) table revised; eff. 8–5–96 28763

73.72 Revised; eff. 8–5–96 28763

73.74 Removed; eff. 8–5–96 28763

73.75 Removed; eff. 8–5–96 28763

73.76 Removed; eff. 8–5–96 28763

73.77 Removed; eff. 8–5–96 28763

75.6 (e) revised 59157

75.11 Regulation at 60 FR 26566 confirmed; (a), (d) and (e) revised; (g) removed 59157

75.14 (c) revised 25581

75.15 (b)(1) amended 25582

75.16 (a)(2)(ii)(A) amended 25582

(a)(2)(ii)(B), (C) and (b)(2)(ii)(B) revised; (e)(5) added 59158

75.18 (b)(3) added 59158

40 CFR—Continued

61 FR Page

Chapter I—Continued

75.20 (b) introductory text and (g)(1)(i) revised 59158
75.21 (d) removed..... 25582
Regulation at 60 FR 26566 confirmed..... 59157
(a) revised; (d) added; (f) removed..... 59159
75.30 Regulation at 60 FR 26566 confirmed..... 59157
(d) revised..... 59160
75.32 Regulation at 60 FR 26567 confirmed..... 59157
(a)(3) revised; (a)(4) removed..... 59160
75.33 (c)(5) amended 25582
75.34 Regulation at 60 FR 26567 confirmed..... 59157
(a), (b) introductory text, (1), (c) introductory text and (d) revised 59160
75.50 (a) revised..... 25582
75.53 Regulation at 60 FR 26568 confirmed..... 59157
(d) introductory text revised; (d)(4) removed..... 59161
75.55 Regulation at 60 FR 26568 confirmed..... 59157
(b)(3) introductory text, (i), (ii) and (e) revised 59161
75.56 Regulation at 60 FR 26569 confirmed..... 59157
(c) revised; (d) added 59161
75.61 (a)(5) removed..... 25582
(a)(5) added 59162
75.64 Regulation at 60 FR 26569 confirmed..... 59157
75.66 Regulation at 60 FR 26569 confirmed..... 59157
(f)(2) revised..... 59162
75 Appendix A amended 25582
Appendixes D, F and G amended 25585
Regulations at 60 FR 26569, 26570 and 26571 confirmed 59157
Appendix A amended 59162
Appendix B amended 59165
Appendixes D and F amended 59166
76.2 Amended..... 67162
76.5 (g) removed 67162
Correctly removed..... 68821
76.6 Revised 67162
76.7 (a) and (b) added..... 67163
76.8 (a)(2), (5), (e)(3)(iii)(A) and (B) amended..... 67163
76.10 (f)(1)(iii) amended 67163

40 CFR—Continued

61 FR Page

Chapter I—Continued

76.16 Added 67163
76 Appendix B amended..... 67164
79.51 (c)(1)(ii)(A), (B), (h) introductory text and (1)(ii) revised; (e)(1) amended; (i)(4) added..... 36511
79.52 (b)(1)(iii), (iv), (2)(iii)(D) introductory text and (E) introductory text revised..... 36511
79.57 (b)(2)(i), (ii), (iii) and (e)(1)(i)(C) added; (e)(1)(iii)(A), (2)(i), (ii) introductory text, (B), (iii) introductory text, (C), (vi)(B), (vii), (3)(i)(A) and (f)(3) revised; (e)(3)(i) introductory text amended..... 36511
79.61 (d)(5) revised 36512, 58746
79.63 (e)(4)(iii) added 36513
79.68 (f)(1) and (5)(vi) revised..... 36513
80 Petition for reconsideration 35960
Petition for exemption..... 42812, 53854
80.2 (f) removed 3837
(vv) added 35680
80.4 Revised 35356
80.7 (a) introductory text revised; (c) amended..... 3837
80.20 Removed..... 3837
80.21 Removed..... 3837
80.22 Heading, (a), (f) introductory text and (2) introductory text revised; (b) added; (d), (e), (f)(1), (g), (h) and (i) removed 3837
(j) revised 33039
80.23 Introductory text, (b)(2)(ii) and (e)(1) revised; (e)(2) removed 3837
80.24 Introductory text, (a) and (c) removed; (b) revised..... 3838
Regulation at 61 FR 3838 in part withdrawn..... 8221
(b) revised; eff. 7–8–96 28766
80.25 Removed..... 3838
80.27 (a)(2) table amended..... 16396
80.41 (g) revised..... 12041
80.42 (c)(1) table revised; eff. 7–8–96..... 20738
80.46 (f)(3)(i) and (g)(9)(i) revised..... 58306
80.72 Added 35680

40 CFR—Continued

61 FR Page

Chapter I—Continued

80.79 (j) introductory text revised; (j)(5)(viii), (ix), (10)(i), (iii), (v) through (xi) and (11) removed; (j)(10)(ii), (iv), (12), (13) and (14) redesignated as (j)(10)(i), (ii), (11), (12) and (13); (l) added 35680
80.140 Amended 35356
80.141 (a), (b), (c)(1)(ii), (2), (3)(i), (d) and (e)(1) revised; (c)(1)(i), (e)(2)(ii)(B), (g)(1) and (3) amended; (c)(3)(iv) added; (e)(2)(ii)(B)(*1*)(*iii*) removed 35356
(c)(3)(v) added 58747
80.155 Revised 35358
80.156 (a)(1)(ii), (2) introductory text, (ii), (3) introductory text, (ii), (4), (5) introductory text, (c)(1) introductory text, (i), (3) and (4) revised; (c)(5) through (8) added 35358
80.157 Introductory text, (a), (b), (d), (e) and (f) revised; (d), (e) and (f) redesignated as (e), (f) and (g); new (d) added (OMB number pending) 35360
80.158 Revised 35362
80.160 Revised (OMB number pending) 35363
80.161 Added 35364
(b)(1)(ii)(D) added 58747
80.162 Added 35366
80.163 Added 35368
80.164 Added (OMB number pending) 35369
80.165 Added 35371
80.166 Added 35372
80.167 Added 35372
80.168 Added 35373
80.169 Added 35373
(g) redesignated as (c)(9); new (c)(9) heading and introductory text amended 58747
80.170 Added (OMB number pending) 35377
80.171 Added 35379
80.172 Added 35380
(e)(2) revised 58747
80.173 Added (OMB number pending) 35380
80.174 Added 35381

1997

(Regulations published from January 1, 1997, through July 1, 1997)

40 CFR

62 FR Page

73.20 (e)(4) revised; (f) added; eff. 8–8–97 34150
76.2 Regulation at 61 FR 67162 eff. date corrected to 2–17–97 3464
76.5 Regulation at 61 FR 67162 eff. date corrected to 2–17–97 3464
76.6 Regulation at 61 FR 67162 eff. date corrected to 2–17–97; (a)(2), (3) and (b) corrected 3464
(a) introductory text corrected 32040
76.7 Regulation at 61 FR 67163 eff. date corrected to 2–17–97 3464
76.10 Regulation at 61 FR 67163 eff. date corrected to 2–17–97 3464
76.16 Regulation at 61 FR 67163 eff. date corrected to 2–17–97; (c)(1) corrected 3464
76 Regulation at 61 FR 67164 eff. date corrected to 2–17–97; Appendix B corrected 3464
79.2 (d) and (e) revised; (k) added 12571
79.51 (c)(1)(ii) introductory text revised; (c)(1)(vi) and (vii) added 12575
79.52 (a) amended; (c) removed 12571
79.56 (e)(3)(i)(A)(*5*), (B), (ii)(A)(*5*), (B), (4)(ii)(A)(*3*) introductory text, (*i*), (B)(*1*), (*2*) introductory text, (*ii*), (*3*) introductory text, (*i*) revised; (e)(4)(ii)(B)(*2*)(*iv*) added 12571
79.58 (d)(1) amended; (d)(6) added 12571
79.59 (c)(4)(iii) and (7)(iii) removed 12572
(c) introductory text amended 12576
80 Authority citation revised 7167
80.68 (c)(13)(iii)(B) revised 12576
80.70 (m) added 7167
(m) removed 16084
(m) added; eff. 7–3–97 30270
80.91 (e)(7)(i) revised; (e)(7)(iv) removed; (e)(8) and (9) added 9883
80.101 (b)(1)(v) removed 9884
80.157 OMB number 23362
80.160 OMB number 23362

40 CFR—Continued

62 FR Page

80.164 OMB number 23362
80.170 OMB number 23362

40 CFR—Continued

62 FR Page

80.173 OMB number 23362

○