AUTHENTICATED
U.S. GOVERNMENT
INFORMATION
GPO

code of federal regulations

Transportation

49

PARTS 100 TO 185

Revised as of October 1, 1997

CONTAINING
A CODIFICATION OF DOCUMENTS
OF GENERAL APPLICABILITY
AND FUTURE EFFECT

AS OF OCTOBER 1, 1997

With Ancillaries

Published by
the Office of the Federal Register
National Archives and Records
Administration

as a Special Edition of
the Federal Register

U.S. GOVERNMENT PRINTING OFFICE
WASHINGTON : 1997

For sale by U.S. Government Printing Office
Superintendent of Documents, Mail Stop: SSOP, Washington, DC 20402–9328

Table of Contents

	Page
Explanation	v
Title 49:	
Subtitle B—Other Regulations Relating to Transportation:	
Chapter I—Research and Special Programs Administration, Department of Transportation	5
Finding Aids:	
Material Approved for Incorporation by Reference	1015
Table of CFR Titles and Chapters	1025
Alphabetical List of Agencies Appearing in the CFR	1041
List of CFR Sections Affected	1051

Cite this Code: CFR

To cite the regulations in this volume use title, part and section number. Thus, 49 CFR 106.1 *refers to title 49, part 106, section 1.*

Explanation

The Code of Federal Regulations is a codification of the general and permanent rules published in the Federal Register by the Executive departments and agencies of the Federal Government. The Code is divided into 50 titles which represent broad areas subject to Federal regulation. Each title is divided into chapters which usually bear the name of the issuing agency. Each chapter is further subdivided into parts covering specific regulatory areas.

Each volume of the Code is revised at least once each calendar year and issued on a quarterly basis approximately as follows:

Title 1 through Title 16.....as of January 1
Title 17 through Title 27.....as of April 1
Title 28 through Title 41.....as of July 1
Title 42 through Title 50.....as of October 1

The appropriate revision date is printed on the cover of each volume.

LEGAL STATUS

The contents of the Federal Register are required to be judicially noticed (44 U.S.C. 1507). The Code of Federal Regulations is prima facie evidence of the text of the original documents (44 U.S.C. 1510).

HOW TO USE THE CODE OF FEDERAL REGULATIONS

The Code of Federal Regulations is kept up to date by the individual issues of the Federal Register. These two publications must be used together to determine the latest version of any given rule.

To determine whether a Code volume has been amended since its revision date (in this case, October 1, 1997), consult the ''List of CFR Sections Affected (LSA),'' which is issued monthly, and the ''Cumulative List of Parts Affected,'' which appears in the Reader Aids section of the daily Federal Register. These two lists will identify the Federal Register page number of the latest amendment of any given rule.

EFFECTIVE AND EXPIRATION DATES

Each volume of the Code contains amendments published in the Federal Register since the last revision of that volume of the Code. Source citations for the regulations are referred to by volume number and page number of the Federal Register and date of publication. Publication dates and effective dates are usually not the same and care must be exercised by the user in determining the actual effective date. In instances where the effective date is beyond the cutoff date for the Code a note has been inserted to reflect the future effective date. In those instances where a regulation published in the Federal Register states a date certain for expiration, an appropriate note will be inserted following the text.

OMB CONTROL NUMBERS

The Paperwork Reduction Act of 1980 (Pub. L. 96–511) requires Federal agencies to display an OMB control number with their information collection request.

Many agencies have begun publishing numerous OMB control numbers as amendments to existing regulations in the CFR. These OMB numbers are placed as close as possible to the applicable recordkeeping or reporting requirements.

OBSOLETE PROVISIONS

Provisions that become obsolete before the revision date stated on the cover of each volume are not carried. Code users may find the text of provisions in effect on a given date in the past by using the appropriate numerical list of sections affected. For the period before January 1, 1986, consult either the List of CFR Sections Affected, 1949–1963, 1964–1972, or 1973–1985, published in seven separate volumes. For the period beginning January 1, 1986, a ''List of CFR Sections Affected'' is published at the end of each CFR volume.

INCORPORATION BY REFERENCE

What is incorporation by reference? Incorporation by reference was established by statute and allows Federal agencies to meet the requirement to publish regulations in the Federal Register by referring to materials already published elsewhere. For an incorporation to be valid, the Director of the Federal Register must approve it. The legal effect of incorporation by reference is that the material is treated as if it were published in full in the Federal Register (5 U.S.C. 552(a)). This material, like any other properly issued regulation, has the force of law.

What is a proper incorporation by reference? The Director of the Federal Register will approve an incorporation by reference only when the requirements of 1 CFR part 51 are met. Some of the elements on which approval is based are:

(a) The incorporation will substantially reduce the volume of material published in the Federal Register.

(b) The matter incorporated is in fact available to the extent necessary to afford fairness and uniformity in the administrative process.

(c) The incorporating document is drafted and submitted for publication in accordance with 1 CFR part 51.

Properly approved incorporations by reference in this volume are listed in the Finding Aids at the end of this volume.

What if the material incorporated by reference cannot be found? If you have any problem locating or obtaining a copy of material listed in the Finding Aids of this volume as an approved incorporation by reference, please contact the agency that issued the regulation containing that incorporation. If, after contacting the agency, you find the material is not available, please notify the Director of the Federal Register, National Archives and Records Administration, Washington DC 20408, or call (202) 523–4534.

CFR INDEXES AND TABULAR GUIDES

A subject index to the Code of Federal Regulations is contained in a separate volume, revised annually as of January 1, entitled CFR INDEX AND FINDING AIDS. This volume contains the Parallel Table of Statutory Authorities and Agency Rules (Table I), and Acts Requiring Publication in the Federal Register (Table II). A list of CFR titles, chapters, and parts and an alphabetical list of agencies publishing in the CFR are also included in this volume.

An index to the text of ''Title 3—The President'' is carried within that volume.

The Federal Register Index is issued monthly in cumulative form. This index is based on a consolidation of the ''Contents'' entries in the daily Federal Register.

A List of CFR Sections Affected (LSA) is published monthly, keyed to the revision dates of the 50 CFR titles.

REPUBLICATION OF MATERIAL

There are no restrictions on the republication of material appearing in the Code of Federal Regulations.

INQUIRIES

For a legal interpretation or explanation of any regulation in this volume, contact the issuing agency. The issuing agency's name appears at the top of odd–numbered pages.

For inquiries concerning CFR reference assistance, call 202–523–5227 or write to the Director, Office of the Federal Register, National Archives and Records Administration, Washington, DC 20408.

SALES

The Government Printing Office (GPO) processes all sales and distribution of the CFR. For payment by credit card, call 202–512–1800, M–F, 8 a.m. to 4 p.m. e.s.t. or fax your order to 202–512–2233, 24 hours a day. For payment by check, write to the Superintendent of Documents, Attn: New Orders, P.O. Box 371954, Pittsburgh, PA 15250–7954. For GPO Customer Service call 202–512–1803.

RAYMOND A. MOSLEY,
Director,
Office of the Federal Register.

October 1, 1997.

THIS TITLE

Title 49—TRANSPORTATION is composed of seven volumes. The parts in these volumes are arranged in the following order: Parts 1–99, parts 100–185, parts 186–199, parts 200–399, parts 400–999, parts 1000–1199, part 1200 to End. The first volume (parts 1–99) contains current regulations issued under subtitle A—Office of the Secretary of Transportation; the second volume (parts 100–185) and the third volume (parts 186–199) contain the current regulations issued under chapter I—Research and Special Programs Administration (DOT); the fourth volume (parts 200–399) contains the current regulations issued under chapter II—Federal Railroad Administration (DOT), and chapter III—Federal Highway Administration (DOT); the fifth volume (parts 400–999) contains the current regulations issued under chapter IV—Coast Guard (DOT), chapter V—National Highway Traffic Safety Administration (DOT), chapter VI—Federal Transit Administration (DOT), chapter VII—National Railroad Passenger Corporation (AMTRAK), and chapter VIII—National Transportation Safety Board; the sixth volume (parts 1000–1199) and the seventh volume (part 1200 to End) both contain current regulations issued under chapter X—Surface Transportation Board, Department of Transportation. The contents of these volumes represent all current regulations codified under this title of the CFR as of October 1, 1997.

In the volume containing parts 100–185, see §172.101 for the Hazardous Materials Table, and §172.102 for the Optional Hazardous Materials Table. The Federal Motor Vehicle Safety Standards appear in part 571.

Redesignation tables for chapter X—Surface Transportation Board, Department of Transportation appear in the Finding Aids section of the sixth and seventh volumes.

For this volume Christopher R. Choate was the Chief Editor. The Code of Federal Regulations publication program is under the direction of Frances D. McDonald, assisted by Alomha S. Morris.

Would you like to know. . .

if any changes have been made to the *Code of Federal Regulations* or what documents have been published in the *Federal Register* without reading the *Federal Register* every day? If so, you may wish to subscribe to the *LSA* (List of CFR Sections Affected), the *Federal Register Index,* or both.

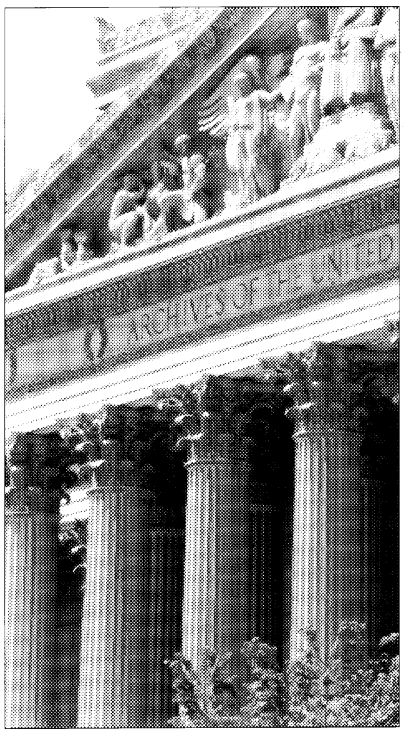

LSA

The *LSA* (List of CFR Sections Affected) is designed to lead users of the *Code of Federal Regulations* to amendatory actions published in the *Federal Register*. The *LSA* is issued monthly in cumulative form. Entries indicate the nature of the changes—such as revised, removed, or corrected.
$27 per year.

Federal Register Index

The index, covering the contents of the daily *Federal Register,* is issued monthly in cumulative form. Entries are carried primarily under the names of the issuing agencies. Significant subjects are carried as cross-references.
$25 per year.

A finding aid is included in each publication which lists *Federal Register* page numbers with the date of publication in the *Federal Register.*

Superintendent of Documents Subscription Order Form

Order Processing Code:
***5421**

❑ **YES,** send me the following indicated subscriptions for one year:

____ **LSA (List of CFR Sections Affected),** (LCS) for $27 per year.

____ **Federal Register Index** (FRSU) $25 per year.

The total cost of my order is $ _____
Price is subject to change. International customers please add 25%.

(Includes regular shipping and handling.)

For privacy check box below:

❑ Do not make my name available to other mailers

Check method of payment:

❑ Check payable to Superintendent of Documents

❑ GPO Deposit Account ☐☐☐☐☐☐☐ — ☐

❑ VISA ❑ MasterCard ☐☐☐☐ (expiration date)

Company or personal name

Street address

City, State, ZIP code

Daytime phone with area code

Purchase order No. (optional)

Credit card No. (must be 20 digits)

Thank you for your order!

Authorizing signature 1/97

Fax your orders (202) 512–2250
Phone your orders (202) 512–1800

Mail To: Superintendent of Documents
PO Box 371954
Pittsburgh PA 15250–7954

Title 49—Transportation

(This book contains parts 100 to 185)

Part

SUBTITLE B—OTHER REGULATIONS RELATING TO TRANSPORTATION:

CHAPTER I—Research and Special Programs Administration, Department of Transportation 106

Subtitle B—Other Regulations Relating to Transportation

CHAPTER I—RESEARCH AND SPECIAL PROGRAMS ADMINISTRATION, DEPARTMENT OF TRANSPORTATION

SUBCHAPTER A—HAZARDOUS MATERIALS AND OIL TRANSPORTATION

Part		*Page*
106	Rulemaking procedures	0
107	Hazardous materials program procedures	0
110	Hazardous materials public sector training and planning grants	0

SUBCHAPTER B—OIL TRANSPORTATION

130	Oil spill prevention and response plans	0

SUBCHAPTER C—HAZARDOUS MATERIALS REGULATIONS

171	General information, regulations, and definitions	0
172	Hazardous materials table, special provisions, hazardous materials communications, emergency response information, and training requirements	0
173	Shippers—general requirements for shipments and packagings	0
174	Carriage by rail	0
175	Carriage by aircraft	0
176	Carriage by vessel	0
177	Carriage by public highway	0
178	Specifications for packagings	0
179	Specifications for tank cars	0
180	Continuing qualification and maintenance of packagings	0

SUBCHAPTER A—HAZARDOUS MATERIALS AND OIL TRANSPORTATION

PART 106—RULEMAKING PROCEDURES

Subpart A—General

Sec.
106.1 Scope.
106.3 Delegations.
106.5 Regulatory dockets.
106.7 Records.
106.9 Where to file petitions.

Subpart B—Procedures for Adoption of Rules

106.11 General.
106.13 Initiation of rulemaking.
106.15 Contents of notices of proposed rulemaking.
106.17 Participation by interested persons.
106.19 Petitions for extension of time to comment.
106.21 Contents of written comments.
106.23 Consideration of comments received.
106.25 Additional rulemaking proceedings.
106.27 Hearings.
106.29 Adoption of final rules.
106.31 Petitions for rulemaking.
106.33 Processing of petition.
106.35 Petitions for reconsideration.
106.37 Proceedings on petitions for reconsideration.
106.38 Appeals.
106.39 Direct final rulemaking.

AUTHORITY: 49 U.S.C. 5101–5127; 49 CFR 1.53.

SOURCE: 40 FR 31768, July 29, 1975, unless otherwise noted. Redesignated by Amdt. 102–1, and Amdt. 106–1, 43 FR 43306, Sept. 25, 1978.

Subpart A—General

§ 106.1 Scope.

This part prescribes general rulemaking procedures for the issue, amendment, and repeal of Hazardous Material Safety Program regulations of the Research and Special Programs Administration of the Department of Transportation.

[40 FR 31768, July 29, 1975. Redesignated by Amdt. 102–1, and Amdt. 106–1, 43 FR 43306, Sept. 25, 1978, as amended by Amdt. 106–13, 61 FR 51336, Oct. 1, 1996]

§ 106.3 Delegations.

For the purposes of this part, ''Administrator'' means the Administrator, Research and Special Programs Administration, or his or her delegate.

[Amdt. 106–13, 61 FR 51336, Oct. 1, 1996]

§ 106.5 Regulatory dockets.

(a) Information and data considered relevant by the Administrator relating to rulemaking actions, including notices of proposed rulemaking; comments received in response to notices; petitions for rulemaking and reconsideration; denials of petitions for rulemaking and reconsideration; records of additional rulemaking proceedings under § 106.25; and final regulations are maintained by the Research and Special Programs Administration at 400 7th Street, SW., Washington, DC 20590–0001.

(b) Any person may examine any docketed material at the offices of the Research and Special Programs Administration at any time during regular business hours after the docket is established, except material which the Administrator determines should be withheld from public disclosure under applicable provisions of any statute administered by the Administrator and Section 552(b) of title 5, United States Code, and may obtain a copy of it upon payment of a fee.

[40 FR 31768, July 29, 1975. Redesignated by Amdts. 102–1 and 106–1, 43 FR 43306, Sept. 25, 1978, and amended by Amdt. 106–3, 45 FR 81571, Dec. 11, 1980; Amdt. 106–7, 55 FR 39978, Oct. 1, 1990]

§ 106.7 Records.

Records of the Research and Special Programs Administration relating to rulemaking proceedings are available for inspection as provided in section 552(b) of title 5, United States Code, and part 7 of the Regulations of the Office of the Secretary of Transportation (part 7 of this title).

§ 106.9 Where to file petitions.

Petitions for extension of time to comment submitted under § 106.19, petitions for hearings submitted under § 106.27, petitions for rulemaking submitted under § 106.31, and petitions for

reconsideration submitted under § 106.35 must be submitted to: Administrator, Research and Special Programs Administration, U.S. Department of Transportation, 400 7th Street, SW., Washington, DC 20590–0001.

[40 FR 31768, July 29, 1975. Redesignated by Amdts. 102–1 and 106–1, 43 FR 43306, Sept. 25, 1978, and amended by Amdt. 106–3, 45 FR 81571, Dec. 11, 1980; Amdt. 106–7, 55 FR 39978, Oct. 1, 1990]

Subpart B—Procedures for Adoption of Rules

§ 106.11 General.

Unless the Administrator, for good cause, finds that notice is impracticable, unnecessary, or contrary to the public interest, and incorporates that finding and a brief statement of the reasons for it in the rule, a notice of proposed rulemaking is issued and interested persons are invited to participate in the rulemaking proceedings with respect to each substantive rule.

§ 106.13 Initiation of rulemaking.

The Administrator initiates rulemaking on his or her own motion; however, in so doing, the Administrator may use discretion to consider the recommendations of other agencies of the United States or of other interested persons, including those of any technical advisory body established by statute for that purpose.

[Amdt. 106–13, 61 FR 51336, Oct. 1, 1996]

§ 106.15 Contents of notices of proposed rulemaking.

(a) Each notice of proposed rulemaking is published in the FEDERAL REGISTER, unless all persons subject to it are named and are personally served with a copy of it.

(b) Each notice, whether published in the FEDERAL REGISTER or personally served, includes:

(1) A statement of the time, place, and nature of the proposed rulemaking proceeding;

(2) A reference to the authority under which it is issued;

(3) A description of the subjects and issues involved or the substance and terms of the proposed regulation;

(4) A statement of the time within which written comments must be submitted; and

(5) A statement of how and to what extent interested persons may participate in the proceeding.

§ 106.17 Participation by interested persons.

(a) Any interested person may participate in rulemaking proceedings by submitting comments in writing containing information, views or arguments in accordance with instructions for participation in the rulemaking document.

(b) The Administrator may invite any interested person to participate in the rulemaking proceedings described in § 106.25.

(c) For the purposes of this part, an interested person includes any Federal or State government agency or any political subdivision of a State (as defined in § 107.201(b) of this subchapter).

[40 FR 31768, July 29, 1975. Redesignated by Amdt. 102–1, and Amdt. 106–1, 43 FR 43306, Sept. 25, 1978, and amended by Amdt. 106–4, 48 FR 2651, Jan. 20, 1983; Amdt. 106–11, 61 FR 30180, June 14, 1996; Amdt. 106–13, 61 FR 51336, Oct. 1, 1996]

§ 106.19 Petitions for extension of time to comment.

A petition for extension of the time to submit comments must be received not later than 10 days before expiration of the time stated in the notice. It is requested, but not required, that three copies be submitted. The filing of the petition does not automatically extend the time for petitioner's comments. A petition is granted only if the petitioner shows good cause for the extension, and if the extension is consistent with the public interest. If an extension is granted, it is granted to all persons, and it is published in the FEDERAL REGISTER.

§ 106.21 Contents of written comments.

All written comments must be in English. It is requested, but not required, that five copies be submitted. Any interested person should submit as part of written comments all material considered relevant to any statement of fact. Incorporation of material by reference should be avoided; however,

where necessary, such incorporated material shall be identified by document title and page.

[Amdt. 106–13, 61 FR 51336, Oct. 1, 1996]

§ 106.23 Consideration of comments received.

All timely comments and the recommendations of any technical advisory body established by statute for the purpose of reviewing the proposed rule concerned are considered before final action is taken on a rulemaking proposal. Late filed comments are considered so far as practicable.

§ 106.25 Additional rulemaking proceedings.

The Administrator may initiate any further rulemaking proceedings that the Administrator finds necessary or desirable. For example, interested persons may be invited to make oral arguments, to participate in conferences between the Administrator or the Administrator's representative and interested persons at which minutes of the conference are kept, to appear at informal hearings presided over by officials designated by the Administrator at which a transcript of minutes are kept, or participate in any other proceeding to assure informed administrative action and to protect the public interest.

[40 FR 31768, July 29, 1975. Redesignated by Amdt. 102–1, and Amdt. 106–1, 43 FR 43306, Sept. 25, 1978, as amended by Amdt. 106–13, 61 FR 51336, Oct. 1, 1996]

§ 106.27 Hearings.

(a) If a notice of proposed rulemaking does not provide for a hearing, any interested person may petition the Administrator for an informal hearing. The petition must be received by the Administrator not later than 20 days before expiration of the time stated in the notice. The filing of the petition does not automatically result in the scheduling of a hearing. A petition is granted only if the petitioner shows good cause for a hearing. If a petition for a hearing is granted, notice of the hearing is published in the FEDERAL REGISTER.

(b) Sections 556 and 557 of title 5, United States Code, do not apply to hearings held under this part. Unless otherwise specified, hearings held under this part are informal, nonadversary, fact-finding proceedings, at which there are not formal pleadings or adverse parties. Any regulation issued in a case in which an informal hearing is held is not necessarily based exclusively on the record of the hearing.

(c) The Administrator designates a representative to conduct any hearing held under this part. The Chief Counsel designates a member of his or her staff to serve as legal officer at the hearing.

[40 FR 31768, July 29, 1975. Redesignated by Amdt. 102–1, and Amdt. 106–1, 43 FR 43306, Sept. 25, 1978, as amended by Amdt. 106–13, 61 FR 51336, Oct. 1, 1996]

§ 106.29 Adoption of final rules.

Final rules are prepared by representatives of the Office of Hazardous Materials Safety concerned and the Office of the Chief Counsel. The regulation is then submitted to the Administrator for consideration. If the Administrator adopts the regulation, it is published in the FEDERAL REGISTER, unless all persons subject to it are named and are personally served with a copy of it.

[40 FR 31768, July 29, 1975. Redesignated by Amdt. 102–1, and Amdt. 106–1, 43 FR 43306, Sept. 25, 1978, as amended by Amdt. 106–13, 61 FR 51336, Oct. 1, 1996]

§ 106.31 Petitions for rulemaking.

(a) Any interested person may petition the Associate Administrator for Hazardous Materials Safety to establish, amend, or repeal a substantive regulation, or may petition the Chief Counsel to establish, amend, or repeal a procedural regulation in parts 106 or 107.

(b) Each petition filed under this section must—

(1) Summarize the proposed action and explain its purpose;

(2) State the text of the proposed rule or amendment, or specify the rule proposed to be repealed;

(3) Explain the petitioner's interest in the proposed action and the interest of any party the petitioner represents; and

(4) Provide information and arguments that support the proposed action, including relevant technical, scientific or other data as available to the petitioner, and any specific known

cases that illustrate the need for the proposed action.

(c) If the potential impact of the proposed action is substantial, and information and data related to that impact are available to the petitioner, the Associate Administrator for Hazardous Materials Safety or the Chief Counsel may request the petitioner to provide—

(1) The costs and benefits to society and identifiable groups within society, quantifiable and otherwise;

(2) The direct effects (including preemption effects) of the proposed action on States, on the relationship between the Federal Government and the States, and on the distribution of power and responsibilities among the various levels of government;

(3) The regulatory burden on small businesses, small organizations and small governmental jurisdictions;

(4) The recordkeeping and reporting requirements and to whom they would apply; and

(5) Impacts on the quality of the natural and social environments.

(d) The Associate Administrator for Hazardous Materials Safety or Chief Counsel may return a petition that does not comply with the requirements of this section, accompanied by a written statement indicating the deficiencies in the petition.

[Amdt. 106–11, 61 FR 30180, June 14, 1996, as amended by Amdt. 106–13, 61 FR 51336, Oct. 1, 1996]

§ 106.33 Processing of petition.

(a) *General.* Unless the Associate Administrator or the Chief Counsel otherwise specifies, no public hearing, argument, or other proceeding is held directly on a petition before its disposition under this section.

(b) *Grants.* If the Associate Administrator or the Chief Counsel determines that the petition contains adequate justification, he or she initiates rulemaking action under this subpart.

(c) *Denials.* If the Associate Administrator or the Chief Counsel determines that the petition does not justify rulemaking, the petition is denied.

(d) *Notification.* The Associate Administrator or the Chief Counsel will notify a petitioner, in writing, of the decision to grant or deny a petition for rulemaking.

[40 FR 31768, July 29, 1975. Redesignated by Amdt. 102–1, and Amdt. 106–1, 43 FR 43306, Sept. 25, 1978, as amended by Amdt. 106–11, 61 FR 30181, June 14, 1996; Amdt. 106–13, 61 FR 51336, Oct. 1, 1996]

§ 106.35 Petitions for reconsideration.

(a) Except as provided in § 106.39(d), any interested person may petition the Associate Administrator for reconsideration of any regulation issued under this part, or may petition the Chief Counsel for reconsideration of any procedural regulation issued under this part and contained in this part or in Part 107 of this Chapter. It is requested, but not required, that three copies be submitted. The petition must be received not later than 30 days after publication of the rule in the FEDERAL REGISTER. Petitions filed after that time will be considered as petitions filed under § 106.31. The petition must contain a brief statement of the complaint and an explanation as to why compliance with the rule is not practicable, is unreasonable, or is not in the public interest.

(b) If the petitioner requests the consideration of additional facts, the petitioner must state the reason they were not presented to the Associate Administrator or the Chief Counsel within the prescribed time.

(c) The Associate Administrator or the Chief Counsel does not consider repetitious petitions.

(d) Unless the Associate Administrator or the Chief Counsel otherwise provides, the filing of a petition under this section does not stay the effectiveness of the rule.

[40 FR 31768, July 29, 1975. Redesignated by Amdt. 102–1, and Amdt. 106–1, 43 FR 43306, Sept. 25, 1978, as amended by Amdt. 106–11, 61 FR 30181, June 14, 1996; Amdt. 106–13, 61 FR 51337, Oct. 1, 1996]

§ 106.37 Proceedings on petitions for reconsideration.

(a) The Associate Administrator or the Chief Counsel may grant or deny, in whole or in part, any petition for reconsideration without further proceedings, except where a grant of the petition would result in issuance of a new

final rule. In the event that the Associate Administrator or the Chief Counsel determines to reconsider any regulation, a final decision on reconsideration may be issued without further proceedings, or an opportunity to submit comment or information and data as deemed appropriate may be provided. Whenever the Associate Administrator or the Chief Counsel determines that a petition should be granted or denied, the Office of the Chief Counsel prepares a notice of the grant or denial of a petition for reconsideration, for issuance to the petitioner, and the Associate Administrator or the Chief Counsel issues it to the petitioner. The Associate Administrator or the Chief Counsel may consolidate petitions relating to the same rules.

(b) It is the policy of the Associate Administrator or the Chief Counsel to issue notice of the action taken on a petition for reconsideration within 90 days after the date on which the regulation in question is published in the FEDERAL REGISTER, unless it is found impracticable to take action within that time. In cases where it is so found and the delay beyond that period is expected to be substantial, notice of that fact and the date by which it is expected that action will be taken is issued to the petitioner and published in the FEDERAL REGISTER.

[40 FR 31768, July 29, 1975. Redesignated by Amdt. 102–1, and Amdt. 106–1, 43 FR 43306, Sept. 25, 1978, as amended by Amdt. 106–11, 61 FR 30181, June 14, 1996; Amdt. 106–13, 61 FR 51337, Oct. 1, 1996]

§106.38 Appeals.

(a) Any interested person may appeal a decision of the Associate Administrator or the Chief Counsel, issued under §106.33 or §106.37, to the Administrator.

(b) An appeal must be received within 20 days of service of written notice to petitioner of the Associate Administrator's or the Chief Counsel's decision, or within 20 days from the date of publication of the decision in the FEDERAL REGISTER, and should set forth the contested aspects of the decision as well as any new arguments or information.

(c) It is requested, but not required, that three copies of the appeal be submitted to the Administrator.

(d) Unless the Administrator otherwise provides, the filing of an appeal under this section does not stay the effectiveness of any rule.

[Amdt. 106–11, 61 FR 30181, June 14, 1996]

§106.39 Direct final rulemaking.

(a) Where practicable, the Administrator will use direct final rulemaking to issue the following types of rules:

(1) Minor, substantive changes to regulations;

(2) Incorporation by reference of the latest edition of technical or industry standards;

(3) Extensions of compliance dates; and

(4) Other noncontroversial rules where the Administrator determines that use of direct final rulemaking is in the public interest, and that a regulation is unlikely to result in adverse comment.

(b) The direct final rule will state an effective date. The direct final rule will also state that unless an adverse comment or notice of intent to file an adverse comment is received within the specified comment period, generally 60 days after publication of the direct final rule in the FEDERAL REGISTER, the Administrator will issue a confirmation document, generally within 15 days after the close of the comment period, advising the public that the direct final rule will either become effective on the date stated in the direct final rule or at least 30 days after the publication date of the confirmation document, whichever is later.

(c) For purposes of this section, an adverse comment is one which explains why the rule would be inappropriate, including a challenge to the rule's underlying premise or approach, or would be ineffective or unacceptable without a change. Comments that are frivolous or insubstantial will not be considered adverse under this procedure. A comment recommending a rule change in addition to the rule will not be considered an adverse comment, unless the commenter states why the rule would be ineffective without the additional change.

(d) Only parties who filed comments to a direct final rule issued under this section may petition under §106.35 for

reconsideration of that direct final rule.

(e) If an adverse comment or notice of intent to file an adverse comment is received, a timely document will be published in the FEDERAL REGISTER advising the public and withdrawing the direct final rule in whole or in part. The Administrator may then incorporate the adverse comment into a subsequent direct final rule or may publish a notice of proposed rulemaking. A notice of proposed rulemaking will provide an opportunity for public comment, generally a minimum of 60 days, and will be processed in accordance with §§106.11–106.29.

[Amdt. 106–11, 61 FR 30181, June 14, 1996]

PART 107—HAZARDOUS MATERIALS PROGRAM PROCEDURES

Subpart A—General Provisions

Sec.
107.1 Purpose and scope.
107.3 Definitions.
107.5 Request for confidential treatment.
107.7 Service of process on non-residents of the United States.
107.9 Public docket room.
107.11 Service.
107.13 Subpoenas, witness fees.
107.14 Availability of informal guidance and interpretive assistance.

Subpart B—Exemptions

107.101 Purpose and scope.
107.105 Application for exemption.
107.107 Application for party status.
107.109 Application for renewal.
107.111 Withdrawal.
107.113 Application processing and evaluation.
107.117 Emergency processing.
107.121 Modification, suspension or termination of exemption or grant of party status.
107.123 Reconsideration.
107.125 Appeal.
107.127 Availability of documents for public inspection.

Subpart C—Preemption

107.201 Purpose and scope.
107.202 Standards for determining preemption.

PREEMPTION DETERMINATIONS

107.203 Application.
107.205 Notice.
107.207 Processing.
107.209 Determination.
107.211 Petition for reconsideration.
107.213 Judicial review.

WAIVER OF PREEMPTION DETERMINATIONS

107.215 Application.
107.217 Notice.
107.219 Processing.
107.221 Determination.
107.223 Petition for reconsideration.
107.227 Judicial Review.

Subpart D—Enforcement

107.301 Delegated authority for enforcement.
107.303 Purpose and scope.
107.305 Investigations.

COMPLIANCE ORDERS AND CIVIL PENALTIES

107.307 General.
107.309 Warning letters.
107.310 Ticketing.
107.311 Notice of probable violation.
107.313 Reply.
107.315 Admission of violations.
107.317 Informal response.
107.319 Request for a hearing.
107.321 Hearing.
107.323 ALJ's decision.
107.325 Appeals.
107.327 Compromise and settlement.
107.329 Maximum penalties.
107.331 Assessment considerations.

CRIMINAL PENALTIES

107.333 Criminal penalties generally.
107.335 Referral for prosecution.
107.336 Limitation on fines and penalties.

INJUNCTIVE ACTION

107.337 Injunctions generally.
107.339 Imminent hazards.

APPENDIX A TO SUBPART D OF PART 107—GUIDELINES FOR CIVIL PENALTIES

Subpart E—Designation of Approval and Certification Agencies

107.401 Purpose and scope.
107.402 Application for designation as an approval or certification agency.
107.403 Designation of approval agencies.
107.404 Conditions of designation.
107.405 Termination of designation.

Subpart F—Registration of Cargo Tank and Cargo Tank Motor Vehicle Manufacturers and Repairers and Cargo Tank Motor Vehicle Assemblers

107.501 Scope.
107.502 General registration requirements.
107.503 Registration statement.
107.504 Period of registration, updates, and record retention.

Subpart G—Registration of Persons Who Offer or Transport Hazardous Materials

107.601 Applicability.
107.606 Exceptions.
107.608 General registration requirements.
107.612 Amount of fee.
107.616 Payment procedures.
107.620 Recordkeeping requirements.

Subpart H—Approvals, Registrations and Submissions

107.701 Purpose and scope.
107.705 Registrations, reports, and applications for approval.
107.709 Processing of an application for approval, including an application for renewal or modification.
107.711 Withdrawal.
107.713 Approval modification, suspension or termination.
107.715 Reconsideration.
107.717 Appeal.

AUTHORITY: 49 U.S.C. 5101–5127, 44701; Sec. 212–213, Pub. L. 104–121, 110 Stat. 857; 49 CFR 1.45, 1.53.

Subpart A—General Provisions

§107.1 Purpose and scope.

(a) This part prescribes procedures utilized by the Research and Special Programs Administration, the Associate Administrator for Hazardous Materials Safety and the Office of Chief Counsel in carrying out their duties under the laws pertaining to the transportation of hazardous materials.

(b) This subpart defines certain terms and prescribes procedures that are applicable to each proceeding described in this part.

[40 FR 48470, Oct. 15, 1975, as amended by Amdt. 107–4, 43 FR 43307, Sept. 25, 1978; Amdt. 107–23, 56 FR 66156, Dec. 20, 1991]

§107.3 Definitions.

All terms defined in 49 U.S.C. 5102 are used in their statutory meaning. Other terms used in this part are defined as follows:

Acting knowingly means acting or failing to act while

(1) Having actual knowledge of the facts giving rise to the violation, or

(2) Having the knowledge that a reasonable person acting in the same circumstances and exercising due care would have had.

Administrator means the Administrator, Research and Special Programs Administration.

Applicant means the person in whose name an exemption, approval, registration, a renewed or modified exemption or approval, or party status to an exemption is requested to be issued.

Application means a request under subpart B of this part for an exemption, a renewal or modification of an exemption, party status to an exemption, or a request under subpart H of this part for an approval, or renewal or modification of an approval.

Approval means a written authorization, including a competent authority approval, from the Associate Administrator to perform a function for which prior authorization by the Associate Administrator is required under subchapter C of this chapter.

Approval Agency means an organization or a person designated by the RSPA to certify packagings as having been designed, manufactured, tested, modified, marked or maintained in compliance with applicable DOT regulations.

Associate Administrator means the Associate Administrator for Hazardous Materials Safety, Research and Special Programs Administration.

Competent Authority means a national agency responsible under its national law for the control or regulation of a particular aspect of the transportation of hazardous materials (dangerous goods). The term *Appropriate authority*, as used in the ICAO Technical Instructions, has the same meaning as *Competent Authority*. The Associate Administrator for Hazardous Materials Safety, Research and Special Programs Administration, is the United States Competent Authority for purposes of this part.

Competent Authority Approval means an approval by the competent authority which is required under the provisions of an international standard, such as the International Civil Aviation Organization's Technical Instructions for the Safe Transport of Dangerous Goods by Air or the International Maritime Dangerous Goods Code. To the extent that it satisfies the requirement of the international standard, any of the following may serve as

a competent authority approval: a specific regulation of this subchapter or subchapter C of this chapter, an exemption or approval issued under the provisions of this subchapter or subchapter C of this chapter, or a separate document issued to one or more persons by the Associate Administrator.

Exemption means a document issued under the authority of 49 U.S.C. 5117 by the Associate Administrator that authorizes a person to perform a function that is not otherwise authorized under this subchapter, subchapter C, or other regulations issued under 49 U.S.C. 5101–5127 (e.g., Federal Highway Administration routing).

Federal hazardous material transportation law means 49 U.S.C. 5101 *et seq.*

Filed means received at the Research and Special Programs Administration office designated in the applicable provision or, if no office is specified, at the Office of Hazardous Materials Exemptions and Approvals (DHM–30), Research and Special Programs Administration, U.S. Department of Transportation, 400 7th Street SW., Washington DC, 20590–0001.

Holder means the person in whose name an exemption or approval has been issued.

Imminent Hazard means the existence of a condition which presents a substantial likelihood that death, serious illness, severe personal injury, or substantial endangerment to health, property, or the environment may occur before the reasonably foreseeable completion of an administrative hearing or other formal proceeding initiated to abate the risks of those effects.

Incident means an event resulting in the unintended and unanticipated release of a hazardous material or an event meeting incident reporting requirements in § 171.15 or § 171.16 of this chapter.

Indian Tribe shall have the meaning given that term under section 4 of the Indian Self-Determination and Education Act (25 U.S.C. 450b).

Investigation includes investigations authorized under 49 U.S.C. 5121 and inspections authorized under 49 U.S.C. 5118 and 5121.

Manufacturing exemption means an exemption from compliance with specified requirements that otherwise must be met before representing, marking, certifying (including requalifying, inspecting, and testing), selling or offering a packaging or container as meeting the requirements of subchapter C of this chapter governing its use in the transportation in commerce of a hazardous material. A manufacturing exemption is an exemption issued to a manufacturer of packagings who does not offer for transportation or transport hazardous materials in packagings subject to the exemption.

Party means a person, other than a holder, authorized to act under the terms of an exemption.

Person means an individual, firm, copartnership, corporation, company, association, joint-stock association, including any trustee, receiver, assignee, or similar representative thereof, or government, Indian tribe, or agency or instrumentality of any government or Indian tribe when it offers hazardous materials for transportation in commerce or transports hazardous materials in furtherance of a commercial enterprise, but such term does not include:

(1) The United States Postal Service, or

(2) For the purposes of 49 U.S.C. 5123 and 5124, any agency or instrumentality of the Federal Government.

Registration means a written acknowledgment from the Associate Administrator that a registrant is authorized to perform a function for which registration is required under subchapter C of this chapter (e.g., registration with RSPA as a cylinder retester pursuant to 49 CFR 173.34(e)(1), or registration in accordance with 49 CFR 178.503 regarding marking of packagings). For purposes of subparts A through E, ''registration'' does not include registration under subpart F or G of this part.

Report means information, other than an application, registration or part thereof, required to be submitted to the Associate Administrator pursuant to this subchapter, subchapter B or subchapter C of this chapter.

Respondent means a person upon whom the RSPA has served a notice of probable violation.

State means a State of the United States, the District of Columbia, the

Commonwealth of Puerto Rico, the Commonwealth of the Northern Mariana Islands, the Virgin Islands, American Samoa, Guam, or any other territory or possession of the United States designated by the Secretary; except that as used in 49 U.S.C. 5119, relating to uniformity of State registration and permitting forms and procedures, such term means a State of the United States and the District of Columbia.

Transports or *transportation* means any movement of property by any mode, and any loading, unloading, or storage incidental thereto.

[Amdt. 107–3, 41 FR 38170, Sept. 9, 1976, as amended by Amdt. 107–4, 43 FR 43307, Sept. 25, 1978; Amdt. 107–5, 43 FR 48642, Oct. 19, 1978; Amdt. 107–8, 46 FR 9888, Jan. 29, 1981; Amdt. 107–12, 48 FR 53711, Nov. 29, 1983; 50 FR 45730, Nov. 1, 1985; Amdt. 107–24, 56 FR 8621, Feb. 28, 1991; Amdt. 107–23, 56 FR 66157, Dec. 20, 1991; Amdt. 107–32, 59 FR 49130, Sept. 26, 1994; Amdt. 107–38, 61 FR 21094, May 9, 1996]

§107.5 Request for confidential treatment.

(a) If any person filing a document with the Associate Administrator claims that some or all the information contained in the document is exempt from the mandatory public disclosure requirements of the Freedom of Information Act (5 U.S.C. 552), is information referred to in 18 U.S.C. 1905, or is otherwise exempt by law from public disclosure, and if that person requests the Associate Administrator not to disclose the information, that person shall file, together with the document, a second copy of the document with the confidential information deleted. The person shall indicate each page of the original document that is confidential or contains confidential information by marking or stamping ''confidential'' on each page for which a claim of confidentiality is made, and may file a statement specifying the justification for the claim of confidentiality. If the person states that the information comes within the exception in 5 U.S.C. 552(b)(4) for trade secrets and commercial or financial information, that person shall include a statement as to why the information is privileged or confidential. If the person filing a document does not mark or stamp a document as confidential or submit a second copy of the document with the confidential information deleted, the Associate Administrator may assume that there is no objection to public disclosure of the document in its entirety.

(b) The Associate Administrator retains the right to make its own determination with regard to any claim of confidentiality. Notice of a decision by the Associate Administrator to deny the claim, in whole or in part, and an opportunity to respond shall be given to a person claiming confidentiality of information no less than five days prior to its public disclosure.

[40 FR 48470, Oct. 15, 1975, as amended by Amdt. 107–24, 56 FR 8621, Feb. 28, 1991; Amdt. 107–38, 61 FR 21095, May 9, 1996]

§107.7 Service of process on non-residents of the United States.

(a) *Designation of agent for service.* When a person who is not a resident of the United States is required by this subchapter or subchapter C of this chapter to designate a permanent resident of the United States as his agent upon whom service of process may be made for him and on his behalf, the agent may be an individual, a firm, or a domestic corporation. Any number of principals may designate the same person as agent. A designation is binding on a principal even if the designation is not in compliance with all the requirements of this section, until rejected by the Associate Administrator for Hazardous Materials Safety. A designated agent may not assign performance of his functions under the designation to another person.

(b) *Form and contents of designation.* The designation shall:

(1) Be in writing and dated;

(2) Be made in the legal form required to make it valid and binding on the principal under the laws, corporate bylaws, or other requirements governing the making of the designation by the principal at the place and time where it is made and the person or persons signing the designation shall certify that it is so made;

(3) State the full legal name, principal name of business and mailing address of the principal;

(4) Provide that it remains in effect until withdrawn or replaced by the principal;

(5) State the legal name and mailing address of the agent; and

(6) Bear a declaration of acceptance duly signed by the designated agent.

(c) *Method of service.* Service of any process, notice, order, decision, or requirement of the Associate Administrator for Hazardous Materials Safety may be made by registered or certified mail addressed to the agent with return receipt requested or in any other manner authorized by law. If service cannot be effected because the agent has died (or, if a firm or a corporation ceases to exist) or moved, or otherwise does not receive correctly addressed mail, service may be made by publication in the FEDERAL REGISTER.

[Amdt. 107–2, 41 FR 7509, Feb. 19, 1976, as amended by Amdt. 107–24, 56 FR 8621, Feb. 28, 1991]

§ 107.9 Public docket room.

There is established in the RSPA offices at 400 7th Street, SW., Washington, DC, a public docket room in which there is available for public inspection and copying:

(a) Copies of notices of proposed rulemaking issued by the RSPA or its predecessor agency, including advance notices, together with the comments received thereon during rulemaking proceedings, copies of any related FEDERAL REGISTER notices, final rules, petitions for reconsideration, and decisions issued in response to petitions for reconsideration;

(b) Applications for exemptions from the Department of Transportation's regulations governing the transportation of hazardous materials, including supporting data, memoranda of any informal meetings with applicants, related FEDERAL REGISTER notices, comments received thereon during the public comment period and copies of decisions issued granting or denying applications for exemptions;

(c) Applications for preemption and waiver of preemption determinations under subpart C of this part, together with the comments received thereon, related documents filed with the RSPA, copies of related FEDERAL REGISTER notices, and rulings, determinations and orders issued in response to those applications;

(d) Records of compliance order proceedings and copies of RSPA compliance orders;

(e) Appeals filed under this part and RSPA decisions issued in response to those appeals; and

(f) Such other information pertaining to the RSPA's hazardous materials program required by statute to be made available for public inspection and copying and any information which the RSPA determines should be made available to the public.

[Amdt. 107–3, 41 FR 38170, Sept. 9, 1976, as amended by Amdt. 107–8, 45 FR 81571, Dec. 11, 1980; Amdt. 107–24, 56 FR 8622, Feb. 28, 1991]

§ 107.11 Service.

(a) Each order, notice, or other document required to be served under this part shall be served personally or by registered or certified mail, except as otherwise provided.

(b) Service upon a person's duly authorized representative constitutes service upon that person.

(c) Service by registered or certified mail is complete upon mailing. An official United States Postal Service receipt from the registered or certified mailing constitutes prima facie evidence of service.

[Amdt. 107–3, 41 FR 38170, Sept. 9, 1976]

§ 107.13 Subpoenas, witness fees.

(a) The Administrator, RSPA, the Chief Counsel, Research and Special Programs Administration, or the Official designated to preside over a hearing convened in accordance with this part, may sign and issue subpoenas either on his own initiative or, upon an adequate showing that the information sought will materially advance the proceeding, upon the request of any person participating in that proceeding.

(b) A subpoena may require the attendance of a witness, or the production of documentary or other tangible evidence in the possession or under the control of the person served, or both.

(c) A subpoena may be served personally by any person who is not an interested person and is not less than 18 years of age, or by certified or registered mail.

(d) Service of a subpoena upon the person named therein shall be made by

delivering a copy of the subpoena to such person and by tendering the fees for one day's attendance and mileage as specified by paragraph (f) of this section. When a subpoena is issued at the instance of any officer or agency of the United States, fees and mileage need not be tendered at the time of service. Delivery of a copy of a subpoena and tender of the fees to a natural person may be made by handing them to the person, leaving them at his office with the person in charge thereof, leaving them at his dwelling place or usual place of abode with some person of suitable age and discretion then residing therein, by mailing them by registered or certified mail to him at his last known address, or by any method whereby actual notice is given to him and the fees are made available prior to the return date. When the person to be served is not a natural person, delivery of a copy of the subpoena and tender of the fees may be effected by handing them to a registered agent for service, or to any officer, director, or agent in charge of any office of the person, or by mailing them by registered or certified mail to that representative at his last known address or by any method whereby actual notice is given to the representative and the fees are made available prior to the return date.

(e) The original subpoena bearing a certificate of service shall be filed with the RSPA official having responsibility for the proceeding in connection with which the subpoena was issued.

(f) A witness subpoenaed by the RSPA shall be paid the same fees and mileage as would be paid to a witness in a proceeding in the district courts of the United States. The witness fees and mileage shall be paid by the person at whose instance the subpoena was issued.

(g) Notwithstanding the provisions of paragraph (f) of this section, and upon request, the witness fees and mileage may be paid by the RSPA if the RSPA official who issued the subpoena determines on the basis of good cause shown, that:

(1) The presence of the subpoenaed witness will materially advance the proceeding; and

(2) The person at whose instance the subpoena was issued would suffer a serious hardship if required to pay the witness fees and mileage.

(h) Any person to whom a subpoena is directed may apply no later than 10 days after service thereof, to the person who issued the subpoena to quash or modify it. The application shall contain a brief statement of the reasons relied upon in support of the action sought therein. The person who issued the subpoena may:

(1) Deny the application;

(2) Quash or modify the subpoena; or

(3) Condition denial of the application to quash or modify the subpoena upon the satisfaction of certain just and reasonable requirements. The denial may be summary.

(i) If there is a refusal to obey a subpoena served upon any person under the provisions of this section, the RSPA may request the Attorney General to seek the aid of the United States District Court for any District in which the person is found to compel that person, after notice, to appear and give testimony, or to appear and produce the subpoenaed documents before the RSPA, or both.

[Amdt. 107–3, 41 FR 38170, Sept. 9, 1976, as amended by Amdt. 107–11, 48 FR 2651, Jan. 20, 1983]

§107.14 Availability of informal guidance and interpretive assistance.

(a) *Availability of telephonic and Internet assistance.* (1) RSPA has a toll-free, telephonic information line which provides answers to inquiries by small entities and other parties concerning information on and advice about compliance with the hazardous materials regulations, 49 CFR parts 171–180. The information line is staffed from 9:00 a.m. through 4:00 p.m., Eastern time, Monday through Friday, except Federal holidays. When the information line is not staffed, callers leave a recorded message, which will be answered by the next business day. The telephone numbers for the information line are: 1–800–467–4922 (that is; 1–800–HMR49–22 toll free), or 202–366–4488 (Washington, DC area). Additionally, information may be obtained from the Office of Hazardous Materials Safety via the Internet at http://ohm.volpe.dot.gov/ohm.

(2) RSPA's Office of the Chief Counsel (OCC) is available to answer questions concerning Federal hazardous material transportation law, 49 USC 5101 *et seq.* and Federal preemption of state, local and Indian tribe hazardous material transportation requirements. OCC may be contacted by telephone (202–366–4400) from 9:00 a.m. to 4:00 p.m. Eastern time, Monday through Friday, except Federal holidays. Information and guidance concerning Federal hazardous material transportation law and preemption may also be obtained by contacting OCC via the Internet at http://rspa-atty.dot.gov.

(b) *Availability of Written Interpretations.* (1) A written regulatory clarification, response to a question, or an opinion concerning hazardous materials offering, transporting, or packaging requirements may be obtained by submitting a written request to the RSPA Office of Hazardous Materials Standards (DHM–10), U.S. Department of Transportation, 400 Seventh Street, SW., Washington, DC 20590–0001. The requestor must include his or her return address and should also include a daytime telephone number.

(2) A written interpretation regarding Federal hazardous material transportation law, 49 USC 5101 *et seq.*, may be obtained from the Office of the Chief Counsel (DCC–1) RSPA, U.S. Department of Transportation, 400 Seventh Street, SW., Washington, DC 20590–0001. The requestor must include his or her return address and should also include a daytime telephone number.

[62 FR 24057, May 2, 1997; 62 FR 34415, June 26, 1997]

Subpart B—Exemptions

SOURCE: Amdt. 107–38, 61 FR 21095, May 9, 1996, unless otherwise noted.

§ 107.101 Purpose and scope.

This subpart prescribes procedures for the issuance, modification and termination of exemptions from requirements of this subchapter, subchapter C of this chapter, or regulations issued under chapter 51 of 49 U.S.C.

§ 107.105 Application for exemption.

(a) *General.* Each application for an exemption or modification of an exemption must be written in English and must—

(1) Be submitted in duplicate and, for timely consideration, at least 120 days before the requested effective date to: Associate Administrator for Hazardous Materials Safety, Research and Special Programs Administration, U.S. Department of Transportation, 400 7th Street, SW, Washington, DC 20590–0001. Attention: Exemptions, DHM–31;

(2) State the name, street and mailing addresses, and telephone number of the applicant; if the applicant is not an individual, state the name, street and mailing addresses, and telephone number of an individual designated as an agent of the applicant for all purposes related to the application;

(3) If the applicant is not a resident of the United States, a designation of agent for service in accordance with § 107.7 of this part; and

(4) For a manufacturing exemption, a statement of the name and street address of each facility where manufacturing under the exemption will occur.

(b) *Confidential treatment.* To request confidential treatment for information contained in the application, the applicant shall comply with § 107.5(a).

(c) *Description of exemption proposal.* The application must include the following information that is relevant to the exemption proposal:

(1) A citation of the specific regulation from which the applicant seeks relief;

(2) Specification of the proposed mode or modes of transportation;

(3) A detailed description of the proposed exemption (e.g., alternative packaging, test, procedure or activity) including, as appropriate, written descriptions, drawings, flow charts, plans and other supporting documents;

(4) A specification of the proposed duration or schedule of events for which the exemption is sought;

(5) A statement outlining the applicant's basis for seeking relief from compliance with the specified regulations and, if the exemption is requested for a fixed period, a description of how compliance will be achieved at the end of that period;

(6) If the applicant seeks emergency processing specified in § 107.117, a statement of supporting facts and reasons;

(7) Identification and description of the hazardous materials planned for transportation under the exemption;

(8) Description of each packaging, including specification or exemption number, as applicable, to be used in conjunction with the requested exemption;

(9) For alternative packagings, documentation of quality assurance controls, package design, manufacture, performance test criteria, in-service performance and service-life limitations;

(d) *Justification of exemption proposal.* The application must demonstrate that an exemption achieves a level of safety at least equal to that required by regulation, or if a required safety level does not exist, is consistent with the public interest. At a minimum, the application must provide the following:

(1) Information describing all relevant shipping and incident experience of which the applicant is aware that relates to the application;

(2) A statement identifying any increased risk to safety or property that may result if the exemption is granted, and a description of the measures to be taken to address that risk; and

(3) Either—

(i) Substantiation, with applicable analyses, data or test results, that the proposed alternative will achieve a level of safety that is at least equal to that required by the regulation from which the exemption is sought; or

(ii) If the regulations do not establish a level of safety, an analysis that identifies each hazard, potential failure mode and the probability of its occurrence, and how the risks associated with each hazard and failure mode are controlled for the duration of an activity or life-cycle of a packaging.

[Amdt. 107–38, 61 FR 21095, May 9, 1996, as amended at 62 FR 51556, Oct. 1, 1997]

§ 107.107 Application for party status.

(a) Any person eligible to apply for an exemption may apply to be made party to an application or an existing exemption, other than a manufacturing exemption.

(b) Each application filed under this section must—

(1) Be submitted in duplicate to: Associate Administrator for Hazardous Materials Safety, Research and Special Programs Administration, U.S. Department of Transportation, 400 7th Street, SW, Washington, DC 20590–0001. Attention: Exemptions, DHM–31;

(2) Identify by number the exemption application or exemption to which the applicant seeks to become a party;

(3) State the name, street and mailing addresses, and telephone number of the applicant; if the applicant is not an individual, state the name, street and mailing addresses, and telephone number of an individual designated as the applicant's agent for all purposes related to the application; and

(4) If the applicant is not a resident of the United States, provide a designation of agent for service in accordance with § 107.7.

(c) The Associate Administrator grants or denies an application for party status in the manner specified in § 107.113(e) and (f) of this subpart.

(d) A party to an exemption is subject to all terms of that exemption, including the expiration date. If a party to an exemption wishes to renew party status, the exemption renewal procedures set forth in § 107.109 apply.

§ 107.109 Application for renewal.

(a) Each application for renewal of an exemption or party status to an exemption must—

(1) Be submitted in duplicate to: Associate Administrator for Hazardous Materials Safety, Research and Special Programs Administration, U.S. Department of Transportation, 400 7th Street, SW, Washington, DC 20590–0001. Attention: Exemptions, DHM–31;

(2) Identify by number the exemption for which renewal is requested;

(3) State the name, street and mailing addresses, and telephone number of the applicant; if the applicant is not an individual, state the name, street and mailing addresses, and telephone number of an individual designated as an agent of the applicant for all purposes related to the application;

(4) Include either a certification by the applicant that the original application, as it may have been updated by

any application for renewal, remains accurate and complete; or include an amendment to the previously submitted application as is necessary to update and assure the accuracy and completeness of the application, with certification by the applicant that the application as amended is accurate and complete; and

(5) Include a statement describing all relevant shipping and incident experience of which the applicant is aware in connection with the exemption since its issuance or most recent renewal. If the applicant is aware of no incidents, the applicant shall so certify. When known to the applicant, the statement should indicate the approximate number of shipments made or packages shipped, as the case may be, and number of shipments or packages involved in any loss of contents, including loss by venting other than as authorized in subchapter C.

(b) If at least 60 days before an existing exemption expires the holder files an application for renewal that is complete and conforms to the requirements of this section, the exemption will not expire until final administrative action on the application for renewal has been taken.

§ 107.111 Withdrawal.

An application may be withdrawn at any time before a decision to grant or deny it is made. Withdrawal of an application does not authorize the removal of any related records from the RSPA dockets or files. Applications that are eligible for confidential treatment under § 107.5 will remain confidential after the application is withdrawn. The duration of this confidential treatment for trade secrets and commercial or financial information is indefinite, unless the party requesting the confidential treatment of the materials notifies the Associate Administrator that the confidential treatment is no longer required.

§ 107.113 Application processing and evaluation.

(a) The Associate Administrator reviews an application for exemption, modification of exemption, party to exemption, or renewal of an exemption to determine if it is complete and conforms with the requirements of this subpart. This determination will be made within 30 days of receipt of the application for exemption, modification of exemption, or party to exemption, and within 15 days of receipt of an application for renewal of an exemption. If an application is determined to be incomplete, the applicant is informed of the reasons.

(b) An application, other than a renewal, party to, or emergency exemption application, that is determined to be complete is docketed. Notice of the application is published in the FEDERAL REGISTER, and an opportunity for public comment is provided. All comments received during the comment period are considered before final action is taken on the application.

(c) No public hearing or other formal proceeding is required under this subpart before the disposition of an application. Unless emergency processing under § 107.117 is requested and granted, applications are usually processed in the order in which they are filed.

(d) During the processing and evaluation of an application, the Associate Administrator may request additional information from the applicant. If the applicant does not respond to a written request for additional information within 30 days of the date the request was received, the application may be deemed incomplete and denied. However, if the applicant responds in writing within the 30-day period requesting an additional 30 days within which it will gather the requested information, the Associate Administrator may grant the 30-day extension.

(e) The Associate Administrator may grant or deny an application, in whole or in part. In the Associate Administrator's discretion, an application may be granted subject to provisions that are appropriate to protect health, safety or property. The Associate Administrator may impose additional provisions not specified in the application or remove conditions in the application that are unnecessary.

(f) The Associate Administrator may grant an application on finding that—

(1) The application complies with this subpart;

(2) The application demonstrates that the proposed alternative will achieve a level of safety that:

(i) Is at least equal to that required by the regulation from which the exemption is sought, or

(ii) If the regulations do not establish a level of safety, is consistent with the public interest and adequately will protect against the risks to life and property inherent in the transportation of hazardous materials in commerce;

(3) The application states all material facts, and contains no materially false or materially misleading statement;

(4) The applicant meets the qualifications required by applicable regulations; and

(5) The applicant is fit to conduct the activity authorized by the exemption. This assessment may be based on information in the application, prior compliance history of the applicant, and other information available to the Associate Administrator.

(g) An applicant is notified in writing whether the application is granted or denied. A denial contains a brief statement of reasons.

(h) An exemption and any renewal thereof terminates according to its terms or, if not otherwise specified, two years after the date of issuance. A grant of party status to an exemption, unless otherwise stated, terminates on the date that the exemption expires.

(i) The Associate Administrator, on determining that an application concerns a matter of general applicability and future effect and should be the subject of rulemaking, may initiate rulemaking under part 106 of this chapter in addition to or instead of acting on the application.

(j) The Associate Administrator publishes in the FEDERAL REGISTER a list of all exemption grants, denials, and modifications and all exemption applications withdrawn under this section.

§ 107.117 Emergency processing.

(a) An application is granted emergency processing if the Associate Administrator, on the basis of the application and any inquiry undertaken, finds that—

(1) Emergency processing is necessary to prevent significant injury to persons or property (other than the hazardous material to be transported) that could not be prevented if the application were processed on a routine basis; or

(2) Emergency processing is necessary for immediate national security purposes or to prevent significant economic loss that could not be prevented if the application were processed on a routine basis.

(b) Where the significant economic loss is to the applicant, or to a party in a contractual relationship to the applicant with respect to the activity to be undertaken, the Associate Administrator may deny emergency processing if timely application could have been made.

(c) A request for emergency processing on the basis of potential economic loss must reasonably describe and estimate the potential loss.

(d) An application submitted under this section must conform to § 107.105 to the extent that the receiving U.S. Department of Transportation official deems necessary to process the application. An application on an emergency basis must be submitted to the U.S. Department of Transportation modal contact official for the initial mode of transportation to be utilized, as follows:

(1) *Certificate-Holding Aircraft:* The Federal Aviation Administration Civil Aviation Security Office that serves the place where the flight will originate or that is responsible for the aircraft operator's overall aviation security program. The nearest Civil Aviation Security Office may be located by calling the FAA Duty Officer, 202–267–3333 (any hour).

(2) *Noncertificate-Holding Aircraft (Those Which Operate Under 14 CFR Part 91):* The Federal Aviation Administration Civil Aviation Security Office that serves the place where the flight will originate. The nearest Civil Aviation Security Office may be located by calling the FAA Duty Officer, 202–267–3333 (any hour).

(3) *Motor Vehicle Transportation:* Director, Office of Motor Carrier Research and Standards, Federal Highway Administration, U.S. Department of Transportation, Washington, DC 20590–

0001, 202–366–4001 (day); 202–267–2100 (night).

(4) *Rail Transportation:* Staff Director, Hazardous Materials Division, Office of Safety Assurance and Compliance, Federal Railroad Administration, U.S. Department of Transportation, Washington, DC 20590–0001, 202–366–0509 or 366–0523 (day); 202–267–2100 (night).

(5) *Water Transportation:* Chief, Hazardous Materials Standards Division, Office of Operating and Environmental Standards, United States Coast Guard, U.S. Department of Transportation, Washington, DC 20593–0001, 202–267–1577 (day); 202–267–2100 (night).

(e) On receipt of all information necessary to process the application, the receiving Department of Transportation official transmits to the Associate Administrator, by the most rapid available means of communication, an evaluation as to whether an emergency exists under § 107.117(a) and, if appropriate, recommendations as to the conditions to be included in the exemption. If the Associate Administrator determines that an emergency exists under § 107.117(a) and that, with reference to the criteria of § 107.113(f), granting of the application is in the public interest, the Associate Administrator grants the application subject to such terms as necessary and immediately notifies the applicant. If the Associate Administrator determines that an emergency does not exist or that granting of the application is not in the public interest, the applicant immediately is so notified.

(f) A determination that an emergency does not exist is not subject to reconsideration under § 107.123 of this part.

(g) Within 90 days following issuance of an emergency exemption, the Associate Administrator will publish, in the FEDERAL REGISTER, a notice of issuance with a statement of the basis for the finding of emergency and the scope and duration of the exemption.

[Amdt. 107–38, 61 FR 21095, May 9, 1996, as amended at 62 FR 51556, Oct. 1, 1997]

§ 107.121 Modification, suspension or termination of exemption or grant of party status.

(a) The Associate Administrator may modify an exemption or grant of party status on finding that—

(1) Modification is necessary so that an exemption reflects current statutes and regulations; or

(2) Modification is required by changed circumstances to meet the standards of § 107.113(f).

(b) The Associate Administrator may modify, suspend or terminate an exemption or grant of party status, as appropriate, on finding that—

(1) Because of a change in circumstances, the exemption or party status no longer is needed or no longer would be granted if applied for;

(2) The application contained inaccurate or incomplete information, and the exemption or party status would not have been granted had the application been accurate and complete;

(3) The application contained deliberately inaccurate or incomplete information; or

(4) The holder or party knowingly has violated the terms of the exemption or an applicable requirement of this chapter, in a manner demonstrating the holder or party is not fit to conduct the activity authorized by the exemption.

(c) Except as provided in paragraph (d) of this section, before an exemption or grant of party status is modified, suspended or terminated, the Associate Administrator notifies the holder or party in writing of the proposed action and the reasons for it, and provides an opportunity to show cause why the proposed action should not be taken.

(1) The holder or party may file a written response that shows cause why the proposed action should not be taken within 30 days of receipt of notice of the proposed action.

(2) After considering the holder's or party's written response, or after 30 days have passed without response since receipt of the notice, the Associate Administrator notifies the holder or party in writing of the final decision with a brief statement of reasons.

(d) The Associate Administrator, if necessary to avoid a risk of significant harm to persons or property, may in the notification declare the proposed action immediately effective.

§107.123 Reconsideration.

(a) An applicant for exemption, an exemption holder, or an applicant for party status to an exemption may request that the Associate Administrator reconsider a decision under §107.113(g), §107.117(e) or §107.121(c) of this part. The request must—

(1) Be in writing and filed within 20 days of receipt of the decision;

(2) State in detail any alleged errors of fact and law;

(3) Enclose any additional information needed to support the request to reconsider; and

(4) State in detail the modification of the final decision sought.

(b) The Associate Administrator grants or denies, in whole or in part, the relief requested and informs the requesting person in writing of the decision. If necessary to avoid a risk of significant harm to persons or property, the Associate Administrator may, in the notification, declare the action immediately effective.

§107.125 Appeal.

(a) A person who requested reconsideration under §107.123 and is denied the relief requested may appeal to the Administrator. The appeal must—

(1) Be in writing and filed within 30 days of receipt of the Associate Administrator's decision on reconsideration;

(2) State in detail any alleged errors of fact and law;

(3) Enclose any additional information needed to support the appeal; and

(4) State in detail the modification of the final decision sought.

(b) The Administrator, if necessary to avoid a risk of significant harm to persons or property, may declare the Associate Administrator's action effective pending a decision on appeal.

(c) The Administrator grants or denies, in whole or in part, the relief requested and informs the appellant in writing of the decision. The Administrator's decision is the final administrative action.

§107.127 Availability of documents for public inspection.

(a) Documents related to an application under this subpart, including the application itself, are available for public inspection, except as specified in paragraph (b) of this section, at the Office of the Associate Administrator for Hazardous Materials Safety, Research and Special Programs Administration, Dockets Unit, U.S. Department of Transportation, 400 7th Street, SW, Washington, DC 20590–0001, Room 8421. Office hours are 8:30 a.m. to 5:00 p.m., Monday through Friday, except holidays when the office is closed. Copies of available documents may be obtained as provided in part 7 of this title.

(b) Documents available for inspection do not include materials determined to be withheld from public disclosure under §107.5 and in accordance with the applicable provisions of section 552(b) of title 5, United States Code, and part 7 of this title.

Subpart C—Preemption

§107.201 Purpose and scope.

(a) This subpart prescribes procedures by which:

(1) Any person, including a State, political subdivision, or Indian tribe, directly affected by any requirement of a State, political subdivision, or Indian tribe, may apply for a determination as to whether that requirement is preempted under 49 U.S.C. 5125, or regulations issued thereunder; and

(2) A State, political subdivision, or Indian tribe may apply for a waiver of preemption with respect to any requirement that the State, political subdivision, or Indian tribe acknowledges to be preempted by 49 U.S.C. 5125, or regulations issued thereunder, or that has been determined by a court of competent jurisdiction to be so preempted.

(b) For purposes of this subpart ''political subdivision'' includes a municipality; a public agency or other instrumentality of one or more States, municipalities, or other political subdivisions of a State; or a public corporation, board, or commission established under the laws of one or more States.

(c) For purposes of this subpart, ''regulations issued under the Federal hazardous material transportation law'' means the regulations contained in this subchapter and subchapter C of this chapter.

(d) Unless otherwise ordered by the Associate Administrator, an application for a preemption determination which includes an application for a waiver of preemption will be treated and processed solely as an application for a preemption determination.

[Amdt. 107–3, 41 FR 38171, Sept. 9, 1976, as amended by Amdt. 107–24, 56 FR 8622, Feb. 28, 1991; Amdt. 107–25, 57 FR 20428, May 13, 1992; Amdt. 107–32, 59 FR 49130, Sept. 26, 1994; Amdt. 107–35, 60 FR 49108, Sept. 21, 1995; Amdt. 107–38, 61 FR 21098, May 9, 1996]

§ 107.202 Standards for determining preemption.

(a) Except as provided in § 107.221 and unless otherwise authorized by Federal law, any requirement of a State or political subdivision thereof or an Indian tribe, that concerns one of the following subjects and that is not substantively the same as any provision of the Federal hazardous material transportation law, this subchapter or subchapter C that concerns that subject, is preempted:

(1) The designation, description, and classification of hazardous material.

(2) The packing, repacking, handling, labeling, marking, and placarding of hazardous material.

(3) The preparation, execution, and use of shipping documents pertaining to hazardous material and requirements related to the number, content, and placement of those documents.

(4) The written notification, recording, and reporting of the unintentional release in transportation of hazardous material.

(5) The design, manufacturing, fabrication, marking, maintenance, reconditioning, repairing, or testing of a packaging or a container which is represented, marked, certified, or sold as qualified for use in the transportation of hazardous material.

(b) Except as provided in § 107.221 and unless otherwise authorized by Federal law, any requirement of a State or political subdivision or Indian tribe is preempted if—

(1) Complying with a requirement of the State, political subdivision, or Indian tribe and a requirement under the Federal hazardous material transportation law or regulations issued thereunder is not possible;

(2) The requirement of the State, political subdivision, or Indian tribe, as applied or enforced, is an obstacle to accomplishing and carrying out the Federal hazardous material transportation law or regulations issued thereunder; or

(3) It is preempted under 49 U.S.C. 5125 (c).

(c) A State, political subdivision, or Indian tribe may impose a fee related to transporting hazardous material only if the fee is fair and used for a purpose related to transporting hazardous material, including enforcement and planning, developing and maintaining a capability for emergency response.

(d) For purposes of this section, ''substantively the same'' means that the non-Federal requirement conforms in every significant respect to the Federal requirement. Editorial and other similar *de minimis* changes are permitted.

[Amdt. 107–24, 56 FR 8622, Feb. 28, 1991, as amended by Amdt. 107–25, 57 FR 20428, May 13, 1992; Amdt. 107–29, 58 FR 51527, Oct. 1, 1993; Amdt. 107–32, 59 FR 49130, Sept. 26, 1994; Amdt. 107–38, 61 FR 21098, May 9, 1996; Amdt. 107–39, 61 FR 51337, Oct. 1, 1996]

PREEMPTION DETERMINATIONS

§ 107.203 Application.

(a) With the exception of highway routing matters covered under 49 U.S.C. 5125(c), any person, including a State or political subdivision thereof or an Indian tribe, directly affected by any requirement of a State or political subdivision thereof or an Indian tribe, may apply to the Associate Administrator for a determination of whether that requirement is preempted by § 107.202 (a) or (b).

(b) Each application filed under this section for a determination must:

(1) Be submitted to Associate Administrator for Hazardous Materials Safety, Research and Special Programs Administration, U.S. Department of Transportation, Washington, DC 20590–

0001. Attention: Hazardous Materials Preemption Docket;

(2) Set forth the text of the State or political subdivision or Indian tribe requirement for which the determination is sought;

(3) Specify each requirement of the Federal hazardous material transportation law or the regulations issued thereunder with which the applicant seeks the State or political subdivision or Indian tribe requirement to be compared;

(4) Explain why the applicant believes the State or political subdivision or Indian tribe requirement should or should not be preempted under the standards of § 107.202; and

(5) State how the applicant is affected by the State or political subdivision or Indian tribe requirement.

(c) The filing of an application for a determination under this section does not constitute grounds for noncompliance with any requirement of the Federal hazardous material transportation law or the regulations issued thereunder.

(d) Once the Associate Administrator has published notice in the FEDERAL REGISTER of an application received under paragraph (a) of this section, no applicant for such determination may seek relief with respect to the same or substantially the same issue in any court until final action has been taken on the application or until 180 days after filing of the application, whichever occurs first. Nothing in § 107.203(a) prohibits a State or political subdivision or Indian tribe, or any other person directly affected by any requirement of a State or political subdivision thereof or Indian tribe, from seeking a determination of preemption in any court of competent jurisdiction in lieu of applying to the Associate Administrator under paragraph (a) of this section.

[Amdt. 107–24, 56 FR 8622, Feb. 28, 1991, as amended by Amdt. 107–25, 57 FR 20428, May 13, 1992; Amdt. 107–32, 59 FR 49131, Sept. 26, 1994; Amdt. 107–38, 61 FR 21098, May 9, 1996]

§ 107.205 Notice.

(a) If the applicant is other than a State, political subdivision, or Indian tribe, the applicant shall mail a copy of the application to the State, political subdivision, or Indian tribe concerned accompanied by a statement that the State, political subdivision, or Indian tribe may submit comments regarding the application to the Associate Administrator. The application filed with the Associate Administrator must include a certification that the applicant has complied with this paragraph and must include the names and addresses of each State, political subdivision, or Indian tribe official to whom a copy of the application was sent.

(b) The Associate Administrator will publish notice of, including an opportunity to comment on, an application in the FEDERAL REGISTER and may notify in writing any person readily identifiable as affected by the outcome of the determination.

(c) Each person submitting written comments to the Associate Administrator with respect to an application filed under this section shall send a copy of the comments to the applicant and certify to the Associate Administrator that he or she has complied with this requirement. The Associate Administrator may notify other persons participating in the proceeding of the comments and provide an opportunity for those other persons to respond. Late-filed comments are considered so far as practicable.

[Amdt. 107–38, 61 FR 21098, May 9, 1996]

§ 107.207 Processing.

(a) The Associate Administrator may initiate an investigation of any statement in an application and utilize in his or her evaluation any relevant facts obtained by that investigation. The Associate Administrator may solicit and accept submissions from third persons relevant to an application and will provide the applicant an opportunity to respond to all third person submissions. In evaluating an application, the Associate Administrator may consider any other source of information. The Associate Administrator on his or her own initiative may convene a hearing or conference, if he or she considers that a hearing or conference will advance his or her evaluation of the application.

(b) The Associate Administrator may dismiss the application without prejudice if:

(1) He or she determines that there is insufficient information upon which to base a determination; or

(2) He or she requests additional information from the applicant and it is not submitted.

[Amdt. 107–3, 41 FR 38171, Sept. 9, 1976, as amended by Amdt. 107–24, 56 FR 8621, 8622, Feb. 28, 1991; Amdt. 107–38, 61 FR 21098, May 9, 1996]

§ 107.209 Determination.

(a) Upon consideration of the application and other relevant information received, the Associate Administrator issues a determination.

(b) The determination includes a written statement setting forth the relevant facts and the legal basis for the determination, and provides that any person aggrieved thereby may file a petition for reconsideration with the Associate Administrator.

(c) The Associate Administrator provides a copy of the determination to the applicant and to any other person who substantially participated in the proceeding or requested in comments to the docket to be notified of the determination. A copy of each determination is placed on file in the public docket. The Associate Administrator will publish the determination or notice of the determination in the FEDERAL REGISTER.

(d) A determination issued under this section constitutes an administrative determination as to whether a particular requirement of a State or political subdivision or Indian tribe is preempted under the Federal hazardous material transportation law or regulations issued thereunder. The fact that a determination has not been issued under this section with respect to a particular requirement of a State or political subdivision or Indian tribe carries no implication as to whether the requirement is preempted under the Federal hazardous material transportation law or regulations issued hereunder.

[Amdt. 107–24, 56 FR 8623, Feb. 28, 1991, as amended by Amdt. 107–25, 57 FR 20428, May 13, 1992; Amdt. 107–32, 59 FR 49131, Sept. 26, 1994; Amdt. 107–38, 61 FR 21098, May 9, 1996]

§ 107.211 Petition for reconsideration.

(a) Any person aggrieved by a determination issued under § 107.209 may file a petition for reconsideration with the Associate Administrator. The petition must be filed within 20 days of publication of the determination in the FEDERAL REGISTER.

(b) The petition must contain a concise statement of the basis for seeking review, including any specific factual or legal error alleged. If the petition requests consideration of information that was not previously made available to the Associate Administrator, the petition must include the reasons why such information was not previously made available.

(c) The petitioner shall mail a copy of the petition to each person who participated, either as an applicant or commenter, in the preemption determination proceeding, accompanied by a statement that the person may submit comments concerning the petition to the Associate Administrator within 20 days. The petition filed with the Associate Administrator must contain a certification that the petitioner has complied with this paragraph and include the names and addresses of all persons to whom a copy of the petition was sent. Late-filed comments are considered so far as practicable.

(d) The Associate Administrator's decision constitutes final agency action.

[Amdt. 107–25, 57 FR 20428, May 13, 1992, as amended by Amdt. 107–38, 61 FR 21099, May 9, 1996]

§ 107.213 Judicial review.

A party to a proceeding under § 107.203(a) may seek review by the appropriate district court of the United States of a decision of the Associate Administrator by filing a petition with the court within 60 days after the Associate Administrator's determination becomes final. The determination becomes final when it is published in the FEDERAL REGISTER.

[Amdt. 107–38, 61 FR 21099, May 9, 1996]

WAIVER OF PREEMPTION DETERMINATIONS

§ 107.215 Application.

(a) With the exception of requirements preempted under 49 U.S.C. 5125(c), any State or political subdivision thereof, or Indian tribe may apply to the Associate Administrator for a waiver of preemption with respect to any requirement that the State or political subdivision thereof or an Indian tribe acknowledges to be preempted under the Federal hazardous material transportation law or the regulations issued thereunder, or that has been determined by a court of competent jurisdiction to be so preempted. The Associate Administrator may waive preemption with respect to such requirement upon a determination that such requirement—

(1) Affords an equal or greater level of protection to the public than is afforded by the requirements of the Federal hazardous material transportation law or the regulations issued thereunder, and

(2) Does not unreasonably burden commerce.

(b) Each application filed under this section for a waiver of preemption determination must:

(1) Be submitted to the Associate Administrator for Hazardous Materials Safety, Research and Special Programs Administration, U.S. Department of Transportation, Washington, DC 20590–0001. Attention: Hazardous Materials Preemption Docket;

(2) Set forth the text of the State or political subdivision requirement for which the determination is being sought;

(3) Include a copy of any court order and any ruling issued under § 107.209 having a bearing on the application;

(4) Contain an express acknowledgment by the applicant that the State, political subdivision, or Indian tribe requirement is preempted under the Federal hazardous material transportation law or the regulations issued thereunder, unless it has been so determined by a court of competent jurisdiction or in a determination issued under § 107.209;

(5) Specify each requirement of the Federal hazardous material transportation law or the regulations issued thereunder that preempts the State, political subdivision, or Indian tribe requirement;

(6) State why the applicant believes the State, political subdivision or Indian tribe requirements affords an equal or greater level of protection to the public than is afforded by the requirements of the Federal hazardous material transportation law or the regulations issued thereunder;

(7) State why the applicant believes the State, political subdivision or Indian tribe requirement does not unreasonably burden commerce; and

(8) Specify what steps the State, political subdivision or Indian tribe is taking to administer and enforce effectively its inconsistent requirement.

[Amdt. 107–3, 41 FR 38171, Sept. 9, 1976, as amended by Amdt. 107–22, 55 FR 39978, Oct. 1, 1990; Amdt. 107–24, 56 FR 8621, 8623, Feb. 28, 1991; 56 FR 15510, Apr. 17, 1991; Amdt. 107–23, 56 FR 66156, Dec. 20, 1991; Amdt. 107–25, 57 FR 20428, May 13, 1992; Amdt. 107–32, 59 FR 49131, Sept. 26, 1994; Amdt. 107–38, 61 FR 21099, May 9, 1996]

§ 107.217 Notice.

(a) The applicant shall mail a copy of the application and any subsequent amendments or other documents relating to the application to each person who is reasonably ascertainable by the applicant as a person who will be affected by the determination sought. The copy of the application must be accompanied by a statement that the person may submit comments regarding the application to the Associate Administrator within 45 days. The application filed with the Associate Administrator must include a certification that the application has complied with this paragraph and must include the names and addresses of each person to whom the application was sent.

(b) Notwithstanding the provisions of paragraph (a) of this section, if the State or political subdivision determines that compliance with paragraph (a) of this section would be impracticable, the applicant shall:

(1) Comply with the requirements of paragraph (a) of this section with regard to those persons whom it is reasonable and practicable to notify; and

(2) Include with the application filed with the Associate Administrator a description of the persons or class or classes of persons to whom notice was not sent.

(c) The Associate Administrator may require the applicant to provide notice in addition to that required by paragraphs (a) and (b) of this section, or may determine that the notice required by paragraph (a) of the section is not impracticable, or that notice should be published in the FEDERAL REGISTER. Late-filed comments are considered so far as practicable.

(d) The Associate Administrator may notify any other persons who may be affected by the outcome of a determination on the application.

(e) Any person submitting written comments to the Associate Administrator with respect to an application filed under this section shall send a copy of the comments to the applicant. The person shall certify to the Associate Administrator that he has complied with the requirements of this paragraph. The Associate Administrator may notify other persons participating in the proceeding of the comments and provide an opportunity for those other persons to respond.

[Amdt. 107–3, 41 FR 38171, Sept. 9, 1976, as amended by Amdt. 107–24, 56 FR 8621, Feb. 28, 1991; Amdt. 107–25, 57 FR 20429, May 13, 1992; Amdt. 107–38, 61 FR 21099, May 9, 1996]

§ 107.219 Processing.

(a) The Associate Administrator may initiate an investigation of any statement in an application and utilize in his or her evaluation any relevant facts obtained by that investigation. The Associate Administrator may solicit and accept submissions from third persons relevant to an application and will provide the applicant an opportunity to respond to all third person submissions. In evaluating an application, the Associate Administrator on his or her own initiative may convene a hearing or conference, if he or she considers that a hearing or conference will advance his or her evaluation of the application.

(b) The Associate Administrator may dismiss the application without prejudice if:

(1) He or she determines that there is insufficient information upon which to base a determination;

(2) Upon his or her request, additional information is not submitted by the applicant; or

(3) The applicant fails to provide the notice required by § 107.217.

(c) Except as provided in § 107.201(c), the Associate Administrator will only consider an application for a waiver of preemption determination if:

(1) The applicant State or political subdivision thereof or Indian tribe expressly acknowledges in its application that the State or political subdivision thereof of Indian tribe requirement for which the determination is sought is inconsistent with the requirements of the Federal hazardous material transportation law or the regulations issued thereunder; or

(2) The State or political subdivision thereof or Indian tribe requirement has been determined by a court of competent jurisdiction or in a ruling issued under § 107.209 to be inconsistent with the requirements of the Federal hazardous material transportation law or the regulations issued thereunder.

(d) When the Associate Administrator has received all substantive information it considers necessary to process an application for a waiver of preemption determination, it serves notice of that fact upon the applicant and all other persons who received notice of the proceeding pursuant to § 107.217.

(e) To the extent possible, each application for a waiver of preemption determination will be acted upon in a manner consistent with the disposition of previous applications for waiver of preemption determinations.

[Amdt. 107–3, 41 FR 38171, Sept. 9, 1976, as amended by Amdt. 107–24, 56 FR 8621, 8623, Feb. 28, 1991; Amdt. 107–32, 59 FR 49131, Sept. 26, 1994; Amdt. 107–38, 61 FR 21099, May 9, 1996]

§ 107.221 Determination.

(a) After considering the application and other relevant information received or obtained during the proceeding, the Associate Administrator issues a determination.

(b) The Associate Administrator may issue a waiver of preemption only on

finding that the requirement of the State or political subdivision thereof or Indian tribe affords the public a level of safety at least equal to that afforded by the requirements of the Federal hazardous material transportation law or the regulations issued thereunder and does not unreasonably burden commerce. In determining if the requirement of the State or political subdivision thereof or Indian tribe unreasonably burdens commerce, the Associate Administrator considers:

(1) The extent to which increased costs and impairment of efficiency result from the requirement of the State or political subdivision thereof or Indian tribe.

(2) Whether the requirement of the State or political subdivision thereof or Indian tribe has a rational basis.

(3) Whether the requirement of the State or political subdivision thereof or Indian tribe achieves its stated purpose.

(4) Whether there is need for uniformity with regard to the subject concerned and if so, whether the requirement of the State or political subdivision thereof or Indian tribe competes or conflicts with those of other States or political subdivisions thereof or Indian tribes.

(c) The determination includes a written statement setting forth relevant facts and legal bases and providing that any person aggrieved by the determination may file a petition for reconsideration with the Associate Administrator.

(d) The Associate Administrator provides a copy of the determination to the applicant and to any other person who substantially participated in the proceeding or requested in comments to the docket to be notified of the determination. A copy of the determination is placed on file in the public docket. The Associate Administrator will publish the determination or notice of the determination in the FEDERAL REGISTER.

(e) A determination under this section constitutes an administrative finding of whether a particular requirement of a State or political subdivision thereof or Indian tribe is preempted under the Federal hazardous material transportation law or any regulation issued thereunder, or whether preemption is waived.

[Amdt. 107–38, 61 FR 21099, May 9, 1996]

§ 107.223 Petition for reconsideration.

(a) Any person aggrieved by a determination under § 107.221 may file a petition for reconsideration with the Associate Administrator. The petition must be filed within 20 days of publication of the determination in the FEDERAL REGISTER.

(b) The petition must contain a concise statement of the basis for seeking review, including any specific factual or legal error alleged. If the petition requests consideration of information that was not previously made available to the Associate Administrator, the petition must include the reasons why such information was not previously made available.

(c) The petitioner shall mail a copy of the petition to each person who participated, either as an applicant or commenter, in the waiver of preemption proceeding, accompanied by a statement that the person may submit comments concerning the petition to the Associate Administrator within 20 days. The petition filed with the Associate Administrator must contain a certification that the petitioner has complied with this paragraph and include the names and addresses of all persons to whom a copy of the petition was sent. Late-filed comments are considered so far as practicable.

(d) The Associate Administrator's decision constitutes final agency action.

[Amdt. 107–25, 57 FR 20429, May 13, 1992, as amended by Amdt. 107–38, 61 FR 21099, May 9, 1996]

§ 107.227 Judicial review.

A party to a proceeding under § 107.215(a) may seek review by the appropriate district court of the United States of a decision of the Associate Administrator by filing a petition with the court within 60 days after the Associate Administrator's determination becomes final. The determination becomes final when it is published in the FEDERAL REGISTER.

[Amdt. 107–38, 61 FR 21099, May 9, 1996]

Subpart D—Enforcement

SOURCE: Amdt. 107–11, 48 FR 2651, Jan. 20, 1983, unless otherwise noted.

§ 107.301 Delegated authority for enforcement.

Under redelegation from the Administrator, Research and Special Programs Administration, the Associate Administrator for Hazardous Materials Safety and the Office of the Chief Counsel exercise their authority for enforcement of the Federal hazardous material transportation law, this subchapter, and subchapter C of this subchapter, in accordance with § 1.53 of this title.

[Amdt. 107–11, 48 FR 2651, Jan. 20, 1983, as amended by Amdt. 107–24, 56 FR 8621, Feb. 28, 1991; Amdt. 107–32, 59 FR 49131, Sept. 26, 1994]

§ 107.303 Purpose and scope.

This subchapter describes the various enforcement authorities exercised by the Associate Administrator for Hazardous Materials Safety and the Office of Chief Counsel and the associated sanctions and prescribes the procedures governing the exercise of those authorities and the imposition of those sanctions.

[Amdt. 107–11, 48 FR 2651, Jan. 20, 1983, as amended by Amdt. 107–15, 51 FR 34986, Oct. 1, 1986; Amdt. 107–24, 56 FR 8621, Feb. 28, 1991]

§ 107.305 Investigations.

(a) *General.* In accordance with its delegated authority under part 1 of this title, the Associate Administrator for Hazardous Materials Safety may initiate investigations relating to compliance by any person with any provisions of this subchapter or subchapter C of this chapter, or any exemption, approval, or order issued thereunder, or any court decree relating thereto. The Associate Administrator for Hazardous Materials Safety encourages voluntary production of documents in accordance with and subject to § 107.13, and hearings may be conducted, and depositions taken pursuant to 49 U.S.C. 5121(a). The Associate Administrator for Hazardous Materials Safety may conduct investigative conferences and hearings in the course of any investigation.

(b) *Investigations and Inspections.* Investigations under 49 U.S.C. 5121(a) are conducted by personnel duly authorized for that purpose by the Associate Administrator. Inspections under 49 U.S.C. 5121(c) are conducted by Hazardous Materials Enforcement Specialists, also known as ''hazmat inspectors'' or ''inspectors,'' whom the Associate Administrator has designated for that purpose.

(1) An inspector will, on request, present his or her credentials for examination, but the credentials may not be reproduced.

(2) An inspector may administer oaths and receive affirmations in any matter under investigation by the Associate Administrator.

(3) An inspector may gather information by reasonable means including, but not limited to, interviews, statements, photocopying, photography, and video- and audio-recording.

(4) With concurrence of the Director, Office of Hazardous Materials Enforcement, Research and Special Programs Administration, an inspector may issue a subpoena for the production of documentary or other tangible evidence if, on the basis of information available to the inspector, the documents and evidence materially will advance a determination of compliance with this subchapter or subchapter C. Service of a subpoena shall be in accordance with § 107.13 (c) and (d). A person to whom a subpoena is directed may seek review of the subpoena by applying to the Office of Chief Counsel in accordance with § 107.13(h). A subpoena issued under this paragraph may be enforced in accordance with § 107.13(i).

(c) *Notification.* Any person who is the subject of an Associate Administrator for Hazardous Materials Safety investigation and who is requested to furnish information or documentary evidence is notified as to the general purpose for which the information or evidence is sought.

(d) *Termination.* When the facts disclosed by an investigation indicate that further action is unnecessary or unwarranted at that time, the person being investigated is notified and the investigative file is closed without prejudice to further investigation by

the Associate Administrator for Hazardous Materials Safety.

(e) *Confidentiality*. Information received in an investigation under this section, including the identity of the person investigated and any other person who provides information during the investigation, shall remain confidential under the investigatory file exception, or other appropriate exception, to the public disclosure requirements of 5 U.S.C. 552.

[Amdt. 107–11, 48 FR 2651, Jan. 20, 1983, as amended by Amdt. 107–24, 56 FR 8621, Feb. 28, 1991; Amdt. 107–32, 59 FR 49131, Sept. 26, 1994; Amdt. 107–38, 61 FR 21099, May 9, 1996]

COMPLIANCE ORDERS AND CIVIL PENALTIES

§ 107.307 General.

(a) When the Associate Administrator for Hazardous Materials Safety and the Office of the Chief Counsel have reason to believe that a person is knowingly engaging or has knowingly engaged in conduct which is a violation of the Federal hazardous material transportation law or any provision of this subchapter or subchapter C of this chapter, or any exemption, or order issued thereunder, for which the Associate Administrator for Hazardous Materials Safety or the Office of the Chief Counsel exercise enforcement authority, they may—

(1) Issue a warning letter, as provided in § 107.309;

(2) Initiate proceedings to assess a civil penalty, as provided in either §§ 107.310 or 107.311;

(3) Issue an order directing compliance, regardless of whether a warning letter has been issued or a civil penalty assessed; and

(4) Seek any other remedy available under the Federal hazardous material transportation law.

(b) In the case of a proceeding initiated for failure to comply with an exemption, the allegation of a violation of a term or condition thereof is considered by the Associate Administrator for Hazardous Materials Safety and the Office of the Chief Counsel to constitute an allegation that the exemption holder or party to the exemption is failing, or has failed to comply with the underlying regulations from which relief was granted by the exemption.

[Amdt. 107–11, 48 FR 2651, Jan. 20, 1983, as amended by Amdt. 107–32, 59 FR 49131, Sept. 26, 1994; Amdt. 107–36, 61 FR 7183, Feb. 26, 1996]

§ 107.309 Warning letters.

(a) The Associate Administrator for Hazardous Materials Safety may issue a warning letter to any person whom the Associate Administrator for Hazardous Materials Safety believes to have committed a probable violation of the Federal hazardous material transportation law or any provision of this subchapter, subchapter C of this chapter, or any exemption issued thereunder.

(b) A warning letter issued under this section includes:

(1) A statement of the facts upon which the Associate Administrator for Hazardous Materials Safety bases its determination that the person has committed a probable violation;

(2) A statement that the recurrence of the probable violations cited may subject the person to enforcement action; and

(3) An opportunity to respond to the warning letter by submitting pertinent information or explanations concerning the probable violations cited therein.

[Amdt. 107–11, 48 FR 2651, Jan. 20, 1983, as amended by Amdt. 107–15, 51 FR 34986, Oct. 1, 1986; Amdt. 107–24, 56 FR 8621, Feb. 28, 1991; Amdt. 107–32, 59 FR 49131, Sept. 26, 1994; Amdt. 107–36, 61 FR 7183, Feb. 26, 1996]

§ 107.310 Ticketing.

(a) For an alleged violation that does not have a direct or substantial impact on safety, the Associate Administrator for Hazardous Materials Safety may issue a ticket.

(b) The Associate Administrator for Hazardous Materials Safety issues a ticket by mailing it by certified or registered mail to the person alleged to have committed the violation. The ticket includes:

(1) A statement of the facts on which the Associate Administrator bases the conclusion that the person has committed the alleged violation;

(2) The maximum penalty provided for by statute, the proposed full penalty determined according to RSPA's civil penalty guidelines and the statutory criteria for penalty assessment, and the ticket penalty amount; and

(3) A statement that within 45 days of receipt of the ticket, the person must pay the penalty in accordance with paragraph (d) of this section, make an informal response under § 107.317, or request a formal administrative hearing under § 107.319.

(c) If the person makes an informal response or requests a formal administrative hearing, the Associate Administrator for Hazardous Materials Safety forwards the inspection report, ticket and response to the Office of the Chief Counsel for processing under §§ 107.307–107.339, except that the Office of the Chief Counsel will not issue a Notice of Probable Violation under § 107.311. The Office of the Chief Counsel may impose a civil penalty that does not exceed the proposed full penalty set forth in the ticket.

(d) Payment of the ticket penalty amount must be made in accordance with the instructions on the ticket.

(e) If within 45 days of receiving the ticket the person does not pay the ticket amount, make an informal response, or request a formal administrative hearing, the person has waived the right to make an informal response or request a hearing, has admitted the violation and owes the ticket penalty amount to RSPA.

[Amdt. 107–36, 61 FR 7183, Feb. 26, 1996]

§ 107.311 Notice of probable violation.

(a) The Office of Chief Counsel may serve a notice of probable violation on a person alleging the violation of one or more provisions of the Federal hazardous material transportation law or any provision of this subchapter or subchapter C of this chapter, or any exemption, or order issued thereunder.

(b) A notice of probable violation issued under this section includes the following information:

(1) A citation of the provisions of the Federal hazardous material transportation law, an order issued thereunder, this subchapter, subchapter C of this chapter, or the terms of any exemption issued thereunder which the Office of Chief Counsel believes the respondent is violating or has violated.

(2) A statement of the factual allegations upon which the demand for remedial action, a civil penalty, or both, is based.

(3) A statement of the respondent's right to present written or oral explanations, information, and arguments in answer to the allegations and in mitigation of the sanction sought in the notice of probable violation.

(4) A statement of the respondent's right to request a hearing and the procedures for requesting a hearing.

(5) In addition, in the case of a notice of probable violation proposing a compliance order, a statement of the proposed actions to be taken by the respondent to achieve compliance.

(6) In addition, in the case of a notice of probable violation proposing a civil penalty:

(i) A statement of the maximum civil penalty for which the respondent may be liable;

(ii) The amount of the preliminary civil penalty being sought by the Office of Chief Counsel, constitutes the maximum amount the Chief Counsel may seek throughout the proceeding; and

(iii) A description of the manner in which the respondent makes payment of any money due the United States as a result of the proceeding.

(c) The Office of Chief Counsel may amend a notice of probable violation at any time before issuance of a compliance order or an order assessing a civil penalty. If the Office of Chief Counsel alleges any new material facts or seeks new or additional remedial action or an increase in the amount of the proposed civil penalty, it issues a new notice of probable violation under this section.

[Amdt. 107–11, 48 FR 2651, Jan. 20, 1983, as amended at 50 FR 45730, Nov. 1, 1985; Amdt. 107–24, 56 FR 8624, Feb. 28, 1991; Amdt. 107–32, 59 FR 49131, Sept. 26, 1994; Amdt. 107–35, 60 FR 49108, Sept. 21, 1995; Amdt. 107–36, 61 FR 7184, Feb. 26, 1996]

§ 107.313 Reply.

(a) Within 30 days of receipt of a notice of probable violation, the respondent must either:

(1) Admit the violation under § 107.315;

(2) Make an informal response under § 107.317; or

(3) Request a hearing under § 107.319.

(b) Failure of the respondent to file a reply as provided in this section constitutes a waiver of the respondent's right to appear and contest the allegations and authorizes the Chief Counsel, without further notice to the respondent, to find the facts to be as alleged in the notice of probable violation and issue an order directing compliance or assess a civil penalty, or, if proposed in the notice, both. Failure to request a hearing under paragraph (a)(3) of this section constitutes a waiver of the respondent's right to a hearing.

(c) Upon the request of the respondent, the Office of Chief Counsel may, for good cause shown and filed within the 30 days prescribed in the notice of probable violation, extend the 30-day response period.

§ 107.315 Admission of violations.

(a) In responding to a notice of probable violation issued under § 107.311, the respondent may admit the alleged violations and agree to accept the terms of a proposed compliance order or to pay the amount of the preliminarily assessed civil penalty, or, if proposed in the notice, both.

(b) If the respondent agrees to the terms of a proposed compliance order, the Chief Counsel issues a final order prescribing the remedial action to be taken by the respondent.

(c) Payment of a civil penalty, when the amount of the penalty exceeds $10,000, must be made by wire transfer, through the Federal Reserve Communications System (Fedwire), to the account of the U.S. Treasury. Detailed instructions on making payments by wire transfer may be obtained from the Financial Operations Division (AMZ–320), Federal Aviation Administration, Mike Monroney Aeronautical Center, P.O. Box 25880, Oklahoma City, OK 73125.

(d) Payment of a civil penalty, when the amount of the penalty is $10,000 or less, must be made either by wire transfer, as set forth in paragraph (c) of this section, or certified check or money order payable to ''U.S. Department of Transportation'' and submitted to the Financial Operations Division (AMZ–320), Federal Aviation Administration, Mike Monroney Aeronautical Center, P.O. Box 25880, Oklahoma City, OK 73125.

[Amdt. 107–11, 48 FR 2651, Jan. 20, 1983, as amended by Amdt. 107–23, 57 FR 45453, Oct. 1, 1992; Amdt. 107–29, 58 FR 51527, Oct. 1, 1993; Amdt. 107–38, 61 FR 21100, May 9, 1996]

§ 107.317 Informal response.

(a) In responding to a notice of probable violation under § 107.311, the respondent may submit to the official who issued the notice, written explanations, information, or arguments in response to the allegations, the terms of a proposed compliance order, or the amount of the preliminarily assessed civil penalty.

(b) The respondent may include in his informal response a request for a conference. Upon the request of the respondent, the conference may be either in person or by telephone. A request for a conference must set forth the issues the respondent will raise at the conference.

(c) Upon receipt of a request for a conference under paragraph (b) of this section, the Chief Counsel's Office, in consultation with the Associate Administrator for Hazardous Materials Safety, arranges for a conference as soon as practicable at a time and place of mutual convenience.

(d) The respondent's written explanations, information, and arguments as well as the respondent's presentation at a conference are considered by the Chief Counsel in reviewing the notice of probable violation. Based upon a review of the proceeding, the Chief Counsel may dismiss the notice of probable violation in whole or in part. If he does not dismiss it in whole, he issues an order directing compliance or assessing a civil penalty, or, if proposed in the notice, both.

[Amdt. 107–11, 48 FR 2651, Jan. 20, 1983, as amended by Amdt. 107–23, 56 FR 66157, Dec. 20, 1991]

§ 107.319 Request for a hearing.

(a) In responding to a notice of probable violation under § 107.311, the respondent may request a formal administrative hearing on the record before an Administrative Law Judge (ALJ)

obtained by the Office of the Chief Counsel.

(b) A request for a hearing under paragraph (a) of this section must:

(1) State the name and address of the respondent and of the person submitting the request if different from the respondent;

(2) State which allegations of violations, if any, are admitted; and

(3) State generally the issues to be raised by the respondent at the hearing. Issues not raised in the request are not barred from presentation at the hearing; and

(4) Be addressed to the official who issued the notice.

(c) After a request for a hearing that complies with the requirements of paragraph (b) of this section, the Chief Counsel obtains an ALJ to preside over the hearing and notifies the respondent of this fact. Upon assignment of an ALJ, further matters in the proceeding generally are conducted by and through the ALJ, except that the Chief Counsel and respondent may compromise or settle the case under § 107.327 of this subpart without order of the ALJ or voluntarily dismiss the case under Rule 41(a)(1) of the Federal Rules of Civil Procedure without order of the ALJ; in the event of such a compromise, settlement or dismissal, the Chief Counsel expeditiously will notify the ALJ thereof.

(d) At any time after requesting a formal administrative hearing but prior to the issuance of a decision and final order by the ALJ, the respondent may withdraw such request in writing, thereby terminating the jurisdication of the ALJ in the case. Such a withdrawal constitutes an irrevocable waiver of respondent's right to such a hearing on the facts, allegations, and proposed sanction presented in the notice of probable violation to which the request for hearing relates.

[Amdt. 107–11, 48 FR 2651, Jan. 20, 1983, as amended at 48 FR 17094, Apr. 21, 1983; Amdt. No. 107–19, 54 FR 22899, May 30, 1989]

§ 107.321 Hearing.

(a) To the extent practicable, the hearing is held in the general vicinity of the place where the alleged violation occurred or at a place convenient to the respondent. Testimony by witnesses shall be given under oath and the hearing shall be recorded verbatim.

(b) Hearings are conducted in accordance with the Federal Rules of Evidence and Federal Rules of Civil Procedure; however, the ALJ may modify them as he determines necessary in the interest of a full development of the facts. In addition, the ALJ may:

(1) Administer oaths and affirmations;

(2) Issue subpoenas as provided by § 107.13;

(3) Adopt procedures for the submission of motions, evidence, and other documents pertinent to the proceeding;

(4) Take or cause depositions to be taken;

(5) Rule on offers of proof and receive relevant evidence;

(6) Examine witnesses at the hearing;

(7) Convene, recess, reconvene, adjourn and otherwise regulate the course of the hearing;

(8) Hold conferences for settlement, simplification of the issues, or any other proper purpose; and

(9) Take any other action authorized by, or consistent with, the provisions of this subpart and permitted by law which may expedite the hearing or aid in the disposition of an issue raised therein.

(c) The official who issued the notice of probable violation, or his representative, has the burden of proving the facts alleged therein.

(d) The respondent may appear and be heard on his own behalf or through counsel of his choice. The respondent or his counsel may offer relevant information including testimony which he believes should be considered in opposition to the allegations or which may bear on the sanction being sought and conduct such cross-examination as may be required for a full disclosure of the facts.

§ 107.323 ALJ's decision.

(a) After consideration of all matters of record in the proceeding, the ALJ shall issue an order dismissing the notice of probable violation in whole or in part or granting the sanction sought by the Office of Chief Counsel in the notice. If the ALJ does not dismiss the notice of probable violation in whole, he issues an order directing compliance

or assessing a civil penalty, or, if proposed in the notice, both. The order includes a statement of the findings and conclusions, and the reasons therefore, on all material issues of fact, law, and discretion.

(b) If, within 20 days of receipt of an order issued under paragraph (a) of this section, the respondent does not submit in writing his acceptance of the terms of an order directing compliance, or, where appropriate, pay a civil penalty, or file an appeal under § 107.325, the case may be referred to the Attorney General with a request that an action be brought in the appropriate United States District Court to enforce the terms of a compliance order or collect the civil penalty.

§ 107.325 Appeals.

(a) *Hearing proceedings.* A party aggrieved by an ALJ's decision and order issued under § 107.323, may file a written appeal in accordance with paragraph (c) of this section with the Administrator, Research and Special Programs Administration (RSPA), 400 Seventh Street, SW., Washington, DC 20590–0001.

(b) *Non-Hearing proceedings.* A respondent aggrieved by an order issued under § 107.317, may file a written appeal in accordance with paragraph (c) of this section with the Administrator, RSPA, 400 Seventh Street, SW., Washington, DC 20590–0001.

(c) An appeal of an order issued under this subpart must:

(1) Be filed within 20 days of receipt of the order by the appealing party; and

(2) State with particularity the findings in the order that the appealing party challenges, and include all information and arguments pertinent thereto.

(d) If the Administrator, RSPA, affirms the order in whole or in part, the respondent must comply with the terms of the decision within 20 days of the respondent's receipt thereof, or within the time prescribed in the order. If the respondent does not comply with the terms of the decision within 20 days of receipt, or within the time prescribed in the order, the case may be referred to the Attorney General for action to enforce the terms of the decision.

(e) The filing of an appeal stays the effectiveness of an order issued under § 107.317 or § 107.323. However, if the Administrator, RSPA, determines that it is in the public interest, he may keep an order directing compliance in force pending appeal.

[][Amdt. 107–11, 48 FR 2651, Jan. 20, 1983, as amended at 50 FR 45730, Nov. 1, 1985; Amdt. 107–22, 55 FR 39978, Oct. 1, 1990]

§ 107.327 Compromise and settlement.

(a) At any time before an order issued under § 107.317 or § 107.323 is referred to the Attorney General for enforcement, the respondent or the Office of Chief Counsel may propose a compromise as follows:

(1) In civil penalty cases, the respondent or Chief Counsel may offer to compromise the amount of the penalty by submitting an offer for a specific amount to the other party. An offer of compromise by the respondent shall be submitted to the Chief Counsel who may, after consultation with Associate Administrator for Hazardous Materials Safety, accept or reject it.

(i) A compromise offer stays the running of any response period then outstanding.

(ii) If a compromise is agreed to by the parties, the respondent is notified in writing. Upon receipt of payment by Office of Chief Counsel, the respondent is notified in writing that acceptance of payment is in full satisfaction of the civil penalty proposed or assessed, and Office of Chief Counsel closes the case with prejudice to the respondent.

(iii) If a compromise cannot be agreed to, the respondent is notified in writing and is given 10 days or the amount of time remaining in the then outstanding response period, whichever is longer, to respond to whatever action was taken by the Office of Chief Counsel or the Administrator, RSPA.

(2) In compliance order cases, the respondent may propose a consent agreement to the Chief Counsel. If the Chief Counsel accepts the agreement, he issues an order in accordance with its terms. If the Chief Counsel rejects the agreement, he directs that the proceeding continue. An agreement submitted to the Chief Counsel must include:

(i) A statement of any allegations of fact which the respondent challenges;

(ii) The reasons why the terms of a compliance order or proposed compliance order are or would be too burdensome for the respondent, or why such terms are not supported by the record in the case;

(iii) A proposed compliance order suitable for issuance by the Chief Counsel;

(iv) An admission of all jurisdictional facts; and

(v) An express waiver of further procedural steps and all right to seek judicial review or otherwise challenge or contest the validity of the order.

(b) Notwithstanding paragraph (a)(1) of this section, the respondent or Office of Chief Counsel may propose to settle the case. If the Chief Counsel agrees to a settlement, the respondent is notified and the case is closed without prejudice to the respondent.

[Amdt. 107–11, 48 FR 2651, Jan. 20, 1983, as amended at 50 FR 45730, Nov. 1, 1985; Amdt. 107–24, 56 FR 8621, Feb. 28, 1991; 56 FR 15510, Apr. 17, 1991; Amdt. 107–29, 58 FR 51527, Oct. 1, 1993]

§ 107.329 Maximum penalties.

(a) A person who knowingly violates a requirement of the Federal hazardous material transportation law, an order issued thereunder, this subchapter, subchapter C of this chapter, or an exemption issued under this subchapter applicable to the transporting of hazardous materials or the causing of them to be transported or shipped is liable for a civil penalty of not more than $25,000 ($27,500 for a violation occurring after January 21, 1997) and not less than $250 for each violation. When the violation is a continuing one, each day of the violation constitutes a separate offense.

(b) A person who knowingly violates a requirement of the Federal hazardous material transportation law, and order issued thereunder, this subchapter, subchapter C of this chapter, or an exemption issued under this subchapter applicable to the manufacture, fabrication, marking, maintenance, reconditioning, repair, or testing of a packaging or container which is represented, marked, certified or sold by that person as being qualified for use in the transportation of hazardous materials in commerce is liable for a civil penalty of not more than $25,000 ($27,500 for a violation occurring after January 21, 1997) and not less than $250 for each violation.

[Amdt. 107–24, 56 FR 8624, Feb. 28, 1991, as amended by Amdt. 107–32, 59 FR 49131, Sept. 26, 1994; Amdt. 17–40, 62 FR 2971, Jan. 21, 1997]

§ 107.331 Assessment considerations.

After finding a knowing violation under this subpart, the Office of Chief Counsel assesses a civil penalty taking the following into account:

(a) The nature and circumstances of the violation;

(b) The extent and gravity of the violation;

(c) The degree of the respondent's culpability;

(d) The respondent's prior violations;

(e) The respondent's ability to pay;

(f) The effect on the respondent's ability to continue in business; and

(g) Such other matters as justice may require.

[Amdt. 107–11, 48 FR 2651, Jan. 20, 1983, as amended by Amdt. 107–30, 58 FR 50500, Sept. 27, 1993; Amdt. 107–38, 61 FR 21100, May 9, 1996]

CRIMINAL PENALTIES

§ 107.333 Criminal penalties generally.

A person who knowingly violates § 171.2(g) or willfully violates a provision of the Federal hazardous material transportation law or an order or regulation issued thereunder shall be fined under title 18, United States Code, or imprisoned for not more than 5 years, or both.

[Amdt. 107–11, 48 FR 2651, Jan. 20, 1983, as amended by Amdt. 107–32, 59 FR 49131, Sept. 26, 1994]

§ 107.335 Referral for prosecution.

If the Associate Administrator for Hazardous Materials Safety becomes aware of a possible willful violation of the Federal hazardous material transportation law, this subchapter, subchapter C of this chapter, or any exemption, or order issued thereunder, for which the Associate Administrator for Hazardous Materials Safety exercises enforcement responsibility, it shall report it to the Office of the Chief

Counsel, Research and Special Programs Administration, U.S. Department of Transportation, Washington, DC 20590–0001. If appropriate, the Chief Counsel refers the report to the Department of Justice for criminal prosecution of the offender.

[Amdt. 107–11, 48 FR 2651, Jan. 20, 1983, as amended by Amdt. 107–22, 55 FR 39978, Oct. 1, 1990; Amdt. 107–24, 56 FR 8621, Feb. 28, 1991; 56 FR 15510, Apr. 17, 1991; Amdt. 107–32, 59 FR 49131, Sept. 26, 1994; Amdt. 107–35, 60 FR 49108, Sept. 21, 1995]

§ 107.336 Limitation on fines and penalties.

If a State or political subdivision or Indian tribe assesses any fine or penalty determined by the Secretary to be appropriate for a violation concerning a subject listed in § 107.202(a), no additional fine or penalty may be assessed for such violation by any other authority.

[Amdt. 107–24, 56 FR 8624, Feb. 28, 1991]

INJUNCTIVE ACTION

§ 107.337 Injunctions generally.

Whenever it appears to the Office of Chief Counsel that a person has engaged, or is engaged, or is about to engage in any act or practice constituting a violation of any provision of the Federal hazardous material transportation law, this subchapter, subchapter C of this chapter, or any exemption, or order issued thereunder, for which the Office of Chief Counsel exercises enforcement responsibility, the Administrator, RSPA, or his delegate, may request the Attorney General to bring an action in the appropriate United States District Court for such relief as is necessary or appropriate, including mandatory or prohibitive injunctive relief, interim equitable relief, and punitive damages as provided by 49 U.S.C. 5122(a).

[Amdt. 107–11, 48 FR 2651, Jan. 20, 1983, as amended by Amdt. 107–32, 59 FR 49131, Sept. 26, 1994]

§ 107.339 Imminent hazards.

Whenever it appears to the Office of the Chief Counsel that there is a substantial likelihood that death, serious illness, or severe personal injury will result from the transportation of a particular hazardous material or hazardous materials container, before a compliance order proceeding or other administrative hearing or formal proceeding to abate the risk of that harm can be completed, the Administrator, RSPA, or his delegate, may bring an action under 49 U.S.C. 5122(b) in the appropriate United States District Court for an order suspending or restricting the transporation of that hazardous material or those containers or for such other equitable relief as is necessary or appropriate to ameliorate the hazard.

[Amdt. 107–11, 48 FR 2651, Jan. 20, 1983, as amended by Amdt. 107–15, 51 FR 34987, Oct. 1, 1986; Amdt. 107–32, 59 FR 49131, Sept. 26, 1994]

APPENDIX A TO SUBPART D OF PART 107—GUIDELINES FOR CIVIL PENALTIES

I. This appendix sets forth the guidelines used by the Office of Hazardous Materials Safety (as of January 18, 1995) in making initial baseline determinations for recommending civil penalties. The first part of these guidelines is a list of baseline amounts or ranges for probable violations frequently cited in enforcement reports referred for action. Following the list of violations are general guidelines used by OHMS in making initial penalty determinations in enforcement cases.

II. LIST OF FREQUENTLY CITED VIOLATIONS

Violation description	Section or cite	Baseline assessment
PART 107—REQUIREMENTS		
Failure to register as a carrier or shipper of hazardous material	107.608	$1,000 +, $500 each add'l year.
PART 171—REQUIREMENTS		
Failure to give immediate telephone notice of a reportable hazardous materials incident.	171.15	$3,000.
Failure to file a DOT 5800.1 Hazardous Materials Incident Report within 30 days following an unintentional release of hazardous materials in transportation.	171.16	$500 to $2,500.

Violation description	Section or cite	Baseline assessment
PART 172—REQUIREMENTS		
Shipping Papers (§ 172.200—172.205):		
Failure to execute a shipping paper for a shipment of hazardous materials	172.201	$3,000 to $6,000.
Failure to follow one or more of the three approved formats for listing hazardous materials on a shipping paper.	172.201(a)(1)	$1,200.
Failure to include a proper shipping name in the shipping description or using an incorrect proper shipping name.	172.202	$800 to $1,600.
Failure to include a hazard class/division number in the shipping description.	172.202	$1,000 to $2,000.
Using an incorrect hazard class/identification number	172.202.	
-that does not affect compatibility requirements		$800,
-that affects compatibility requirements		$3,000 to $6,000.
Failure to include an identification number in the shipping description	172.202	$1,000 to $2,000.
Using an incorrect identification number	172.202.	
-that does not change the response information		$800,
-that changes the response information		$3,000 to $6,000.
Using a shipping description that includes additional unauthorized information (extra or incorrect words).	172.202	$800.
Using a shipping description not in required sequence	172.202	$500.
Using a shipping description with two or more required elements missing or incorrect.	172.202	
-such that the material is misdescribed		$3,000.
-such that the material is misclassified		$6,000.
Failure to include the total quantity of hazardous material covered by a shipping description.	172.202(c)	$400.
The letters ''RQ'' are not used in the shipping description to identify materials that are hazardous substances.	172.203(c)(2)	$500.
Using a shipping description for Class 7 (radioactive) material that fails to contain the required additional entries, or contains incorrect information for these additional entries.	172.203(d)	$2,000 to $4,000.
Failure to include a required technical name in parentheses for a listed generic or ''nos'' material.	172.203(k)	$1,000.
Failure to list an exemption number in association with the shipping description.	172.203(a)	$800.
Failure to include the required shipper's certification on a shipping paper	172.204(a)	$1,000.
Failure to execute the required shipper's certification on a shipping paper	172.204	$800.
Emergency Response Information Requirements (§ 172.600—172.604):		
Providing or listing incorrect emergency response information with or on a shipping paper.	172.602.	
-no significant difference in response		$800,
-significant difference in response		$3,000 to $6,000.
Failure to include an emergency response telephone number on a shipping paper.	172.604	$2,600.
Failure to have the emergency response telephone number monitored while a hazardous material is in transportation or listing multiple telephone numbers (without specifying the times for each) that are not monitored 24 hours a day.	172.604	$1,300.
Listing a fraudulent emergency response telephone number on a shipping paper.	172.604	$2,600 to $4,200.
Listing an incorrect or non-working emergency response telephone number on a shipping paper.	172.604	$1,300.
Failure to provide required technical information when the listed emergency response telephone number is contacted.	172.604	$1,300.
Package Marking Requirements (§ 172.300—172.338):		
Failure to mark the proper shipping name on a package or marking an incorrect shipping name on a package.	172.301(a)	$800 to $1,600.
Failure to mark the identification number on a package	172.301(a)	$1,000 to $2,000.
Marking a package with an incorrect identification number	172.301(a).	
-that does not change the response information		$800,
-that changes the response information		$3,000 to $6,000.
Failure to mark the proper shipping name and identification number on a package.	172.301(a)	$3,000 to $6,000.
Marking a package with an incorrect shipping name and identification number.	172.301(a).	
-that does not change the response information		$1,500 to $3,000.
-that changes the response information		$3,000 to $6,000.
Failure to include the required technical name(s) in parentheses for a listed generic or ''no'' entry.	172.301(c)	$1,000.
Failure to mark a package containing liquid hazardous materials with required orientation marks.	172.312	$2,500 to $3,500.
Package Labeling Requirements (§ 172.400–172.450):		
Failure to label a package.	172.400	$5,000.

Violation description	Section or cite	Baseline assessment
Placing a label that represents a hazard other than the hazard presented by the hazardous material in the package..	172.400	$5,000.
Placing a label on a package that does not contain a hazardous material.	172.401(a)	$800.
Placing a label on Class 7 (radioactive) material that understates the proper label category..	172.403	$5,000.
Placing a label on Class 7 (radioactive) material that fails to contain, or has erroneous, entries for the name of the radionuclide(s), activity, and transport index..	172.403(g)	$2,000 to $4,000.
Placing a label not conforming to size requirements on a package.	172.407(c)	$800.
Placing a label on a different surface of the package than, or far away from, the proper shipping name..	172.406(a)	$800.
Placing a label that does not meet color specification requirements on a package (depending on the variance)..	172.407(d)	$600 to $2,500.
Failure to place a required subsidiary label on a package.	172.402	$500 to $2,500.
Failure to provide an appropriate class or division number on a label.	172.411	$2,500.
Placarding Requirements (§172.500–172.560):		
Failure to properly placard a freight container or vehicle containing hazardous materials when Table 1 is applicable..	172.504	$1,000 to $9,000.
Failure to properly placard a freight container or vehicle containing hazardous materials when Table 2 is applicable..	172.504	$800 to $7,500.
Training Requirements (§172.700–172.704):		
Failure to train hazmat employees in the three required areas of training	172.702	
-more than 10 hazmat employees.		$2,400 and up.
-10 hazmat employees or less.		$1,500 and up.
Failure to train hazmat employees in any one of the three required areas of training.	172.702	
-more than 10 hazmat employees.		$800 and up.
-10 hazmat employees or less.		$500 and up.
Failure to maintain training records	172.704.	
-more than 10 hazmat employees.		800 and up.
-10 hazmat employees or less.		$500 and up.
PART 173—REQUIREMENTS		
Overpack Requirements (§173.25)		
Failure to mark an overpack with a statement indicating that the inside packages comply with prescribed specifications when specification packaging is required..	173.25(a)(4)	$3,000.
Reconditioner Requirements (§173.28):		
Representing, marking, or certifying a drum as a reconditioned UN standard packaging, when the drum did not meet a UN standard..	173.28(c) & (d)	$6,000 to $10,800.
Marking an incorrect registration number on a reconditioned packaging	173.28(b)(2)(ii)	
-incorrect number.		$800.
-fraudulent use of another reconditioner's number.		$7,200.
Failure to properly conduct alternate leakage test	173.28(b)(2)(i)	
-improper test.		$2,000.
-no test at all.		$4,000.
Representing, marking, or certifying a drum as altered from one standard to another, when the drum had not actually been altered..	173.28(d)	$500.
Portable and IM Tank Requirements (§§173.32(e), 173.32c, 173.315)		
Offering hazardous materials for transportation in a DOT specification or exemption portable tank which is out of test..	173.32(a)(1), 173.315(a), Applicable Exemption.	$3,500 to $7,000.
Offering an IM portable tank for transportation that has not been hydrostatically tested within the last 2½ years per 173.32b(a)..	173.32c(c)	$3,500.
Offering an IM portable tank for transportation that has not been visually inspected in last five years per 173.32b(b)..	173.32c(c)	$3,500.
Offering an IM portable tank for transportation that has not been visually or hydrostatically tested as required, or failing to remove the safety relief valves during testing..	173.32c(c)	$7,000.
Offering a hazardous material for transportation in an IM portable tank equipped with bottom outlets, when the material contained is prohibited from being offered in this type of packaging.	173.32c(g)	
-Packing Group II.		$7,000.
-Packing Group III.		$5,000.
Failure to provide the required outage for a shipment of hazardous materials, that results in the release of hazardous materials..	173.32c(k)	$6,000 to $12,000.
Offering a hazardous material for transportation in an DOT, exemption, or IM portable tank which fails to bear markings that it has been properly retested..	173.32(e)(3), 173.32b(d).	$3,000.
Cylinder Retesters (§§173.23, 173.34, and 173.302):		
Failure to remark as DOT 3AL an aluminum cylinder manufactured under a former exemption..	173.23(c)	$600.
Certifying or marking as retested a nonspecification cylinder	173.34	$800.

Violation description	Section or cite	Baseline assessment
Marking a cylinder in or on the sidewall area when not permitted by the applicable specification.	173.34(c)(1)	$6,000 to $10,800.
Failure to maintain legible markings on a cylinder	173.34(c)	$800.
Failure to perform hydrostatic retesting at the minimum of 5/3 times the service pressure, or at the minimum specified test pressure.	173.34(e)	$2,100 to $5,200.
Failure to conduct a complete visual external and internal examination	173.34(e)(3)	$2,100 to $5,200.
Failure to have a retester's identification number (RIN)	173.34(e)(2)(i)	$4,000.
Failure to have current authority due to failure to renew a retester's identification number.	173.34)(e)(2)(i)	$2,000.
Failure to have a retester's identification number and marking another RIN on a cylinder.	173.34(e)(2)(i)	$7,200.
Marking a RIN before successfully completing a hydrostatic retest	173.34(e)(1)(ii)	$800.
Requalifying a DOT cylinder without performing the visual inspection or hydrostatic retest.	173.34(e)(1)(ii)	$4,200 to $10,400.
Performing hydrostatic retesting without demonstrating the accuracy of the testing equipment.	173.34(e)(4)	$2,100 to $5,200.
Failure to hold hydrostatic test pressure for 30 seconds or sufficiently longer to allow for complete expansion.	173.34(e)(4)	$3,100.
Failure to perform a second retest, after equipment failure, at a pressure of 10% more or 100 psi more, whichever is less (includes exceeding 90% of test pressure prior to conducting a retest).	173.34(e)(4)	$3,100.
Failure to condemn a cylinder with permanent expansion of 10% or greater (5% for certain exemption cylinders); failure to condemn cylinders with evidence of internal or external corrosion, denting, bulging, or rough usage.	173.34(e)(6)	$10,000.
Marking an FRP cylinder with steel stamps in the FRP area of the cylinder such that the integrity of the cylinder is compromised.	Applicable Exemption	$6,000 to $10,800.
Failure to keep complete and accurate records of cylinder reinspection and retest.		
—No records kept		$4,000.
—Incomplete or inaccurate records	173.34(e)(8)	$1,000 to $3,000.
Improper marking of the RIN or retest date on a cylinder	173.34(e)(7)	$800
Marking a DOT 3HT cylinder with a steel stamp other than a low-stress steel stamp.	173.34(e)(15)	$6,000 to $10,800.
Marking a "+" sign on a cylinder without determining the average or maximum wall stress, by calculation or reference to CGA Pamphlet C–5.	173.302(c)(3)	$3,000 to $4,000.
Representing, marking, or certifying a cylinder as meeting the requirements of an exemption, when the cylinder was not maintained or retested in accordance with the exemption.	171.2(c), Applicable Exemption.	$2,000 to $6,000.
Rebuilder Requirements (§173.34):		
Representing a DOT–4 series cylinder as meeting the requirements of the Hazardous Materials Regulations without being authorized to do so by the Associate Administrator for Hazardous Materials Safety.	173.34(l)	$6,000 to $10,800.
Offeror Requirements (General):		
Offering a hazardous material for transportation in an unauthorized non-UN standard or nonspecification packaging (includes the failure to comply with the terms of an exemption authorizing the use of a nonstandard or nonspecification packaging).	Various	
—Packing Group I (includes §172 504 Table 1 materials)		$9,000.
—Packing Group II		$7,000.
-Packing Group III		$5,000.
Offering a hazardous material for transportation in a packaging that has successfully been tested to an applicable UN standard, but is not marked with the required UN marking.	178.3(a), 178.503(a)	$3,600.
Offering a hazardous material for transportation in a packaging that leaks during conditions normally incident to transportation.	173.24(b)	
—Packing Group I (includes §172.504 Table 2 materials)		$12,000.
—Packing Group II		$9,000.
—Packing Group III		$6,000.
Overfilling a package so that the effectiveness is substantially reduced	173.24(b)	
—Packing Group I (includes §172.504 Table 1 materials)		$9,000.
—Packing Group II		$6,000.
—Packing Group III		$3,000.
Offering a hazardous material for transportation after October 1, 1996, in an unauthorized non-UN standard packaging marked as manufactured to a DOT specification.	171.14	
—packaging meets DOT specification		$3,000.
—packaging does not meet DOT specification		$5,000 to $9,000.
Offeror Requirements (Class 1—Explosives):		
Failing to mark the "EX" approval number on a package containing an explosive.	172.320	$1,200.
Offering an unapproved explosive for transportation	173.54 and 173.56(b)	

Violation description	Section or cite	Baseline assessment
—Div 1.3 & 1.4 fireworks meeting the chemistry requirements (both quantity and type) of APA Standard 87–1.		$5,0000 to $10,000.
—all other explosives (including forbidden explosives)		$10,000 to $27,500.
Offering a leaking or damaged package of explosives for transportation	173.54(c)	$10,000 to $27,500.
Offeror Requirements (Class 7—Radioactive Materials):		
Offering a DOT specification 7A packaging without maintaining complete documentation of tests and an engineering evaluation or comparative data.	173.415(a), 173.461	
-tests and evaluation not performed		$8,400.
-complete records not maintained		$2,000 to $5,000.
Offering a Type B packaging without holding a valid NRC approval certificate.	173.471(a)	
-never having obtained one		$2,500.
-holding an expired certificate		$1,000.
Offering a limited quantity of radioactive materials without marking the inner (or single) packaging ''Radioactive.''	177.421(d)	$5,000 and up.
Offering low specific activity (LSA) radioactive materials consigned as exclusive use without providing instructions for maintenance of exclusive use shipment controls.	173.427(a)(6)	$800.
Offering a package that exceeds the permitted limits for surface radiation or transport index.	173.441	$10,000 and up.
Offering a package without determining the level of removable external contamination, or that exceeds the limit for removable external contamination.	173.443	$5,000 and up.
Storing packages of radioactive material in a group with a total transport index more than 50.	173.447(a)	$5,000 and up.
Offering special form radioactive materials without maintaining a complete safety analysis or Certificate of Competent Authority.	173.476(a) & (b)	$2,500.
Offeror Requirements (Cylinders):		
Offering a compressed gas for transportation in a cylinder that is out of test.	173.301(c)	$4,200 to $10,400.
Failure to check each day the pressure of a cylinder charged with acetylene that is representative of that day's compression, after the cylinder has cooled to a settled temperature, or failure to keep a record of this test for at least 30 days.	173.303(d)	$5,000.
Offering a limited quantity of a compressed gas in a metal container for the purpose of propelling a nonpoisonous material and failing to heat the cylinder until the pressure is equivalent to the equilibrium pressure at 130° F, without evidence of leakage, distortion, or other defect.	173.306(a)(3), (h)	$1,500 to $6,000.
PART 178—REQUIREMENTS		
Third-Party Packaging Certifiers (General):		
Issuing a certification that directs the packaging manufacturer to improperly mark a packaging (*e.g.,* steel drum to be marked UN 4G).	1171.2(e), 1178.2(b), 178.3(a), 178.503(a).	$500 per item.
Manufacturers (General):		
Failure to insure a packaging certified as meeting the UN standard is capable of passing the required performance testing.	178.601(b)	
—Packing Group I (includes § 172.504 Table 1 materials)		$10,800.
—Packing Group II		$8,400.
—Packing Group III		$6,000.
Certifying a packaging as meeting a UN standard when design qualification testing was not performed.	178.601(d)	
—Packing Group I (includes §172 504 Table 2 materials)		$10,800.
—Packing Group II		$8,400.
—Packing Group III		$6,000.
Failure to conduct periodic retesting on UN standard packaging (depending on length of time and Packing Group).	178.601(e)	$2,000 to $10,800.
Failure to properly conduct testing for UN standard packaging (*e.g.*, testing with less weight than marked on packaging; drop testing from lesser height than required; failing to condition fiberboard boxes before design test).		
—design qualification testing	178.601(d)	$2,000 to $10,800.
—periodic retesting	178.601(e)	$500 to $10,800.
Marking, or causing the marking of, a packaging with the symbol of a manufacturer or packaging certifier other than the company that actually manufactured or certified the packaging.	178.2(b), 178.3(a), 178.503(a)(8).	$7,200.
Failure to maintain testing records	178.601(1)	
—design qualification testing		$1,000 to $5,000.
—periodic retesting		$500 to $2,000.
Improper marking of UN certification	178.503	$500 per item.
Manufacturing DOT specification packaging after October 1, 1994 that is not marked as meeting a UN performance standard.	171.14	

Violation description	Section or cite	Baseline assessment
—if packaging does meet DOT specification		$3,000.
—if packaging does not meet DOT specification		$6,000 to $10,800.
Manufacturing Requirements—Drums		
Failure to properly conduct production leakproofness test	178.604(b)(1)	
—improper testing	173.28	$2,000.
—no testing performed		$2,000 to $10,800.
Manufacturing Requirements—Cylinders		
Manufacturing, representing, marking, certifying, or selling a DOT high-pressure cylinder that was not inspected and verified by an approved independent inspection agency.	Various	$7,500 to $15,000.
Failure to have a registration number or failure to mark the registration number on the cylinder.	Various	$800.
Marking another company's number on a cylinder	Various	$7,200.
Failure to mark the date of manufacture or lot number on a DOT–39 cylinder.	178.65	$3,000.
Failure to have a chemical analysis performed in the US for a material manufactured outside the US/failure to obtain a chemical analysis from the foreign manufacturer.	Various	$5,000.
Failure to meet wall thickness requirements	Various	$7,500 to $15,000.
Failure to heat treat cylinders prior to testing	Various	$5,000 to $15,000.
Failure to conduct a complete visual internal examination	Various	$2,500 to $6,200.
Failure to conduct a hydrostatic test, or conducting a hydrostatic test with inaccurate test equipment.	Various	$2,500 to $6,200.
Failure to conduct a flattening test	Various	$7,500 to $15,000.
Failure to conduct a burst test on a DOT–39 cylinder	178.65–11	$5,000 to $15,000.
Failure to have inspections and verifications performed by an inspector	Various	$7,500 to $15,000.
Failure to maintain a required inspector's reports	Various	
—no reports at all		$5,000.
—incomplete or inaccurate reports		$1,000 to $4,000.
Other Requirements		
Carrier Requirements:		
Transporting packages of hazardous materials that have not been secured against movement within the vehicle.	177.834(a) & (g)	$3,000.
Transporting explosives in a motor vehicle containing metal or other articles or materials likely to damage such explosives or any package in which they are contained, without segregating in different parts of the load or securing them in place in or on the motor vehicle and separated by bulkheads or other suitable means to prevent such damage.	177.835(i)	$5,200.
Transporting railway track torpedoes outside of flagging kits, in violation of E–7991.	171.2(b)	$7,000.
Transporting Class 7 (radioactive) material having a total transport index more than 50.	177.842(a)	$5,000 and up.
Transporting Class 7 (radioactive) material without maintaining the required separation distance.	177.842(b)	$5,000 and up.
Failing to comply with requirements of an exemption authorizing the transportation of Class 7 (radioactive) material having a total transport index more than 50.	171.2(b)	
-failure to have the radiation survey record required by ¶¶ 7(f), 8(b)(3)		$5,000.
-failure to have other accompanying documents required by ¶ 8(b)		$500 each.
-other violations of ¶¶ 7 and 8		$5,000 and up.
Exemptions:		
Offering or transporting hazardous materials, or otherwise performing a function, covered by an exemption after expiration of the exemption.	171.2(a), (b), (c), Various.	$1,000 + $500 each add'l year.

III. CONSIDERATION OF STATUTORY CRITERIA

A. These guidelines are used by the Office of Hazardous Materials Safety (OHMS) in setting initial proposed penalties for hazmat violations. They indicate baseline amounts or ranges for probable violations frequently cited in enforcement reports and set forth general OHMS policy for considering statutory criteria.

B. The initial baseline determination partially considers the nature, extent, circumstances, and gravity of the alleged violation. That determination then is adjusted to consider all other evidence concerning the nature, extent, circumstances, and gravity of the alleged violation; degree of culpability; history of prior violations; ability to pay; effect of the penalty on ability to continue to do business; and such other matters as justice may require (a major component of which is corrective action taken by a respondent to prevent a recurrence of similar violations). In making a penalty recommendation, the baseline or range may be increased or decreased on the basis of evidence pertaining to these factors.

C. The following miscellaneous factors are used to implement one or more of the statutory assessment criteria.

IV. Miscellaneous Factors Affecting Penalty Amounts

A. Corrective Action

1. A proposed penalty is mitigated for documented corrective action of alleged violations taken by a respondent. Corrective action may occur: (1) After an inspection and before a Notice of Probable Violation (NOPV) is issued; (2) on receipt of an NOPV; or (3) after receipt of an NOPV (possibly after it is solicited by an RSPA attorney). In general, corrective action may reduce a penalty up to 25%. Mitigation may be taken into account in the referral memo or may be recommended prior to issuance of an Order by RSPA's Chief Counsel.

2. The two primary factors in determining the penalty reduction are extent and timing of the corrective action. In other words, mitigation will be determined on the basis of how much corrective action was taken and when it was taken. Systemic action to prevent future violations is given greater consideration than action simply to remedy violations identified during the inspection.

3. Mitigation is applied to individual violations. Thus, in a case with two violations, if corrective action for the first violation is more extensive than for the second, the penalty for the first will be mitigated more than that for the second.

B. Respondents That Re-Ship

A shipper that reships materials received from another company, in the same packaging and without opening or altering the package, independently is responsible for ensuring that the shipment complies with Federal hazmat law, and independently may be subject to enforcement action if the package does not comply. Nevertheless, the reshipper is considered to have a lesser level of responsibility for compliance in those respects in which it reasonably relies on the compliance of the package as received. In most cases of this type, OHMS will discount the applicable baseline standard by about 25%. The specific knowledge and expertise of all parties must be considered in discounting for reliance on a prior shipper. This discount is applied before any consideration of mitigation based on corrective action.

C. Penalty Increases for Multiple Counts

Under the Federal hazmat law, 49 U.S.C. 5213(a), each violation of the HMR and each day of a continuing violation (except for violations pertaining to packaging manufacture or qualification) is subject to a civil penalty of up to $25,000 ($25,500 for a violation occurring after January 21, 1997). Absent aggravating factors, OHMS, in its exercise of discretion, ordinarily will apply a single penalty for multiple counts or days of violation. In a number of cases, particularly those involving shippers, an inspector may cite two or more similar packaging violations for different hazardous materials. For example, the inspector may cite the same marking violation for two or more packages. OHMS usually will consider those additional violations as counts of the same violation and will not recommend multiples of the same baseline penalty. Rather, OHMS usually will recommend the baseline penalty for a single violation, increased by 25% for each additional violation.

D. Financial Considerations

1. Mitigation is appropriate when the baseline penalty would (1) exceed an amount that the respondent is able to pay, or (2) have an adverse effect on the respondent's ability to continue in business. These criteria relate to a respondent's entire business, and not just the product line or part of its operations involved in the violation(s). Beyond the overall financial size of the respondent's business, the relevant items of information on a respondent's balance sheet include the current ratio (current assets to current liabilities), the nature of current assets, and net worth (total assets minus total liabilities).

2. These figures are considered on a case-by-case basis. In general, however, a current ratio close to or below 1.0 means that the company may have difficulty in paying a large penalty, and may justify reduction of the penalty or an installment payment plan. A small amount of cash on hand representing limited liquidity, even with substantial other current assets (such as accounts receivable or inventory), may warrant a short-term payment plan. Respondent's income statement also will be reviewed to determine whether a payment plan is appropriate.

3. Many companies are able to continue in business for extended periods of time with a small or negative net worth, and many respondents have paid substantial civil penalties in installments even though net worth was negative. For this reason, negative net worth alone does not always warrant reduction of a proposed penalty or even, in the absence of factors discussed above, a payment plan.

4. In general, an installment payment plan may be justified where reduction of a proposed penalty is not, but the appropriateness of either (or both) will depend on the circumstances of the case. The length of a payment plan should be as short as possible, but the plan may consider seasonal fluctuations in a company's income if the company's business is seasonal (e.g., swimming pool chemical sales, fireworks sales) or if the company has documented specific reasons for current non-liquidity.

5. Evidence of financial condition is used only to decrease a penalty, and not to increase it.

E. Penalty Increases for Prior Violations

1. The baseline penalty presumes an absence of prior violations. If prior violations exist, generally they will serve to increase a proposed penalty. The general standard for increasing a baseline proposed penalty on the basis of prior violations is as follows:

a. One prior case—25% increase over the pre-mitigation recommended penalty
b. Two prior cases—50% increase over the pre-mitigation recommended penalty
c. Three prior cases—75% increase over the pre-mitigation recommended penalty
d. Four or more prior cases—100% increase over the pre-mitigation recommended penalty

2. A case of prior violations closed more than five years previously normally will not be considered in determining a proposed penalty.

F. Penalty Increases for Use of Expired Exemptions

Adjustments to the base line figures for use of expired exemptions can be made depending on how much material has been shipped during the period between the expiration date and the renewal date. If the company previously has been found to have operated under an expired exemption, the penalty is normally doubled. If the company has been previously cited for other violations, the penalty generally will be increased by about 25%.

[Amdt. 107–33, 60 FR 12141, Mar. 6, 1995, as amended by Amdt. 107–40, 62 FR 2972, 2977, Jan. 21, 1997; 62 FR 51556, Oct. 1, 1997]

Subpart E—Designation of Approval and Certification Agencies

§ 107.401 Purpose and scope.

(a) This subpart establishes procedures for the designation of agencies to issue approval certificates and certifications for types of packagings designed, manufactured, tested, or maintained in conformance with the requirements of this subchapter, subchapter C of this chapter, and standards set forth in the United Nations (U.N.) Recommendations (Transport of Dangerous Goods). Except for certifications of compliance with U.N. packaging standards, this subpart does not apply unless made applicable by a rule in subchapter C of this chapter.

(b) The Associate Administrator for Hazardous Materials Safety may issue approval certificates and certifications addressed in paragraph (a) of this section.

[Amdt. 107–31, 50 FR 10062, Mar. 13, 1985, as amended by Amdt. 107–23, 56 FR 66157, Dec. 20, 1991]

§ 107.402 Application for designation as an approval or certification agency.

(a) Any organization or person seeking designation as an approval or certification agency shall apply in writing to the Associate Administrator for Hazardous Materials Safety (DHM–32), Department of Transportation, 400 Seventh Street, SW., Washington DC 20590–0001. Each application must be signed and certified to be correct by the applicant or, if the applicant is an organization, by an authorized officer or official representative of the organization. Any false statement or representation, or the knowing and willful concealment of a material fact, may subject the applicant to prosecution under the provisions of 18 U.S.C. 1001, result in the denial or termination of a designation.

(b) Each application for designation must be in English and include the following information:

(1) Name and address of the applicant, including place of incorporation if a corporation. In addition, if the applicant is not a resident of the United States, the name and address of a permanent resident of the United States designated in accordance with § 107.7 to serve as agent for service of process.

(2) If the applicant's principal place of business is in a country other than the United States, a copy of the designation from the Competent Authority of that country delegating to the applicant an approval or designated agency authority for the type of packaging for which a DOT designation is sought, and a statement that the Competent Authority also delegates similar authority to U.S. Citizens or organizations having designations under this subpart from the RSPA.

(3) A listing, by DOT specification (or exemption) number, or U.N. designation, of the types of packagings for which approval authority is sought.

(4) A personnel qualifications plan listing the qualifications that the applicant will require of each person to be used in the performance of each packaging approval or certification function. As a minimum, these qualifications must include:

(i) The ability to review and evaluate design drawings, design and stress calculations;

(ii) A knowledge of the applicable regulations of subchapter C of this chapter and, when applicable, U.N. standards; and

(iii) The ability to conduct or monitor and evaluate test procedures and results; and

(iv) The ability to review and evaluate the qualifications of materials and fabrication procedures.

(5) A statement that the applicant will perform its functions independent of the manufacturers and owners of the packagings concerned.

(6) A statement that the applicant will allow the Associate Administrator for Hazardous Materials Safety or his representative to inspect its records and facilities in so far as they relate to the approval or certification of specification packagings and shall cooperate in the conduct of such inspections.

(c) The applicant shall furnish any additional information relevant to the applicant's qualifications, if requested by the Associate Administrator for Hazardous Materials Safety.

[Amdt. 107–13, 50 FR 10062, Mar. 13, 1985; 50 FR 16089, Apr. 24, 1985, as amended by Amdt. 107–22, 55 FR 39978, Oct. 1, 1990; Amdt. 107–23, 56 FR 66157, Dec. 20, 1991]

§ 107.403 Designation of approval agencies.

(a) If the Associate Administrator for Hazardous Materials Safety determines that an application contains all the required information, the applicant is sent a letter of designation and assigned an identification code.

(b) If the Associate Administrator for Hazardous Materials Safety determines that an application does not contain all the required information, the application is denied and the applicant is sent a written notice containing all the reasons for the denial.

(c) Within 30 days of an initial denial of an application under paragraph (b) of this section, the applicant may file an amended application. If after considering the amended application, the Associate Administrator for Hazardous Materials Safety determines that it should be denied, he notifies the applicant, and the denial constitutes the final action of the Associate Administrator for Hazardous Materials Safety on the application. Within 60 days of receipt of the final denial the applicant may appeal the denial to the Administrator, RSPA, setting forth in writing where the Associate Administrator for Hazardous Materials Safety erred in this determination.

[Amdt. 107–13, 50 FR 10062, Mar. 13, 1985, as amended by Amdt. 107–23, 56 FR 66157, Dec. 20, 1991; Amdt. 107–32, 59 FR 49131, Sept. 26, 1994]

§ 107.404 Conditions of designation.

(a) Each designation made under this subpart contains the following conditions:

(1) The designated approval or certification agency may use only testing equipment that it has determined, through personal inspection, to be suitable for the purpose.

(2) Each approval certificate and certification issued by the designated approval agency must contain the name and identification code of the approval agency.

(3) Each approval certificate and certification must be in a format acceptable to the Associate Administrator for Hazardous Materials Safety.

(b) The designated approval agency shall notify the Associate Administrator for Hazardous Materials Safety within 20 days after the date there is any change in the information submitted under § 107.402.

(c) The designated approval agency shall comply with all of the terms and conditions stated in its letter of designation under the subpart.

(d) Nothing in this part relieves a manufacturer or owner of a packaging of responsibility for compliance with any of the applicable requirements of this title.

[Amdt. 107–13, 50 FR 10062, Mar. 13, 1985, as amended by Amdt. 107–23, 56 FR 66157, Dec. 20, 1991]

§ 107.405 Termination of designation.

(a) Any designation issued under § 107.403 of this subchapter may be suspended or terminated if the Associate Administrator for Hazardous Materials Safety determines that:

(1) The application for designation contained a misrepresentation, or the applicant willfully concealed a material fact.

(2) The approval agency failed to comply with a term or condition stated in the agency's letter of designation.

(3) The Competent Authority of an approval agency of a country outside the United States has failed to initiate, maintain or recognize a qualified U.S. approval agency.

(b) Before a designation is suspended or terminated, the Associate Administrator for Hazardous Materials Safety shall give to the approval agency:

(1) Written notice of the facts or conduct believed to warrant suspension or termination of the designation.

(2) Sixty days in which to show in writing why the designation should not be suspended or terminated.

[Amdt. 107–13, 50 FR 10062, Mar. 13, 1985, as amended by Amdt. 107–23, 56 FR 66157, Dec. 20, 1991]

Subpart F—Registration of Cargo Tank and Cargo Tank Motor Vehicle Manufacturers and Repairers and Cargo Tank Motor Vehicle Assemblers

§ 107.501 Scope.

(a) This subpart establishes a registration procedure for persons who are engaged in the manufacture, assembly, inspection and testing, certification, or repair of a cargo tank or a cargo tank motor vehicle manufactured in accordance with a DOT specification under subchapter C of this chapter or under terms of an exemption issued under this part.

(b) Persons engaged in continuing qualification and maintenance of cargo tanks and cargo tank motor vehicles must be familiar with the requirements set forth in part 180, subpart E, of this chapter.

[Amdt. 107–20, 55 FR 37047, Sept. 7, 1990]

§ 107.502 General registration requirements.

(a) *Definitions:* For purposes of this subpart—

(1) *Assembly* means the assembly of one or more tanks or cargo tanks to a motor vehicle or to a motor vehicle suspension component and involves no welding on the cargo tank wall.

(2) The terms *Authorized Inspector, Cargo tank, Cargo tank motor vehicle, Design Certifying Engineer, Registered Inspector,* and *Person* are defined in § 171.8 of this chapter.

(3) The terms *cargo tank wall* and *manufacturer* are defined in § 178.320(a), and *repair* is defined in § 180.403 of this chapter.

(b) No person may engage in the manufacture, assembly, certification, inspection or repair of a cargo tank or cargo tank motor vehicle manufactured under the terms of a DOT specification under subchapter C of this chapter or an exemption issued under this part unless the person is registered with the Department in accordance with the provisions of this subpart. A person employed as an inspector or design certifying engineer is considered to be registered if the person's employer is registered.

(c) A person who performs functions which are subject to the provisions of this subpart may perform only those functions which have been identified to the Department in accordance with the procedures of this subpart.

(d) Registration statements must be in English, contain all of the information required by this subpart, and be submitted to: Approvals Branch, Associate Administrator for Hazardous Materials Safety, Attn: DHM–32, Research and Special Programs Administration, Department of Transportation, Washington, DC 20590–0001.

(e) Upon determination that a registration statement contains all the information required by this subpart, the Department will send the registrant a letter confirming receipt of the registration application and assigning a registration number to that person. A separate registration number will be assigned for each cargo tank manufacturing, assembly, repair facility or

other place of business identified by the registrant.

[Amdt. 107–20, 54 FR 25003, June 12, 1989; 55 FR 37047, Sept. 7, 1990, as amended by Amdt. 107–22, 55 FR 39978, Oct. 1, 1990; Amdt. 107–23, 56 FR 66157, Dec. 20, 1991; Amdt. 107–28, 58 FR 46873, Sept. 3, 1993; Amdt. 107–39, 61 FR 51337, Oct. 1, 1996]

§ 107.503 Registration statement.

(a) Each registration statement must be in English and contain the following information:

(1) Name;

(2) Street address, mailing address and telephone number for each facility or place of business;

(3) A statement signed by the person responsible for compliance with the applicable requirements of this chapter, certifying knowledge of those requirements and that each employee who is a Registered Inspector or Design Certifying Engineer meets the minimum qualification requirements set forth in § 171.8 of this chapter for ''Registered Inspector'' or ''Design Certifying Engineer'', except as provided by § 107.502(f) of this part. The following language may be used.

I certify that all Registered Inspectors and Design Certifying Engineers used in performance of the prescribed functions meet the minimum qualification requirements set forth in 49 CFR 171.8, that I am the person responsible for ensuring compliance with the applicable requirements of this chapter, and that I have knowledge of the requirements applicable to the functions to be performed.

(4) A description of the specific functions to be performed on cargo tanks or cargo tank motor vehicles, e.g.:

(i) Manufacture,

(ii) Assembly,

(iii) Inspection and testing (specify type, e.g., external or internal visual inspection, lining inspection, hydrostatic pressure test, leakage test, thickness test),

(iv) Certification,

(v) Repair, or

(vi) Equipment manufacture;

(5) An identification of the types of DOT specification and exemption cargo tanks or cargo tank motor vehicles which the registrant intends to manufacture, assemble, repair, inspect, test or certify;

(6) A statement indicating whether the registrant employs Registered Inspectors or Design Certifying Engineers to conduct certification, inspection or testing functions addressed by this subpart. If the registrant engages a person who is not an employee of the registrant to perform these functions, provide the name, address and registration number of that person; and

(7) If the registrant is not a resident of the United States, the name and address of a permanent resident of the United States designated in accordance with § 107.7 to serve as agent for service of process.

(b) In addition to the information required under paragraph (a) of this section, each person who manufactures a cargo tank or cargo tank motor vehicle must submit a copy of the manufacturer's current ASME Certificate of Authorization for the use of the ASME ''U'' stamp.

(c) In addition to the information required under paragraph (a) of this section, each person who repairs a cargo tank or cargo tank motor vehicle must submit a copy of the repair facility's current National Board Certificate of Authorization for the use of the ''R'' stamp or ASME Certificate of Authorization for the use of the ASME ''U'' stamp. Any person who repairs MC-series cargo tanks which are not certified to the ASME Code must submit a copy of the National Board or ASME Certificate of Authorization to RSPA before June 30, 1992.

[Amdt. 107–20, 54 FR 25003, June 12, 1989; 55 FR 37047, Sept. 7, 1990; 57 FR 365, Jan. 6, 1992; Amdt. 107–32, 59 FR 49131, Sept. 26, 1994; Amdt. 107–39, 61 FR 51337, Oct. 1, 1996]

§ 107.504 Period of registration, updates, and record retention.

(a) Registration will be for a maximum of six years from the date of the original registration.

(b) Any correspondence with the Department must contain the registrant's name and registration number.

(c) A registration must be renewed every six years or within thirty days of reissuance of an ASME or National Board Certification, whichever occurs first, by submitting an up-to-date registration statement containing the information prescribed by § 107.503. Any person initially registered under the

provisions of § 107.502 and who is in good standing is eligible for renewal.

(d) A registrant shall provide written notification to the Department within thirty days of any of the following occurrences:

(1) Any change in the registration information submitted under § 107.503;

(2) Replacement of the person responsible for compliance with the requirements in § 107.503(a)(3). If this occurs, the registrant shall resubmit the required certification;

(3) Loss of ASME or National Board Certificate of Authorization;

or

(4) A change in function; such as, from assembly to manufacture, an addition of a function, or a change to the types of inspections, tests or certifications of cargo tanks or cargo tank motor vehicles.

(e) Each registrant shall maintain a current copy of the registration information submitted to the Department and a current copy of the registration number identification received from the Department at the location identified in § 107.503(a)(2) during such time the person is registered with the Department and for two years thereafter.

(f) The issuance of a registration number under this subpart is not an approval or endorsement by the Department of the qualifications of any person to perform the specified functions.

[Amdt. 107–20, 54 FR 25003, June 12, 1989; 55 FR 37048, Sept. 7, 1990, as amended by Amdt. 107–20, 56 FR 27875, June 17, 1991; Amdt. 107–37, 61 FR 18931, Apr. 29, 1996]

Subpart G—Registration of Persons Who Offer or Transport Hazardous Materials

SOURCE: Amdt. No. 107–26, 57 FR 30630, July 9, 1992, unless otherwise noted.

§ 107.601 Applicability.

The registration and fee requirements of this subpart apply to any person who offers for transportation, or transports, in foreign, interstate or intrastate commerce—

(a) Any highway route-controlled quantity of a Class 7 (radioactive) material, as defined in § 173.403 of this chapter;

(b) More than 25 kg (55 pounds) of a Division 1.1, 1.2, or 1.3 (explosive) material (see § 173.50 of this chapter) in a motor vehicle, rail car or freight container;

(c) More than one L (1.06 quarts) per package of a material extremely toxic by inhalation (i.e., ''material poisonous by inhalation,'' as defined in § 171.8 of this chapter, that meets the criteria for ''hazard zone A,'' as specified in §§ 173.116(a) or 173.133(a) of this chapter);

(d) A hazardous material in a bulk packaging (see § 171.8 of this chapter) having a capacity equal to or greater than 13,248 L (3,500 gallons) for liquids or gases or more than 13.24 cubic meters (468 cubic feet) for solids; or

(e) A shipment in other than a bulk packaging of 2,268 kg (5,000 pounds) gross weight or more of one class of hazardous materials for which placarding of a vehicle, rail car, or freight container is required for that class, under the provisions of subpart F of part 172 of this chapter. For applicability of this subpart, the term ''shipment'' means the offering or loading of a hazardous material at one loading facility using one transport vehicle, or the transport of that transport vehicle.

[Amdt. No. 107–26, 57 FR 30630, July 9, 1992, as amended at 57 FR 37902, Aug. 21, 1992; Amdt. 107–26, 58 FR 12545, Mar. 5, 1993; Amdt. 107–31, 59 FR 32932, June 27, 1994; Amdt. 107–34, 60 FR 27233, May 23, 1995; Amdt. 107–39, 61 FR 51337, Oct. 1, 1996]

§ 107.606 Exceptions.

(a) The following are excepted from the requirements of this subpart:

(1) An agency of the Federal government.

(2) A State agency.

(3) An agency of a political subdivision of a State.

(4) An employee of any of those agencies in paragraphs (a)(1) through (a)(3) of this section with respect to the employee's official duties.

(5) A hazmat employee (including, for purposes of this subpart, the owner-operator of a motor vehicle that transports in commerce hazardous materials, if that vehicle at the time of those activities, is leased to a registered motor carrier under a 30-day or longer lease as prescribed in 49 CFR

part 1057 or an equivalent contractual agreement).

(6) A person domiciled outside the United States, who offers solely from a location outside the United States, hazardous materials for transportation in commerce, *provided* that the country of which such a person is a domiciliary does not require persons domiciled in the United States, who solely offer hazardous materials for transportation to the foreign country from places in the United States, to file a registration statement or to pay a registration fee.

(b) Upon making a determination that persons domiciled in the United States, who offer hazardous materials for transportation to a foreign country solely from places in the United States, must file registration statements or pay fees to that foreign country, the U.S. Competent Authority will provide notice of such determination directly to the Competent Authority of that foreign country and by publication in the FEDERAL REGISTER. Persons who offer hazardous materials for transportation to the United States from that foreign country must file a registration statement and pay the required fee no later than 60 days following publication of the determination in the FEDERAL REGISTER.

[Amdt 107–34, 60 FR 27233, May 23, 1995]

§107.608 General registration requirements.

(a) Except as provided in §107.616(d), each person subject to this subpart must submit a complete and accurate registration statement on DOT Form F 5800.2 not later than June 30 for each registration year, or in time to comply with paragraph (b) of this section, whichever is later.

(b) After September 15, 1992, no person required to file a registration statement may transport or cause to be transported or shipped hazardous materials, unless such person has on file, in accordance with §107.620, a current annual Certificate of Registration in accordance with the requirements of this subpart.

(c) A registrant whose name or principal place of business has changed during the year of registration must notify RSPA of that change by submitting an amended registration statement not later than 30 days after the change.

(d) Copies of DOT Form F 5800.2 and instructions for its completion may be obtained from the Hazardous Materials Registration Program, DHM–60, U.S. Department of Transportation, Washington, DC 20590–0001 or by calling 617–494–2545 or 202–366–4109.

(e) If the registrant is not a resident of the United States, the registrant must attach to the registration statement the name and address of a permanent resident of the United States, designated in accordance with §107.7, to serve as agent for service of process.

[Amdt. No. 107–26, 57 FR 30630, July 9, 1992, as amended by Amdt. 107–31, 59 FR 32932, June 27, 1994]

§107.612 Amount of fee.

Each person subject to the requirements of this subpart must pay an annual fee of $300 (which includes a $50 processing fee).

§107.616 Payment procedures.

(a) Except as provided in paragraph (d) of this section, each person subject to the requirements of this subpart must mail the registration statement and payment in full to the U.S. Department of Transportation, Hazardous Materials Registration, P.O. Box 740188, Atlanta, Georgia 30374–0188. A registrant required to file an amended registration statement under §107.608(c) must mail it to the same address.

(b) Payment must be made by certified check, cashier's check, personal check, or money order in U.S. funds and drawn on a U.S. bank, payable to the U.S. Department of Transportation and identified as payment for the ''Hazmat Registration Fee'' or by a VISA or MasterCard credit card authorization completed and signed on the registration statement.

(c) Payment must correspond to the annual fee indicated in §107.612.

(d) A person may obtain a temporary registration number, valid for 45 days from the date of issuance, through an expedited registration process as follows:

(1) Contact RSPA by telephone (800–942–6990 or 617–494–2545) and provide name, principal place of business, and credit card payment information;

(2) Pay a $350 registration and processing fee (including a $50 expedited handling fee); and

(3) Submit a completed registration statement and proof of payment to RSPA before the expiration date of the temporary registration number.

[Amdt. 107–26, 57 FR 30630, July 9, 1992, as amended by Amdt. 107–26, 58 FR 12545, Mar. 5, 1993]

§ 107.620 Recordkeeping requirements.

(a) Each person subject to the requirements of this subpart, or its agent designated under § 107.608(e), must maintain at its principal place of business for a period of three years from the date of issuance of each Certificate of Registration:

(1) A copy of the registration statement filed with RSPA; and

(2) The Certificate of Registration issued to the registrant by RSPA.

(b) After January 1, 1993, each motor carrier subject to the requirements of this subpart must carry a copy of its current Certificate of Registration issued by RSPA or another document bearing the registration number identified as the ''U.S. DOT Hazmat Reg. No.'' on board each truck and truck tractor (not including trailers and semi-trailers) used to transport hazardous materials subject to the requirements of this subpart. The Certificate of Registration or document bearing the registration number must be made available, upon request, to enforcement personnel.

(c) In addition to the requirements of paragraph (a) of this section, after January 1, 1995, each person who transports by vessel a hazardous material subject to the requirements of this subpart must carry on board the vessel a copy of its current Certificate of Registration or another document bearing the current registration number identified as the ''U.S. DOT Hazmat Reg. No.''

(d) Each person subject to this subpart must furnish its Certificate of Registration (or a copy thereof) and all other records and information pertaining to the information contained in the registration statement to an authorized representative or special agent of DOT upon request.

[Amdt. No. 107–26, 57 FR 30630, July 9, 1992, as amended at 57 FR 37902, August 21, 1992; Amdt. 107–26, 58 FR 12545, Mar. 5, 1993; Amdt. 107–31, 59 FR 32932, June 27, 1994]

Subpart H—Approvals, Registrations and Submissions

SOURCE: Amdt. 107–38, 61 FR 21100, May 9, 1996, unless otherwise noted.

§ 107.701 Purpose and scope.

(a) This subpart prescribes procedures for the issuance, modification and termination of approvals, and the submission of registrations and reports, as required by this chapter.

(b) The procedures of this subpart are in addition to any requirements in subchapter C of this chapter applicable to a specific approval, registration or report. If compliance with both a specific requirement of subchapter C of this chapter and a procedure of this subpart is not possible, the specific requirement applies.

(c) Registration under subpart F or G of this part is not subject to the procedures of this subpart.

[Amdt. 107–38, 61 FR 21100, May 9, 1996; Amdt. 107–38, 61 FR 27948, June 3, 1996]

§ 107.705 Registrations, reports, and applications for approval.

(a) A person filing a registration, report, or application for an approval, or a renewal or modification of an approval subject to the provisions of this subpart must—

(1) File the registration, report, or application with the Associate Administrator for Hazardous Materials Safety, Research and Special Programs Administration, U.S. Department of Transportation, 400 7th Street, SW, Washington, DC 20590–0001, Attention: Approvals, DHM–32;

(2) Identify the section of the chapter under which the registration, report, or application is made;

(3) If a report is required by an approval, a registration or an exemption, identify the approval, registration or exemption number;

(4) Provide the name, street, mailing address, and telephone number of the

person on whose behalf the registration, report, or application is made and, if different, the person making the filing;

(5) If the person on whose behalf the filing is made is not a resident of the United States, provide a designation of agent for service in accordance with § 107.7;

(6) Provide a description of the activity for which the registration or report is required; and

(7) Provide additional information as requested by the Associate Administrator, if the Associate Administrator determines that a filing lacks pertinent information or otherwise does not comply with applicable requirements.

(b) In addition to the provisions in paragraph (a) for an approval, an application for an approval, or an application for modification or renewal of an approval, the applicant must provide—

(1) A description of the activity for which the approval is required;

(2) The proposed duration of the approval;

(3) The transport mode or modes affected, as applicable;

(4) Any additional information specified in the section containing the approval; and

(5) For an approval which provides exceptions from regulatory requirements or prohibitions—

(i) Identification of any increased risk to safety or property that may result if the approval is granted, and specification of the measures that the applicant considers necessary or appropriate to address that risk; and

(ii) Substantiation, with applicable analyses or evaluations, if appropriate, demonstrating that the proposed activity will achieve a level of safety that is at least equal to that required by the regulation.

(c) For an approval with an expiration date, each application for renewal or modification must be filed in the same manner as an original application. If a complete and conforming renewal application is filed at least 60 days before the expiration date of an approval, the Associate Administrator, on written request from the applicant, will issue a written extension to permit operation under the terms of the expired approval until a final decision on the application for renewal has been made. Operation under an expired approval is prohibited absent a written extension. This paragraph does not limit the authority of the Associate Administrator to modify, suspend or terminate an approval under § 107.713.

(d) To request confidential treatment for information contained in the application, the applicant shall comply with § 107.5(a).

§ 107.709 Processing of an application for approval, including an application for renewal or modification.

(a) No public hearing or other formal proceeding is required under this subpart before the disposition of an application.

(b) At any time during the processing of an application, the Associate Administrator may request additional information from the applicant. If the applicant does not respond to a written request for additional information within 30 days of the date the request was received, the application may be deemed incomplete and denied. However, if the applicant responds in writing within the 30-day period requesting an additional 30 days within which it will gather the requested information, the Associate Administrator may grant the 30-day extension.

(c) The Associate Administrator may grant or deny an application, in whole or in part. At the Associate Administrator's discretion, an application may be granted subject to provisions that are appropriate to protect health, safety and property. The Associate Administrator may impose additional provisions not specified in the application, or delete conditions in the application which are unnecessary.

(d) The Associate Administrator may grant an application on finding that—

(1) The application complies with this subpart;

(2) The application demonstrates that the proposed activity will achieve a level of safety that—

(i) Is at least equal to that required by the regulation, or

(ii) If the regulations do not establish a level of safety, is consistent with the

public interest and adequately will protect against the risks to life and property inherent in the transportation of hazardous materials in commerce;

(3) The application states all material facts, and contains no materially false or materially misleading statement;

(4) The applicant meets the qualifications required by applicable regulations; and

(5) The applicant is fit to conduct the activity authorized by the approval, or renewal or modification of approval. This assessment may be based on information in the application, prior compliance history of the applicant, and other information available to the Associate Administrator.

(e) Unless otherwise specified in this chapter or by the Associate Administrator, an approval in which a term is not specified does not expire.

(f) The Associate Administrator notifies the applicant in writing of the decision on the application. A denial contains a brief statement of reasons.

§ 107.711 Withdrawal.

An application may be withdrawn at any time before a decision to grant or deny it is made. Withdrawal of an application does not authorize the removal of any related records from the RSPA dockets or files. Applications that are eligible for confidential treatment under § 107.5 will remain confidential after the application is withdrawn. The duration of this confidential treatment for trade secrets and commercial or financial information is indefinite, unless the party requesting the confidential treatment of the materials notifies the Associate Administrator that the confidential treatment is no longer required.

§ 107.713 Approval modification, suspension or termination.

(a) The Associate Administrator may modify an approval on finding that—

(1) Modification is necessary to conform an existing approval to relevant statutes and regulations as they may be amended from time to time; or

(2) Modification is required by changed circumstances to enable the approval to continue to meet the standards of § 107.709(d).

(b) The Associate Administrator may modify, suspend or terminate an approval, as appropriate, on finding that—

(1) Because of a change in circumstances, the approval no longer is needed or no longer would be granted if applied for;

(2) The application contained inaccurate or incomplete information, and the approval would not have been granted had the application been accurate and complete;

(3) The application contained deliberately inaccurate or incomplete information; or

(4) The holder knowingly has violated the terms of the approval or an applicable requirement of this chapter in a manner demonstrating lack of fitness to conduct the activity for which the approval is required.

(c) Except as provided in paragraph (d) of this section, before an approval is modified, suspended or terminated, the Associate Administrator notifies the holder in writing of the proposed action and the reasons for it, and provides an opportunity to show cause why the proposed action should not be taken.

(1) The holder may file a written response with the Associate Administrator within 30 days of receipt of notice of the proposed action.

(2) After considering the holder's or party's written response, or after 30 days have passed without response since receipt of the notice, the Associate Administrator notifies the holder in writing of the final decision with a brief statement of reasons.

(d) The Associate Administrator, if necessary to avoid a risk of significant harm to persons or property, may in the notification declare the proposed action immediately effective.

§ 107.715 Reconsideration.

(a) An applicant or a holder may request that the Associate Administrator reconsider a decision under § 107.709(f) or § 107.713(c). The request must:

(1) Be in writing and filed within 20 days of receipt of the decision;

(2) State in detail any alleged errors of fact and law;

(3) Enclose any additional information needed to support the request to reconsider; and

(4) State in detail the modification of the final decision sought.

(b) The Associate Administrator considers newly submitted information on a showing that the information could not reasonably have been submitted during application processing.

(c) The Associate Administrator grants or denies, in whole or in part, the relief requested and informs the requesting person in writing of the decision.

§107.717 Appeal.

(a) A person who requested reconsideration under §107.715 may appeal to the Administrator the Associate Administrator's decision on the request. The appeal must:

(1) Be in writing and filed within 30 days of receipt of the Associate Administrator's decision on reconsideration;

(2) State in detail any alleged errors of fact and law;

(3) Enclose any additional information needed to support the appeal; and

(4) State in detail the modification of the final decision sought.

(b) The Administrator, if necessary to avoid a risk of significant harm to persons or property, may declare the Associate Administrator's action effective pending a decision on appeal.

(c) The Administrator grants or denies, in whole or in part, the relief requested and informs the appellant in writing of the decision on appeal. The Administrator's decision on appeal is the final administrative action.

PART 110—HAZARDOUS MATERIALS PUBLIC SECTOR TRAINING AND PLANNING GRANTS

Sec.

110.1 Purpose.
110.5 Scope.
110.7 Control Number under the Paperwork Reduction Act.
110.10 Eligibility.
110.20 Definitions.
110.30 Grant application.
110.40 Activities eligible for funding.
110.50 Disbursement of Federal funds.
110.60 Cost sharing for planning and training.
110.70 Financial administration.
110.80 Procurement.
110.90 Grant monitoring, reports, and records retention.
110.100 Enforcement.
110.110 After-grant requirements.
110.120 Deviation from this part.
110.130 Disputes.

AUTHORITY: 49 U.S.C. 5101–5127; 49 CFR 1.53.

SOURCE: Amdt. 110–1, 57 FR 43067, Sept. 17, 1992, unless otherwise noted.

§110.1 Purpose.

This part sets forth procedures for reimbursable grants for public sector planning and training in support of the emergency planning and training efforts of States, Indian tribes, and local communities to deal with hazardous materials emergencies, particularly those involving transportation. These grants will enhance the implementation of the Emergency Planning and Community Right-to-Know Act of 1986 (42 U.S.C. 11001).

§110.5 Scope.

(a) This part applies to States and Indian tribes and contains the program requirements for public sector training and planning grants to support hazardous materials emergency planning and training efforts.

(b) The requirements contained in 49 CFR part 18, ''Uniform Administrative Requirements for Grants and Cooperative Agreements to State and Local Governments'', apply to grants issued under this part.

(c) Copies of standard forms and OMB circulars referenced in this part are available from the HMTUSA Grants Manager, Research and Special Programs Administration, U.S. Department of Transportation, 400 Seventh Street, SW., Washington DC 20590–0001.

§110.7 Control Number under the Paperwork Reduction Act.

The Office of Management and Budget control number assigned to collection of information in §§110.30, 110.70, 110.80, and 110.90 is 2137–0586.

§110.10 Eligibility.

This Part applies to States and Indian tribes. States may apply for planning and training grants. Federally-recognized Indian tribes may apply for training grants.

§ 110.20 Definitions.

Unless defined in this part, all terms defined in 49 U.S.C. 5102 are used in their statutory meaning and all terms defined in 49 CFR part 18 and OMB Circular A–102, with respect to administrative requirements for grants, are used as defined therein. Other terms used in this part are defined as follows:

Allowable costs means those costs that are: eligible, reasonable, necessary, and allocable to the project permitted by the appropriate Federal cost principles, and approved in the grant.

Budget period means the period of time specified in the grant agreement during which the project manager may expend or obligate project funds.

Cost review means the review and evaluation of costs to determine reasonableness, allocability, and allowability.

Indian country means Indian country as defined in 18 U.S.C. 1151. That section defines Indian country as all land within the limits of any reservation under the jurisdiction of the U.S. Government, notwithstanding the issuance of any patent, and, including rights-of-way running through the reservation; all dependent Indian communities within the borders of the United States whether within the original or subsequently acquired territory thereof, and whether within or without the limits of a State; and all Indian allotments, the Indian titles to which have not been extinguished, including rights-of-way running through the same.

Indian tribe means a tribe ''Federally-recognized'' by the Secretary of the Interior under 25 CFR 272.2.

Local Emergency Planning Committee (LEPC) means a committee appointed by the State Emergency Response Commission under section 301(c) of the Emergency Planning and Community Right-to-Know Act of 1986 (42 U.S.C. 11001(c)) that includes at a minimum, representatives from each of the following groups or organizations: elected State and local officials; law enforcement, firefighting, civil defense, first aid, health, local environmental, hospital, and transportation personnel; broadcast and print media; community groups; and owners and operators of facilities subject to the emergency planning requirements.

National curriculum means the curriculum required to be developed under 49 U.S.C. 5115 and necessary to train public sector emergency response and preparedness teams, enabling them to comply with performance standards as stated in 49 U.S.C. 5115(c).

Political subdivision means a county, municipality, city, town, township, local public authority (including any public and Indian housing agency under the United States Housing Act of 1937 (42 U.S.C. 1401 *et seq.*), school district, special district, intrastate district, council of governments (whether or not incorporated as a nonprofit corporation under State law), any other regional or interstate government entity, or any agency or instrumentality of a local government.

Project means the activities and tasks identified in the grant agreement.

Project manager means the State or Indian tribal official designated in a grant as the recipient agency's principal program contact with the Federal Government.

Project officer means the Federal official designated in a grant as the program contact with the project manager. The project officer is responsible for monitoring the project.

Project period means the length of time specified in a grant for completion of all work associated with that project.

State Emergency Response Commission (SERC) means the State Emergency Response Commission appointed by the Governor of each State and Territory under the Emergency Planning and Community Right-to-Know Act of 1986.

Statement of Work means that portion of a grant that describes the purpose and scope of activities and tasks to be carried out as part of the proposed project.

[Amdt. 110–1, 57 FR 43067, Sept. 17, 1992, as amended by Amdt. 110–3, 59 FR 49132, Sept. 26, 1994]

§ 110.30 Grant application.

(a) *General.* An applicant for a planning or training grant shall use only the standard application forms approved by the Office of Management and Budget (OMB) (SF–424 and SF–424A) under the Paperwork Reduction Act of 1980 (44 U.S.C. 3502). Applicants

are required to submit an original and two copies of the application package to: Grants Manager, Research and Special Programs Administration, U.S. Department of Transportation, 400 7th Street, SW., Washington, DC 20590–0001. Applications received on or before January 1st and July 1st of each year will be considered in that cycle of the semi-annual review and award process. An initial round of the review and award process will consider applications received on or before November 15, 1992. Requests and continuation applications must include an original and two copies of the affected pages; previously submitted pages with information that is still current do not have to be resubmitted. The application must include the following:

(1) Application for Federal Assistance for non-construction programs (SF–424) and Budget sheets (SF–424A). A single application may be used for both planning and training if the budgets for each are entered separately on all budget sheets.

(2) For States, a letter from the Governor designating the State agency that is authorized to apply for a grant and to provide the written certifications required to receive a grant.

(3) For Indian tribes, a letter from the tribal government, governing body, or tribal council to the effect that the applicant is authorized to apply for a grant and to provide the written certifications required to receive a grant.

(4) A written statement explaining whether the State or tribe assesses and collects fees on the transportation of hazardous materials and whether such assessments or fees are used solely to carry out purposes related to the transportation of hazardous materials.

(5) A statement designating a project manager and providing the name, position, address and phone number of that individual who will be responsible for coordinating the funded activities with other agencies/organizations.

(6) A project narrative statement of the goals and objectives of the proposed project, project design, and long range plans. The proposed grant project and budget periods may be one or more years.

(7) A statement of work in support of the proposed project that describes and sets priorities for the activities and tasks to be conducted, the costs associated with each activity, the number and types of deliverables and products to be completed, and a schedule for implementation.

(8) A description of the major items of costs needed to implement the statement of work and a copy of any cost or price analysis if conducted.

(9) *Drug-Free Workplace Certification.* The applicant must certify as specified in appendix C of 49 CFR part 29 that it will comply with the Drug-Free Workplace Act of 1988 (Pub. L. 100–690, title V, subtitle D; 51 U.S.C. 701 *et seq.*).

(10) *Anti-Lobbying Certification.* The applicant must certify as specified in appendix A of 49 CFR part 20 that no Federal funds will be expended to pay any person for influencing or attempting to influence an officer or employee of any agency, a Member of Congress, an officer or employee of Congress, or an employee of a Member of Congress (section 319 of Pub. L. 101–121, 31 U.S.C. 1352).

(11) *Debarment and Suspension Certification.* The applicant must certify as specified in subpart G of 49 CFR part 29 that it will not make an award or permit any award to any party which is debarred or suspended or is otherwise excluded from or ineligible for participation in Federal assistance programs.

(b) *Planning.* In addition to the requirements specified in paragraph (a) of this section, eligible State applicants must include the following in their application package:

(1) A written certification that the State is complying with sections 301 and 303 of the Emergency Planning and Community Right-to-Know Act of 1986, including a brief explanation of how compliance has been achieved.

(2) A written statement specifying the aggregate expenditure of funds of the State, exclusive of Federal funds, for each of its last two fiscal years for developing, improving, and implementing emergency plans under the Emergency Planning and Community Right-to-Know Act of 1986, including an explanation specifying the sources of these funds. A written certification that the State's aggregate expenditures, as defined by the State, of funds for this purpose, exclusive of Federal

funds, will not fall below the average level of its expenditures for its last two fiscal years. The applicant may not claim any of these expenditures for cost-sharing.

(3) A written statement agreeing to make at least 75 percent of the Federal funds awarded available to LEPCs and an explanation of how the applicant intends to make such funds available to them for developing, improving, or implementing emergency plans.

(4) Designation of a project manager to serve as contact for coordinating planning funds under this program.

(5) A project narrative statement of the goals and objectives of each proposed project, including the following:

(i) A background statement describing the applicant's long-term goals and objectives with respect to:

(A) The current abilities and authorities of the applicant's program for preparedness planning;

(B) The need to sustain or increase program capability;

(C) Current degree of participation in or intention to assess the need for a regional hazardous materials emergency response team; and

(D) The impact that the grant will have on the program.

(ii) A discussion of whether the applicant's program currently knows, or intends to assess, transportation flow patterns of hazardous materials within the State and between that State and another State.

(iii) A schedule for implementing the proposed grant activities.

(iv) A statement describing the ways in which planning will be monitored by the project manager.

(v) A statement indicating that all members of the State Emergency Response Commission were provided the opportunity to review the grant application.

(c) *Training.* In addition to the requirements specified in paragraph (a) of this section, eligible State and Indian tribe applicants must include the following in their application package:

(1) For a State applicant, a written certification explaining how the State is complying with sections 301 and 303 of the Emergency Planning and Community Right-to-Know Act.

(2) A written statement specifying the aggregate expenditure of funds of the State or Indian tribe, exclusive of Federal funds, for each of its last two fiscal years for training public sector employees to respond to accidents and incidents involving hazardous materials, including an explanation specifying the sources of these funds. A written certification that the applicant's aggregate expenditure, as defined by the State or tribe, of funds for this purpose, exclusive of Federal funds, will not fall below the average level of its expenditures for its last two fiscal years. The applicant may not claim any of these expenditures for cost-sharing purposes.

(3) For a State applicant, a written statement agreeing to make at least 75 percent of the Federal funds awarded available for the purpose of training public sector employees employed or used by political subdivisions. A State applicant may elect to pass all or some portion of the grant on to political subdivisions for this purpose. The applicant must include a specific explanation of how it intends to meet this requirement.

(4) Designation of a primary point of contact for coordinating training funded under this program. Identification of a single repository for copies of course materials delivered under the grant as specified in § 110.90 of this part.

(5) A project narrative statement of the long-range goals and objectives of each proposed project, including the following:

(i) A background statement describing:

(A) The current hazardous materials training program(s);

(B) Training audience, including numbers and levels of training and accreditation program for each level or criterion required to advance to the next level;

(C) Estimated total number of persons to be trained under the proposed project;

(D) The ways in which training grants will support the integrated delivery of training to meet the needs of individualized geographic and resource needs and time considerations of local

responders. When appropriate, a statement describing how the proposed project will accommodate the different training needs for rural versus urban environments; and

(E) The impact that the grant and the National Curriculum will have on the program.

(ii) A statement describing how the National Curriculum will be used or modified to train public sector employees at the local level to respond to accidents and incidents involving hazardous materials.

(iii) A statement describing the ways in which effectiveness of training will be monitored by the project manager, including, but not limited to, examinations, critiques, and instructor evaluations.

(iv) A schedule for implementing the proposed training grant activities.

(v) A statement indicating that all members of the State or Tribal Emergency Response Commission were provided the opportunity to review the grant application.

[Amdt. 110–1, 57 FR 43067, Sept. 17, 1992, as amended by Amdt. 110–3, 59 FR 49132, Sept. 26, 1994]

§110.40 Activities eligible for funding.

(a) *Planning.* Eligible State applicants may receive funding for the following activities:

(1) Development, improvement, and implementation of emergency plans required under the Emergency Planning and Community Right-to-Know Act of 1986, as well as exercises which test the emergency plan. Enhancement of emergency plans to include hazard analysis as well as response procedures for emergencies involving transportation of hazardous materials, including radioactive materials.

(2) An assessment to determine flow patterns of hazardous materials within a State, between a State and another State or Indian country, and development and maintenance of a system to keep such information current.

(3) An assessment of the need for regional hazardous materials emergency response teams.

(4) An assessment of local response capabilities.

(5) Conduct of emergency response drills and exercises associated with emergency preparedness plans.

(6) Provision of technical staff to support the planning effort.

(7) Additional activities the Associate Administrator for Hazardous Materials Safety deems appropriate to implement the scope of work for the proposed project plan and approved in the grant.

(b) *Training.* Eligible State and Indian tribe applicants may receive funding for the following activities:

(1) An assessment to determine the number of public sector employees employed or used by a political subdivision who need the proposed training and to select courses consistent with the National Curriculum.

(2) Delivery of comprehensive preparedness and response training to public sector employees. Design and delivery of preparedness and response training to meet specialized needs. Financial assistance for trainees and for the trainers, if appropriate, such as tuition, travel expenses to and from a training facility, and room and board while at the training facility.

(3) Emergency response drills and exercises associated with training, a course of study, and tests and evaluation of emergency preparedness plans.

(4) Expenses associated with training by a person (including a department, agency, or instrumentality of a State or political subdivision thereof or an Indian tribe) and activities necessary to monitor such training including, but not limited to examinations, critiques and instructor evaluations.

(5) Provision of staff to manage the training effort designed to result in increased benefits, proficiency, and rapid deployment of local and regional responders.

(6) Additional activities the Associate Administrator for Hazardous Materials Safety deems appropriate to implement the scope of work for the proposed project and approved in the grant.

§110.50 Disbursement of Federal funds.

(a) Preaward expenditures may not be reimbursed.

(b) Reimbursement may not be made for a project plan unless approved in the grant award.

(c) If a recipient agency seeks additional funds, the amendment request will be evaluated on the basis of needs, performance and availability of funds. An existing grant is not a commitment of future Federal funding.

§ 110.60 Cost sharing for planning and training.

(a) The recipient agency must provide 20 percent of the direct and indirect costs of all activities covered under the grant award program with non-Federal funds. Recipients may either use cash (hard-match), in-kind (soft-match) contributions, or a combination of in-kind plus hard-match to meet this requirement. In-kind (soft-match) contributions are in addition to the maintenance of effort required of recipients of grant awards. The types of contributions allowed are as follows:

(1) Any funds from a State, local, or other non-Federal source used for an eligible activity as defined in § 110.40 in this part.

(2) The dollar equivalent value of an eligible activity as defined in § 110.40 of this part provided by a State, local, or other non-Federal source.

(3) The value of participants' salary while attending a planning or training activity contained in the approved grant application provided by a State, local, or other non-Federal source.

(4) Additional types of in-kind contributions the Associate Administrator for Hazardous Materials Safety deems appropriate.

(b) Funds used for matching purposes under any other Federal grant or cooperative agreement may not be used for matching purposes. The funds expended by a recipient agency to qualify for the grant may not be used for cost-sharing purposes.

(c) Acceptable contributions for matching and cost sharing purposes must conform to 49 CFR part 18.

[Amdt. 110–1, 57 FR 43067, Sept. 17, 1992, as amended by Amdt. 110–3, 59 FR 49132, Sept. 26, 1994]

§ 110.70 Financial administration.

(a) A State must expend and account for grant funds in accordance with State laws and procedures for expending and accounting for its own funds. Fiscal control and accounting procedures of the State, as well as its subgrantees and cost-type contractors, must be sufficient to:

(1) Permit the preparation of reports required by 49 CFR part 18 and this part, including the tracing of funds provided for planning to a level of expenditure adequate to establish that at least 75 percent of the funds provided were made available to LEPCs for developing, improving, and implementing emergency plans; and the tracing of funds provided for training to a level of expenditure adequate to establish that at least 75 percent of the funds provided were made available for the purposes of training public sector employees employed or used by political subdivisions.

(2) Permit the tracing of funds to a level of expenditure adequate to establish that such funds have not been used in violation of the restrictions and prohibitions of applicable statutes.

(b) The financial management systems of Indian tribes and any subgrantees must meet the standards of 49 CFR 18.20, including the ability to trace funds provided for training to a level of expenditure adequate to establish that at least 75 percent of the funds provided were made available for the purposes of training public sector employees employed or used by political subdivisions.

(c) Advances shall be made to States and Indian tribes consistent with 49 CFR part 18 and 31 CFR part 205. The Associate Administrator for Hazardous Materials Safety shall base these advances on demonstrated need, which will be determined on a case-by-case basis, considering such factors as State/Tribal budget constraints and reductions in amounts budgeted for hazardous materials activities. To obtain an advance, a State or Indian tribe must comply with the following requirements:

(1) A letter from the Governor or Tribal leader or their designee is required specifying the extenuating circumstances requiring the funding advance for the grant;

(2) The maximum advance request may not be more than $25,000 for each State or Indian tribe;

(3) Recipients of advance funding must obligate those funds within 3 months of receipt;

(4) Advances including interest will be deducted from the initial reimbursement to the State or Indian tribe; and

(5) The State or Indian tribe will have its allocation of current grant funds reduced and will not be permitted to apply for future grant funds until the advance is covered by a request for reimbursement. For example, if $25,000 is advanced for personnel costs, this advance would be deducted from the initial reimbursement in the year the advance was made.

(d) To be allowable, costs must be eligible, reasonable, necessary, and allocable to the approved project in accordance with OMB Circular A–87 and included in the grant award. Costs incurred prior to the award of any grant are not allowable. Recipient agencies are responsible for obtaining audits in accordance with the Single Audit Act of 1984 (31 U.S.C. 7501), 49 CFR part 90, and OMB Circular A–128. Audits shall be made by an independent auditor in accordance with generally accepted government auditing standards covering financial and compliance audits. The Associate Administrator for Hazardous Materials Safety may audit a recipient agency at any time.

§110.80 Procurement.

Project managers shall use procurement procedures and practices which reflect applicable State laws and regulations and Federal requirements as specified in 49 CFR 18.36.

§110.90 Grant monitoring, reports, and records retention.

(a) *Grant monitoring.* Project managers are responsible for managing the day-to-day operations of grant, subgrant and contract-supported activities. Project managers must monitor performance of supported activities to assure compliance with applicable Federal requirements and achievement of performance goals. Monitoring must cover each program, function, activity, or task covered by the grant. Monitoring and reporting requirements for planning and training are contained in this part; general grant reporting requirements are specified in 49 CFR 18.40.

(b) *Reports.* (1) The project manager shall submit a performance report at the completion of an activity for which reimbursement is being requested or with a request to amend the grant. The final performance report is due 90 days after the expiration or termination of the grant.

(2) Project managers shall submit an original and two copies of all performance reports. Performance reports for planning and training must include comparison of actual accomplishments to the stated goals and objectives established for the performance period, and the reasons for not achieving those goals and objectives, if applicable.

(3) Project managers shall report developments or events that occur between the required performance reporting dates which have significant impact upon the planning and training activity such as:

(i) Problems, delays, or adverse conditions which will impair the ability to meet the objective of the grant; and

(ii) Favorable developments which enable meeting time schedules and objectives sooner or at less cost than anticipated or producing more beneficial results than originally planned.

(4) Financial reporting, except as provided in §110.70 and 49 CFR 18.41, shall be supplied quarterly using Standard Form 270, Request for Advance or Reimbursement, to report the status of funds. The project manager shall report separately on planning and training.

(c) *Records retention.* In accordance with 49 CFR 18.42, all financial and programmatic records, supporting documents, statistical records, training materials, and other documents generated under a grant shall be maintained by the project manager for three years from the date the project manager submits the final financial status report (SF 269) or Request for Advance or Reimbursement (SF 270). The project manager shall designate a repository and single-point of contact for planning and for training, or both, for these purposes. If any litigation, claim, negotiation, audit or other action involving

the records has been started before the expiration of the 3-year period, the records must be retained until completion of the action and resolution of all issues which arise from it, or until the end of the regular 3-year period, whichever is later.

§ 110.100 Enforcement.

If a recipient agency fails to comply with any term of an award (whether stated in a Federal statute or regulation, an assurance, a State plan or application, a notice of award, or elsewhere) a noncompliance action may be taken as specified in 40 CFR 18.43. The recipient agency may appeal any such actions as specified in 49 CFR part 18. Costs incurred by the recipient agency during a suspension or after termination of an award are not allowable unless the Associate Administrator for Hazardous Materials Safety authorizes it in writing. Grant awards may be terminated in whole or in part with the consent of the recipient at any agreed upon effective date, or by the recipient upon written notification.

§ 110.110 After-grant requirements.

The Associate Administrator for Hazardous Materials Safety will close out the award upon determination that all applicable administrative actions and all required work of the grant are complete in accordance with subpart D of 49 CFR part 18. The project manager must submit all financial, performance, and other reports required as a condition of the grant, within 90 days after the expiration or termination of the grant. This time frame may be extended by the Associate Administrator for Hazardous Materials Safety for cause.

§ 110.120 Deviation from this part.

Recipient agencies may request a deviation from the non-statutory provisions of this part. The Associate Administrator for Hazardous Materials Safety will respond to such requests in writing. If appropriate, the decision will be included in the grant agreement. Request for deviations from part 110 must be submitted to: Grants Manager, Research and Special Programs Administration, U.S. Department of Transportation, 400 7th Street, SW., Washington, DC 20590–0001.

[Amdt. 110–1, 57 FR 43067, Sept. 17, 1992, as amended by Amdt. 110–3, 59 FR 49132, Sept. 26, 1994]

§ 110.130 Disputes.

Disputes should be resolved at the lowest level possible, beginning with the project manager and the project officer. If an agreement cannot be reached, the Administrator, RSPA, will serve as the dispute resolution official, whose decision will be final.

SUBCHAPTER B—OIL TRANSPORTATION

PART 130—OIL SPILL PREVENTION AND RESPONSE PLANS

Sec.
130.1 Purpose.
130.2 Scope.
130.3 General requirements.
130.5 Definitions.
130.11 Communication requirements.
130.21 Packaging requirements.
130.31 Response plans.
130.33 Response plan implementation.

AUTHORITY: 33 U.S.C. 1321.

SOURCE: Amdt. 130–2, 61 FR 30541, June 17, 1996, unless otherwise noted.

§ 130.1 Purpose.

This part prescribes prevention, containment and response planning requirements of the Department of Transportation applicable to transportation of oil by motor vehicles and rolling stock.

§ 130.2 Scope.

(a) The requirements of this part apply to—

(1) Any liquid petroleum oil in a packaging having a capacity of 3,500 gallons or more; and

(2) Any liquid petroleum or non-petroleum oil in a quantity greater than 42,000 gallons per packaging.

(b) The requirements of this part have no effect on—

(1) The applicability of the Hazardous Materials Regulations set forth in Subchapter C of this chapter; and

(2) The discharge notification requirements of the United States Coast Guard (33 CFR part 153) and EPA (40 CFR part 110).

(c) The requirements of this part do not apply to—

(1) Any mixture or solution in which oil is in a concentration by weight of less than 10 percent.

(2) Transportation of oil by aircraft or vessel.

(3) Any petroleum oil carried in a fuel tank for the purpose of supplying fuel for propulsion of the transport vehicle to which it is attached.

(4) Oil transport exclusively within the confines of a non-transportation-related or terminal facility in a vehicle not intended for use in interstate or intrastate commerce (see 40 CFR part 112, appendix A).

(d) The requirements in § 130.31(b) of this part do not apply to mobile marine transportation-related facilities (see 33 CFR part 154).

§ 130.3 General requirements.

No person may offer or accept for transportation or transport oil subject to this part unless that person—

(a) Complies with this part; and

(b) Has been instructed on the applicable requirements of this part.

§ 130.5 Definitions.

In this subchapter: *Animal fat* means a non-petroleum oil, fat, or grease derived from animals, not specifically identified elsewhere in this part.

Contract or other means is:

(1) A written contract with a response contractor identifying and ensuring the availability of the necessary personnel or equipment within the shortest practicable time;

(2) A written certification by the owner or operator that the necessary personnel or equipment can and will be made available by the owner or operator within the shortest practicable time; or

(3) Documentation of membership in an oil spill response organization that ensures the owner's or operator's access to the necessary personnel or equipment within the shortest practicable time.

EPA means the U.S. Environmental Protection Agency.

Liquid means a material that has a vertical flow of over two inches (50 mm) within a three-minute period, or a material having one gram or more liquid separation, when determined in accordance with the procedures specified in ASTM D 4359–84, ''Standard Test Method for Determining Whether a Material is a Liquid or a Solid,'' 1990 edition, which is incorporated by reference.

NOTE: This incorporation by reference has been approved by the Director of the Federal Register in accordance with 5 U.S.C. 552(a) and 1 CFR part 51. A copy may be obtained

from the American Society for Testing and Materials, 1916 Race Street, Philadelphia, PA 19103. Copies may be inspected at the Dockets Unit, Room 8421, DOT headquarters building, 400 7th St. SW, Washington, DC 20590 or at the Office of the Federal Register, 800 North Capitol St. NW, Room 700, Washington, DC.

Maximum extent practicable means the limits of available technology and the practical and technical limits on an owner or operator of an onshore facility in planning the response resources required to provide the on-water recovery capability and the shoreline protection and cleanup capability to conduct response activities for a worst-case discharge of oil in adverse weather.

Non-petroleum oil means any animal fat, vegetable oil or other non-petroleum oil.

Oil means oil of any kind or in any form, including, but not limited to, petroleum, fuel oil, sludge, oil refuse, and oil mixed with wastes other than dredged spoil.

NOTE: This definition does not include hazardous substances (see 40 CFR part 116).

Other non-petroleum oil means a non-petroleum oil of any kind that is not an animal fat or vegetable oil.

Packaging means a receptacle and any other components or materials necessary for the receptacle to perform its containment function in conformance with the packaging requirements of this part. A compartmented tank is a single packaging.

Person means an individual, firm, corporation, partnership, association, State, municipality, commission, or political subdivision of a State, or any interstate body, as well as a department, agency, or instrumentality of the executive, legislative or judicial branch of the Federal Government.

Petroleum oil means any oil extracted or derived from geological hydrocarbon deposits, including fractions thereof.

Qualified individual means an individual familiar with the response plan, trained in his or her responsibilities in implementing the plan, and authorized, on behalf of the owner or operator, to initiate all response activities identified in the plan, to enter into response-related contracts and obligate funds for such contracts, and to act as a liaison with the on-scene coordinator and other responsible officials. The qualified individual must be available at all times the owner or operator is engaged in transportation subject to part 130 (alone or in conjunction with an equally qualified alternate), must be fluent in English, and must have in his or her possession documentation of the required authority.

Transports or Transportation means any movement of oil by highway or rail, and any loading, unloading, or storage incidental thereto.

Vegetable oil means a non-petroleum oil or fat derived from plant seeds, nuts, kernels or fruits, not specifically identified elsewhere in this part.

Worst-case discharge means ''the largest foreseeable discharge in adverse weather conditions,'' as defined at 33 U.S.C. 1321(a)(24). The largest foreseeable discharge from a motor vehicle or rail car is the capacity of the cargo container. The term ''maximum potential discharge,'' used in § 130.31(a), is synonymous with ''worst-case discharge.''

§ 130.11 Communication requirements.

(a) No person may offer oil subject to this part for transportation unless that person provides the person accepting the oil for transportation a document indicating the shipment contains oil.

(b) No person may transport oil subject to this part unless a readily available document indicating that the shipment contains oil is in the possession of the transport vehicle operator during transportation.

(c) A material subject to the requirements of this part need not be specifically identified as oil when the shipment document accurately describes the material as: aviation fuel, diesel fuel, fuel oil, gasoline, jet fuel, kerosene, motor fuel, or petroleum.

§ 130.21 Packaging requirements.

Each packaging used for the transportation of oil subject to this part must be designed, constructed, maintained, closed, and loaded so that, under conditions normally incident to transportation, there will be no release of oil to the environment.

§130.31 Response plans.

(a) After September 30, 1993, no person may transport oil subject to this part unless that person has a current basic written plan that:

(1) Sets forth the manner of response to discharges that may occur during transportation;

(2) Takes into account the maximum potential discharge of the contents from the packaging;

(3) Identifies private personnel and equipment available to respond to a discharge;

(4) Identifies the appropriate persons and agencies (including their telephone numbers) to be contacted in regard to such a discharge and its handling, including the National Response Center; and

(5) For each motor carrier, is retained on file at that person's principal place of business and at each location where dispatching of motor vehicles occurs; and for each railroad, is retained on file at that person's principal place of business and at the dispatcher's office.

(b) After February 18, 1993, no person may transport an oil subject to this part in a quantity greater than 1,000 barrels (42,000 gallons) unless that person has a current comprehensive written plan that:

(1) Conforms with all requirements specified in paragraph (a) of this section;

(2) Is consistent with the requirements of the National Contingency Plan (40 CFR part 300) and Area Contingency Plans;

(3) Identifies the qualified individual having full authority to implement removal actions, and requires immediate communications between that individual and the appropriate Federal official and the persons providing spill response personnel and equipment;

(4) Identifies, and ensures by contract or other means the availability of, private personnel (including address and phone number), and the equipment necessary to remove, to the maximum extent practicable, a worst case discharge (including a discharge resulting from fire or explosion) and to mitigate or prevent a substantial threat of such a discharge;

(5) Describes the training, equipment testing, periodic unannounced drills, and response actions of facility personnel, to be carried out under the plan to ensure the safety of the facility and to mitigate or prevent the discharge, or the substantial threat of such a discharge; and

(6) Is submitted, and resubmitted in the event of any significant change, to the Federal Railroad Administrator (for tank cars), or to the Federal Highway Administrator (for cargo tanks) at 400 Seventh Street SW, Washington, DC 20590–0001.

(Approved by the Office of Management and Budget under control number 2137–0591)

§130.33 Response plan implementation.

If, during transportation of oil subject to this part, a discharge occurs—into or on the navigable waters of the United States; on the adjoining shorelines to the navigable waters; or that may affect natural resources belonging to, appertaining to, or under the exclusive management authority of, the United States—the person transporting the oil shall implement the plan required by §130.31, in a manner consistent with the National Contingency Plan, 40 CFR part 300, or as otherwise directed by the Federal on-scene coordinator.

SUBCHAPTER C—HAZARDOUS MATERIALS REGULATIONS

PART 171—GENERAL INFORMATION, REGULATIONS, AND DEFINITIONS

Sec.
171.1 Purpose and scope.
171.2 General requirements.
171.3 Hazardous waste.
171.4 Marine pollutants.
171.6 Control numbers under the Paperwork Reduction Act.
171.5 Temporary regulation; liquefied compressed gases in cargo tank motor vehicles.
171.7 Reference material.
171.8 Definitions and abbreviations.
171.9 Rules of construction.
171.10 Units of measure.
171.11 Use of ICAO Technical Instructions.
171.12 Import and export shipments.
171.12a Canadian shipments and packagings.
171.14 Transitional provisions for implementing requirements based on the UN Recommendations.
171.14 Transitional provisions for implementing certain requirements. (effective 10-01-98)
171.15 Immediate notice of certain hazardous materials incidents.
171.16 Detailed hazardous materials incident reports.
171.17 [Reserved]
171.18 Continuation of effectiveness of existing Bureau of Explosives registrations.
171.19 Approvals or authorizations issued by the Bureau of Explosives.
171.20 Submission of Examination Reports.
171.21 Assistance in investigations and special studies.

AUTHORITY: 49 U.S.C. 5101–5127; 49 CFR 1.53.

§ 171.1 Purpose and scope.

(a) This subchapter prescribes requirements of the Department of Transportation governing—

(1) The offering of hazardous materials for transportation and transportation of hazardous materials in interstate, intrastate, and foreign commerce by rail car, aircraft, motor vehicle, and vessel (except as delegated at § 1.46(t) of this title), (except that until October 1, 1998, this subchapter applies to intrastate carriers by motor vehicle only in so far as this subchapter relates to hazardous waste, hazardous substances, flammable cryogenic liquids in portable tanks and cargo tanks, and marine pollutants).

(2) The representation that a hazardous material is present in a package, container, rail car, aircraft, motor vehicle, or vessel.

(3) The manufacture, fabrication, marking, maintenance, reconditioning, repairing, or testing of a packaging or container which is represented, marked, certified, or sold for use in transportation of hazardous materials.

(4) The use of terms and symbols prescribed in this subchapter for the marking, labeling, placarding and description of hazardous materials and packagings used in their transport.

(b) Any person who, under contract with any department, agency, or instrumentality of the executive, legislative, or judicial branch of the Federal Government, transports, or causes to be transported or shipped, a hazardous material or manufactures, fabricates, marks, maintains, reconditions, repairs, or tests a package or container which is represented, marked, certified, or sold by such person as qualified for use in the transportation of a hazardous material shall be subject to and comply with all provisions of the Federal hazardous materials transportation law, all orders and regulations issued thereunder, and all other substantive and procedural requirements of Federal, State, and local governments and Indian tribes (except any such requirements that have been preempted by the Federal hazardous materials transportation law or any other Federal law), in the same manner and to the same extent as any person engaged in such activities that are in or affect commerce is subject to such provisions, orders, regulations, and requirements.

(c) Any person who knowingly violates a requirement of the Federal hazardous material transportation law, an order issued thereunder, subchapter A, an exemption issued under subchapter A, of this subchapter, is liable for a civil penalty of not more than $25,000 ($27,500 for a violation that occurs after January 21, 1997) and not less than $250 for each violation. When the violation is a continuing one and involves the transporting of hazardous materials or

the causing of them to be transported or shipped, each day of the violation constitutes a separate offense. Any person who knowingly violates §171.2(g) of this subchapter or willfully violates a provision of the Federal hazardous material transportation law or an order or regulation issued thereunder shall be fined under Title 18, United States Code, or imprisoned for not more than 5 years, or both.

[Amdt. 171–150, 62 FR 1215, Jan. 8, 1997, as amended by Amdt. 171–152, 62 FR 2977, Jan. 21, 1997; Amdt. 171–154, 62 FR 49566, Sept. 22, 1997]

§171.2 General requirements.

(a) No person may offer or accept a hazardous material for transportation in commerce unless that person is registered in conformance with subpart G of part 107 of this chapter, if applicable, and the hazardous material is properly classed, described, packaged, marked, labeled, and in condition for shipment as required or authorized by applicable requirements of this subchapter, or an exemption, approval or registration issued under this subchapter or subchapter A of this chapter.

(b) No person may transport a hazardous material in commerce unless that person is registered in conformance with subpart G of part 107 of this chapter, if applicable, and the hazardous material is handled and transported in accordance with applicable requirements of this subchapter, or an exemption, approval or registration issued under this subchapter or subchapter A of this chapter.

(c) No person may represent, mark, certify, sell, or offer a packaging or container as meeting the requirements of this subchapter or an exemption, approval or registration issued under this subchapter or subchapter A of this chapter, governing its use in the transportation in commerce of a hazardous material, whether or not it is used or intended to be used for the transportation of a hazardous material, unless the packaging or container is manufactured, fabricated, marked, maintained, reconditioned, repaired and retested, as appropriate, in accordance with applicable requirements of this subchapter, or an exemption, approval or registration issued under this subchapter or subchapter A of this chapter.

(d) The representations, markings, and certifications subject to the prohibitions of paragraph (c) of this section include, but are not limited to—

(1) Specification identifications that include the letters ''ICC,'' ''DOT,'' ''MC,'' or ''UN'';

(2) Exemption, approval, and registration numbers that include the letters ''DOT,'' ''EX,'' ''M,'' or ''R''; and

(3) Test dates associated with specification, registration, approval, retest or exemption markings indicating compliance with a test or retest requirement of this subchapter, or an exemption, an approval or a registration issued under this subchapter or subchapter A of this chapter.

(e) When a person performs a function covered by or having an effect on a specification prescribed in part 178, 179 or 180 of this subchapter, an approval issued under this subchapter, or an exemption issued under subpart B of this chapter, that person must perform the function in accordance with that specification, approval, or exemption, as appropriate.

(f) No person shall, by marking or otherwise, represent that—

(1) A container or package for the transportation of hazardous materials is safe, certified, or in compliance with the requirements of this title unless it meets the requirements of all applicable regulations issued under the Federal hazardous material transportation law; or

(2) A hazardous material is present in a package, container, motor vehicle, rail car, aircraft, or vessel, if the hazardous material is not present.

(g) No person shall unlawfully alter, remove, deface, destroy, or otherwise tamper with—

(1) Any marking, label, placard, or description on a document required by the Federal hazardous material transportation law, or the regulations issued thereunder; or

(2) Any package, container, motor vehicle, rail car, aircraft, or vessel used for the transportation of hazardous materials.

(h) No person shall—

(1) Falsify or alter an exemption, approval, registration or other grant of

authority issued under this subchapter or subchapter A of this chapter; or

(2) Offer a hazardous material for transportation or transport a hazardous material in commerce, or represent, mark, certify, or sell a packaging or container, under a false or altered exemption, approval, registration or other grant of authority issued under this subchapter or subchapter A of this chapter.

[Amdt. 171–70, 48 FR 2655, Jan. 20, 1983, as amended by Amdt. No. 171–100, 54 FR 25004, June 12, 1989; Amdt. 171–12, 56 FR 8624, Feb. 28, 1991; Amdt. No. 171–115, 57 FR 30631, July 9, 1992; 57 FR 37902, Aug. 21, 1992; Amdt. No. 171–120, 58 FR 33305, June 16, 1993; Amdt. 171–2, 59 FR 49132, Sept. 26, 1994; Amdt. 171–141, 61 FR 21101, May 9, 1996]

§ 171.3 Hazardous waste.

(a) No person may offer for transportation or transport a hazardous waste (as defined in § 171.8 of this subchapter) in interstate or intrastate commerce except in accordance with the requirements of this subchapter.

(b) No person may accept for transportation, transport, or deliver a hazardous waste for which a manifest is required unless that person:

(1) Has marked each motor vehicle used to transport hazardous waste in accordance with § 390.21 or § 1058.2 of this title even though placards may not be required;

(2) Complies with the requirements for manifests set forth in § 172.205 of this subchapter; and

(3) Delivers, as designated on the manifest by the generator, the entire quantity of the waste received from the generator or a transporter to:

(i) The designated facility or, if not possible, to the designated alternate facility;

(ii) The designated subsequent carrier; or

(iii) A designated place outside the United States.

NOTE: Federal law specifies penalties up to $250,000 fine for an individual and $500,000 for a company and 5 years imprisonment for the willful discharge of hazardous waste at other than designated facilities. 49 U.S.C. 5124.

(c) If a discharge of hazardous waste or other hazardous material occurs during transportation, and an official of a State or local government or a Federal agency, acting within the scope of his official responsibilities, determines that immediate removal of the waste is necessary to prevent further consequence, that official may authorize the removal of the waste without the preparation of a manifest. [NOTE: In such cases, EPA does not require carriers to have EPA identification numbers.]

NOTE 1: EPA requires shippers (generators) and carriers (transporters) of hazardous wastes to have identification numbers which must be displayed on hazardous waste manifests. See 40 CFR parts 262 and 263. (Identification number application forms may be obtained from EPA regional offices.)

NOTE 2: In 40 CFR part 263, the EPA sets forth requirements for the cleanup of releases of hazardous wastes.

[Amdt. 171–53, 45 FR 34586, May 22, 1980, as amended by Amdt. 171–53, 45 FR 74648, Nov. 10, 1980; Amdt. 171–78, 49 FR 10510, Mar. 20, 1984; Amdt. 171–107, 54 FR 40068, Sept. 29, 1989; Amdt. 171–111, 55 FR 52466, Dec. 21, 1990; 56 FR 66157, Dec. 20, 1991; Amdt. 171–2, 59 FR 49132, Sept. 26, 1994; Amdt. 171–141, 61 FR 21102, May 9, 1996]

§ 171.4 Marine pollutants.

(a) Except as provided in paragraph (c) of this section, no person may offer for transportation or transport a marine pollutant, as defined in § 171.8, in intrastate or interstate commerce except in accordance with the requirements of this subchapter.

(b) The requirements of this subchapter for the transportation of marine pollutants are based on the provisions of Annex III of the 1973 International Convention for Prevention of Pollution from Ships, as modified by the Protocol of 1978 (MARPOL 73/78).

(c) *Exceptions.* Except when transported aboard vessel, the requirements of this subchapter specific to marine pollutants do not apply to non-bulk packagings transported by motor vehicles, rail cars or aircraft.

[Amdt. 171–116, 57 FR 52934, Nov. 5, 1993, as amended by Amdt. 107–39, 61 FR 51337, Oct. 1, 1996]

§ 171.5 Temporary regulation; liquefied compressed gases in cargo tank motor vehicles.

(a) *Operation of new and existing cargo tank motor vehicles.* For a cargo tank

motor vehicle used to transport liquefied compressed gases, other than carbon dioxide, § 178.337–11(a)(1)(i) of this subchapter requires that each internal self-closing stop valve and excess flow valve must automatically close if any of its attachments are sheared off or if any attached hoses or piping are ruptured or separated. Other regulations in Parts 173 and 180 of this subchapter reference this requirement or similar requirements in effect at the time of manufacture of a cargo tank motor vehicle. Notwithstanding this requirement, a DOT MC 330 or MC 331 specification cargo tank motor vehicle, or a non-specification cargo tank motor vehicle conforming to the requirements of § 173.315(k) of this subchapter, may, without certification and demonstrated performance of the internal self-closing stop valve or the excess flow feature or self-closing stop valve of its emergency discharge control system, be represented for use and used to transport certain liquefied compressed gases under the following conditions:

(1) *Use.* The cargo tank motor vehicle must otherwise be operated, unloaded and attended in full conformance with all applicable requirements of this subchapter and the following additional requirements:

(i) Before initiating each transfer from the cargo tank motor vehicle, the person performing the function shall verify that each component of the discharge system is of sound quality, is free of leaks, and that connections are secure. In addition, prior to commencing the first transfer of each day, the transfer hose shall be subjected to full transfer pressure.

(ii) Prior to commencing transfer using a new or repaired transfer hose or a modified hose assembly for the first time, the hose assembly must be subjected to a pressure test. The pressure test must be performed at no less than 120 percent of the design pressure or maximum allowable working pressure (MAWP) marked on the cargo tank motor vehicle, or the pressure the hose is expected to be subjected to during product transfer, whichever is greater. This test must include all hose and hose fittings and equipment arranged in the configuration to be employed during transfer operations. A hose or associated equipment that shows signs of leakage, significant bulging, or other defects, may not be used. Where hoses are used to transfer liquefied compressed gases, a procedure must be instituted to ensure that hose assemblies are maintained at a level of integrity suited to each hazardous material. An acceptable procedure for maintenance, testing and inspection of hoses is outlined in publication RMA/IP–11–2, ''Manual for Maintenance, Testing and Inspection of Hose'', 1989 edition, published by the Rubber Manufacturers Association, 1400 K Street, N.W., Washington, DC 20005.

(iii) If there is an unintentional release of lading to the environment during transfer, the internal self-closing stop valve shall be promptly activated, and the qualified person unloading the cargo tank motor vehicle shall promptly shut down all motive and auxiliary power equipment. Prompt activation of the internal self-closing stop valve may be accomplished through:

(A) Compliance with § 178.337–11(a)(1)(i) of this subchapter; or

(B) A qualified person positioned within arm's reach of the mechanical means of closure for the internal self-closing stop valve throughout the unloading operation; except, that person may be away from the mechanical means only for the short duration necessary to engage or disengage the motor vehicle power take-off or other mechanical, electrical, or hydraulic means used to energize the pump and other components of the cargo tank motor vehicle's discharge system; or

(C) A fully operational remote-controlled system capable of stopping the transfer of lading by operation of a transmitter carried by a qualified person attending unloading of the cargo tank motor vehicle. Where the means for closure of the internal self-closing stop valve includes a remote-controlled system, the attendance requirements of § 177.834(i)(3) of this subchapter are satisfied when a qualified person:

(*1*) Is carrying a radio transmitter that can activate the closure of the internal self-closing stop valve;

(*2*) Remains within the operating range of the transmitter; and

(*3*) Has an unobstructed view of the cargo tank motor vehicle at all times that the internal stop-valve is open.

(iv) A cargo tank motor vehicle that has an emergency discharge system conforming to the requirements in § 178.337–11(a)(1)(i) of this subchapter may be operated under the provisions of this paragraph (a)(1).

(v) A comprehensive written emergency operating procedure must be developed for all transfer operations and hazmat employees who perform unloading functions must be trained in its provisions. The emergency operating procedure must be prominently displayed in or on the cargo tank motor vehicle.

(vi) As required by § 172.704 of this subchapter, each manufacturer, assembler, retester, motor carrier and other hazmat employer subject to the requirements of this section shall ensure that its hazmat employees are trained to properly perform these new function-specific requirements including the meaning of the marking specified in paragraph (b) of this section. The hazmat employer shall ensure that a record of the training is created, certified, and maintained as specified in § 172.704(d) of this subchapter.

(2) *Continuing qualification.* An existing in-service cargo tank motor vehicle may continue to be marked and documented as required by Part 180 of this subchapter if the following statement is added to the Certificate of Compliance by the owner or operating motor carrier: ''Emergency excess flow control performance not established for this unit.''

(3) *New cargo tank motor vehicles.* A new (unused) cargo tank motor vehicle manufactured, marked and certified prior to March 1, 1999, may be marked and certified as conforming to specification MC 331 if it otherwise meets all requirements of the specification and the following statement is added to the certification document required by § 178.337–18 of this subchapter: ''Emergency excess flow control performance not established for this unit.''

(b) *Marking.* The following marking must be displayed on a cargo tank motor vehicle used or represented for use under this section:

(1) The letters must be white and the background black.

(2) The letters must be at least 1.5cm in height.

(3) The marking must be 6cm×15cm.

(c) Requirements of this section are applicable to a cargo tank motor vehicle used to transport liquefied compressed gases, other than carbon dioxide, from August 16, 1997 through March 1, 1999.

[62 FR 44048, Aug. 18, 1997]

§ 171.6 Control numbers under the Paperwork Reduction Act.

(a) *Purpose and scope.* This section collects and displays the control numbers assigned to the HMR collections of

information by the Office of Management and Budget (OMB) under the Paperwork Reduction Act of 1995. This section complies with the requirements of 5 CFR 1320.7(f), 1320.12, 1320.13 and 1320.14 (OMB regulations implementing the Paperwork Reduction Act of 1995) for the display of control numbers assigned by OMB to collections of information of the HMR.

(b) *OMB control numbers.* The table in paragraph (b)(2) of this section sets forth the control numbers assigned to collection of information in the HMR by the Office of Management and Budget (OMB) under the Paperwork Reduction Act of 1995.

(1) Column 1 lists the OMB control number assigned to the HMR collections of information. Column 2 contains the Report Title of the approved collection of information. Column 3 lists the part(s) or section(s) in 49 CFR identified or described in the collection of information.

(2) Table.

Current OMB control No.	Title	Title 49 CFR part or section where identified and described
2137–0014	Cargo Tank Specification Requirements.	§§ 107.503, 107.504, 178.320, 178.337, 178.338, 178.345, 178.346, 178.347, 178.348, 180.409, 180.417.
2137–0018	Inspection and Testing of Portable Tank and IBC's.	§§ 173.24, 173.32, 173.32a, 173.32b, 173.32 (b)(e), 173.32c, 178.3, 178.270, 178.271, 178.272, 178.245, 178.255, 178.245–1 (a), 178.255–1, 178.245–6, 178.702, 178.801, 178.810, 180.352, 178.813, 178.703.
2137–0022	Recordkeeping and information Collection for Cylinders.	§§ 173.34, 173.302(e), 173.303(d).
2137–0034	Hazardous Materials Shipping Papers.	Part 172, §§ 173.7(a)(1), 173.22(a)(1), 173.56 (b)(1), (d)(1), (e)(2), 173.150(f)(3)(i), 174.24, 174.26(b) 174.114, 175.30, 175.35, 175.703, 176.9, 176.24, 176.27, 176.30, 176.31, 176.36, 176.89, 176.90, 176.95, 177.817.
2137–0039	Hazardous Materials Incident Report.	§§ 171.15, 171.16.
2137–0051	Rulemaking and Exemption Petitions.	Part 107, Subpart B, §§ 106. 31, 106.33, 107.3, 107.5, 107.7, 107.103, 107.105, 107.107, 107.109, 107.113, 107.117, 107.121, 107.123, 107.125, 107.201, 107.202, 107.203, 107.205, 107.209, 107.211, 107.215, 107.217, 107.219, 107.221, 107.223.
2137–0510	RAM Transportation Requirements.	§§ 173.22(c), (d), 173.411, 173.415(a), 173.416(b), 173.417(a)(5), (b)(3), (4), 173.457(b), 173.471 (a), (d), (f), 173.472, 173.473 (a), (d), 173.476 (a), (b), (e), 173.477, 173.478(a).
2137–0542	Cryogenic Liquids Requirements.	§§ 173.33(d)(1)(ii), 177.816, 177.840.

Current OMB control No.	Title	Title 49 CFR part or section where identified and described
2137–0557	Approvals for Hazardous Materials.	§§ 107.401, 107.402, 107.403, 107.404, 107.405, 172.101(l)(2), 172.102(c)(B69), 173.2a(c)(4), 173.4(a)(11), 173.7(a)(1), 173.21(f)(3) (h)(2)(i), 173.24(e)(3)(iii), 173.51(a), (b), 173.56(a)(2), (b)(1), (2), (4), (c), (f), (g), (i), (j)(3), 173.124(a)(1) (iii)(B), (a)(2)(iii)(D), 173.128(d), 173.159(f), 173.166, 173.171(a), (c), 173.185(d)(9), (ii), (iii), i, 173.214, 173.224(d) 173.225(b)(4), (c), 173.245(a)(b), 173.300a, 173.300b, 173.305(c)(1), 173.315(i)(12), 173.334(d), 173.340(a), (b), (c)(4), 176.340(c), 177.806(a)(1), 178.36–3, 178.37–3, 178.38–3, 178.39–3, 178.42–3, 178.44–3, 178.45–3, 178.46–3, 178.50–3, 178.51–3, 178.53–3, 178.55–3, 178.56–3, 178.57–3, 178.58–3, 178.59–3, 178.60–3, 178.61–3(a), 178.65–3, 178.68–3, 178.270–3(f), 178.270–13(d), 178.601(e)(g)(7), (h), (k), 178.603(b), 178.604(b)2), 178.605(b), 178.606(b), (c), 178.608(b)(5), 178.801(e)(2), (h), (i), 178.813(c).
2137–0559	Rail Carriers and Tank Car Tank Requirements.	§§ 173.10(b)(1), 173.31(a)(2), 173.247(a), 173.31(b)(6)(ii) 174.9, 174.20(b), 174.50, 174.61, 172.102: *SP*: B–45, B–46, B–55, B–61, B–69, B–77, B–78, B–81, 174.63(d), §§ 174.81, Table Note b, 174.104(c), (e), (f), 174.114, 174.204(a)(1), 179.3, 179.5 179.7(b)(2), (5)(d), 179.22, 180.505, 180.509, 180.515, 180.517(a)(b), 180.519(d).
2137–0572	Testing Requirements for Packaging.	§§ 178.2(c), 178.601(1).
2137–0575	Bulk Packaging Marking Requirements.	§§ 172.302, 172.332, 172.336.
2137–0582	Container Certification Statement.	§§ 176.172, 176.27(c).
2137–0586	Hazardous Materials Public Sector Training and Planning Grants.	Part 110
2137–0595	Cargo Tank Motor Vehicles in Liquefied Compressed Gas Service.	§§ 178.337–11(a)(1)(i).

[Amdt. 171–111, 56 FR 66157, Dec. 20, 1991, as amended at 57 FR 1877, Jan. 16, 1992; Amdt. 171–121, 58 FR 51527, Oct. 1, 1993; Amdt. 171–137, 61 FR 33254, June 26, 1996; 62 FR 51558, Oct. 1, 1997]

§ 171.7 Reference material.

(a) *Matter incorporated by reference*—(1) *General.* There is incorporated, by reference in parts 170–189 of this subchapter, matter referred to that is not specifically set forth. This matter is hereby made a part of the regulations in parts 170–189 of this subchapter. The matter subject to change is incorporated only as it is in effect on the date of issuance of the regulation referring to that matter. The material listed in paragraph (a)(3) has been approved for incorporation by reference by the Director of the Federal Register. Material is incorporated as it exists on the date of the approval and a notice of any change in the material

will be published in the FEDERAL REGISTER. Matters referenced by footnote are included as part of the regulations of this subchapter.

(2) *Accessibility of materials.* All incorporated matter is available for inspection at:

(i) The Dockets Branch, room 8419, NASSIF Building, 400 7th Street, SW., Washington, DC 20590; and

(ii) The Office of the Federal Register, 800 North Capitol Street, NW., suite 700, Washington, DC.

(3) *Table of material incorporated by reference.* The following Table sets forth material incorporated by reference. The first column lists the name and address of the organization from which the material is available and the name of the material. The second column lists the section(s) of this subchapter, other than § 171.7, in which the matter is referenced. The second column is presented for information only and may not be all inclusive.

Source and name of material	49 CFR reference
The Aluminum Association, 420 Lexington Avenue, New York, NY 10017	
Aluminum Standards and Data, Seventh Edition, June 1982	172.102; 178..46 and 178.65
American National Standards Institute, Inc., 1430 Broadway, New York, NY 10018	
ANSI/ASHRAE 15–94, Safety Code for Mechanical Refrigeration	173.306
ANSI B16.5–77, Steel Pipe Flanges, Flanged Fittings	178.345; 178.360
ANSI N14.1 Standard for Packaging of Uranium Hexafluoride for Transport, 1971, 1982, 1987 and 1990 Editions.	173.417; 173.420
American Pyrotechnics Association (APA), P.O. Box 213, Chestertown, MD 21620	
APA Standard 87–1, Standard for Construction and Approval for Transportation of Fireworks and Novelties, April 1993 Edition.	173.56
American Society of Mechanical Engineers, United Engineering Center, 354 47th Street, New York, NY 10017	
ASME Code, Sections II (Parts A and B), V, VIII (Division 1), and IX of 1992 Edition of American Society of Mechanical Engineers Boiler and Pressure Vessel Code and Addenda through December 31, 1993.	173.32; 173.306; 173.315; 173.318; 173.420; 178.245; 178.255; 178.270; 178.271; 178.272; 178.337; 178.338; 178.345; 178.346; 178.347; 178.348; 179.400; 180.407; 180.417
ASME Code, Section V (FR Nondestructive Examination), 1977	180.407
ASME Code, Section IX (FR Welding and Brazing Qualification), 1977 and Addendum (1979)	178.245; 178.270; 178.337; 178.338
American Society for Testing and Materials, 100 Barr Harbor Drive, West Conshohocken, PA 19428	
Noncurrent ASTM Standards are available from: Engineering Societies Library, 354 E. 47th Street, New York, NY 10017	
ASTM A 20/A 20M–93a Standard Specification for General Requirements for Steel Plates for Pressure Vessels.	178.337–2; 179.102–4; 179.102–17.
ASTM A 47–68 Malleable Iron Castings	179.200
ASTM A 240/A 240M–94b Standard Specification for Heat-Resisting Chromium and Chromium-Nickel Stainless Steel Plate, Sheet and Strip for Pressure Vessels.	178.57; 178.358–5; 179.100–7; 179.100–10; 179.102–1; 179.102–4; 179.102–17; 179.200–7; 179.201–5; 179.220–7; 179.400–5.
ASTM A 242–81 Standard Specification for High-Strength Low-Alloy Structural Steel	179.100
ASTM A 262–93a Standard Practices for Detecting Susceptibility to Intergranular Attack in Austenitic Stainless Steels.	179.100–7; 179.200–7; 179.201–4.
ASTM A 300–58 Steel Plates for Pressure Vessels for Service at Low Temperatures	178.337
ASTM A 302/A 302M–93 Standard Specification for Pressure Vessel Plates, Alloy Steel, Manganese-Molybdenum and Manganese-Molybdenum Nickel.	179.100–7; 179.200–7; 179.220–7.
ASTM A 333–67 Seamless and Welded Steel Pipe for Low-Temperature Service	178.45

Source and name of material	49 CFR reference
ASTM A 366/A 366M–91 (1993)e1 Standard Specification for Steel, Sheet, Carbon, Cold-Rolled, Commercial Quality.	178.601
ASTM A 370–94 Standard Test Methods and Definitions for Mechanical Testing of Steel Products	179.102–1; 179.102–4; 179.102–17.
ASTM A 388–67 Ultrasonic Testing and Inspection of Heavy Steel Forging	178.45
ASTM A 441–81 Standard Specification for High-Strength Low-Alloy Structural Manganese Vanadium Steel.	178.338
ASTM A 514–81 Standard Specification for High-Yield Strength Quenched and Tempered Alloy Steel Plate, Suitable for Welding.	178.338
ASTM A 516/A 516M–90 Standard Specification for Pressure Vessel Plates, Carbon Steel, for Moderate and Lower- Temperature Service.	178.337–2; 179.100–7; 179.100–20; 179.102–1; 179.102–2; 179.102–4; 179.102–17; 179.200–7; 179.220–7.
ASTM A 537/A 537M–91 Standard Specification for Pressure Vessel Plates, Heat-Treated, Carbon-Manganese-Silicon Steel.	179.100–7; 179.102–4; 179.102–17.
ASTM A 568/A 568M–95 Standard Specification for Steel, Sheet, Carbon, and High-Strength, Low-Alloy, Hot-Rolled and Cold-Rolled, General Requirements for.	178.601
ASTM A 572–82 Standard Specification for High-Strength Low-Alloy Columbian-Vanadium Steels of Structural Quality.	178.338; 179.100
ASTM A 588–81 Standard Specification for High-Strength Low-Alloy Structural Steel with 50 Ksi Minimum Yield Point to 4 in. Thick.	179.100; 178.338
ASTM A 606–75 Standard Specification for Steel Sheet and Strip Hot-Rolled and Cold-Rolled, High-Strength, Low-Alloy, with Improved Atmospheric Corrosion Resistance, 1975 (Reapproved 1981).	178.338
ASTM A 612–72a High Strength Steel Plates for Pressure Vessels for Moderate and Lower Temperature Service.	178.337
ASTM A 633–79a Standard Specification for Normalized High-Strength Low-Alloy Structural Steel, 1979 Edition.	178.338
ASTM A 715–81 Standard Specification for Steel Sheet and Strip, Hot-Rolled, High-Strength, Low-Alloy with Improved Formability, 1981.	178.338
ASTM B 90–69 Magnesium Alloy Sheet and Plate	178.251
ASTM B 162–93a Standard Specification for Nickel Plate, Sheet, and Strip	179.200–7.
ASTM B 209–93 Standard Specification for Aluminum and Aluminum-Alloy Sheet and Plate	179.100–7; 179.200–7; 179.220–7.
ASTM B 557–84 Tension Testing Wrought and Cast Aluminum and Magnesium-Alloy Products	178.46; 178.251.
ASTM B 580–79 Standard Specification for Anodie Oxide Coatings on Aluminum, 1979	173.316; 173.318
ASTM D 56–93 Standard Test Method for Flash Point by Tag Closed Tester	173.120
ASTM D 93–94 Standard Test Methods for Flash Point by Pensky-Martens Closed Tester	173.120
ASTM D 445–88 Kinematic Viscosity of Transparent and Opaque Liquids (and the Calculation of Dynamic Viscosity).	171.8
ASTM D 1200–88 Viscosity by Ford Viscosity Cup	171.8
ASTM D 1838–64 Copper Strip Corrosion by Liquefied Petroleum (LP) Gases	173.315
ASTM D 3278–95 Standard Test Methods for Flash Point of Liquids by Setaflash Closed-Cup Apparatus.	173.120
ASTM D 3828–93, Standard Test Methods for Flash Point by Small Scale Closed Tester	173.120.
ASTM D 4206–96 Standard Test Method for Sustained Burning of Liquid Mixtures Using the Small Scale Open-Cup Apparatus.	173.120.
ASTM D 4359–90 Standard Test Method for Determining Whether a Material is a Liquid or a Solid	171.8
ASTM E 8–89 Tension Testing of Metallic Materials	178.36; 178.37; 178.38; 178.39; 178.44; 178.45; 178.50; 178.51; 178.53; 178.55; 178.56; 178.57; 178.58; 178.59; 178.60; 178.61; 178.68; 178.251
ASTM E 23–60 Notched Bar Impact Testing of Metallic Materials	178.57; 179.400
ASTM E 112–88 Standard Test Methods for Determining Average Grain Size	178.44.
ASTM E 290–92 Standard Test Method for Semi-Guided Bend Test for Ductility of Metallic Materials	178.46.
ASTM E 681–85 Standard Test Method for Concentration Limits of Flammability of Chemicals	173.115
ASTM G 23–69 Standard Recommended Practice for Operating Light-and-Water Exposure Apparatus (Carbon-Arc Type) for Exposure of Nonmetallic Materials.	172.407; 172.519
ASTM G 26–70 Standard Recommended Practice for Operating Light-and-Water Exposure Apparatus (Xenon-Arc-Type) for Exposure of Nonmetallic Materials.	172.407; 172.519
ASTM G 31–72 (Reapproved 1995) Standard Practice for Laboratory Immersion Corrosion Testing of Metals.	173.137

Source and name of material	49 CFR reference
American Water Works Association, 1010 Vermont Avenue, NW., Suite 810, Washington, DC 20005	
AWWA Standard C207–55, Steel Pipe Flanges, 1955	178.360
American Welding Society, 550 N. W. Le Jeune Road, Miami, Florida 33126	
AWS Code B 3.0; Standard Qualification Procedure; 1972 (FRB 3.0–41, rev. May 1973)	178.356
AWS Code D 1.0; Code for Welding in Building Construction (FR D 1.0–66)	178.356
Association of American Railroads, American Railroads Building, 50 F Street, NW., Washington, DC 20001	
AAR Manual of Standards and Recommended Practices, Section C—Part III, Specifications for Tank Cars, Specification M–1002, September 1992.	173.31; 174.63; 179.6; 179.7; 179.12; 179.15; 179.16; 179.20; 179.22; 179.100; 179.101; 179.102; 179.103; 179.200; 179.201; 179.220; 179.300; 179.400; 180.509; 180.513; 180.515; 180.517.
AAR Manual of Standards and Recommended Practices, Section I, Specially Equipped Freight Car and Intermodal Equipment, 1988.	174.55; 174.63.
AAR Specifications for Design, Fabrication and Construction of Freight Cars, Volume 1, 1988	179.16.
Chlorine Institute, Inc., 2001 L Street, NW., Suite 506, Washington, DC 20036	
Type 1½ JQ 225, Dwg, H51970, Revision D, April 5, 1989; or Type 1½ JQ 225, Dwg. H50155, Revision F, April 4, 1989.	173.315
Standard Chlorine Angle Valve Assembly, Dwg. 104–6, December 1, 1982	178.337–9
Excess Flow Valve with Removable Seat, Dwg. 101–6, September 1, 1973	178.337–11
Excess Flow Valve with Removable Basket, Dwg. 106–5, September 1, 1973	178.337–11
Standards for Housing and Manway Covers for Steel Cargo Tanks, Dwg. 137–3, September 1, 1982	178.337-10
Compressed Gas Association, Inc., 1725 Jefferson Davis Highway, Arlington, Virginia 22202	
CGA Pamphlet C–3, Standards for Welding and Brazing on Thinned Walled Containers, 1975	178.47; 178.50; 178.51; 178.53; 178.54; 178.56; 178.57; 178.58; 178.59; 178.60; 178.61; 178.65; 178.68.
CGA Pamphlet C–5, Cylinder Service Life—Seamless Steel High Pressure Cylinders, 1991	173.302
CGA Pamphlet C–6, Standards for Visual Inspection of Steel Compressed Gas Cylinders, 1993	173.34; 180.519
CGA Pamphlet C–6.1, Standards for Visual Inspection of High Pressure Aluminum Compressed Gas Cylinders, 1995.	173.34
CGA Pamphlet C–6.2, Guidelines for Visual Inspection and Requalification of Fiber Reinforced High Pressure Cylinders, 1988.	173.34
CGA Pamphlet C–6.3, Guidelines for Visual Inspection and Requalification of Low Pressure Aluminum Compressed Gas Cylinders, 1991.	173.34
CGA Pamphlet C–7, A Guide for the Preparation of Precautionary Markings for Compressed Gas Containers, appendix A, issued 1992 (6th Edition)..	172.400a
CGA Pamphlet C–8, Standard for Requalification of DOT–3HT Cylinder Design, 1985	173.34
CGA Pamphlet C–11, Recommended Practices for Inspection of Compressed Gas Cylinders at Time of Manufacture, 1993.	178.35.
CGA Pamphlet C–12, Qualification Procedure for Acetylene Cylinder Design, 1994	173.34; 173.303; 178.59; 178.60.
CGA Pamphlet C–13, Guidelines for Periodic Visual Inspection and Requalification of Acetylene Cylinders, 1992.	173.34; 173.303
CGA Pamphlet C–14, Procedures for Fire Testing of DOT Cylinder Pressure Relief Device Systems, 1979.	173.34
CGA Pamphlet G–2.2 Tentative Standard Method for Determining Minimum of 0.2% Water in Anhydrous Ammonia, 1985.	173.315
CGA Pamphlet G–4.1, Cleaning Equipment for Oxygen Service, 1985	178.338
CGA Pamphlet S–1.1., Pressure Relief Device Standards—Part 1—Cylinders for Compressed Gases, 1994 (with the exception of paragraph 9.1.1.1).	173.34
CGA Pamphlet S–1.2, Safety Relief Device Standards Part 2—Cargo and Portable Tanks for Compressed Gases, 1980.	173.315; 173.318
CGA Technical Bulletin TB–2, Guidelines for Inspection and Repair of MC–330 and MC–331 Cargo Tanks, 1980.	180.413
Department of Defense (DOD), 2461 Eisenhower Avenue, Alexandria, VA 22331	
DOD TB 700–2; NAVSEAINST 8020.8; AFTO 11A–1–47; DLAR 8220.1: Explosives Hazard Classification Procedure, December 1989.	173.56

Source and name of material	49 CFR reference
Department of Energy (USDOE),	
100 Independence Avenue SW., Washington, DC 20545	
USDOE publications available from: Superintendent of Documents, Government Printing Office (GPO) or The National Technical Information Service (NTIS).	
USDOE, CAPE–1662, Revision 1, and Supplement 1, Civilian Application Program Engineering Drawings	178.356; 178.358
USDOE, Material and Equipment Specification No. SP–9, Rev. 1, and Supplement—Fire Resistant Phenolic Foam.	178.356; 178.358
USDOE, ORO 651—Uranium Hexafloride; A Manual of Good Practices, Revision 6, 1991 edition	173.417
USDOE, KSS–471, November 30, 1986—Proposal for Modifications to U.S. Department of Transportation Specification 21PF–1, Fire and Shock Resistant Phenolic Foam—Insulated Metal Overpack.	178.358
Fertilizer Institute,	
501 Second Street, NE., Washington, DC 20002	
Definition and Test Procedures for Ammonium Nitrate Fertilizer, August 1984	174.510
General Services Administration,	
Specification Office, Rm. 6662, 7th and D Street, SW., Washington, DC 20407	
Federal Specification RR–C–901C, Cylinders, Compressed Gas: High Pressure Steel DOT 3AA, and Aluminum Applications, January 15, 1981 (Superseding RR–C–901B, August 1, 1967).	173.302; 173.304; 173.336
Health and Human Services,	
Centers for Disease Control and Prevention, 1600 Clifton Road N.E., Atlanta, GA 30333	
Also available from: Superintendent of Documents, Government Printing Office (GPO), HHS Publication No. (CDC) 93–8385, Biosafety in Microbiological and Biomedical Laboratories, 3rd Edition, May 1993, Section II.	173.134
Institute of Makers of Explosives,	
1120 19th Street, Suite 310, Washington, DC 20036–3605	
IME Safety Library Publication No. 22 (IME Standard 22), Recommendation for the Safe Transportation of Detonators in a Vehicle with Certain Other Explosive Materials, May 1993..	177.835
International Atomic Energy Agency (IAEA),	
Wagramerstrasse 5, P.O. Box 100, A–1400, Vienna, Austria	
Also available from: Unipub Incorporated, P.O. Box 433, New York, NY 10016	
IAEA, Regulations for the Safe Transport of Radioactive Materials, Safety Series No. 6, 1985 Edition (As Amended 1990); Including 1985 Edition (Supplemented 1986 and 1988).	171.12
International Civil Aviation Organization (ICAO),	
P.O. Box 400, Place de l'Aviation Internationale, 1000 Sherbrooke Street West, Montreal, Quebec, Canada H3A 2R2	
ICAO Technical Instructions available from: INTEREG, International Regulations, Publishing and Distribution Organization, P.O. Box 60105, Chicago, IL 60660	
Technical Instructions for the Safe Transport of Dangerous Goods by Air, DOC 9284–AN/905, 1997–1998 Edition.	171.11; 172.401
International Maritime Organization (IMO),	
4 Albert Embankment, London, SE17SR, United Kingdom	
or New York Nautical Instrument & Service Corporation, 140 W. Broadway, New York, NY 10013	
International Maritime Dangerous Goods (IMDG) Code, 1994 Consolidated Edition, as amended by Amendment 28 (1996) (English edition).	171.12; 172;401; 172.407; 173.21, 176.2; 176.5; 176.11; 176.27; 176.30
International Organization for Standardization,	
Case Postale 56, CH–1211, Geneve 20, Switzerland	
Also available from: ANSI, 1430 Broadway, New York, NY 10018	
ISO–82–1974(E) Steels Tensile Testing	178.270–3
ISO–2431–1984(E) Standard Cup Method	173.121
ISO 780–1985(E) Packaging-Pictorial Marking and Handling of Goods	172.312
ISO 535–1991(E) Paper and board—Determination of water absorptiveness—Cobb method	178.516
ISO 3036–1975(E) Board—Determination of puncture resistance	178.708
ISO 3574–1986(E) Cold-reduced carbon steel sheet of commercial and drawing qualities	178.503
ISO 2592–1973(E) Petroleum products—Determination of flash and fire points—Cleveland open cup method.	173.120
ISO 9328–1—1991(E) Steel plates and strips for pressure purposes—Technical delivery conditions—Part 1: General requirements.	173.137
ISO/TR 4826–1979(E) - Sealed radioactive sources—Leak test methods	173.469
ISO 2919–1980(E) - Sealed radioactive sources—Classification	173.469
ISO 1496–3–1995(E) - Series 1 Freight Containers—Specification and Testing—Part 3: Tank Containers for Liquids, Gases and Pressurized Dry Bulk.	173.411
Health and Human Services	
Centers for Disease Control and Prevention, 1600 Clifton Road N.E., Atlanta GA 30333	
Also available from: Superintendent of Documents, Government Printing Office (GPO), HHS Publication No. (CDC) 93–8395, Biosafety in Microbiological and Biomedical Laboratories, 3rd Edition, May 1993, Section II	173.134
National Board of Boiler and Pressure Vessel Inspectors,	
1055 Crupper Avenue, Columbus, Ohio 43229	
National Board Inspection Code, A Manual for Boiler and Pressure Vessel Inspectors, NB–23, 1992 Edition.	180.413

Source and name of material	49 CFR reference
National Fire Protection Association, Batterymarch Park, Quincy, MA 02269	
NFPA Pamphlet No. 58—Standard for the Storage and Handling of Liquefied Petroleum Gases, 1979	173.315
National Institute of Standards and Technology, Department of Commerce, 5285 Port Royal Road, Springfield, VA 22151	
USDC, NBS Handbook H–28 (1957), 1957 Handbook of Screw-Thread Standards for Federal Services, Part II, December 1966 Edition.	178.45, 178.46
National Motor Freight Traffic Association, Inc., Agent 1616 P Street, NW., Washington, DC 20036	
National Motor Freight Classification NMF 100–I, 1982	177.841
Organization for Economic Cooperation and Development (OECD) OECD Publications and Information Center, 2001 L Street, Suite 700, Washington, DC 20036	
OECD Guideline for Testing of Chemicals, No.404 ''Acute Dermal Irritation/Corrosion'', 1992	173.137
Transport Canada, TDG Canadian Government Publishing Center, Supply and Services, Canada, Ottawa, Ontario, Canada K1A 059.	
Transportation of Dangerous Goods Regulations, 1 July 1985, SOR/85/77, incorporating the following Registration Numbers: SOR/85–314, SOR/85–585, SOR/85–609, SOR/86–526, SOR/88–635, SOR/87–335, SOR/87–186, SOR/89–39, SOR/89–294, SOR/90–847, SOR/91–711, SOR/91–712, SOR/92–447, SOR/92–600, SOR/93–203, SOR/93–274, SOR/93–525, SOR/94–146 and SOR/94–264 (English edition), SOR/95–241, and SOR95–547.	171.12a; 172.401; 172.502; 174.11
Truck Trailer Manufacturers Association, 1020 Princess Street, Alexandria, Virginia 22314	
TTMA RP No. 81, Performance of Spring Loaded Pressure Relief Valves on MC 306, MC 307, and MC 312 Tanks, May 24, 1989 Edition.	178.345–10
TTMA RP No. 61–94, Performance of Manhole and/or Fill Opening Assemblies on MC 306 and DOT 406 Cargo Tanks, December 28, 1994 Edition..	180.405
TTMA TB No. 107, Procedure for Testing Inservice, Unmarked, and/or Uncertified MC 306 Type Cargo Tank Manhole Covers, May 24, 1989 Edition.	180.405
United Nations, United Nations Sales Section, New York, NY 10017	
UN Recommendations on the Transport of Dangerous Goods, Ninth Revised Edition (1995)	172.401; 172.407; 172.519;
UN Recommendations on the Transport of Dangerous Goods, Manual of Tests and Criteria, Second Revised Edition, 1995.	173.21, 173.56 173.57, 173.124 173.128, 173.166 173.185.

(b) *List of informational materials not requiring incorporation by reference.* The materials listed in this paragraph do not require approval for incorporation by reference and are included for informational purposes. These materials may be used as noted in those sections in which the material is referenced.

Source and name of material	49 CFR reference
Association of American Railroads, American Railroads Building, 50 F Street, NW., Washington, DC 20001	
AAR Catalog Nos. SE60CHT; SE60CC; SE60CHTE; SE60CE; SE60DC; SE60DE	179.14
AAR Catalog Nos. SE67CC; SE67CE; SE67BHT; SE67BC; SE67BHTE; SE67BE	179.14
AAR Catalog Nos. SE68BHT; SE68BC; SE68BHTE; SE68BE	179.14
AAR Catalog Nos. SE69AHTE; SE69AE	179.14
AAR Catalog Nos. SF70CHT; SF70CC; SF70CHTE; SF70CE	179.14
AAR Catalog Nos. SF73AC; SF73AE; SF73AHT; SF73AHTE	179.14
AAR Catalog Nos. SF79CHT; SF79CC; SF79CHTE; SF79CE	179.14
Bureau of Explosives, Hazardous Materials Systems (BOE), Association of American Railroads, American Railroads Building, 50 F Street, NW., Washington, DC 20001	
Fetterley's Formula (The Determination of the Relief Dimensions for Safety Valves on Containers in which Liquefied gas is charged and when the exterior surface of the container is exposed to a temperature of 1,200 °F.).	173.315
Pamphlet 6, Illustrating Methods for Loading and Bracing Carload and Less-Than-Carload Shipments of Explosives and Other Dangerous Articles, 1962.	174.55; 174.101; 174.112; 174.115; 174.290
Pamphlet 6A (includes appendix No. 1, October 1944 and appendix 2, December 1945), Illustrating Methods for Loading and Bracing Carload and Less-Than-Carload Shipments of Loaded Projectiles, Loaded Bombs, etc., 1943.	174.101; 174.290
Pamphlet 6C, Illustrating Methods for Loading and Bracing Trailers and Less-Than-Trailer Shipments of Explosives and Other Dangerous Articles Via Trailer-on-Flatcar (TOFC) or Container-on-Flatcar (COFC), 1985.	174.55; 174.63; 174.101; 174.112; 174.115
Emergency Handling of Hazardous Materials in Surface Transportation, 1989	171.7

Source and name of material	49 CFR reference
Department of Transportation (USDOT), 400 Seventh St., SW., Washington, DC 20590	
.....	
National Association of Corrosion Engineers, 1440 South Creek, Houston, Texas 77084	
NACE Standard TM–01–69, Test Method Laboratory Corrosion Testing of Metals for the Process Industries, 1969.	173.136
Society of Plastics Industries, Inc., Organic Peroxide Producers Safety Division, 1275 K Street, NW., Suite 400, Washington, DC 20005	
Self Accelerating Decomposition Temperature Test, 1972	173.21

[Amdt. 171–111, 55 FR 52466, Dec. 21, 1990]

EDITORIAL NOTE: For FEDERAL REGISTER citations affecting § 171.7, see the List of CFR Sections Affected in the Finding Aids section of this volume.

§ 171.8 Definitions and abbreviations.

In this subchapter,

Aerosol means any non-refillable metal receptacle containing a gas compressed, liquefied or dissolved under pressure, the sole purpose of which is to expel a nonpoisonous (other than a Division 6.1 Packing Group III material) liquid, paste, or powder and fitted with a self-closing release device allowing the contents to be ejected by the gas.

Agricultural product means a hazardous material, other than a hazardous waste, whose end use directly supports the production of an agricultural commodity including, but not limited to a fertilizer, pesticide, soil amendment or fuel. An *agricultural product* is limited to a material in Class 3, 8 or 9, Division 2.1, 2.2, 5.1, or 6.1, or an ORM–D material.

Approval means a written authorization, including a competent authority approval, from the Associate Administrator to perform a function for which prior authorization by the Associate Administrator is required under subchapter C of this chapter.

Approved means approval issued or recognized by the Department unless otherwise specifically indicated in this subchapter.

Asphyxiant gas means a gas which dilutes or replaces oxygen normally in the atmosphere.

Atmospheric gases means air, nitrogen, oxygen, argon, krypton, neon and xenon.

Authorized Inspection Agency means: (1) A jurisdiction which has adopted and administers one or more sections of the ASME Boiler and Pressure Vessel Code as a legal requirement and has a representative serving as a member of the ASME Conference Committee; or (2) an insurance company which has been licensed or registered by the appropriate authority of a State of the United States or a Province of Canada to underwrite boiler and pressure vessel insurance in such State or Province.

Authorized Inspector means an Inspector who is currently commissioned by the National Board of Boiler and Pressure Vessel Inspectors and employed as an Inspector by an Authorized Inspection Agency.

Bag means a flexible packaging made of paper, plastic film, textiles, woven material or other similar materials.

Bar means 1 BAR = 100 kPa (14.5 psi).

Barge means a non-selfpropelled vessel.

Bottle means an inner packaging having a neck of relatively smaller cross section than the body and an opening capable of holding a closure for retention of the contents.

Bottom shell means that portion of a tank car tank surface, excluding the head ends of the tank car tank, that lies within two feet, measured circumferentially, of the bottom longitudinal center line of the tank car tank.

Box means a packaging with complete rectangular or polygonal faces, made of metal, wood, plywood, reconstituted wood, fiberboard, plastic, or other suitable material. Holes appropriate to the size and use of the packaging, for purposes such as ease of handling or opening, or to meet classification requirements, are permitted as

long as they do not compromise the integrity of the packaging during transportation, and are not otherwise prohibited in this subchapter.

Break-bulk means packages of hazardous materials that are handled individually, palletized, or unitized for purposes of transportation as opposed to bulk and containerized freight.

Btu means British thermal unit.

Bulk packaging means a packaging, other than a vessel or a barge, including a transport vehicle or freight container, in which hazardous materials are loaded with no intermediate form of containment and which has:

(1) A maximum capacity greater than 450 L (119 gallons) as a receptacle for a liquid;

(2) A maximum net mass greater than 400 kg (882 pounds) and a maximum capacity greater than 450 L (119 gallons) as a receptacle for a solid; or

(3) A water capacity greater than 454 kg (1000 pounds) as a receptacle for a gas as defined in § 173.115 of this subchapter.

Bureau of Explosives means the Bureau of Explosives (B of E) of the Association of American Railroads.

C means Celsius or Centigrade.

Captain of the Port (COTP) means the officer of the Coast Guard, under the command of a District Commander, so designated by the Commandant for the purpose of giving immediate direction to Coast Guard law enforcement activities within an assigned area. As used in this subchapter, the term *Captain of the Port* includes an authorized representative of the Captain of the Port.

Carfloat means a vessel that operates on a short run on an irregular basis and serves one or more points in a port area as an extension of a rail line or highway over water, and does not operate in ocean, coastwise, or ferry service.

Cargo aircraft only means an aircraft that is used to transport cargo and is not engaged in carrying passengers. For purposes of this subchapter, the terms *cargo aircraft only, cargo-only aircraft* and *cargo aircraft* have the same meaning.

Cargo tank means a bulk packaging which:

(1) Is a tank intended primarily for the carriage of liquids or gases and includes appurtenances, reinforcements, fittings, and closures (for *tank*, see 49 CFR 178.345–1(c), 178.337–1, or 178.338–1, as applicable);

(2) Is permanently attached to or forms a part of a motor vehicle, or is not permanently attached to a motor vehicle but which, by reason of its size, construction or attachment to a motor vehicle is loaded or unloaded without being removed from the motor vehicle; and

(3) Is not fabricated under a specification for cylinders, portable tanks, tank cars, or multi-unit tank car tanks.

Cargo tank motor vehicle means a motor vehicle with one or more cargo tanks permanently attached to or forming an integral part of the motor vehicle.

Cargo vessel means: (1) Any vessel other than a passenger vessel; and

(2) Any ferry being operated under authority of a change of character certificate issued by a Coast Guard Officer-in-Charge, Marine Inspection.

Carrier means a person engaged in the transportation of passengers or property by:

(1) Land or water, as a common, contract, or private carrier, or

(2) Civil aircraft.

CC means closed-cup.

Character of vessel means the type of service in which the vessel is engaged at the time of carriage of a hazardous material.

Class means hazard class. See *hazard class.*

Class 1. See § 173.50 of this subchapter.

Class 2. See § 173.115 of this subchapter.

Class 3. See § 173.120 of this subchapter.

Class 4. See § 173.124 of this subchapter.

Class 5. See § 173.128 of this subchapter.

Class 6. See § 173.132 of this subchapter.

Class 7. See § 173.403 of this subchapter.

Class 8. See § 173.136 of this subchapter.

Class 9. See § 173.140 of this subchapter.

Closure means a device which closes an opening in a receptacle.

COFC means container-on-flat-car.

Combination packaging means a combination of packaging, for transport purposes, consisting of one or more inner packagings secured in a non-bulk outer packaging. It does not include a composite packaging.

Combustible liquid. See § 173.120 of this subchapter.

Compatibility group letter means a designated alphabetical letter used to categorize different types of explosive substances and articles for purposes of stowage and segregation. See § 173.52 of this subchapter.

Competent Authority means a national agency responsible under its national law for the control or regulation of a particular aspect of the transportation of hazardous materials (dangerous goods). The term *Appropriate Authority*, as used in the ICAO Technical Instructions, has the same meaning as *Competent Authority*. For purposes of this subchapter, the Associate Administrator for Hazardous Materials Safety is the Competent Authority for the United States.

Composite packaging means a packaging consisting of an outer packaging and an inner receptacle, so constructed that the inner receptacle and the outer packaging form an integral packaging. Once assembled it remains thereafter an integrated single unit; it is filled, stored, shipped and emptied as such.

Compressed gas. See § 173.115 of this subchapter.

Consumer commodity means a material that is packaged and distributed in a form intended or suitable for sale through retail sales agencies or instrumentalities for consumption by individuals for purposes of personal care or household use. This term also includes drugs and medicines.

Containership means a cargo vessel designed and constructed to transport, within specifically designed cells, portable tanks and freight containers which are lifted on and off with their contents intact.

Corrosive material. See § 173.136 of this subchapter.

Crate means an outer packaging with incomplete surfaces.

Crewmember means a person assigned to perform duty in an aircraft during flight time.

Cryogenic liquid. See § 173.115(g) of this subchapter.

Cylinder means a pressure vessel designed for pressures higher than 40 psia and having a circular cross section. It does not include a portable tank, multi-unit tank car tank, cargo tank, or tank car.

Dangerous when wet material. See § 173.124 of this subchapter.

Design Certifying Engineer means a person registered with the Department in accordance with subpart F of part 107 of this chapter who has the knowledge and ability to perform stress analysis of pressure vessels and to otherwise determine whether a cargo tank design and construction meets the applicable DOT specification. In addition, Design Certifying Engineer means a person who meets, at a minimum, any one of the following:

(1) Has an engineering degree and one year of work experience in cargo tank structural or mechanical design.

(2) Is currently registered as a professional engineer by the appropriate authority of a State of the United States or a Province of Canada.

(3) Has at least three years experience in performing the duties of a Design Certifying Engineer by September 1, 1991, and was registered with the Department by December 31, 1995.

Designated facility means a hazardous waste treatment, storage, or disposal facility that has been designated on the manifest by the generator.

District Commander means the District Commander of the Coast Guard, or his authorized representative, who has jurisdiction in the particular geographical area.

Division means a subdivision of a hazard class.

DOD means the U.S. Department of Defense.

Domestic transportation means transportation between places within the United States other than through a foreign country.

Drum means a flat-ended or convex-ended cylindrical packaging made of metal, fiberboard, plastic, plywood, or other suitable materials. This definition also includes packagings of other shapes made of metal or plastic (e.g., round taper-necked packagings or pail-

shaped packagings) but does not include cylinders, jerricans, wooden barrels or bulk packagings.

Elevated temperature material means a material which, when offered for transportation or transported in a bulk packaging:

(1) Is in a liquid phase and at a temperature at or above 100°C (212°F);

(2) Is in a liquid phase with a flash point at or above 37.8°C (100°F) that is intentionally heated and offered for transportation or transported at or above its flash point; or

(3) Is in a solid phase and at a temperature at or above 240°C (464°F).

Engine means a locomotive propelled by any form of energy and used by a railroad.

EPA means U.S. Environmental Protection Agency.

Etiologic agent. See § 173.134 of this subchapter.

EX number means a number, preceded by the prefix *Ex-*, which is assigned by the Associate Administrator for Hazardous Materials Safety to identify an explosive which has been approved. See § 173.56 of this subchapter.

Exemption means a document issued under the authority of 49 U.S.C. 5117 by the Associate Administrator that authorizes a person to perform a function that is not otherwise authorized under this subchapter, subchapter C, or other regulations issued under 49 U.S.C. 5101–5127 (e.g., Federal Highway Administration routing).

Explosive. See § 173.50 of this subchapter.

F means degree Fahrenheit.

Federal hazardous material transportation law means 49 U.S.C. 5101 *et seq.*

Farmer means a person engaged in the production or raising of crops, poultry, or livestock.

Ferry vessel means a vessel which is limited in its use to the carriage of deck passengers or vehicles or both, operates on a short run on a frequent schedule between two points over the most direct water route, other than in ocean or coastwise service, and is offered as a public service of a type normally attributed to a bridge or tunnel.

Filling density has the following meanings:

(1) For compressed gases in cylinders, see § 173.304(a)(2) Table Note 1.

(2) For compressed gases in tank cars, see § 173.314(c) Table Note 1.

(3) For compressed gases in cargo tanks and portable tanks, see § 173.315(a) Table Note 1.

(4) For cryogenic liquids in cylinders, except hydrogen, see § 173.316(c)(1).

(5) For hydrogen, cryogenic liquid in cylinders, see § 173.316(c)(3) Table Note 1.

(6) For cryogenic liquids in cargo tanks, see § 173.318(f)(1).

(7) For cryogenic liquids in tank cars, see § 173.319(d)(1).

Flammable gas. See § 173.115 of this subchapter.

Flammable liquid. See § 173.120 of this subchapter.

Flammable solid. See § 173.124 of this subchapter.

Flash point. See § 173.120 of this subchapter.

Freight container means a reusable container having a volume of 64 cubic feet or more, designed and constructed to permit being lifted with its contents intact and intended primarily for containment of packages (in unit form) during transportation.

Fuel tank means a tank other than a cargo tank, used to transport flammable or combustible liquid, or compressed gas for the purpose of supplying fuel for propulsion of the transport vehicle to which it is attached, or for the operation of other equipment on the transport vehicle.

Fumigated lading. See §§ 172.302(g) and 173.9.

Gas means a material which has a vapor pressure greater than 300 kPa (43.5 psi) at 50°C (122°F) or is completely gaseous at 20°C (68°F) at a standard pressure of 101.3 kPa (14.7 psi).

General public means, for purposes of subpart I of part 172, and subpart I of part 173 of this subchapter, any person other than an occupationally exposed hazmat employee.

Gross weight or *Gross mass* means the weight of a packaging plus the weight of its contents.

Hazard class means the category of hazard assigned to a hazardous material under the definitional criteria of part 173 of this subchapter and the provisions of the § 172.101 Table. A material may meet the defining criteria for

more than one hazard class but is assigned to only one hazard class.

Hazard zone means one of four levels of hazard (Hazard Zones A through D) assigned to gases, as specified in § 173.116(a) of this subchapter, and one of two levels of hazards (Hazard Zones A and B) assigned to liquids that are poisonous by inhalation, as specified in § 173.133(a) of this subchapter. A hazard zone is based on the LC50 value for acute inhalation toxicity of gases and vapors, as specified in § 173.133(a).

Hazardous material means a substance or material, which has been determined by the Secretary of Transportation to be capable of posing an unreasonable risk to health, safety, and property when transported in commerce, and which has been so designated. The term includes hazardous substances, hazardous wastes, marine pollutants, and elevated temperature materials as defined in this section, materials designated as hazardous under the provisions of § 172.101 of this subchapter, and materials that meet the defining criteria for hazard classes and divisions in part 173 of this subchapter.

Hazardous substance for the purposes of this subchapter, means a material, including its mixtures and solutions, that—

(1) Is listed in the Appendix A to § 172.101 of this subchapter;

(2) Is in a quantity, in one package, which equals or exceeds the reportable quantity (RQ) listed in the Appendix A to § 172.101 of this subchapter; and

(3) When in a mixture or solution—

(i) For radionuclides, conforms to paragraph 6 of the Appendix A to § 172.101.

(ii) For other than radionuclides, is in a concentration by weight which equals or exceeds the concentration corresponding to the RQ of the material, as shown in the following table:

RQ pounds (kilograms)	Concentration by weight	
	Percent	PPM
5000 (2270)	10	100,000
1000 (454)	2	20,000
100 (45.4)	0.2	2,000
10 (4.54)	0.02	200
1 (0.454)	0.002	20

The term does not include petroleum, including crude oil or any fraction thereof which is not otherwise specifically listed or designated as a hazardous substance in Appendix A to § 172.101 of this subchapter, and the term does not include natural gas, natural gas liquids, liquefied natural gas, or synthetic gas usable for fuel (or mixtures of natural gas and such synthetic gas).

Hazardous waste, for the purposes of this chapter, means any material that is subject to the Hazardous Waste Manifest Requirements of the U.S. Environmental Protection Agency specified in 40 CFR part 262.

Hazmat employee means a person who is employed by a hazmat employer and who in the course of employment directly affects hazardous materials transportation safety. This term includes an owner-operator of a motor vehicle which transports hazardous materials in commerce. This term includes an individual, including a self-employed individual, employed by a hazmat employer who, during the course of employment:

(1) Loads, unloads, or handles hazardous materials;

(2) Manufactures, tests, reconditions, repairs, modifies, marks, or otherwise represents containers, drums, or packagings as qualified for use in the transportation of hazardous materials;

(3) Prepares hazardous materials for transportation;

(4) Is responsible for safety of transporting hazardous materials; or

(5) Operates a vehicle used to transport hazardous materials.

Hazmat employer means a person who uses one or more of its employees in connection with: transporting hazardous materials in commerce; causing hazardous materials to be transported or shipped in commerce; or representing, marking, certifying, selling, offering, manufacturing, reconditioning, testing, repairing, or modifying containers, drums, or packagings as qualified for use in the transportation of hazardous materials. This term includes an owner-operator of a motor vehicle which transports hazardous materials in commerce. This term also includes any department, agency, or instrumentality of the United States, a State, a political subdivision of a State, or an Indian tribe engaged in an

activity described in the first sentence of this definition.

Hermetically sealed means closed by fusion, gasketing, crimping, or equivalent means so that no gas or vapor can enter or escape.

IAEA means International Atomic Energy Agency.

IATA means International Air Transport Association.

ICAO means International Civil Aviation Organization.

IMO means International Maritime Organization.

Infectious substance (etiologic agent). See §173.134 of this subchapter.

Inner packaging means a packaging for which an outer packaging is required for transport. It does not include the inner receptacle of a composite packaging.

Inner receptacle means a receptacle which requires an outer packaging in order to perform its containment function. The inner receptacle may be an inner packaging of a combination packaging or the inner receptacle of a composite packaging.

Intermediate bulk container (IBC) means a rigid or flexible portable packaging, other than a cylinder or portable tank, which is designed for mechanical handling. Standards for intermediate bulk containers manufactured in the United States are set forth in subparts N and O of part 178 of this subchapter.

Intermediate packaging means a packaging which encloses an inner packaging or article and is itself enclosed in an outer packaging.

Intermodal container means a freight container designed and constructed to permit it to be used interchangeably in two or more modes of transport.

Intermodal portable tank or *IM portable tank* means a specific class of portable tanks designed primarily for international intermodal use.

International transportation means transportation—

(1) Between any place in the United States and any place in a foreign country;

(2) Between places in the United States through a foreign country; or

(3) Between places in one or more foreign countries through the United States.

Irritating material. See §173.132(a)(2) of this subchapter.

Jerrican means a metal or plastic packaging of rectangular or polygonal cross-section.

Limited quantity, when specified as such in a section applicable to a particular material, means the maximum amount of a hazardous material for which there is a specific labeling or packaging exception.

Liquid means a material, other than an elevated temperature material, with a melting point or initial melting point of 20°C (68°F) or lower at a standard pressure of 101.3 kPa (14.7 psi). A viscous material for which a specific melting point cannot be determined must be subjected to the procedures specified in ASTM D 4359 ''Standard Test Method for Determining Whether a Material is Liquid or Solid''.

Liquid phase means a material that meets the definition of *liquid* when evaluated at the higher of the temperature at which it is offered for transportation or at which it is transported, not at the 37.8°C (100°F) temperature specified in ASTM D 4359–84.

Magazine vessel means a vessel used for the receiving, storing, or dispensing of explosives.

Magnetic material. See §173.21(d) of this subchapter.

Marine pollutant, means a hazardous material which is listed in appendix B to §172.101 of this subchapter and, when in a solution or mixture of one or more marine pollutants, is packaged in a concentration which equals or exceeds:

(1) Ten percent by weight of the solution or mixture for materials listed in the appendix; or

(2) One percent by weight of the solution or mixture for materials that are identified as severe marine pollutants in the appendix.

Marking means a descriptive name, identification number, instructions, cautions, weight, specification, or UN marks, or combinations thereof, required by this subchapter on outer packagings of hazardous materials.

Material of trade means a hazardous material, other than a hazardous waste, that is carried on a motor vehicle—

(1) For the purpose of protecting the health and safety of the motor vehicle operator or passengers;

(2) For the purpose of supporting the operation or maintenance of a motor vehicle (including its auxiliary equipment); or

(3) By a private motor carrier (including vehicles operated by a rail carrier) in direct support of a principal business that is other than transportation by motor vehicle.

Material poisonous by inhalation means:

(1) A gas meeting the defining criteria in § 173.115(c) of this subchapter and assigned to Hazard Zone A, B, C, or D in accordance with § 173.116(a) of this subchapter;

(2) A liquid (other than as a mist) meeting the defining criteria in § 173.132(a)(1)(iii) of this subchapter and assigned to Hazard Zone A or B in accordance with § 173.133(a) of this subchapter; or

(3) Any material identified as an inhalation hazard by a special provision in Column 7 of the § 172.101 Table.

Maximum Allowable Working Pressure or *MAWP* For DOT specification cargo tanks used to transport liquid hazardous materials, see § 178.345–1(k).

Maximum capacity means the maximum inner volume of receptacles or packagings.

Maximum net mass means the allowable maximum net mass of contents in a single packaging, or as used in subpart M of part 178 of this subchapter, the maximum combined mass of inner packaging, and the contents thereof.

Miscellaneous hazardous material. See § 173.140 of this subchapter.

Mixture means a material composed of more than one chemical compound or element.

Mode means any of the following transportation methods; rail, highway, air, or water.

Motor vehicle includes a vehicle, machine, tractor, trailer, or semitrailer, or any combination thereof, propelled or drawn by mechanical power and used upon the highways in the transportation of passengers or property. It does not include a vehicle, locomotive, or car operated exclusively on a rail or rails, or a trolley bus operated by electric power derived from a fixed overhead wire, furnishing local passenger transportation similar to street-railway service.

Name of contents means the proper shipping name as specified in § 172.101 of this subchapter.

Navigable waters means, for the purposes of this subchapter, waters of the United States, including the territorial seas.

Non-bulk packaging means a packaging which has:

(1) A maximum capacity of 450 L (119 gallons) or less as a receptacle for a liquid;

(2) A maximum net mass of 400 kg (882 pounds) or less and a maximum capacity of 450 L (119 gallons) or less as a receptacle for a solid; or

(3) A water capacity of 454 kg (1000 pounds) or less as a receptacle for a gas as defined in § 173.115 of this subchapter.

Nonflammable gas. See § 173.115 of this subchapter.

N.O.S. means not otherwise specified.

n.o.s. description means a shipping description from the § 172.101 table which includes the abbreviation *n.o.s.*, and as contained in the lists in § 172.203(k)(3) of this subchapter, regarding additional description requirements.

NPT means an American Standard taper pipe thread conforming to requirements of Federal Standard H28, part II, section VII. See § 171.7(d)(12).

NRC (non-reusable container) means a packaging (container) whose reuse is restricted in accordance with the provisions of § 173.28 of this subchapter.

Occupationally exposed hazmat employee means a hazmat employee whose duties involve exposure to ionizing radiation.

Occupied caboose means a rail car being used to transport non-passenger personnel.

Officer in Charge, Marine Inspection means a person from the civilian or military branch of the Coast Guard designated as such by the Commandant and who under the supervision and direction of the Coast Guard District Commander is in charge of a designated inspection zone for the performance of duties with respect to the enforcement and administration of title 52, Revised Statutes, acts amendatory thereof or supplemental thereto,

rules and regulations thereunder, and the inspection required thereby.

Offshore supply vessel means a cargo vessel of less than 500 gross tons that regularly transports goods, supplies or equipment in support of exploration or production of offshore mineral or energy resources.

Operator means a person who controls the use of an aircraft, vessel, or vehicle.

Organic peroxide. See §173.128 of this subchapter.

ORM means other regulated material. See §173.144 of this subchapter.

Outage or *ullage* means the amount by which a packaging falls short of being liquid full, usually expressed in percent by volume.

Outer packaging means the outermost enclosure of a composite or combination packaging together with any absorbent materials, cushioning and any other components necessary to contain and protect inner receptacles or inner packagings.

Overpack, except as provided in subpart K of part 178 of this subchapter, means an enclosure that is used by a single consignor to provide protection or convenience in handling of a package or to consolidate two or more packages. *Overpack* does not include a transport vehicle, freight container, or aircraft unit load device. Examples of overpacks are one or more packages:

(1) Placed or stacked onto a load board such as a pallet and secured by strapping, shrink wrapping, stretch wrapping, or other suitable means; or

(2) Placed in a protective outer packaging such as a box or crate.

Oxidizer. See §173.127 of this subchapter.

Oxidizing gas means a gas which may, generally by providing oxygen, cause or contribute to the combustion of other material more than air does.

Oxygen generator (chemical) means a device containing chemicals that upon activation release oxygen as a product of chemical reaction.

Package or *Outside Package* means a packaging plus its contents. For radioactive materials, see §173.403 of this subchapter.

Packaging means a receptacle and any other components or materials necessary for the receptacle to perform its containment function in conformance with the minimum packing requirements of this subchapter. For radioactive materials packaging, see §173.403 of this subchapter.

Packing group means a grouping according to the degree of danger presented by hazardous materials. Packing Group I indicates great danger; Packing Group II, medium danger; Packing Group III, minor danger. See §172.101(f) of this subchapter.

Passenger (With respect to vessels and for the purposes of part 176 only) means a person being carried on a vessel other than:

(1) The owner or his representative;

(2) The operator;

(3) A bona fide member of the crew engaged in the business of the vessel who has contributed no consideration for his carriage and who is paid for his services; or

(4) A guest who has not contributed any consideration directly or indirectly for his carriage.

Passenger-carrying aircraft means an aircraft that carries any person other than a crewmember, company employee, an authorized representative of the United States, or a person accompanying the shipment.

Passenger vessel means—

(1) A vessel subject to any of the requirements of the International Convention for the Safety of Life at Sea, 1974, which carries more than 12 passengers;

(2) A cargo vessel documented under the laws of the United States and not subject to that Convention, which carries more than 16 passengers;

(3) A cargo vessel of any foreign nation that extends reciprocal privileges and is not subject to that Convention and which carries more than 16 passengers; and

(4) A vessel engaged in a ferry operation and which carries passengers.

Person means an individual, firm, copartnership, corporation, company, association, joint-stock association, including any trustee, receiver, assignee, or similar representative thereof; or government, Indian tribe, or agency or instrumentality of any government or Indian tribe when it offers hazardous

material for transportation in commerce or transports hazardous material to further a commercial enterprise, but such term does not include:

(1) The United States Postal Service;

(2) For the purposes of 49 U.S.C. 5123 and 5124, any agency or instrumentality of the Federal Government.

Placarded car means a rail car which is placarded in accordance with the requirements of part 172 of this subchapter except those cars displaying only the FUMIGATION placards as required by § 172.510.

Poisonous gas. See § 173.115 of this subchapter.

Poisonous materials. See § 173.132 of this subchapter.

Portable tank means a bulk packaging (except a cylinder having a water capacity of 1000 pounds or less) designed primarily to be loaded onto, or on, or temporarily attached to a transport vehicle or ship and equipped with skids, mountings, or accessories to facilitate handling of the tank by mechanical means. It does not include a cargo tank, tank car, multi-unit tank car tank, or trailer carrying 3AX, 3AAX, or 3T cylinders.

Preferred route or *Preferred highway* is a highway for shipment of *highway route controlled quantities* of radioactive materials so designated by a State routing agency, and any Interstate System highway for which an alternative highway has not been designated by such State agency as provided by § 177.825(b) of this subchapter.

Primary hazard means the hazard class of a material as assigned in the § 172.101 table.

Private track or *Private siding* means track located outside of a carrier's right-of-way, yard, or terminals where the carrier does not own the rails, ties, roadbed, or right-of-way and includes track or portion of track which is devoted to the purpose of its user either by lease or written agreement, in which case the lease or written agreement is considered equivalent to ownership.

Proper shipping name means the name of the hazardous material shown in Roman print (not italics) in § 172.101 of this subchapter.

P.s.i. or *psi* means pounds per square inch.

P.s.i.a. or psia means pounds per square inch absolute.

P.s.i.g. or psig means pounds per square inch gauge.

Public vessel means a vessel owned by and being used in the public service of the United States. It does not include a vessel owned by the United States and engaged in a trade or commercial service or a vessel under contract or charter to the United States.

Pyrophoric liquid. See § 173.124(b) of this subchapter.

Radioactive materials. See § 173.403 of this subchapter for definitions relating to radioactive materials.

Rail car means a car designed to carry freight or non-passenger personnel by rail, and includes a box car, flat car, gondola car, hopper car, tank car, and occupied caboose.

Railroad means a person engaged in transportation by rail.

Receptacle means a containment vessel for receiving and holding materials, including any means of closing.

Registered Inspector means a person registered with the Department in accordance with subpart F of part 107 of this chapter who has the knowledge and ability to determine whether a cargo tank conforms with the applicable DOT specification. In addition, Registered Inspector means a person who meets, at a minimum, any one of the following:

(1) Has an engineering degree and one year of work experience.

(2) Has an associate degree in engineering and two years of work experience.

(3) Has a high school diploma or General Equivalency Diploma) and three years of work experience.

(4) Has at least three years experience in performing the duties of a Registered Inspector by September 1, 1991, and was registered with the Department by December 31, 1995.

Regulated medical waste. See § 173.134 of this subchapter.

Reportable quantity (RQ) for the purposes of this subchapter means the quantity specified in column 3 of the appendix to § 172.101 for any material identified in Column 1 of the appendix.

Research means investigation or experimentation aimed at the discovery

of new theories or laws and the discovery and interpretation of facts or revision of accepted theories or laws in the light of new facts.

Residue means the hazardous material remaining in a packaging, including a tank car, after its contents have been unloaded to the maximum extent practicable and before the packaging is either refilled or cleaned of hazardous material and purged to remove any hazardous vapors.

RSPA means the Research and Special Programs Administration, U.S. Department of Transportation, Washington, DC 20590.

SADT means self-accelerated decomposition temperature. See § 173.21(f) of this subchapter.

Salvage packaging means a special packaging conforming to § 173.3 of this subchapter into which damaged, defective or leaking hazardous materials packages, or hazardous materials that have spilled or leaked, are placed for purposes of transport for recovery or disposal.

SCF (standard cubic foot) means one cubic foot of gas measured at 60° F. and 14.7 psia.

Sheathing means a covering consisting of a smooth layer of wood placed over metal and secured to prevent any movement.

Shipping paper means a shipping order, bill of lading, manifest or other shipping document serving a similar purpose and containing the information required by §§ 172.202, 172.203 and 172.204.

Siftproof packaging means a packaging impermeable to dry contents, including fine solid material produced during transportation.

Single packaging means a non-bulk packaging other than a combination packaging.

Solid means a material which is not a gas or a liquid.

Solution means any homogeneous liquid mixture of two or more chemical compounds or elements that will not undergo any segregation under conditions normal to transportation.

Specification packaging means a packaging conforming to one of the specifications or standards for packagings in part 178 or part 179 of this subchapter.

Spontaneously combustible material. See § 173.124(b) of this subchapter.

State means a State of the United States, the District of Columbia, the Commonwealth of Puerto Rico, the Commonwealth of the Northern Mariana Islands, the Virgin Islands, American Samoa, Guam, or any other territory or possession of the United States designated by the Secretary.

State-designated route means a preferred route selected in accordance with U.S. DOT ''Guidelines for Selecting Preferred Highway Routes for Highway Route Controlled Quantities of Radioactive Materials'' or an equivalent routing analysis which adequately considers overall risk to the public.

Stowage means the act of placing hazardous materials on board a vessel.

Strong outside container means the outermost enclosure which provides protection against the unintentional release of its contents under conditions normally incident to transportation.

Subsidiary hazard means a hazard of a material other than the primary hazard. (See *primary hazard*).

Table in § 172.101 or *§ 172.101 table* means the Hazardous Materials Table in § 172.101 of this subchapter.

Technical name means a recognized chemical name or microbiological name currently used in scientific and technical handbooks, journals, and texts. Generic descriptions are authorized for use as technical names provided they readily identify the general chemical group, or microbiological group. Examples of acceptable generic chemical descriptions are organic phosphate compounds, petroleum aliphatic hydrocarbons and tertiary amines. For proficiency testing only, generic microbiological descriptions such as bacteria, mycobacteria, fungus, and viral samples may be used. Except for names which appear in subpart B of part 172 of this subchapter, trade names may not be used as technical names.

TOFC means trailer-on-flat-car.

Top shell means the tank car tank surface, excluding the head ends and bottom shell of the tank car tank.

Trailership means a vessel, other than a carfloat, specifically equipped to carry motor transport vehicles and

fitted with installed securing devices to tie down each vehicle. The term *trailership* includes *Roll-on/Roll-off (RO/RO)* vessels.

Train means one or more engines coupled with one or more rail cars, except during switching operations or where the operation is that of classifying and assembling rail cars within a railroad yard for the purpose of making or breaking up trains.

Trainship means a vessel other than a rail car ferry or carfloat, specifically equipped to transport railroad vehicles, and fitted with installed securing devices to tie down each vehicle.

Transport vehicle means a cargo-carrying vehicle such as an automobile, van, tractor, truck, semitrailer, tank car or rail car used for the transportation of cargo by any mode. Each cargo-carrying body (trailer, rail car, etc.) is a separate transport vehicle.

UFC means Uniform Freight Classification.

UN means United Nations.

UN standard packaging means a packaging conforming to standards in the UN Recommendations on the Transport of Dangerous Goods.

Unit load device means any type of freight container, aircraft container, aircraft pallet with a net, or aircraft pallet with a net over an igloo.

United States means a State of the United States, the District of Columbia, the Commonwealth of Puerto Rico, the Commonwealth of the Northern Mariana Islands, the Virgin Islands, American Samoa, Guam, or any other territory or possession of the United States designated by the Secretary.

Vessel includes every description of watercraft, used or capable of being used as a means of transportation on the water.

Viscous liquid means a liquid material which has a measured viscosity in excess of 2500 centistokes at 25° C. (77° F.) when determined in accordance with the procedures specified in ASTM Method D 445–72 ''Kinematic Viscosity of Transparent and Opaque Liquids (and the Calculation of Dynamic Viscosity)'' or ASTM Method D 1200–70 ''Viscosity of Paints, Varnishes, and Lacquers by Ford Viscosity Cup.''

Volatility refers to the relative rate of evaporation of materials to assume the vapor state.

Water reactive material. See § 173.124(c) of this subchapter.

Water resistant means having a degree of resistance to permeability by and damage caused by water in liquid form.

Wooden barrel means a packaging made of natural wood, of round cross-section, having convex walls, consisting of staves and heads and fitted with hoops.

W.T. means watertight.

[Amdt. 171–32, 41 FR 15994, Apr. 15, 1976]

EDITORIAL NOTE: For FEDERAL REGISTER citations affecting § 171.8, see the List of CFR Sections Affected appearing in the Finding Aids section of this volume.

EFFECTIVE DATE NOTE: By Amdt. 171–151, 62 FR 1227, Jan. 8, 1997, in § 171.8, the definition for ''Fumigated lading'' was added, effective Oct. 1, 1997. At 62 FR 39398, July 22, 1997, the effective date was delayed until Oct. 1, 1998.

§ 171.9 Rules of construction.

(a) In this subchapter, unless the context requires otherwise: (1) Words imparting the singular include the plural;

(2) Words imparting the plural include the singular; and

(3) Words imparting the masculine gender include the feminine;

(b) In this subchapter, the word: (1) ''Shall'' is used in an imperative sense;

(2) ''Must'' is used in an imperative sense;

(3) ''Should'' is used in a recommendatory sense;

(4) ''May'' is used in a permissive sense to state authority or permission to do the act described, and the words ''no person may * * *'' or ''a person may not * * *'' means that no person is required, authorized, or permitted to do the act described; and

(5) ''Includes'' is used as a word of inclusion not limitation.

[Amdt. 171–32, 41 FR 15996, Apr. 15, 1976, as amended by Amdt. 171–32A, 41 FR 40630, Sept. 20, 1976; Amdt. 171–121, 58 FR 51528, Oct. 1, 1993]

§ 171.10 Units of measure.

(a) *General.* To ensure compatibility with international transportation standards, most units of measure in this subchapter are expressed using the

International System of Units (''SI'' or metric). Where SI units appear, they are the regulatory standard. U.S. standard or customary units, which appear in parentheses following the SI units, are for information only and are not intended to be the regulatory standard.

(b) Abbreviations for SI units of measure generally used throughout this subchapter are as shown in paragraph (c) of this section. Customary units shown throughout this subchapter are generally not abbreviated.

(c) *Conversion values.* (1) Conversion values are provided in the following table and are based on values provided in ASTM E 380–89, ''Standard for Metric Practice.''

(2) If an exact conversion is needed, the following conversion table should be used.

TABLE OF CONVERSION FACTORS FOR SI UNITS

Measurement	SI to U.S. standard	U.S. standard to SI
Activity	1 TBq=27 Ci	1 Ci=0.037 TBq.
Length	1 cm=0.3937008 in	1 in=2.540000 cm
	1 m=3.280840 ft	1 ft=0.3048000 m
Thickness	1 mm=0.03937008 in	1 in=25.40000 mm
Mass (weight)	1 kg=2.204622 lb	1 lb=0.4535924 kg
	1 gr=0.03527397 oz	1 oz=28.34952 gr
Pressure	1 kPa=0.1450377 psi	1 psi=6.894757 kPa
	1 Bar=100 kPa=14.504 psi	1 psi=0.06895 Bar
	1 kPa=7.5 mm Hg	
Radiation level	1 Sv/hr=100 rem/hr	1 rem/hr=0.01 Sv/hr
Volume (liquid)	1 l=0.2641720 gal	1 gal=3.785412 l
	1 ml=0.03381402 oz	1 oz=29.57353 ml
	1 m^3=35.31466 ft^3	1 ft^3=0.02831685 m^3
Density	1 kg/m^3=0.06242797 lb/ft^3	1 lb/ft^3=16.01846 kg/m^3

Abbreviation for units of measure are as follows:
Unit of measure and abbreviation:
(SI): millimeter, mm; centimeter, cm; meter, m; gram, g; kilogram, kg; kiloPascal, kPa; liter, L; milliliter, ml; cubic meter, m^3; Terabecquerel, TBq; Gigabecquerel, GBq; millisievert, mSv;
(U.S.): Inch, in; foot, ft; ounce, oz; pound, lb; pounds per square inch, psi; gallon, gal; cubic feet, ft^3; Curie, Ci; millicurie, mCi; millirem, mrem.

[Amdt. 171–111, 56 FR 66159, Dec. 20, 1991, as amended by Amdt. 171–136, 60 FR 49108, Sept. 21, 1995; Amdt. 171–135, 60 FR 50302, Sept. 28, 1995]

§ 171.11 Use of ICAO Technical Instructions.

Notwithstanding the requirements of parts 172 and 173 of this subchapter, a hazardous material may be transported by aircraft, and by motor vehicle either before or after being transported by aircraft, in accordance with the ICAO Technical Instructions if the hazardous material:

(a) Is packaged, marked, labeled, classified, described and certified on a shipping paper and otherwise in a condition for shipment as required by the ICAO Technical Instructions;

(b) Is within the quantity limits prescribed for transportation by either passenger-carrying or cargo aircraft, as appropriate, as specified in the ICAO Technical Instructions;

(c) Is not a forbidden material or package according to § 173.21 of this subchapter or Column 3 of the § 172.101 Table; and

(d) Fulfills the following additional requirements as applicable:

(1) For a material that meets the definition of a hazardous substance as defined in this subchapter, the shipping paper and package markings must conform to the provisions in § 172.203(c) and 172.324, respectively, of this subchapter.

(2) When a hazardous material, which is subject to the requirements of the ICAO Technical Instructions, is also a hazardous waste as defined in this subchapter:

(i) The word ''Waste'' must precede the proper shipping name on shipping papers and package markings; and

(ii) It must comply with § 172.205 with respect to the hazardous waste manifests.

(3) When a hazardous material is not subject to the requirements of the ICAO Technical Instructions, it must be transported as required by this subchapter.

(4) When a hazardous material that is regulated by this subchapter for transportation by highway is transported by motor vehicle on a public highway under the provisions of this section, the following requirements apply:

(i) The motor vehicle must be placarded in accordance with subpart F of part 172 of this subchapter; and

(ii) The shipping paper must include an indication that the shipment is being made under the provisions of this section or must include the letters ''ICAO.''

(5) If a liquid or solid material in a package meets the definition of a poison according to this subchapter, and the fact that it is a poison is not disclosed in the shipping name or by a class entry, an indication that the material is a poison shall be entered on the shipping paper in association with the basic description. For transportation by motor vehicle, this indication must be made by entering the word ''Poison or Toxic'' on the shipping paper in association with the basic description.

(6) For radioactive materials:

(i) Shipping papers for highway route controlled quantity radioactive materials shipments must meet the requirements of § 172.203(d)(4) of this subchapter,

(ii) Competent authority certification and any necessary revalidation for Type B, Type B(U), Type B(M), and fissile materials packages must be obtained from the appropriate authorities as specifed in §§ 173.471, 173.472 and 173.473 of this subchapter, and all requirements of the certificates and revalidations must be met,

(iii) Except for limited quantities of Class 7 (radioactive) material, the provisions of §§ 172.204(c)(4), 173.448(e), (f) and (g)(3) of this subchapter apply.

(iv) Limited quantities of radioactive materials must meet the provisions of § 173.421, § 173.424 or § 173.426 as appropriate of this subchapter, and

(v) Type A package contents shall be limited in accordance with § 173.431 of this subchapter.

(7) If a United States variation is indicated in the ICAO Technical Instructions for any provision governing the transport of the hazardous material, the hazardous material is transported in conformance with that variation.

(8) Abbreviations may not be used in shipping paper entries or package markings unless they are specifically authorized by this subchapter. ICAO class or division numbers are not considered to be abbreviations.

(9) When a hazardous material, which is subject to the requirements of the ICAO Technical Instructions, is a material poisonous by inhalation (see § 171.8 of this subchapter)—

(i) The shipping description must include the words ''Toxic Inhalation Hazard'' or ''Poison-Inhalation Hazard'' or ''Inhalation Hazard'', as required in § 172.203(m) of this subchapter;

(ii) The material must be packaged in accordance with the requirements of this subchapter; and

(iii) The package must be marked in accordance with § 172.313 of this subchapter and labeled with ''POISON'' or ''POISON GAS'', as appropriate, in accordance with subpart E of part 172 of this subchapter.

(10) Shipments of hazardous materials under this section must conform to the requirements for emergency response information as prescribed in subpart G of part 172 of this subchapter.

(11) Packages of Class 1 (explosive) materials must be marked in accordance with § 172.320 of this subchapter.

(12) If an ammonium nitrate fertilizer or ammonium nitrate mixed fertilizer, must not meet the definition and criteria of a Class 1 (explosive) material.

(13) Transportation of marine pollutants, as defined in § 171.8 of this subchapter, in bulk packagings must conform to the requirements of §§ 172.203(1) and 172.322 of this subchapter.

(14) An aerosol must meet the definition for ''Aerosol'' in § 171.8.

(15) An oxygen generator (chemical) must be classed, approved, and described in accordance with the requirements of this subchapter.

[Amdt. 171–69, 47 FR 54821, Dec. 6, 1982]

EDITORIAL NOTE: For FEDERAL REGISTER citations affecting § 171.11, see the List of CFR Sections Affected in the Finding Aids section of this volume.

EFFECTIVE DATE NOTE: By Amdt. 171–151, 62 FR 1227, Jan. 8, 1997, in § 171.11(d)(9)(iii),

the words ''with 'POISON'' were replaced with the words ''with 'POISON INHALATION HAZARD'', effective October 1, 1997. At 62 FR 39398, July 22, 1997, the effective date was delayed until October 1, 1998.

§171.12 Import and export shipments.

(a) *Importer's responsibility*. Except in the case of a shipment from Canada conforming to §171.12a of this subchapter, each person importing a hazardous material into the United States shall provide the shipper and the forwarding agent at the place of entry into the United States timely and complete information as to the requirements of this subchapter that will apply to the shipment of the material within the United States. The shipper, directly or through the forwarding agent at the place of entry, shall provide the initial carrier in the United States the certificate of compliance required by §172.204 of this subchapter. The carrier may not accept the material for transportation unless the required certification is provided.

(b) *IMDG Code*. The IMDG Code sets forth descriptions, classifications, packagings, labeling and vessel stowage requirements. Notwithstanding the provisions of this subchapter, a material which is packaged, marked, classed, labeled, placarded, described, stowed and segregated, and certified (including a container packing certification, if applicable) in accordance with the IMDG Code, and otherwise conforms to the requirements of this section, may be offered and accepted for transportation and transported within the United States. The following conditions and limitations apply:

(1) The provisions of this paragraph (b) apply only if all or part of the transportation is by vessel.

(2) A number of materials listed in the IMDG Code are not subject to the requirements of this subchapter. The provisions of this subchapter do not apply to materials listed in the IMDG Code which are not designated as hazardous materials under this subchapter. These materials may, however, be transported in the U.S. when described, marked and labeled in accordance with the IMDG Code. 0

(3) A material designated as a hazardous material under this subchapter which is not subject to the requirements of the IMDG Code may not be transported under the provisions of this section.

(4) A forbidden material or package according to §173.21 of this subchapter or Column 3 of the §172.101 Table may not be transported under the provisions of this section.

(5) Except for packagings conforming to the requirements of Section 26 of the General Introduction to the IMDG Code, bulk packagings must conform to the requirements of this subchapter.

(6) For export, packagings must conform to the applicable requirements in §§173.24, 173.24a and 173.28 of this subchapter.

(7) A Class 1 material must be classed and approved under the procedures in subpart C of part 173 of this subchapter and conform to the requirements of §172.320 and part 176 of this subchapter.

(8) When a hazardous material, which is subject to the requirements of the IMDG Code, is a material poisonous by inhalation (see §171.8 of this subchapter)—

(i) The shipping description must include the words 'Toxic Inhalation Hazard' or ''Poison-Inhalation Hazard'' or ''Inhalation Hazard'', as required in §172.203(m) of this subchapter;

(ii) The material must be packaged in accordance with the requirements of this subchapter; and

(iii) The package must be marked in accordance with §172.313 of this subchapter and labeled and placarded with ''POISON'' or ''POISON GAS'', as appropriate, in accordance with subparts E and F, respectively, of part 172 of this subchapter.

(9) Class 7 materials must conform to the provisions of paragraph (d) of this section.

(10) For a hazardous waste, as defined in this subchapter—

(i) The word ''Waste'' must precede the proper shipping name on shipping papers and packages; and

(ii) The requirements of §172.205 of this subchapter with respect to hazardous waste manifests are applicable.

(11) A hazardous substance as defined in this subchapter must conform to the requirements of §§172.203(c) and 172.324 of this subchapter.

(12) A poisonous material must conform to the requirements of § 172.203(m) of this subchapter.

(13) [Reserved].

(14) Any ammonium nitrate fertilizer or ammonium nitrate mixed fertilizer must not meet the definition and criteria of a Class 1 (explosive) material.

(15) Cylinders not manufactured to DOT specifications must conform to the requirements of § 173.301(i) and (j) of this subchapter.

(16) Shipments of hazardous materials under this section must conform to the requirements for emergency response information as prescribed in subpart G of part 172 of this subchapter.

(17) An aerosol must meet the definition for ''Aerosol'' in § 171.8.

(18) An oxygen generator (chemical) must be classed, approved, and described in accordance with the requirements of this subchapter.

(c) *Use of IMDG Code in port areas.* Section 171.2 notwithstanding, a hazardous material (other than Division 1.1 or 1.2 or Class 7) being imported into or exported from the United States or passing through the United States in the course of being shipped between places outside the United States may be offered and accepted for transportation and transported by motor vehicle within a single port area (including contiguous harbors) when packaged, marked, classed, labeled, stowed and segregated in accordance with the IMDG Code, if the hazardous material is offered and accepted in accordance with the requirements of subparts C and F of part 172 of this subchapter pertaining to shipping papers and placarding and otherwise conforms to the applicable requirements of part 176 of this subchapter. The requirement in § 172.201(d) of this subchapter for an emergency telephone number does not apply to shipments made in accordance with the IMDG Code if the hazardous material:

(1) Is not offloaded from the vessel;

(2) Is offloaded between ocean vessels at a U.S. port facility without being transported by public highway.

(d) *Use of IAEA regulations for Class 7 (radioactive) materials.* Class 7 (radioactive) materials being imported into, or exported from, the United States, or passing through the United States in the course of being shipped between places outside the United States, may be offered and accepted for transportation when packaged, marked, labeled, and otherwise prepared for shipment in accordance with IAEA ''Regulations for the Safe Transport of Radioactive Materials, Safety Series No. 6,'' if:

(1) Highway route controlled quantities (see § 173.403 of this subchapter) are shipped in accordance with §§ 172.203(d)(4), 172.507 and 173.22(c) of this subchapter;

(2) For fissile materials and Type B packages, the competent authority certification and any necessary revalidation is obtained from the appropriate competent authorities as specified in §§ 173.471, 173.472 and 173.473 of this subchapter and all requirements of the certificates and revalidations are met;

(3) Type A package contents are limited in accordance with § 173.431 of this subchapter;

(4) The country of origin for the shipment has adopted the IAEA ''Regulations for the Safe Transport of Radioactive Materials, Safety Series No. 6'';

(5) The requirements of §§ 173.448(e), 173.448(f), and 173.448(g)(3) of this subchapter are fulfilled, when applicable; and

(6) Shipments comply with the requirements for emergency response information prescribed in Subpart G of Part 172 of this subchapter.

[Amdt. 171–111, 55 FR 52472, Dec. 21, 1990]

EDITORIAL NOTE: For FEDERAL REGISTER citations affecting § 171.12, see the List of CFR Sections Affected in the Finding Aids section of this volume.

EFFECTIVE DATE NOTE: By Amdt. 171–151, 62 FR 1227, Jan. 8, 1997, in § 171.12(b)(8)(iii), the words ''with 'POISON'\'' were replaced with the words ''with 'POISON INHALATION HAZARD'\'', effective October 1, 1997. At 62 FR 39398, July 22, 1997 the effective date was delayed until October 1, 1998.

§ 171.12a Canadian shipments and packagings.

(a) *Scope and applicability.* This section sets forth provisions for the transportation by rail or highway of shipments of hazardous materials which

conform to the regulations of the Government of Canada but which may differ from the requirements of this subchapter with regard to hazard communication, classification or packaging. The provisions apply only to shipments which originate in Canada and either terminate in the U.S. or transit the U.S. to a Canadian or foreign destination, and to the return to Canada of empty bulk packages containing residues of hazardous materials which originally were imported into the U.S. Reciprocal provisions, applicable to exports from the U.S., appear in the regulations of the Government of Canada.

(b) *Conditions and limitations.* Notwithstanding the requirements of parts 172, 173, and 178 of this subchapter, and subject to the limitations of paragraph (a) of this section, a hazardous material that is classed, marked, labeled, placarded, described on a shipping paper, and packaged in accordance with the Transportion of Dangerous Goods (TDG) Regulations issued by the Government of Canada may be offered for transportation and transported to or through the United States by motor vehicle or rail car. Copies of the TDG Regulations may be obtained from the Canadian Government Publishing Centre, Ottawa, Ontario K1A 059; Telephone (819) 956–4800. The following conditions and limitations apply:

(1) A number of materials listed in the TDG Regulations may not be subject to the requirements of this subchapter. The provisions of this subchapter do not apply to materials listed in the TDG Regulations which are not designated as hazardous materials under this subchapter. These materials may, however, be transported in the U.S. when described, marked and labeled in accordance with the TDG Regulations.

(2) A material designated as a hazardous material under this subchapter which is not subject to the requirements of the TDG Regulations may not be transported under the provisions of this section.

(3) A forbidden material or package according to §173.21 of this subchapter or Column 3 of the §172.101 table may not be transported under the provisions of this section.

(4) A Class 1 material must be classed and approved under the procedures in subpart C of part 173 of this subchapter, and packages of Class 1 materials must be marked in accordance with §172.320 of this subchapter.

(5) When a hazardous material, which is a material poisonous by inhalation under the provisions of this subchapter (see §171.8 of this subchapter), is subject to the requirements of the TDG Regulations—

(i) The shipping description must include the words 'Toxic Inhalation Hazard' or 'Poison Inhalation Hazard' or ''Inhalation Hazard'', as required in §172.203(m) of this subchapter;

(ii) The material must be packaged in accordance with the requirements of this subchapter; and

(iii) The package must be marked in accordance with §172.313 of this subchapter. Except for a package containing anhydrous ammonia, the package must be labeled and placarded with ''POISON'' or ''POISON GAS'', as appropriate, in accordance with subparts E and F, respectively, of part 172 of this subchapter. For shipments of anhydrous ammonia, the shipping paper must contain an indication that the markings, labels and placards have been applied in conformance with the TDG Regulations and this paragraph (b)(5).

(6) Required shipping descriptions and package markings must be in English. Abbreviations may not be used unless specifically authorized by this subchapter. Identification numbers must be preceded by ''UN'' or ''NA''. The use of an identification number preceded by ''PIN'' is not authorized.

(7) Shipments must conform to the requirements for emergency response information in subpart G of part 172 of this subchapter.

(8) A Class 7 material must conform to the provisions of §171.12(d) of this subchapter;

(9) For a hazardous waste as defined in this subchapter—

(i) The word ''Waste'' must precede the proper shipping name on shipping papers and packages; and

(ii) The requirements of §172.205 of this subchapter with respect to hazardous waste manifests are applicable;

(10) A hazardous substance as defined in this subchapter must conform to the requirements of §§ 172.203(c) and 172.324 of this subchapter; and

(11) A poisonous material must conform to the requirements of § 172.203(m) of this subchapter.

(12) [Reserved].

(13) When the provisions of this subchapter require that a DOT specification or UN standard packaging must be used for a hazardous material, a packaging authorized by the TDG Regulations may be used only if it corresponds to the DOT specification or UN packaging authorized by this subchapter. Cylinders not manufactured to DOT specifications must conform to the requirements of § 173.301(i) and (j) of this subchapter.

(14) Any ammonium nitrate fertilizer or ammonium nitrate mixed fertilizer must not meet the definition and criteria of a Class 1 (explosive) material.

(15) Transportation of marine pollutants, as defined in § 171.8 of this subchapter, must conform to the requirements of §§ 172.203(l) and 172.322 of this subchapter.

(16) An aerosol must meet the definition for ''Aerosol'' in § 171.8.

(17) An oxygen generator (chemical) must be classed, approved, and described in accordance with the requirements of this subchapter.

[Amdt. 171–111, 55 FR 52473, Dec. 21, 1990, as amended at 56 FR 66160, Dec. 20, 1991; 57 FR 45453, Oct. 1, 1992; Amdt. 171–116, 57 FR 52935, Nov. 5, 1992; Amdt. 171–153, 62 FR 24700, May 6, 1997; 62 FR 30770, June 5, 1997]

EFFECTIVE DATE NOTE: By Amdt. 171–151, 62 FR 1227, Jan. 8, 1997, in § 171.12(b)(5)(iii), the words ''with 'POISON' '' were replaced with the words ''with 'POISON INHALATION HAZARD' '', effective October 1, 1997. At 62 FR 39398, July 22, 1997 the effective date was delayed until October 1, 1998.

§ 171.14 Transitional provisions for implementing requirements based on the UN Recommendations.

General. The purpose of the provisions of this section is to provide an orderly transition to new requirements based on the UN Recommendations, so as to minimize any burdens associated with them. Subsequent final rules may implement different time requirements than the transitional provisions in this section. When the effective date section or regulatory text of a final rule imposes a compliance date earlier or later than that which would be required under this section, the transition date in this section does not apply.

(a) *Previously filled packages*—(1) *Packages filled prior to October 1, 1991.* Notwithstanding the marking and labeling provisions of subparts D and E, respectively, of part 172, and the packaging provisions of part 173 and subpart B of Part 172 of this subchapter, a package may be offered for transportation and transported prior to October 1, 2001, if it—

(i) Conforms to the old requirements of this subchapter in effect on September 30, 1991;

(ii) Was filled with a hazardous material prior to October 1, 1991;

(iii) Is marked ''Inhalation Hazard'' if appropriate, in accordance with § 172.313 of this subchapter or Special Provision 13, as assigned in the § 172.101 Table; and

(iv) Is not emptied and refilled on or after October 1, 1991.

(2) *Non-bulk packages filled prior to October 1, 1996.* Notwithstanding the packaging provisions of subpart B of Part 172 and the packaging provisions of part 173 of this subchapter with respect to UN standard packagings, a non-bulk package other than a cylinder may be offered for transportation and transported domestically prior to October 1, 1999, if it—

(i) Conforms to the requirements of this subchapter in effect on September 30, 1996;

(ii) Was filled with a hazardous material prior to October 1, 1996; and

(iii) Is not emptied and refilled on or after October 1, 1996.

(b) *Transitional placarding provisions.* Until October 1, 2001, placards which conform to specifications for placards in effect on September 30, 1991 or placards specified in the December 21, 1990 final rule may be used, for highway transportation only, in place of the placards specified in Subpart F of Part 172 of this subchapter, in accordance with the following table:

PLACARD SUBSTITUTION TABLE

Hazard class or division number	Current placard name	Old (Sept. 30, 1991) placard name
Division 1.1	Explosives 1.1	Explosives A.
Division 1.2	Explosives 1.2	Explosives A.
Division 1.3	Explosives 1.3	Explosives B.
Division 1.4	Explosives 1.4	Dangerous.
Division 1.5	Explosives 1.5	Blasting agents.
Division 1.6	Explosives 1.6	Dangerous.
Division 2.1	Flammable gas	Flammable gas.
Division 2.2	Nonflammable gas	Nonflammable gas.
Division 2.3	Poison gas	Poison gas.
Class 3	Flammable	Flammable.
Combustible liquid	Combustible	Combustible.
Division 4.1	Flammable solid	Flammable solid.
Division 4.2	Spontaneously combustible.	Flammable solid.
Division 4.3	Dangerous when wet.	Flammable solid W.
Division 5.1	Oxidizer	Oxidizer.
Division 5.2	Organic peroxide	Organic peroxide.
Division 6.1, PG I and II.	Poison	Poison.
Division 6.1, PG III	Keep away from food.	(none required).
Class 7	Radioactive	Radioactive.
Class 8	Corrosive	Corrosive.
Class 9	Class 9	(none required).

(c) *Non-specification fiber drums.* (1) A non-specification fiber drum with a removable head is authorized for a liquid hazardous material in Packing Group III that is not poisonous by inhalation for which the packaging was authorized under the requirements of Part 172 or Part 173 of this subchapter in effect on September 30, 1991. This authorization expires on the later of September 30, 1997, or the date on which funds are authorized to be appropriated to carry out chapter 51 of title 49, United States Code (related to transportation of hazardous materials), for fiscal years beginning after September 30, 1997. Information concerning this funding authorization date may be obtained by contacting the Office of the Associate Administrator for Hazardous Materials Safety.

(2) A non-specification fiber drum with a removable head authorized by paragraph (c)(1) of this section may be offered for transportation and transported domestically prior to October 1, 1999, if it—

(i) Was filled with an authorized hazardous material prior to the expiration of the authority in paragraph (c)(1) of this section; and

(ii) Is not emptied and refilled after the expiration of the authority in paragraph (c)(1) of this section.

(d) A rule published in the FEDERAL REGISTER on May 6, 1997, effective October 1, 1997, resulted in revisions to this subchapter. During the transition period provided in paragraph (d)(1) of this section, a person may elect to comply with either the applicable requirements of this subchapter in effect on September 30, 1997, or the requirements of this subchapter in the May 6, 1997 final rule, in effect on October 1, 1997.

(1) *Transition date.* On October 1, 1998, all applicable regulatory requirements adopted in the May 6, 1997 final rule in effect on October 1, 1997 must be met.

(2) *Intermixing old and new requirements.* Prior to the transition date in paragraph (d)(1) of this section, it is recommended that the hazard communication requirements be consistent where practicable, *i.e.*, marking, labeling, placarding, and shipping paper descriptions should conform to either the old requirements of this subchapter in effect on September 30, 1997, or new requirements of this subchapter in the May 6, 1997 rule, in effect on October 1, 1997, without intermixing of communication elements. However, intermixing is permitted, during the applicable transition period, for packaging, hazard communication, and handling provisions, as follows:

(i) If either shipping names or identification numbers are identical, a shipping paper may display the old shipping description even if the package is marked and labeled under the new shipping description;

(ii) If either shipping names or identification numbers are identical, a shipping paper may display the new shipping description even if the package is marked and labeled under the old shipping description; and

(iii) Either old or new placards may be used regardless of whether old or new shipping descriptions and package markings are used.

(e) Notwithstanding §§172.416 and 172.429 of this subchapter specified in the July 22, 1997 final rule, when labels are required by subpart E of part 172 of this subchapter to be affixed to a material poisonous by inhalation, labels that conform to the requirements of this subchapter in effect on September

30, 1997, may be used on packagings offered for transportation or transported until October 1, 1999.

[Amdt. 171–131, 59 FR 67406, Dec. 29, 1994, as amended by Amdt. 171–132, 60 FR 26799, 26800, May 18, 1995; Amdt. 171–138, 60 FR 48786, Sept. 20, 1995; Amdt. 171–139, 61 FR 7958, Feb. 29, 1996; Amdt. 171–150, 62 FR 1227, Jan. 8, 1997; Amdt 171–153, 62 FR 24700, May 6, 1997; 62 FR 29676, June 2, 1997; 62 FR 39404, July 22, 1997]

EFFECTIVE DATE NOTE: At 62 FR 39404, July 22, 1997, in § 171.14, the section heading, introductory text and paragraph (b) were revised, and a new paragraph (e) was added, effective October 1, 1998. For the convenience of the user, the revised text is set forth as follows:

§ 171.14 Transitional provisions for implementing certain requirements.

General. The purpose of the provisions of this section is to provide an orderly transition to certain new requirements so as to minimize any burdens associated with them.

* * * * *

(b) *Transitional placarding provisions.* Until October 1, 2001, placards which conform to specifications for placards in effect on September 30, 1991, or placards specified in the December 21, 1990 final rule may be used, for highway transportation only, in place of the placards specified in subpart F of part 172 of this subchapter, in accordance with the following table:

PLACARD SUBSTITUTION TABLE

Hazard class or division No.	Current placard name	Old (Sept. 30, 1991) placard name
Division 1.1	Explosives 1.1	Explosives A.
Division 1.2	Explosives 1.2	Explosives A.
Division 1.3	Explosives 1.3	Explosives B.
Division 1.4	Explosives 1.4	Dangerous.
Division 1.5	Explosives 1.5	Blasting agents.
Division 1.6	Explosives 1.6	Dangerous.
Division 2.1	Flammable gas	Flammable gas.
Division 2.2	Nonflammable gas	Nonflammable gas.
Division 2.3[1]	Poison gas	Poison gas.
Class 3	Flammable	Flammable.
Combustible liquid	Combustible	Combustible.
Division 4.1	Flammable solid	Flammable solid.
Division 4.2	Spontaneously combustible	Flammable solid.
Division 4.3	Dangerous when wet	Flammable solid W.
Division 5.1	Oxidizer	Oxidizer.
Division 5.2	Organic peroxide	Organic peroxide.
Division 6.1, (inhalation hazard, Zone A or B)[1]	Poison inhalation hazard	Poison.
Division 6.1, PG I and II (other than Zone A or B inhalation hazard).	Posion	Poison.
Division 6.1, PG III	Keep away from food	(none required).
Class 7	Radioactive	Radioactive.
Class 8	Corrosive	Corrosive.
Class 9	Class 9	(none required).

[1] For materials poisonous by inhalation, by all modes of transportation, until October 1, 2001, placards may be used that conform to specifications for placards (1) in effect on September 30, 1991, (2) specified in the December 21, 1990 final rule, or (3) specified in the July 22, 1997 final rule.

* * * * *

§ 171.15 Immediate notice of certain hazardous materials incidents.

(a) At the earliest practicable moment, each carrier who transports hazardous materials (including hazardous wastes) shall give notice in accordance with paragraph (b) of this section after each incident that occurs during the course of transportation (including loading, unloading and temporary storage) in which—

(1) As a direct result of hazardous materials—

(i) A person is killed; or

(ii) A person receives injuries requiring his or her hospitalization; or

(iii) Estimated carrier or other property damage exceeds $50,000; or

(iv) An evacuation of the general public occurs lasting one or more hours; or

(v) One or more major transportation arteries or facilities are closed or shut down for one hour or more; or

(vi) The operational flight pattern or routine of an aircraft is altered; or

(2) Fire, breakage, spillage, or suspected radioactive contamination occurs involving shipment of radioactive material (see also §§174.45, 176.48, and 177.807 of this subchapter); or

(3) Fire, breakage, spillage, or suspected contamination occurs involving shipment of infectious substances (etiologic agents); or

(4) There has been a release of a marine pollutant in a quantity exceeding 450 L (119 gallons) for liquids or 400 kg (882 pounds) for solids; or

(5) A situation exists of such a nature (e.g., a continuing danger to life exists at the scene of the incident) that, in the judgment of the carrier, it should be reported to the Department even though it does not meet the criteria of paragraph (a) (1), (2) or (3) of this section.

(b) Except for transportation by aircraft, each notice required by paragraph (a) of this section shall be given to the Department by telephone (toll-free) on 800–424–8802. Notice involving shipments transported by aircraft must be given to the nearest FAA Civil Aviation Security Office by telephone at the earliest practical moment after each incident in place of the notice to the Department. Notice involving etiologic agents may be given to the Director, Centers for Disease Control, U.S. Public Health Service, Atlanta, Ga. (800) 232–0124, in place of the notice to the Department or (toll call) on 202–267–2675. Each notice must include the following information:

(1) Name of reporter.

(2) Name and address of carrier represented by reporter.

(3) Phone number where reporter can be contacted.

(4) Date, time, and location of incident.

(5) The extent of injuries, if any.

(6) Classification, name, and quantity of hazardous materials involved, if such information is available.

(7) Type of incident and nature of hazardous material involvement and whether a continuing danger to life exists at the scene.

(c) Each carrier making a report under this section shall also make the report required by §171.16.

NOTE: Under 40 CFR 302.6 EPA requires persons in charge of facilities (including transport vehicles, vessels and aircraft) to report any release of a hazardous substance in a quantity equal to or greater than its reportable quantity, as soon as that person has knowledge of the release, to the U.S. Coast Guard National Response Center at (toll free) 800–424–8802 or (toll) 202–267–2675.

[Amdt. 171–7, 35 FR 16837, Oct. 3, 1970]

EDITORIAL NOTE: For FEDERAL REGISTER citations affecting §171.15, see the List of CFR Sections Affected appearing in the Finding Aids section of this volume.

§171.16 Detailed hazardous materials incident reports.

(a) Each carrier who transports hazardous materials shall report in writing, in duplicate, on DOT Form F 5800.1 (Rev. 6/89) to the Department within 30 days of the date of discovery, each incident that occurs during the course of transportation (including loading, unloading, and temporary storage) in which any of the circumstances set forth in §171.15(a) occurs or there has been an unintentional release of hazardous materials from a package (including a tank) or any quantity of hazardous waste has been discharged during transportation. If a report pertains to a hazardous waste discharge:

(1) A copy of the hazardous waste manifest for the waste must be attached to the report; and

(2) An estimate of the quantity of the waste removed from the scene, the name and address of the facility to which it was taken, and the manner of disposition of any removed waste must be entered in Section IX of the report form (Form F 5800.1) (Rev. 6/89).

(b) Each carrier making a report under this section shall send the report to the Information Systems Manager, DHM–63, Research and Special Programs Administration, Department of Transportation, Washington, DC 20590–0001; and, for incidents involving transportation by aircraft, a copy of the report shall also be sent to the FAA Civil Aviation Security Office nearest the location of the incident. A copy of the report shall be retained for a period of two years, at the carrier's principal place of business, or at other places as authorized and approved in writing by an agency of the Department of Transportation.

(c) Except as provided in paragraph (d) of this section, the requirements of paragraph (a) of this section do not apply to incidents involving the unintentional release of a hazardous material—

(1) Transported under one of the following proper shipping names:

(i) Consumer commodity.

(ii) Battery, *electric storage,* wet, filled with acid *or* alkali.

(iii) Paint and paint related material when shipped in a packaging of five gallons or less.

(2) Prepared and transported as a limited quantity shipment in accordance with this subchapter.

(d) The exceptions to incident reporting provided in paragraph (c) of this section do not apply to:

(1) Incidents required to be reported under § 171.15(a);

(2) Incidents involving transportation aboard aircraft;

(3) Except for consumer commodities, materials in Packing Group I; or

(4) Incidents involving the transportation of hazardous waste.

NOTE: A guideline document for assisting in the completion of DOT Form F 5800.1 (Rev. 6/89) may be obtained from the Office of Hazardous Materials Transportation, DHM–51, U.S. Department of Transportation, Washington, DC 20590–0001.

[Amdt. 171–7, 35 FR 16837, Oct. 3, 1970, as amended by Amdt. 171–56, 45 FR 73683, Nov. 6, 1980; Amdt. No. 171–65, 47 FR 24584, June 7, 1982; Amdt. 171–72, 48 FR 17095, Apr. 21, 1983; Amdt. 171–101, 54 FR 25813, June 19, 1989; Amdt. 171–109, 55 FR 39978, Oct. 1, 1990; Amdt. 171–140, 61 FR 18932, Apr. 29, 1996; Amdt. 171–145, 61 FR 27172, May 30, 1996]

§ 171.17 [Reserved]

§ 171.18 Continuation of effectiveness of existing Bureau of Explosives registrations.

A registration filed with the Bureau of Explosives in compliance with a requirement of the subchapter, which is valid at the time that registration function is assumed by RSPA remains valid to the same extent as if it had been filed originally with RSPA.

[Amdt. 171–50, 44 FR 55577, Sept. 27, 1979]

§ 171.19 Approvals or authorizations issued by the Bureau of Explosives.

Unless otherwise specifically restricted by other requirements of this subchapter, any written approval or authorization issued by the Bureau of Explosives that is valid at the time the Bureau of Explosives authority to issue that approval or authorization is withdrawn or assumed by the Associate Administrator for Hazardous Materials Safety and which is available for inspection by representatives of the Department of Transportation, will be considered as having the same validity as if issued by the Associate Administrator for Hazardous Materials Safety, and remains valid under the conditions and for the period established by the Bureau of Explosives.

[Amdt. 171–70, 48 FR 2655, Jan. 20, 1983, as amended by Amdt. 171–111, 56 FR 66162, Dec. 20, 1991]

§ 171.20 Submission of Examination Reports.

(a) When it is required in this subchapter that the issuance of an approval by the Associate Administrator for Hazardous Materials Safety be based on an examination by the Bureau of Explosives (or any other test facility recognized by RSPA), it is the responsibility of the applicant to submit the results of the examination to the Associate Administrator for Hazardous Materials Safety.

(b) Applications for approval submitted under paragraph (a) of this section, must be submitted to the Associate Administrator for Hazardous Materials Safety, Research and Special Programs Administration, Washington, DC 20590–0001.

(c) Any applicant for an approval aggrieved by an action taken by the Associate Administrator for Hazardous Materials Safety, under this subpart may file an appeal with the Administrator, RSPA within 30 days of service of notification of a denial.

[Amdt. 171–54, 45 FR 32692, May 19, 1980, as amended by Amdt. 171–66, 47 FR 43064, Sept. 30, 1982; Amdt. 171–109, 55 FR 39978, Oct. 1, 1990; Amdt. 171–111, 56 FR 66162, Dec. 20, 1991]

§ 171.21 Assistance in investigations and special studies.

(a) A carrier who is responsible for reporting an incident under the provisions of § 171.16 shall make all records and information pertaining to the incident available to an authorized representative or special agent of the Department of Transportation upon request. The carrier shall give an authorized representative or special agent of the Department of Transportation reasonable assistance in the investigation of the incident.

(b) If the Department of Transportation makes an inquiry to a carrier of hazardous materials in connection with a study of incidents, the carrier shall—

(1) Respond to the inquiry within 30 days after its receipt or within such other time as the inquiry may specify; and

(2) Provide full, true, and correct answers to any questions included in the inquiry.

[Amdt. 171–101, 54 FR 25813, June 19, 1989]

PART 172—HAZARDOUS MATERIALS TABLE, SPECIAL PROVISIONS, HAZARDOUS MATERIALS COMMUNICATIONS, EMERGENCY RESPONSE INFORMATION, AND TRAINING REQUIREMENTS

Subpart A—General

Sec.

172.1 Purpose and scope.
172.3 Applicability.

Subpart B—Table of Hazardous Materials and Special Provisions

172.101 Purpose and use of hazardous materials table.
172.102 Special provisions.

Subpart C—Shipping Papers

172.200 Applicability.
172.201 General entries.
172.202 Description of hazardous material on shipping papers.
172.203 Additional description requirements.
172.204 Shipper's certification.
172.205 Hazardous waste manifest.

Subpart D—Marking

172.300 Applicability.
172.301 General marking requirements for non-bulk packagings.
172.302 General marking requirements for bulk packagings.
172.303 Prohibited marking.
172.304 Marking requirements.
172.306 [Reserved]
172.308 Authorized abbreviations.
172.310 Class 7 (radioactive) materials.
172.312 Liquid hazardous materials in non-bulk packagings.
172.313 Poisonous hazardous materials.
172.316 Packagings containing materials classed as ORM–D.
172.320 Explosive hazardous materials.
172.322 Marine pollutants.
172.324 Hazardous substances in non-bulk packagings.
172.325 Elevated temperature materials.
172.326 Portable tanks.
172.328 Cargo tanks.
172.330 Tank cars and multi-unit tank car tanks.
172.331 Bulk packagings other than portable tanks, cargo tanks, tank cars and multi-unit tank car tanks.
172.332 Identification number markings.
172.334 Identification numbers; prohibited display.
172.336 Identification numbers; special provisions.
172.338 Replacement of identification numbers.

Subpart E—Labeling

172.400 General labeling requirements.
172.400a Exceptions from labeling.
172.401 Prohibited labeling.
172.402 Additional labeling requirements.
172.403 Class 7 (radioactive) material.
172.404 Labels for mixed and consolidated packaging.
172.405 Authorized label modifications. 0
172.406 Placement of labels.
172.407 Label specifications.
172.411 EXPLOSIVE 1.1, 1.2, 1.3, 1.4, 1.5 and 1.6 labels, and EXPLOSIVE Subsidiary label.
172.415 NON-FLAMMABLE GAS label.
172.416 POISON GAS label.
172.417 FLAMMABLE GAS label.
172.419 FLAMMABLE LIQUID label.
172.420 FLAMMABLE SOLID label.
172.422 SPONTANEOUSLY COMBUSTIBLE label.
172.423 DANGEROUS WHEN WET label.
172.426 OXIDIZER label.
172.427 ORGANIC PEROXIDE label.
172.429 POISON INHALATION HAZARD label.
172.430 POISON label.
172.431 KEEP AWAY FROM FOOD label.
172.432 INFECTIOUS SUBSTANCE label.
172.436 RADIOACTIVE WHITE-I label.
172.438 RADIOACTIVE YELLOW-II label.
172.440 RADIOACTIVE YELLOW-III label.
172.442 CORROSIVE label.
172.444 [Reserved]

172.446 CLASS 9 label.
172.448 CARGO AIRCRAFT ONLY label.
172.450 EMPTY label.

Subpart F—Placarding

172.500 Applicability of placarding requirements.
172.502 Prohibited and permissive placarding.
172.503 Identification number display on placards.
172.504 General placarding requirements.
172.505 Placarding for subsidiary hazards.
172.506 Providing and affixing placards: Highway.
172.507 Special placarding provisions: Highway.
172.508 Placarding and affixing placarding: Rail.
172.510 Special placarding provisions: Rail.
172.512 Freight containers and aircraft unit load devices.
172.514 Bulk packagings.
172.516 Visibility and display of placards.
172.519 General specifications for placards.
172.521 DANGEROUS placard.
172.522 EXPLOSIVES 1.1, EXPLOSIVES 1.2 and EXPLOSIVES 1.3 placards.
172.523 EXPLOSIVES 1.4 placard.
172.524 EXPLOSIVES 1.5 placard.
172.525 EXPLOSIVES 1.6 placard.
172.526 [Reserved]
172.527 Background requirements for certain placards.
172.528 NON-FLAMMABLE GAS placard.
172.530 OXYGEN placard.
172.532 FLAMMABLE GAS placard.
172.536 [Reserved]
172.540 POISON GAS placard.
172.542 FLAMMABLE placard.
172.544 COMBUSTIBLE placard.
172.546 FLAMMABLE SOLID placard.
172.547 SPONTANEOUSLY COMBUSTIBLE placard.
172.548 DANGEROUS WHEN WET placard.
172.550 OXIDIZER placard.
172.552 ORGANIC PEROXIDE placard.
172.553 KEEP AWAY FROM FOOD placard.
172.554 POISON placard.
172.555 POISON INHALATION HAZARD placard.
172.556 RADIOACTIVE placard.
172.558 CORROSIVE placard.
172.560 CLASS 9 placard.

Subpart G—Emergency Response Information

172.600 Applicability and general requirements.
172.602 Emergency response information.
172.604 Emergency response telephone number.
172.606 Carrier information contact.

Subpart H—Training

172.700 Purpose and scope.
172.701 Federal-State relationship.
172.702 Applicability and responsibility for training and testing.
172.704 Training requirements.

APPENDIX A TO PART 172—OFFICE OF HAZARDOUS MATERIALS TRANSPORTATION COLOR TOLERANCE CHARTS AND TABLES
APPENDIX B TO PART 172—TREFOIL SYMBOL
APPENDIX C TO PART 172—DIMENSIONAL SPECIFICATIONS FOR RECOMMENDED PLACARD HOLDER

AUTHORITY: 49 U.S.C. 5101–5127; 49 CFR 1.53.

SOURCE: Amdt. 172–29, 41 FR 15996, Apr. 15, 1976, unless otherwise noted.

Subpart A—General

§ 172.1 Purpose and scope.

This part lists and classifies those materials which the Department of Transportation has designated as hazardous materials for purposes of transportation and prescribes the requirements for shipping papers, package marking, labeling, and transport vehicle placarding applicable to the shipment and transportation of those hazardous materials.

[Amdt. 172–29, 41 FR 15997, Apr. 15, 1976]

§ 172.3 Applicability.

(a) This part applies to—(1) Each person who offers a hazardous material for transportation, and

(2) Each carrier by air, highway, rail, or water who transports a hazardous material.

(b) When a person, other than one of those provided for in paragraph (a) of this section, performs a packaging labeling or marking function required by this part, that person shall perform the function in accordance with this part.

[Amdt. 172–29, 41 FR 15996, Apr. 15, 1976, as amended by Amdt. 172–32, 41 FR 38179, Sept. 9, 1976]

Subpart B—Table of Hazardous Materials and Special Provisions

§ 172.101 Purpose and use of hazardous materials table.

(a) The Hazardous Materials Table (Table) in this section designates the materials listed therein as hazardous

materials for the purpose of transportation of those materials. For each listed material, the Table identifies the hazard class or specifies that the material is forbidden in transportation, and gives the proper shipping name or directs the user to the preferred proper shipping name. In addition, the Table specifies or references requirements in this subchapter pertaining to labeling, packaging, quantity limits aboard aircraft and stowage of hazardous materials aboard vessels.

(b) *Column 1: Symbols.* Column 1 of the Table contains five symbols (''+'', ''A'', ''D'', ''I'', and ''W''), as follows:

(1) The plus (+) fixes the proper shipping name, hazard class and packing group for that entry without regard to whether the material meets the definition of that class or packing group or meets any other hazard class definition. An appropriate alternate proper shipping name and hazard class may be authorized by the Associate Administrator for Hazardous Materials Safety.

(2) The letter ''A'' restricts the application of requirements of this subchapter to materials offered or intended for transportation by aircraft, unless the material is a hazardous substance or a hazardous waste.

(3) The letter ''D'' identifies proper shipping names which are appropriate for describing materials for domestic transportation but may be inappropriate for international transportation under the provisions of international regulations (e.g., IMO, ICAO). An alternate proper shipping name may be selected when either domestic or international transportation is involved.

(4) The letter ''I'' identifies proper shipping names which are appropriate for describing materials in international transportation. An alternate proper shipping name may be selected when only domestic transportation is involved.

(5) The letter ''W'' restricts the application of requirements of this subchapter to materials offered or intended for transportation by vessel, unless the material is a hazardous substance or a hazardous waste.

(c) *Column 2: Hazardous materials descriptions and proper shipping names.* Column 2 lists the hazardous materials descriptions and proper shipping names of materials designated as hazardous materials. Modification of a proper shipping name may otherwise be required or authorized by this section. Proper shipping names are limited to those shown in Roman type (not italics).

(1) Proper shipping names may be used in the singular or plural and in either capital or lower case letters. Words may be alternatively spelled in the same manner as they appear in the ICAO Technical Instructions or the IMDG Code. For example ''aluminum'' may be spelled ''aluminium'' and ''sulfur'' may be spelled ''sulphur''. However, the word ''inflammable'' may not be used in place of the word ''flammable''.

(2) Punctuation marks and words in italics are not part of the proper shipping name, but may be used in addition to the proper shipping name. The word ''or'' in italics indicates that terms in the sequence may be used as the proper shipping name, as appropriate.

(3) The word ''poison'' or ''poisonous'' may be used interchangeably with the word ''toxic'' when only domestic transportation is involved. The abbreviation ''n.o.i.'' or ''n.o.i.b.n.'' may be used interchangeably with ''n.o.s.''.

(4) Except for hazardous wastes, when qualifying words are used as part of the proper shipping name, their sequence in the package markings and shipping paper description is optional. However, the entry in the Table reflects the preferred sequence.

(5) When one entry references another entry by use of the word ''see'', if both names are in Roman type, either name may be used as the proper shipping name (e.g., Ethyl alcohol, *see* Ethanol).

(6) When a proper shipping name includes a concentration range as part of the shipping description, the actual concentration, if it is within the range stated, may be used in place of the concentration range. For example, an aqueous solution of hydrogen peroxide containing 30 percent peroxide may be described as ''Hydrogen peroxide, aqueous solution *with not less than 20 percent but not more than 40 percent hydrogen peroxide*'' or ''Hydrogen peroxide, aqueous solution *with 30 percent hydrogen peroxide*''.

(7) Use of the prefix ''mono'' is optional in any shipping name, when appropriate. Thus, Iodine monochloride may be used interchangeably with Iodine chloride. In ''Glycerol alpha-monochlorohydrin'' the term ''mono'' is considered a prefix to the term ''chlorohydrin'' and may be deleted.

(8) *Hazardous substances.* Appendix A to this section lists materials which are listed or designated as hazardous substances under section 101(14) of the Comprehensive Environmental Response, Compensation, and Liability Act (CERCLA). Proper shipping names for hazardous substances (see Appendix A to this section and § 171.8 of this subchapter) shall be determined as follows:

(i) If the hazardous substance appears in the Table by technical name, then the technical name is the proper shipping name.

(ii) If the hazardous substance does not appear in the Table and is not a forbidden material, then an appropriate generic, or ''n.o.s.'', shipping name shall be selected corresponding to the hazard class (and packing group, if any) of the material as determined by the defining criteria of this subchapter (see §§ 173.2 and 173.2a of this subchapter). For example, a hazardous substance which is listed in Appendix A but not in the Table and which meets the definition of a flammable liquid might be described as ''Flammable liquid, n.o.s.'' or other appropriate shipping name corresponding to the flammable liquid hazard class.

(9) *Hazardous wastes.* If the word ''waste'' is not included in the hazardous material description in Column 2 of the Table, the proper shipping name for a hazardous waste (as defined in § 171.8 of this subchapter), shall include the word ''Waste'' preceding the proper shipping name of the material. For example: Waste acetone.

(10) *Mixtures and solutions.* (i) A mixture or solution not identified specifically by name, comprised of a hazardous material identified in the Table by technical name and non-hazardous material, shall be described using the proper shipping name of the hazardous material and the qualifying word ''mixture'' or ''solution'', as appropriate, unless—

(A) Except as provided in § 172.101(i)(4) the packaging specified in Column 8 is inappropriate to the physical state of the material;

(B) The shipping description indicates that the proper shipping name applies only to the pure or technically pure hazardous material;

(C) The hazard class, packing group, or subsidiary hazard of the mixture or solution is different from that specified for the entry;

(D) There is a significant change in the measures to be taken in emergencies;

(E) The material is identified by special provision in Column 7 of the § 172.101 Table as a material poisonous by inhalation; however, it no longer meets the definition of poisonous by inhalation or it falls within a different hazard zone than that specified in the special provision; or

(F) The material can be appropriately described by a shipping name that describes its intended application, such as ''Coating solution'', ''Extracts, flavoring'' or ''Compound, cleaning liquid''.

(ii) If one or more of the conditions specified in paragraph (c)(10)(i) of this section is satisfied, then a proper shipping name shall be selected as prescribed in paragraph (c)(12)(ii) of this section.

(iii) A mixture or solution not identified in the Table specifically by name, comprised of two or more hazardous materials in the same hazard class, shall be described using an appropriate shipping description (e.g., ''Flammable liquid, n.o.s.''). The name that most appropriately describes the material shall be used; e.g., an alcohol not listed by its technical name in the Table shall be described as ''Alcohol, n.o.s.'' rather than ''Flammable liquid, n.o.s.''. Some mixtures may be more appropriately described according to their application, such as ''Coating solution'' or ''Extracts, flavoring liquid'' rather than by an n.o.s. entry. Under the provisions of subparts C and D of this part, the technical names of at least two components most predominately contributing to the hazards of the mixture or solution may be required in association with the proper shipping name.

(11) Except for a material subject to or prohibited by §§ 173.21, 173.51, 173.56(d), 173.56(e)(1), 173.124(a)(2)(iii) or 173.128(c) of this subchapter, a material for which the hazard class is uncertain and must be determined by testing or a material that is a hazardous waste may be assigned a tentative shipping name, hazard class, identification number, and packing group, based on the shipper's tentative determination according to—

(i) Defining criteria in this subchapter;

(ii) The hazard precedence prescribed in § 173.2a of this subchapter; and

(iii) The shipper's knowledge of the material.

(12) Except when the proper shipping name in the Table is preceded by a plus (+)—

(i) If it is specifically determined that a material meets the definition of a hazard class, packing group or hazard zone, other than the class, packing group or hazard zone shown in association with the proper shipping name, or does not meet the defining criteria for a subsidiary hazard shown in Column 6 of the Table, the material shall be described by an appropriate proper shipping name listed in association with the correct hazard class, packing group, hazard zone, or subsidiary hazard for the material.

(ii) *Generic or n.o.s. descriptions.* If an appropriate technical name is not shown in the Table, selection of a proper shipping name shall be made from the generic or n.o.s. descriptions corresponding to the specific hazard class, packing group, hazard zone, or subsidiary hazard, if any, for the material. The name that most appropriately describes the material shall be used; e.g., an alcohol not listed by its technical name in the Table shall be described as ''Alcohol, n.o.s.'' rather than ''Flammable liquid, n.o.s.''. Some mixtures may be more appropriately described according to their application, such as ''Coating solution'' or ''Extracts, flavoring, liquid'', rather than by an n.o.s. entry, such as ''Flammable liquid, n.o.s.'' It should be noted, however, that an n.o.s. description as a proper shipping name may not provide sufficient information for shipping papers and package markings. Under the provisions of subparts C and D of this part, the technical name of one or more constituents which makes the product a hazardous material may be required in association with the proper shipping name.

(iii) *Multiple hazard materials.* If a material meets the definition of more than one hazard class, and is not identified in the Table specifically by name (e.g., acetyl chloride), the hazard class of the material shall be determined by using the precedence specified in § 173.2a of this subchapter, and an appropriate shipping description (e.g., ''Flammable liquid, corrosive n.o.s.'') shall be selected as described in paragraph (c)(12)(ii) of this section.

(iv) If it is specifically determined that a material is not a forbidden material and does not meet the definition of any hazard class, the material is not a hazardous material.

(13) *Self-reactive materials and organic peroxides.* A generic proper shipping name for a self-reactive material or an organic peroxide, as listed in Column 2 of the Table, must be selected based on the material's technical name and concentration, in accordance with the provisions of §§ 173.224 or 173.225 of this subchapter, respectively.

(14) A proper shipping name that describes all isomers of a material may be used to identify any isomer of that material if the isomer meets criteria for the same hazard class or division, subsidiary risk(s) and packing group, unless the isomer is specifically identified in the Table.

(15) Hydrates of inorganic substances may be identified using the proper shipping name for the equivalent anhydrous substance if the hydrate meets the same hazard class or division, subsidiary risk(s) and packing group, unless the hydrate is specifically identified in the Table.

(d) *Column 3: Hazard class or Division.* Column 3 contains a designation of the hazard class or division corresponding to each proper shipping name, or the word ''Forbidden''.

(1) A material for which the entry in this column is ''Forbidden'' may not be offered for transportation or transported. This prohibition does not apply if the material is diluted, stabilized or incorporated in a device and it is

classed in accordance with the definitions of hazardous materials contained in part 173 of this subchapter.

(2) When a reevaluation of test data or new data indicates a need to modify the ''Forbidden'' designation or the hazard class or packing group specified for a material specifically identified in the Table, this data should be submitted to the Associate Administrator for Hazardous Materials Safety.

(3) A basic description of each hazard class and the section reference for class definitions appear in § 173.2 of this subchapter.

(4) Each reference to a Class 3 material is modified to read ''Combustible liquid'' when that material is reclassified in accordance with § 173.150 (e) or (f) of this subchapter or has a flash point above 60.5°C (141°F) but below 93°C (200°F).

(e) *Column 4: Identification number.* Column 4 lists the identification number assigned to each proper shipping name. Those preceded by the letters ''UN'' are associated with proper shipping names considered appropriate for international transportation as well as domestic transportation. Those preceded by the letters ''NA'' are associated with proper shipping names not recognized for international transportation, except to and from Canada. Identification numbers in the ''NA9000'' series are associated with proper shipping names not appropriately covered by international hazardous materials (dangerous goods) transportation standards, or not appropriately addressed by international transportation standards for emergency response information purposes, except for transportation between the United States and Canada.

(f) *Column 5: Packing group.* Column 5 specifies one or more packing groups assigned to a material corresponding to the proper shipping name and hazard class for that material. Class 2, Class 7, Division 6.2 (other than regulated medical wastes), and ORD–D materials, do not have packing groups. Packing Groups I, II and III indicate the degree of danger presented by the material is either great, medium or minor, respectively. If more than one packing group is indicated for an entry, the packing group for the hazardous material is determined using the criteria for assignment of packing groups specified in subpart D of part 173. When a reevaluation of test data or new data indicates a need to modify the specified packing group(s), the data should be submitted to the Associate Administrator for Hazardous Materials Safety. Each reference in this column to a material which is a hazardous waste or a hazardous substance, and whose proper shipping name is preceded in Column 1 of the Table by the letter ''A'' or ''W'', is modified to read ''III'' on those occasions when the material is offered for transportation or transported by a mode in which its transportation is not otherwise subject to requirements of this subchapter.

(g) *Column 6: Labels.* Column 6 specifies codes which represent the hazard warning labels required for a package filled with a material conforming to the associated hazard class and proper shipping name, unless the package is otherwise excepted from labeling by a provision in subpart E of this part, or part 173 of this subchapter. The first code is indicative of the primary hazard of the material. Additional label codes are indicative of subsidiary hazards. Provisions in § 172.402 may require that a label other than that specified in Column 6 be affixed to the package in addition to that specified in Column 6. No label is required for a material classed as a combustible liquid or for a Class 3 material that is reclassed as a combustible liquid. The codes contained in Column 6 are defined according to the following table:

LABEL SUBSTITUTION TABLE

Label code	Label name
1	Explosive.
1.1[1]	Explosive 1.1.[1]
1.2[1]	Explosive 1.2.[1]
1.3[1]	Explosive 1.3.[1]
1.4[1]	Explosive 1.4.[1]
1.5[1]	Explosive 1.5.[1]
1.6[1]	Explosive 1.6.[1]
2.1	Flammable Gas.
2.2	Non-Flammable Gas.
2.3	Poison Gas.
3	Flammable Liquid.
4.1	Flammable Solid.
4.2	Spontaneously Combustible.
4.3	Dangerous When Wet.
5.1	Oxidizer.
5.2	Organic Peroxide.
6.1 (I)[2]	Poison.
6.1 (II)[2]	Poison.

LABEL SUBSTITUTION TABLE—Continued

Label code	Label name
6.1 (III)[2]	Keep Away From Food.
6.2	Infectious Substance.
7	Radioactive.
8	Corrosive.
9	Class 9.

[1] Refers to the appropriate compatibility group letter.
[2] The packing group for a material is indicated in column 5 of the table.

(h) *Column 7: Special provisions.* Column 7 specifies codes for special provisions applicable to hazardous materials. When Column 7 refers to a special provision for a hazardous material, the meaning and requirements of that special provision are as set forth in § 172.102 of this subpart.

(i) *Column 8: Packaging authorizations.* Columns 8A, 8B and 8C specify the applicable sections for exceptions, non-bulk packaging requirements and bulk packaging requirements, respectively, in part 173 of this subchapter. Columns 8A, 8B and 8C are completed in a manner which indicates that ''§ 173.'' precedes the designated numerical entry. For example, the entry ''202'' in Column 8B associated with the proper shipping name ''Gasoline'' indicates that for this material conformance to non-bulk packaging requirements prescribed in § 173.202 of this subchapter is required. When packaging requirements are specified, they are in addition to the standard requirements for all packagings prescribed in § 173.24 of this subchapter and any other applicable requirements in subparts A and B of part 173 of this subchapter.

(1) Exceptions. Column 8A contains exceptions from some of the requirements of this subchapter. The referenced exceptions are in addition to those specified in subpart A of part 173 and elsewhere in this subchapter. A ''None'' in this column means no packaging exceptions are authorized, except as may be provided by special provisions in Column 7.

(2) Non-bulk packaging. Column 8B references the section in part 173 of this subchapter which prescribes packaging requirements for non-bulk packagings. A ''None'' in this column means non-bulk packagings are not authorized, except as may be provided by special provisions in Column 7. Each reference in this column to a material which is a hazardous waste or a hazardous substance, and whose proper shipping name is preceded in Column 1 of the Table by the letter ''A'' or ''W'', is modified to include ''§ 173.203'' or ''§ 173.213'', as appropriate for liquids and solids, respectively, on those occasions when the material is offered for transportation or transported by a mode in which its transportation is not otherwise subject to the requirements of this subchapter.

(3) Bulk packaging. Column 8C specifies the section in part 173 of this subchapter which prescribes packaging requirements for bulk packagings, subject to the limitations, requirements and additional authorizations of Column 7. A ''None'' in this column means bulk packagings are not authorized, except as may be provided by special provisions in Column 7. Additional authorizations and limitations for use of IM portable tanks are set forth in Column 7. For each reference in this column to a material which is a hazardous waste or a hazardous substance, and whose proper shipping name is preceded in Column 1 of the Table by the letter ''A'' or ''W'' and which is offered for transportation or transported by a mode in which its transportation is not otherwise subject to the requirements of this subchapter:

(i) The column reference is § 173.240 or § 173.241, as appropriate.

(ii) For a solid material, the exception provided in Special provision B54 is applicable.

(iii) For a Class 9 material which meets the definition of an elevated temperature material, the column reference is § 173.247.

(4) For a hazardous material which is specifically named in the Table and whose packaging sections specify packagings not applicable to the form of the material (e.g., packaging specified is for solid material and the material is being offered for transportation in a liquid form) the following table should be used to determine the appropriate packaging section:

Packaging section reference for solid materials	Corresponding packaging section for liquid materials
§ 173.187	§ 173.181
§ 173.211	§ 173.201
§ 173.212	§ 173.202
§ 173.213	§ 173.203

Packaging section reference for solid materials	Corresponding packaging section for liquid materials
§ 173.240	§ 173.241
§ 173.242	§ 173.243

(j) *Column 9: Quantity limitations.* Columns 9A and 9B specify the maximum quantities that may be offered for transportation in one package by passenger-carrying aircraft or passenger-carrying rail car (Column 9A) or by cargo aircraft only (Column 9B), subject to the following:

(1) ''Forbidden'' means the material may not be offered for transportation or transported in the applicable mode of transport.

(2) The quantity limitation is ''net'' except where otherwise specified, such as for ''Consumer commodity'' which specifies ''30 kg gross.''

(3) When articles or devices are specifically listed by name, the net quantity limitation applies to the entire article or device (less packaging and packaging materials) rather than only to its hazardous components.

(4) A package offered or intended for transportation by aircraft and which is filled with a material forbidden on passenger-carrying aircraft but permitted on cargo aircraft only, or which exceeds the maximum net quantity authorized on passenger-carrying aircraft, shall be labelled with the CARGO AIRCRAFT ONLY label specified in § 172.448 of this part.

(k) *Column 10: Vessel stowage requirements.* Column 10A [Vessel stowage] specifies the authorized stowage locations on board cargo and passenger vessels. Column 10B [Other provisions] specifies codes for stowage requirements for specific hazardous materials. The meaning of each code in Column 10B is set forth in § 176.84 of this subchapter. Section 176.63 of this subchapter sets forth the physical requirements for each of the authorized locations listed in Column 10A. (For bulk transportation by vessel, see 46 CFR parts 30 to 40, 70, 98, 148, 151, 153 and 154.) The authorized stowage locations specified in Column 10A are defined as follows:

(1) Stowage category ''A'' means the material may be stowed ''on deck'' or ''under deck'' on a cargo vessel and on a passenger vessel.

(2) Stowage category ''B'' means—

(i) The material may be stowed ''on deck'' or ''under deck'' on a cargo vessel and on a passenger vessel carrying a number of passengers limited to not more than the larger of 25 passengers, or one passenger per each three meters of overall vessel length; and

(ii) ''On deck only'' on passenger vessels in which the number of passengers specified in paragraph (k)(2)(i) of this section is exceeded.

(3) Stowage category ''C'' means the material must be stowed ''on deck only'' on a cargo vessel and on a passenger vessel.

(4) Stowage category ''D'' means the material must be stowed ''on deck only'' on a cargo vessel and on a passenger vessel carrying a number of passengers limited to not more than the larger of 25 passengers or one passenger per each three meters of overall vessel length, but the material is prohibited on passenger vessels in which the limiting number of passengers is exceeded.

(5) Stowage category ''E'' means the material may be stowed ''on deck'' or ''under deck'' on a cargo vessel and on a passenger vessel carrying a number of passengers limited to not more than the larger of 25 passengers, or one passenger per each three meters of overall vessel length, but is prohibited from carriage on passenger vessels in which the limiting number of passengers is exceeded.

(l) *Changes to the Table.* (1) Unless specifically stated otherwise in a rule document published in the FEDERAL REGISTER amending the Table—

(i) Such a change does not apply to the shipment of any package filled prior to the effective date of the amendment; and

(ii) Stocks of preprinted shipping papers and package markings may be continued in use, in the manner previously authorized, until depleted or for a one-year period, subsequent to the effective date of the amendment, whichever is less.

(2) Except as otherwise provided in this section, any alteration of a shipping description or associated entry which is listed in the § 172.101 Table must receive prior written approval from the Associate Administrator for Hazardous Materials Safety.

(3) The proper shipping name of a hazardous material changed in the May 6, 1997 final rule, in effect on October 1, 1997, only by the addition or omission of the word ''compressed,'' ''inhibited,'' ''liquefied'' or ''solution'' may continue to be used to comply with package marking requirements, until January 1, 2003.

§172.101 HAZARDOUS MATERIALS TABLE

Symbols	Hazardous materials descriptions and proper shipping names	Hazard class or Division	Identification Numbers	PG	Label Codes	Special provisions	(8) Packaging (§173.***)			(9) Quantity limitations		(10) Vessel stowage	
							Exceptions	Non-bulk	Bulk	Passenger aircraft/rail	Cargo aircraft only	Location	Other
(1)	(2)	(3)	(4)	(5)	(6)	(7)	(8A)	(8B)	(8C)	(9A)	(9B)	(10A)	(10B)
	Accellerene, see p-Nitrosodimethylaniline.	.....			.....		.....	.....	.....	.....	.....		
	Accumulators, electric, see Batteries, wet *etc.*	.....			.....		.....	.....	.....	.....	.....		
D	Accumulators, pressurized, pneumatic *or* hydraulic (*containing nonflammable gas.*	2.2	NA1956		2.2		306	306	None ..	No limit	No limit	A	
	Acetal	3	UN1088	II	3	T7	150	202	242	5 L	60 L	E	
	Acetaldehyde	3	UN1089	I	3	A3, B16, T20, T26, T29	None	201	243	Forbidden	30 L	E	
A	Acetaldehyde ammonia	9	UN1841	III	9		155	204	240	200 kg	200 kg	A	34
	Acetaldehyde oxime	3	UN2332	III	3	B1, T8	150	203	242	60 L	220 L	A	
	Acetic acid, glacial *or* Acetic acid solution, *with more than 80 percent acid, by mass.*	8	UN2789	II	8, 3	A3, A6, A7, A10 B2, T8	154	202	243	1 L	30 L	A	
	Acetic acid solution, *with more than 10 percent but not more than 80 percent acid, by mass.*	8	UN2790	II	8	A3, A6, A7, A10 B2, T8	154	202	242	1 L	30 L	A	
	Acetic anhydride	8	UN1715	II	8, 3	A3, A6, A7, A10, B2, T8	154	202	243	1 L	30 L	A	40
	Acetone	3	UN1090	II	3	T8	150	202	242	5 L	60 L	B	
	Acetone cyanohydrin, stabilized	6.1	UN1541	I	6.1	2, A3, B9, B14, B32, B76, B77, N34, T38, T43, T45	None	227	244	Forbidden	30 L	D	25, 40, 49
	Acetone oils	3	UN1091	II	3	T7, T30	150	202	242	5 L	60 L	B	
	Acetonitrile	3	UN1648	II	3	T14	150	202	242	1 L	60 L	B	40
	Acetyl acetone peroxide with more than 9 percent by mass active oxygen.	Forbidden			.....		.....	.....	.....	.....	.....		
	Acetyl benzoyl peroxide, solid, or with more than 40 percent in solution.	Forbidden			.....		.....	.....	.....	.....	.....		
	Acetyl bromide	8	UN1716	II	8	B2, T12, T26	154	202	242	1 L	30 L	C	40
	Acetyl chloride	3	UN1717	II	3, 8	A3, A6, A7, B100, N34, T18, T26	None	202	243	1 L	5 L	B	40
	Acetyl cyclohexanesulfonyl peroxide, with more than 82 percent wetted with less than 12 percent water.	Forbidden			.....		.....	.....	.....	.....	.....		

Acetyl iodide	8	UN1898	II	8	B2, B101, T9	154	202	242	1 L	30 L	C	40
Acetyl methyl carbinol	3	UN2621	III	3	B1, T1	150	203	242	60 L	220 L	A	
Acetyl peroxide, solid, or with more than 25 percent in solution.	Forbidden											
Acetylene, dissolved	2.1	UN1001		2.1		None	303	None	Forbidden	15 kg	D	25, 40, 57
Acetylene (liquefied)	Forbidden											
Acetylene silver nitrate	Forbidden											
Acetylene tetrabromide, see Tetrabromoethane.												
Acid butyl phosphate, see Butyl acid phosphate.												
Acid, sludge, *see* Sludge acid												
Acridine	6.1	UN2713	III	6.1		153	213	240	100 kg	200 kg	A	
Acrolein dimer, stabilized	3	UN2607	III	3	B1, T1	150	203	242	60 L	220 L	A	40
Acrolein, inhibited	6.1	UN1092	I	6.1, 3	1, B9, B14, B30, B42, B72, B77, T38, T43, T44	None	226	244	Forbidden	Forbidden	D	40
Acrylamide	6.1	UN2074	III	6.1	T8	153	213	240	100 kg	200 kg	A	12
Acrylic acid, inhibited	8	UN2218	II	8, 3	B2, T8	154	202	243	1 L	30 L	C	25, 40
Acrylonitrile, inhibited	3	UN1093	I	3, 6.1	B9, T18, T26	None	201	243	Forbidden	30 L	E	40
Actuating cartridge, explosive, see Cartridges, power device.												
Adhesives, *containing a flammable liquid.*	3	UN1133	I	3	B42, T7, T30	150	201	243	1 L	30 L	B	
			II	3	B52, T7, T30	150	173	242	5 L	60 L	B	
			III	3	B1, B52, T7, T30	150	173	242	60 L	220 L	A	
Adiponitrile	6.1	UN2205	III	6.1	T1	153	203	241	60 L	220 L	A	
Aerosols, *corrosive, Packing Group II or III, (each not exceeding 1 L capacity).*	2.2	UN1950		2.2, 8	A34	306	None	None	75 kg	150 kg	A	40, 48, 85
Aerosols, *flammable, (each not exceeding 1 L capacity).*	2.1	UN1950		2.1	N82	306	None	None	75 kg	150 kg	A	40, 48, 85
Aerosols, flammable, n.o.s. (*engine starting fluid*) (*each not exceeding 1 L capacity*).	2.1	UN1950		2.1	N82	306	None	None	Forbidden	Forbidden	A	40, 48, 85
Aerosols, *non-flammable, (each not exceeding 1 L capacity).*	2.2	UN1950		2.2		306, 307	None	None	75 kg	150 kg	A	48, 85
Aerosols, *poison, each not exceeding 1 L capacity.*	2.2	UN1950		2.2		306	None	None	Forbidden	Forbidden	A	40, 48, 85
Air bag inflators *or* Air bag modules *or* Seat-belt pre-tensioners.	9	UN3268	III	9		166	166	166	25 kg	100 kg	A	
Air, compressed	2.2	UN1002		2.2		306	302	302	75 kg	150 kg	A	
Air, refrigerated liquid, *(cryogenic liquid).*	2.2	UN1003		2.2, 5.1.		320	316	318, 319.	Forbidden	150 kg	D	51
Air, refrigerated liquid, *(cryogenic liquid) non-pressurized.*	2.2	UN1003		2.2, 5.1.		320	316	318, 319.	Forbidden	Forbidden	D	51
Aircraft evacuation slides, see Life saving appliances *etc.*												

§172.101 HAZARDOUS MATERIALS TABLE—Continued

Symbols	Hazardous materials descriptions and proper shipping names	Hazard class or Division	Identification Numbers	PG	Label Codes	Special provisions	(8) Packaging (§173.***) Exceptions	Non-bulk	Bulk	(9) Quantity limitations Passenger aircraft/rail	Cargo aircraft only	(10) Vessel stowage Location	Other
(1)	(2)	(3)	(4)	(5)	(6)	(7)	(8A)	(8B)	(8C)	(9A)	(9B)	(10A)	(10B)
	Aircraft hydraulic power unit fuel tank *(containing a mixture of anhydrous hydrazine and monomethyl hydrazine) (M86 fuel).*	3	UN3165	I	3, 6.1, 8.		None	172	None	Forbidden	42 L	E	
	Aircraft survival kits, see Life saving appliances *etc.*												
	Alcoholates solution, n.o.s., *in alcohol.*	3	UN3274	II	3, 8		None	202	243	1 L	5 L	B	
	Alcoholic beverages	3	UN3065	II	3	24, B1, T1	150	202	242	5 L	60 L	A	
				III	3	24, B1, N11, T1	150	203	242	60 L	220 L	A	
	Alcohols, n.o.s	3	UN1987	I	3	T8, T31	None	201	243	1 L	30 L	E	
				II	3	T8, T31	150	202	242	5 L	60 L	B	
				III	3	B1, T7, T30	150	203	242	60 L	220 L	A	
	Alcohols, flammable, toxic, n.o.s	3	UN1986	I	3, 6.1	T8, T31	None	201	243	Forbidden	30 L	E	40
				II	3, 6.1	T8, T31	None	202	243	1 L	60 L	B	40
				III	3, 6.1	B1, T8, T31	None	203	242	60 L	220 L	A	
	Aldehydes, n.o.s	3	UN1989	I	3	T8, T31	None	201	243	1 L	30 L	E	
				II	3	T8, T31	150	202	242	5 L	60 L	B	
				III	3	B1, T7, T30	150	203	242	60 L	220 L	A	
	Aldehydes, flammable, toxic, n.o.s	3	UN1988	I	3, 6.1	T8, T31	None	201	243	Forbidden	30 L	E	40
				II	3, 6.1	T8, T31	None	202	243	1 L	60 L	B	40
				III	3, 6.1	B1, T8, T31	150	203	242	60 L	220 L	A	
	Aldol	6.1	UN2839	II	6.1	T8	None	202	243	5 L	60 L	A	12
D	Aldrin, *liquid*	6.1	NA2762	II	6.1		None	202	243	5 L	60 L	B	
D	Aldrin, *solid*	6.1	NA2761	II	6.1		None	212	242	25 kg	100 kg	A	40
	Alkali metal alcoholates, self-heating, corrosive, n.o.s.	4.2	UN3206	II	4.2, 8	64	None	212	242	15 kg	50 kg	B	
				III	4.2, 8	64	None	213	242	25 kg	100 kg	B	
	Alkali metal alloys, liquid, n.o.s	4.3	UN1421	I	4.3	A2, A3, B48, N34	None	201	244	Forbidden	1 L	D	
	Alkali metal amalgams	4.3	UN1389	I	4.3	A2, A3, N34	None	201	244	Forbidden	1 L	D	
	Alkali metal amides	4.3	UN1390	II	4.3	A6, A7, A8, A19, A20, B106	151	212	241	15 kg	50 kg	E	40
	Alkali metal dispersions, *or* Alkaline earth metal dispersions.	4.3	UN1391	I	4.3	A2, A3	None	201	244	Forbidden	1 L	D	
	Alkaline corrosive liquids, n.o.s., see Caustic alkali liquids, n.o.s.												
	Alkaline earth metal alcoholates, n.o.s.	4.2	UN3205	II	4.2	65	None	212	241	15 kg	50 kg	B	
				III	4.2	65	None	213	241	15 kg	100 kg	B	

Alkaline earth metal alloys, n.o.s	4.3	UN1393	II	4.3	A19, B101, B106	151	212	241	15 kg	50 kg	E	
Alkaline earth metal amalgams	4.3	UN1392	I	4.3	A19, B101, B106, N34, N40	None	211	242	Forbidden	15 kg	D	
Alkaloids, liquid, n.o.s., *or* Alkaloid salts, liquid, n.o.s.	6.1	UN3140	I	6.1	A4, T42	None	201	243	1 L	30 L	A	
			II	6.1	T14	None	202	243	5 L	60 L	A	
			III	6.1	T7	153	203	241	60 L	220 L	A	
Alkaloids, solid, n.o.s. *or* Alkaloid salts, solid, n.o.s. *poisonous.*	6.1	UN1544	I	6.1		None	211	242	5 kg	50 kg	A	
			II	6.1		None	212	242	25 kg	100 kg	A	
			III	6.1		153	213	240	100 kg	200 kg	A	
Alkyl sulfonic acids, liquid *or* Aryl sulfonic acids, liquid *with more than 5 percent free sulfuric acid.*	8	UN2584	II	8	B2, T8, T27	154	202	242	1 L	30 L	B	
Alkyl sulfonic acids, liquid *or* Aryl sulfonic acids, liquid *with not more than 5 percent free sulfuric acid.*	8	UN2586	III	8	T8	154	203	241	5 L	60 L	B	
Alkyl sulfonic acids, solid *or* Aryl sulfonic acids, solid, *with more than 5 percent free sulfuric acid.*	8	UN2583	II	8		154	212	240	15 kg	50 kg	A	
Alkyl sulfonic acids, solid *or* Aryl sulfonic acids, solid *with not more than 5 percent free sulfuric acid.*	8	UN2585	III	8		154	213	240	25 kg	100 kg	A	
Alkylphenols, liquid, n.o.s. *(including C2-C12 homologues).*	8	UN3145	I	8	T8	None	201	243	0.5 L	2.5 L	B	
			II	8	T8	154	202	242	1 L	30 L	B	
			III	8	T7	154	203	241	5 L	60 L	A	
Alkylphenols, solid, n.o.s. *(including C2-C12 homologues).*	8	UN2430	I	8	T8	None	211	242	1 kg	25 kg	B	
			II	8	T8	154	212	240	15 kg	50 kg	B	
			III	8	T8	154	213	240	25 kg	100 kg	A	
Alkylsulfuric acids	8	UN2571	II	8	B2, T9, T27	154	202	242	1 L	30 L	C	14
Allethrin, see Pesticides, liquid, toxic, n.o.s.												
Allyl acetate	3	UN2333	II	3, 6.1	T8	None	202	243	1 L	60 L	E	40
Allyl alcohol	6.1	UN1098	I	6.1, 3	2, B9, B14, B32, B74, B77, T38, T43, T45	None	227	244	Forbidden	Forbidden	D	40
Allyl bromide	3	UN1099	I	3, 6.1	T18	None	201	243	Forbidden	30 L	B	40
Allyl chloride	3	UN1100	I	3, 6.1	T18, T26	None	201	243	Forbidden	30 L	E	40
Allyl chlorocarbonate, see Allyl chloroformate.												
Allyl chloroformate	6.1	UN1722	I	6.1, 3, 8.	2, A3, B9, B14, B32, B74, N41, T38, T43, T45	None	227	244	Forbidden	Forbidden	D	40
Allyl ethyl ether	3	UN2335	II	3, 6.1	T8	None	202	243	1 L	60 L	E	40
Allyl formate	3	UN2336	I	3, 6.1	T18, T26	None	201	243	Forbidden	30 L	E	40
Allyl glycidyl ether	3	UN2219	III	3	B1, T7	150	203	242	60 L	220 L	A	
Allyl iodide	3	UN1723	II	3, 8	A3, A6, B100, N34, T18	None	202	243	1 L	5 L	B	40

§172.101 HAZARDOUS MATERIALS TABLE—Continued

Symbols	Hazardous materials descriptions and proper shipping names	Hazard class or Division	Identification Numbers	PG	Label Codes	Special provisions	(8) Packaging (§173.***) Exceptions	Non-bulk	Bulk	(9) Quantity limitations Passenger aircraft/rail	Cargo aircraft only	(10) Vessel stowage Location	Other
(1)	(2)	(3)	(4)	(5)	(6)	(7)	(8A)	(8B)	(8C)	(9A)	(9B)	(10A)	(10B)
	Allyl isothiocyanate, stabilized	6.1	UN1545	II	6.1, 3	A3, A7	None	202	243	Forbidden	60 L	D	40
	Allylamine	6.1	UN2334	I	6.1, 3	2, B9, B14, B32, B74, T38, T43, T45	None	227	244	Forbidden	Forbidden	D	40
	Allyltrichlorosilane, stabilized	8	UN1724	II	8, 3	A7, B2, B6, N34, T8, T26	None	202	243	Forbidden	30 L	C	40
	Aluminum alkyl halides	4.2	UN3052	I	4.2	B9, B11, T28, T29, T40	None	181	244	Forbidden	Forbidden	D	
	Aluminum alkyl hydrides	4.2	UN3076	I	4.2	B9, B11, T28, T29, T40	None	181	244	Forbidden	Forbidden	D	
	Aluminum alkyls	4.2	UN3051	I	4.2	B9, B11, T28, T29, T40	None	181	244	Forbidden	Forbidden	D	
	Aluminum borohydride *or* Aluminum borohydride in devices.	4.2	UN2870	I	4.2, 4.3.	B11	None	181	244	Forbidden	Forbidden	D	
	Aluminum bromide, anhydrous	8	UN1725	II	8	B106	154	212	240	15 kg	50 kg	A	40
	Aluminum bromide, solution	8	UN2580	III	8	T8	154	203	241	5 L	60 L	A	
	Aluminum carbide	4.3	UN1394	II	4.3	A20, B101, B106, N41	151	212	242	15 kg	50 kg	A	
	Aluminum chloride, anhydrous	8	UN1726	II	8	B106	154	212	240	15 kg	50 kg	A	40
	Aluminum chloride, solution	8	UN2581	III	8	T8	154	203	241	5 L	60 L	A	
	Aluminum dross, wet or hot	Forbidden											
	Aluminum ferrosilicon powder	4.3	UN1395	II	4.3, 6.1.	A19, B106, B108	151	212	242	15 kg	50 kg	A	40, 85, 103
				III	4.3, 6.1.	A19, A20, B106, B108	151	213	241	25 kg	100 kg	A	40, 85, 103
	Aluminum hydride	4.3	UN2463	I	4.3	A19, B100, N40	None	211	242	Forbidden	15 kg	E	
D	Aluminum, molten	9	NA9260	III	9		None	None	247	Forbidden	Forbidden	D	
	Aluminum nitrate	5.1	UN1438	III	5.1	A1, A29	152	213	240	25 kg	100 kg	A	
	Aluminum phosphate solution, see Corrosive liquids, *etc.*												
	Aluminum phosphide	4.3	UN1397	I	4.3, 6.1.	A8, A19, B100, N40	None	211	242	Forbidden	15 kg	E	40, 85
	Aluminum phosphide pesticides	6.1	UN3048	I	6.1	A8	None	211	242	Forbidden	15 kg	E	40, 85
	Aluminum powder, coated	4.1	UN1309	II	4.1		151	212	240	15 kg	50 kg	A	13, 39, 101
				III	4.1		151	213	240	25 kg	100 kg	A	13, 39, 101
	Aluminum powder, uncoated	4.3	UN1396	II	4.3	A19, A20, B106, B108	151	212	242	15 kg	50 kg	A	39

	.....	.....		III	4.3	A19, A20, B106, B108	151	213	241	25 kg	100 kg	A	39
	Aluminum resinate	4.1	UN2715	III	4.1		151	213	240	25 kg	100 kg	A	
	Aluminum silicon powder, uncoated	4.3	UN1398	III	4.3	A1, A19, B108	151	213	241	25 kg	100 kg	A	40, 85, 103
	Aluminum smelting by-products *or* Aluminum remelting by-products.	4.3	UN3170	II	4.3	B106, B115	None	212	242	15 kg	50 kg	B	85, 103
	.....	.....		III	4.3	B106, B115	None	213	241	25 kg	100 kg	B	85, 103
	Amatols, see Explosives, blasting, type B.	.....			.....		.....	.....	.....	.....	.....		
	Amines, flammable, corrosive, n.o.s. *or* Polyamines, flammable, corrosive, n.o.s..	3	UN2733	I	3, 8	T42	None	201	243	0.5 L	2.5 L	D	40
	.....	.....		II	3, 8	T8, T31	None	202	243	1 L	5 L	B	40
	.....	.....		III	3, 8	B1, T8, T31	150	203	242	5 L	60 L	A	40
	Amines, liquid, corrosive, flammable, n.o.s. *or* Polyamines, liquid, corrosive, flammable, n.o.s.	8	UN2734	I	8, 3	A3, A6, N34, T8, T31	None	201	243	0.5 L	2.5 L	A	
	.....	.....		II	8, 3	T8, T31	None	202	243	1 L	30 L	A	
	Amines, liquid, corrosive, n.o.s, *or* Polyamines, liquid, corrosive, n.o.s.	8	UN2735	I	8	A3, A6, B10, N34, T42	None	201	243	0.5 L	2.5 L	A	
	.....	.....		II	8	B2, T8	154	202	242	1 L	30 L	A	
	.....	.....		III	8	T8	154	203	241	5 L	60 L	A	
	Amines, solid, corrosive, n.o.s., *or* Polyamines, solid, corrosive n.o.s.	8	UN3259	I	8		None	211	242	1 kg	25 kg	A	
	.....	.....		II	8		154	212	240	15 kg	50 kg	A	
	.....	.....		III	8		154	213	240	25 kg	100 kg	A	
	2-Amino-4-chlorophenol	6.1	UN2673	II	6.1		None	212	242	25 kg	100 kg	A	
	2-Amino-5-diethylaminopentane	6.1	UN2946	III	6.1	T1	153	203	241	60 L	220 L	A	
	2-Amino-4,6-Dinitrophenol, wetted *with not less than 20 percent water by mass.*	4.1	UN3317	I	4.1	23,A8, A19, A20, N41	None	211	None ..	1 kg	15 kg	E	28, 36
	2-(2-Aminoethoxy) ethanol	8	UN3055	III	8	T2	154	203	241	5 L	60 L	A	
	N-Aminoethylpiperazine	8	UN2815	III	8	T7	154	203	241	5 L	60 L	A	12
	Aminophenols *(o-; m-; p-)*	6.1	UN2512	III	6.1	T1	153	213	240	100 kg	200 kg	A	
	Aminopropyldiethanolamine, see Amines,*etc.*	.....			.....		.....	.....	.....	.....	.....		
	n-Aminopropylmorpholine, see Amines, *etc.*	.....			.....		.....	.....	.....	.....	.....		
	Aminopyridines *(o-; m-; p-)*	6.1	UN2671	II	6.1	T7	None	212	242	25 kg	100 kg	B	12, 40
I	Ammonia, anhydrous	2.3	UN1005	.....	2.3, 8	4	None	304	314, 315.	Forbidden	25 kg	D	40, 57
D	Ammonia, anhydrous	2.2	UN1005	.....	2.2	13	None	304	314, 315.	Forbidden	25 kg	D	40, 57
D	Ammonia solution, *relative density less than 0.880 at 15 degrees C in water, with more than 50 percent ammonia.*	2.2	UN3318	.....	2.2	13	None	304	314, 315.	Forbidden	25 kg	D	40, 57

§172.101 HAZARDOUS MATERIALS TABLE—Continued

Symbols	Hazardous materials descriptions and proper shipping names	Hazard class or Division	Identification Numbers	PG	Label Codes	Special provisions	(8) Packaging (§173.***)			(9) Quantity limitations		(10) Vessel stowage	
							Exceptions	Nonbulk	Bulk	Passenger aircraft/rail	Cargo aircraft only	Location	Other
(1)	(2)	(3)	(4)	(5)	(6)	(7)	(8A)	(8B)	(8C)	(9A)	(9B)	(10A)	(10B)
I	Ammonia solution, *relative density less than 0.880 at 15 degrees C in water, with more than 50 percent ammonia.*	2.3	UN3318	.....	2.3, 8	4	None	304	314, 315.	Forbidden	25 kg	D	40, 57
	Ammonia solutions, *relative density between 0.880 and 0.957 at 15 degrees C in water, with more than 10 percent but not more than 35 percent ammonia.*	8	UN2672	III	8	T14	154	203	241	5 L	60 L	A	40, 85
	Ammonia solutions, *relative density less than 0.880 at 15 degrees C in water, with more than 35 percent but not more than 50 percent ammonia.*	2.2	UN2073		2.2		306	304	314, 315.	Forbidden	150 kg	E	40, 57
	Ammonium arsenate	6.1	UN1546	II	6.1		None	212	242	25 kg	100 kg	A	
	Ammonium azide	Forbidden			.....		.....	.....	.....	.....	.....		
	Ammonium bifluoride, solid, see Ammonium hydrogen difluoride, solid.	.....			.....		.....	.....	.....	.....	.....		
	Ammonium bifluoride solution, see Ammonium hydrogen difluoride, solution.	.....			.....		.....	.....	.....	.....	.....		
	Ammonium bromate	Forbidden			.....		.....	.....	.....	.....	.....		
	Ammonium chlorate	Forbidden			.....		.....	.....	.....	.....	.....		
	Ammonium dichromate	5.1	UN1439	II	5.1		152	212	242	5 kg	25 kg	A	
	Ammonium dinitro-o-cresolate	6.1	UN1843	II	6.1	T8	None	212	242	25 kg	100 kg	B	36, 65, 66, 77
	Ammonium fluoride	6.1	UN2505	III	6.1		153	213	240	100 kg	200 kg	A	26
	Ammonium fluorosilicate	6.1	UN2854	III	6.1		153	213	240	100 kg	200 kg	A	26
	Ammonium fulminate	Forbidden			.....		.....	.....	.....	.....	.....		
	Ammonium hydrogen sulfate	8	UN2506	II	8		154	212	240	15 kg	50 kg	A	40
	Ammonium hydrogendifluoride, solid	8	UN1727	II	8	B106, N34	154	212	240	15 kg	50 kg	A	25, 26, 40
	Ammonium hydrogendifluoride, solution.	8	UN2817	II	8, 6.1	N34, T15	None	202	243	1 L	30 L	B	40
	.....	.....		III	8, 6.1	T8	154	203	241	5 L	60 L	B	40, 95
	Ammonium hydrosulfide, solution, see Ammonium sulfide solution.	.....			.....		.....	.....	.....	.....	.....		
D	Ammonium hydroxide, *see* Ammonia solutions, *etc.*	.....			.....		.....	.....	.....	.....	.....		

	Ammonium metavanadate	6.1	UN2859	II	6.1		None	212	242	25 kg	100 kg	A	
D	Ammonium nitrate fertilizers	5.1	NA2072	III	5.1	7	152	213	240	25 kg	100 kg	B	48, 59, 60, 117
	Ammonium nitrate fertilizers*; uniform non-segregating mixtures of ammonium nitrate with added matter which is inorganic and chemically inert towards ammonium nitrate, with not less than 90 percent ammonium nitrate and not more than 0.2 percent combustible material (including organic material calculated as carbon), or with more than 70 percent but less than 90 percent ammonium nitrate and not more than 0.4 percent total combustible material.*.	5.1	UN2067	III	5.1	52	152	213	240	25 kg	100 kg	B	48, 59, 60, 117
AW	Ammonium nitrate fertilizers: *uniform non-segregating mixtures of nitrogen/phosphate or nitrogen/potash types or complete fertilizers of nitrogen/ phosphate/potash type, with not more than 70 percent ammonium nitrate and not more than 0.4 percent total added combustible material or with not more than 45 percent ammonium nitrate with unrestricted combustible material.*	9	UN2071	III	9		155	213	240	200 kg	200 kg	A	
D	Ammonium nitrate-fuel oil mixture *containing only prilled ammonium nitrate and fuel oil.*	1.5D	NA0331	II	1.5D ...		None	62	None ..	Forbidden	Forbidden	B	1E, 5E
	Ammonium nitrate, liquid *(hot concentrated solution).*	5.1	UN2426		5.1	B5, B100, T25	None	None ..	243	Forbidden	Forbidden	D	59, 60
D	Ammonium nitrate mixed fertlizers ...	5.1	NA2069	III	5.1	10	152	213	240	25 kg	100 kg	B	48, 59, 60, 117
	Ammonium nitrate, *with more than 0.2 percent combustible substances, including any organic substance calculated as carbon, to the exclusion of any other added substance.*	1.1D	UN0222	II	1.1D ...		None	62	None ..	Forbidden	Forbidden	B	1E, 5E, 19E
	Ammonium nitrate, *with not more than 0.2 percent of combustible substances, including any organic substance calculated as carbon, to the exclusion of any other added substance.*	5.1	UN1942	III	5.1	A1, A29	152	213	240	25 kg	100 kg	A	48, 59, 60, 116
	Ammonium nitrite	Forbidden			.....		.....	.....	.....	.....	.....		

§172.101 HAZARDOUS MATERIALS TABLE—Continued

Symbols	Hazardous materials descriptions and proper shipping names	Hazard class or Division	Identification Numbers	PG	Label Codes	Special provisions	(8) Packaging (§173.***)			(9) Quantity limitations		(10) Vessel stowage	
							Exceptions	Nonbulk	Bulk	Passenger aircraft/rail	Cargo aircraft only	Location	Other
(1)	(2)	(3)	(4)	(5)	(6)	(7)	(8A)	(8B)	(8C)	(9A)	(9B)	(10A)	(10B)
	Ammonium perchlorate	1.1D	UN0402	II	1.1D	107	None	62	None	Forbidden	Forbidden	B	1E, 5E, 19E
	Ammonium perchlorate	5.1	UN1442	II	5.1	107, A9	152	212	242	5 kg	25 kg	E	58, 69, 106
	Ammonium permanganate	Forbidden											
	Ammonium persulfate	5.1	UN1444	III	5.1	A1, A29	152	213	240	25 kg	100 kg	A	
	Ammonium picrate, *dry or wetted with less than 10 percent water, by mass.*	1.1D	UN0004	II	1.1D		None	62	None	Forbidden	Forbidden	B	1E, 5E, 19E
	Ammonium picrate, wetted *with not less than 10 percent water, by mass.*	4.1	UN1310	I	4.1	23, A2, N41	None	211	None	0.5 kg	0.5 kg	D	28, 36
	Ammonium polysulfide, solution	8	UN2818	II	8, 6.1	T14	None	202	243	1 L	30 L	B	12, 26, 40
				III	8, 6.1	T7	154	203	241	5 L	60 L	B	12, 26, 40
	Ammonium polyvanadate	6.1	UN2861	II	6.1		None	212	242	25 kg	100 kg	A	
	Ammonium silicofluoride, see Ammonium fluorosilicate.												
	Ammonium sulfide solution	8	UN2683	II	8, 6.1, 3.	T14	None	202	243	1 L	30 L	B	12, 22, 26, 100
	Ammunition, blank, see Cartridges for weapons, blank.												
	Ammunition, illuminating *with or without burster, expelling charge or propelling charge.*	1.2G	UN0171	II	1.2G			62	None	Forbidden	Forbidden	B	
	Ammunition, illuminating *with or without burster, expelling charge or propelling charge.*	1.3G	UN0254	II	1.3G			62	None	Forbidden	Forbidden	B	
	Ammunition, illuminating *with or without burster, expelling charge or propelling charge.*	1.4G	UN0297	II	1.4G			62	None	Forbidden	75 kg	A	24E
	Ammunition, incendiary *liquid or gel, with burster, expelling charge or propelling charge.*	1.3J	UN0247	II	1.3J			62	None	Forbidden	Forbidden	E	7E, 13E, 23E

Ammunition, incendiary (water-activated contrivances) with burster, expelling charge or propelling charge, see Contrivances, water-activated, etc.	.....			.....		.....	.....	.....	.....	.....		
Ammunition, incendiary, white phosphorus, *with burster, expelling charge or propelling charge.*	1.2H	UN0243	II	1.2H ...		.....	62	None ..	Forbidden	Forbidden	E	8E, 14E, 15E, 17E
Ammunition, incendiary, white phosphorus, *with burster, expelling charge or propelling charge.*	1.3H	UN0244	II	1.3H ...		.....	62	None ..	Forbidden	Forbidden	E	8E, 14E, 15E, 17E
Ammunition, incendiary *with or without burster, expelling charge, or propelling charge.*	1.2G	UN0009	II	1.2G ...		.....	62	None ..	Forbidden	Forbidden	B	
Ammunition, incendiary *with or without burster, expelling charge, or propelling charge.*	1.3G	UN0010	II	1.3G ...		.....	62	None ..	Forbidden	Forbidden	B	
Ammunition, incendiary *with or without burster, expelling charge or propelling charge.*	1.4G	UN0300	II	1.4G ...		.....	62	None ..	Forbidden	75 kg	A	24E
Ammunition, practice	1.4G	UN0362	II	1.4G ...		.....	62	None ..	Forbidden	75 kg	A	24E
Ammunition, practice	1.3G	UN0488	II	1.3G ...		.....	62	None ..	Forbidden	Forbidden	B	
Ammunition, proof	1.4G	UN0363	II	1.4G ...		.....	62	None ..	Forbidden	75 kg	A	24E
Ammunition, rocket, see Warheads, rocket *etc.*	.....			.....		.....	.....	.....	.....	.....		
Ammunition, SA (small arms), see Cartridges for weapons, *etc.*	.....			.....		.....	.....	.....	.....	.....		
Ammunition, smoke (water-activated contrivances), white phosphorus, with burster, expelling charge or propelling charge, see Contrivances, water-activated, *etc. (UN 0248).*	.....			.....		.....	.....	.....	.....	.....		
Ammunition, smoke (water-activated contrivances), without white phosphorus or phosphides, with burster, expelling charge or propelling charge, see Contrivances, water-activated, *etc. (UN 0249).*	.....			.....		.....	.....	.....	.....	.....		
Ammunition smoke, white phosphorus *with burster,expelling charge, or propelling charge.*	1.2H	UN0245	II	1.2H ...		.....	62	None ..	Forbidden	Forbidden	E	8E, 14E, 15E, 17E
Ammunition, smoke, white phosphorus *with burster, expelling charge, or propelling charge.*	1.3H	UN0246	II	1.3H ...		.....	62	None ..	Forbidden	Forbidden	E	8E, 14E, 15E, 17E

§172.101 HAZARDOUS MATERIALS TABLE—Continued

Symbols	Hazardous materials descriptions and proper shipping names	Hazard class or Division	Identification Numbers	PG	Label Codes	Special provisions	(8) Packaging (§173.***)			(9) Quantity limitations		(10) Vessel stowage	
							Exceptions	Non-bulk	Bulk	Passenger aircraft/rail	Cargo aircraft only	Location	Other
(1)	(2)	(3)	(4)	(5)	(6)	(7)	(8A)	(8B)	(8C)	(9A)	(9B)	(10A)	(10B)
	Ammunition, smoke *with or without burster, expelling charge or propelling charge.*	1.2G	UN0015	II	1.2G, 8		.....	62	None ..	Forbidden	Forbidden	E	17E, 20E
	Ammunition, smoke *with or without burster, expelling charge or propelling charge.*	1.3G	UN0016	II	1.3G, 8		.....	62	None ..	Forbidden	Forbidden	E	17E, 20E
	Ammunition, smoke *with or without burster, expelling charge or propelling charge.*	1.4G	UN0303	II	1.4G, 8		.....	62	None ..	Forbidden	75 kg	E	17E, 20E
	Ammunition, sporting, see Cartridges for weapons, *etc. (UN 0012; UN 0328; UN 0339).*	.....			.....		.....	.....	.....	.....	.....		
	Ammunition, tear-producing, non-explosive, *without burster or expelling charge, non-fuzed.*	6.1	UN2017	II	6.1, 8		None	212	None ..	Forbidden	50 kg	E	13, 40
	Ammunition, tear-producing *with burster, expelling charge or propelling charge.*	1.2G	UN0018	II	1.2G, 8, 6.1.		.....	62	None ..	Forbidden	Forbidden	E	20E
	Ammunition, tear-producing *with burster, expelling charge or propelling charge.*	1.3G	UN0019	II	1.3G, 8, 6.1.		.....	62	None ..	Forbidden	Forbidden	E	17E, 20E
	Ammunition, tear-producing *with burster, expelling charge or propelling charge.*	1.4G	UN0301	II	1.4G, 8, 6.1.		.....	62	None ..	Forbidden	75 kg	E	17E, 20E
	Ammunition, toxic, non-explosive, *without burster or expelling charge, non-fuzed.*	6.1	UN2016	II	6.1		None	212	None ..	Forbidden	100 kg	E	13, 40
	Ammunition, toxic (water-activated contrivances), with burster, expelling charge or propelling charge, see Contrivances, water-activated, *etc.*	.....			.....		.....	.....	.....	.....	.....		
	Ammunition, toxic *with burster, expelling charge, or propelling charge.*	1.2K	UN0020	II	1.2K, 6.1.		.....	62	None ..	Forbidden	Forbidden	E	2E, 8E, 11E, 17E
	Ammunition, toxic *with burster, expelling charge, or propelling charge.*	1.3K	UN0021	II	1.3K, 6.1.		.....	62	None ..	Forbidden	Forbidden	E	2E, 8E, 11E, 17E
	Amyl acetates	3	UN1104	III	3	B1, T1	150	203	242	60 L	220 L	A	

	Amyl acid phosphate	8	UN2819	III	8	T7	154	203	241	5 L	60 L	A	
	Amyl alcohols	3	UN1105	II	3	T1	150	202	242	5 L	60 L	B	
				III	3	B1, B3, T1	150	203	242	60 L	220 L	A	
	Amyl butyrates	3	UN2620	III	3	B1, T1	150	203	242	60 L	220 L	A	
	Amyl chlorides	3	UN1107	II	3	T1	150	202	242	5 L	60 L	B	
	Amyl formates	3	UN1109	III	3	B1, T1	150	203	242	60 L	220 L	A	
	Amyl mercaptans	3	UN1111	II	3	A3, T8	None	202	242	5 L	60 L	B	95, 102
	n-Amyl methyl ketone	3	UN1110	III	3	B1, T1	150	203	242	60 L	220 L	A	
	Amyl nitrate	3	UN1112	III	3	B1, T1	150	203	242	60 L	220 L	A	40
	Amyl nitrites	3	UN1113	II	3	T8	150	202	242	5 L	60 L	E	40
	Amylamines	3	UN1106	II	3, 8	T1	None	202	243	1 L	5 L	B	
				III	3, 8	B1	150	203	242	5 L	60 L	A	
	Amyltrichlorosilane	8	UN1728	II	8	A7, B2, B6, N34, T8, T26	None	202	242	Forbidden	30 L	C	40
	Anhydrous ammonia *see Ammonia, anhydrous, liquefied.*												
	Anhydrous hydrofluoric acid, see Hydrogen fluoride, anhydrous.												
+	Aniline	6.1	UN1547	II	6.1	T8	None	202	243	5 L	60 L	A	40
	Aniline hydrochloride	6.1	UN1548	III	6.1		153	213	240	100 kg	200 kg	A	
	Aniline oil, see Aniline												
	Anisidines	6.1	UN2431	III	6.1	T1	153	203	241	60 L	220 L	A	
	Anisole	3	UN2222	III	3	B1, T1	150	203	242	60 L	220 L	A	
	Anisoyl chloride	8	UN1729	II	8	B2, T8	154	202	242	1 L	30 L	C	40
	Anti-freeze, liquid, see Flammable liquids, n.o.s.												
	Antimonous chloride, see Antimony trichloride.												
	Antimony compounds, inorganic, liquid, n.o.s.	6.1	UN3141	III	6.1	35, T7	153	203	241	60 L	220 L	A	
	Antimony compounds, inorganic, solid, n.o.s.	6.1	UN1549	III	6.1	35	153	213	240	100 kg	200 kg	A	
	Antimony lactate	6.1	UN1550	III	6.1		153	213	240	100 kg	200 kg	A	
	Antimony pentachloride, liquid	8	UN1730	II	8	B2, T8, T26	None	202	242	1 L	30 L	C	40
	Antimony pentachloride, solutions	8	UN1731	II	8	B2, T8, T27	154	202	242	1 L	30 L	C	40
				III	8	T7, T26	154	203	241	5 L	60 L	C	40
	Antimony pentafluoride	8	UN1732	II	8, 6.1	A3, A6, A7, A10, N3, T12, T26	None	202	243	Forbidden	30 L	D	40
	Antimony potassium tartrate	6.1	UN1551	III	6.1		153	213	240	100 kg	200 kg	A	
	Antimony powder	6.1	UN2871	III	6.1		153	213	240	100 kg	200 kg	A	
	Antimony sulfide and a chlorate, mixtures of.	Forbidden											
	Antimony sulfide, solid, see Antimony compounds, inorganic, n.o.s.												
D	Antimony tribromide, solid	8	NA1549	II	8		154	212	240	25 kg	100 kg	A	13
D	Antimony tribromide, solution	8	NA1549	II	8	B2	154	202	242	1 L	30 L	C	13
	Antimony trichloride, liquid	8	UN1733	II	8	B2	154	202	242	1 L	30 L	C	40
	Antimony trichloride, solid	8	UN1733	II	8	B106	154	212	240	15 kg	50 kg	A	40
D	Antimony trifluoride, solid	8	NA1549	II	8		154	212	240	25 kg	25 kg	A	13

§172.101 HAZARDOUS MATERIALS TABLE—Continued

Symbols	Hazardous materials descriptions and proper shipping names	Hazard class or Division	Identification Numbers	PG	Label Codes	Special provisions	(8) Packaging (§173.***)			(9) Quantity limitations		(10) Vessel stowage	
							Exceptions	Nonbulk	Bulk	Passenger aircraft/rail	Cargo aircraft only	Location	Other
(1)	(2)	(3)	(4)	(5)	(6)	(7)	(8A)	(8B)	(8C)	(9A)	(9B)	(10A)	(10B)
D	Antimony trifluoride, solution	8	NA1549	II	8	B2	154	202	242	1 L	30 L	C	13
	Aqua ammonia, see Ammonia solution, *etc.*												
	Argon, compressed	2.2	UN1006		2.2		306	302	314, 315.	75 kg	150 kg	A	
	Argon, refrigerated liquid *(cryogenic liquid).*	2.2	UN1951		2.2		320	316	318	50 kg	500 kg	B	
	Arsenic	6.1	UN1558	II	6.1		None	212	242	25 kg	100 kg	A	
	Arsenic acid, liquid	6.1	UN1553	I	6.1	T18, T27	None	201	243	1 L	30 L	B	46
	Arsenic acid, solid	6.1	UN1554	II	6.1		None	212	242	25 kg	100 kg	A	
	Arsenic bromide	6.1	UN1555	II	6.1		None	212	242	25 kg	100 kg	A	12, 40
	Arsenic chloride, see Arsenic trichloride.												
	Arsenic compounds, liquid, n.o.s. *inorganic, including arsenates, n.o.s.; arsenites, n.o.s.; arsenic sulfides, n.o.s.; and organic compounds of arsenic, n.o.s.*.	6.1	UN1556	I	6.1		None	201	243	1 L	30 L	B	40
				II	6.1		None	202	243	5 L	60 L	B	40
				III	6.1		153	203	241	60 L	220 L	B	40
	Arsenic compounds, solid, n.o.s. *inorganic, including arsenates, n.o.s.; arsenites, n.o.s.; arsenic sulfides, n.o.s.; and organic compounds of arsenic, n.o.s.*.	6.1	UN1557	I	6.1		None	211	242	5 kg	50 kg	A	
				II	6.1		None	212	242	25 kg	100 kg	A	
				III	6.1		153	213	240	100 kg	200 kg	A	
	Arsenic pentoxide	6.1	UN1559	II	6.1		None	212	242	25 kg	100 kg	A	
D	Arsenic sulfide	6.1	NA1557	II	6.1		None	212	242	25 kg	100 kg	A	
	Arsenic sulfide and a chlorate, mixtures of.	Forbidden											
	Arsenic trichloride	6.1	UN1560	I	6.1	2, B9, B14, B32, B74, T38, T43, T45	None	227	244	Forbidden	Forbidden	B	40
	Arsenic trioxide	6.1	UN1561	II	6.1		None	212	242	25 kg	100 kg	A	
D	Arsenic trisulfide	6.1	NA1557	II	6.1		None	212	242	25 kg	100 kg	A	
	Arsenic, white, solid, see Arsenic trioxide.												
	Arsenical dust	6.1	UN1562	II	6.1		None	212	242	25 kg	100 kg	A	

Arsenical pesticides, liquid, flammable, toxic, *flash point less than 23 degrees C.*	3	UN2760	I	3, 6.1		None	201	243	Forbidden	30 L	B	40
.....	.....		II	3, 6.1		None	202	243	1 L	60 L	B	40
Arsenical pesticides, liquid, toxic	6.1	UN2994	I	6.1	T42	None	201	243	1 L	30 L	B	40
.....	.....		II	6.1	T14	None	202	243	5 L	60 L	B	40
.....	.....		III	6.1	T14	153	203	241	60 L	220 L	A	40
Arsenical pesticides, liquid, toxic, flammable *flashpoint not less than 23 degrees C.*	6.1	UN2993	I	6.1, 3	T42	None	201	243	1 L	30 L	B	40
.....	.....		II	6.1, 3	T14	None	202	243	5 L	60 L	B	40
.....	.....		III	6.1, 3	B1, T14	153	203	242	60 L	220 L	A	40
Arsenical pesticides, solid, toxic	6.1	UN2759	I	6.1		None	211	242	5 kg	50 kg	A	40
.....	.....		II	6.1		None	212	242	25 kg	100 kg	A	40
.....	.....		III	6.1		153	213	240	100 kg	200 kg	A	40
Arsenious acid, solid, see Arsenic trioxide.	.....			.....		.....	.....	.....	.....	.....		
Arsenious and mercuric iodide solution, see Arsenic compounds, liquid, n.o.s.	.....			.....		.....	.....	.....	.....	.....		
Arsine	2.3	UN2188		2.3, 2.1.	1	None	192	245	Forbidden	Forbidden	D	40
Articles, explosive, extremely insensitive *or* Articles, EEI.	1.6N	UN0486	II	1.6N	101	None	62	None	Forbidden	Forbidden	B	
Articles, explosive, n.o.s	1.4S	UN0349	II	1.4S	101	None	62	None	25 kg	100 kg	A	
Articles, explosive, n.o.s	1.4B	UN0350	II	1.4B	101	None	62	None	Forbidden	Forbidden	A	24E
Articles, explosive, n.o.s	1.4C	UN0351	II	1.4C	101	None	62	None	Forbidden	Forbidden	A	24E
Articles, explosive, n.o.s	1.4D	UN0352	II	1.4D	101	None	62	None	Forbidden	Forbidden	A	24E
Articles, explosive, n.o.s	1.4G	UN0353	II	1.4G	101	None	62	None	Forbidden	Forbidden	A	24E
Articles, explosive, n.o.s	1.1L	UN0354	II	1.1L	101	None	62	None	Forbidden	Forbidden	E	2E, 8E, 11E, 17E
Articles, explosive, n.o.s	1.2L	UN0355	II	1.2L	101	None	62	None	Forbidden	Forbidden	E	2E, 8E, 11E, 17E
Articles, explosive, n.o.s	1.3L	UN0356	II	1.3L	101	None	62	None	Forbidden	Forbidden	E	2E, 8E, 11E, 17E
Articles, explosive, n.o.s	1.1C	UN0462	II	1.1C	101	None	62	None	Forbidden	Forbidden	B	
Articles, explosive, n.o.s	1.1D	UN0463	II	1.1D	101	None	62	None	Forbidden	Forbidden	B	
Articles, explosive, n.o.s	1.1E	UN0464	II	1.1E	101	None	62	None	Forbidden	Forbidden	B	
Articles, explosive, n.o.s	1.1F	UN0465	II	1.1F	101	None	62	None	Forbidden	Forbidden	E	
Articles, explosive, n.o.s	1.2C	UN0466	II	1.2C	101	None	62	None	Forbidden	Forbidden	B	
Articles, explosive, n.o.s	1.2D	UN0467	II	1.2D	101	None	62	None	Forbidden	Forbidden	B	
Articles, explosive, n.o.s	1.2E	UN0468	II	1.2E	101	None	62	None	Forbidden	Forbidden	B	
Articles, explosive, n.o.s	1.2F	UN0469	II	1.2F	101	None	62	None	Forbidden	Forbidden	E	
Articles, explosive, n.o.s	1.3C	UN0470	II	1.3C	101	None	62	None	Forbidden	Forbidden	B	
Articles, explosive, n.o.s	1.4E	UN0471	II	1.4E	101	None	62	None	Forbidden	75 kg	A	24E
Articles, explosive, n.o.s	1.4F	UN0472	II	1.4F	101	None	62	None	Forbidden	Forbidden	E	

§172.101 HAZARDOUS MATERIALS TABLE—Continued

Symbols	Hazardous materials descriptions and proper shipping names	Hazard class or Division	Identification Numbers	PG	Label Codes	Special provisions	(8) Packaging (§173.***)			(9) Quantity limitations		(10) Vessel stowage	
							Exceptions	Nonbulk	Bulk	Passenger aircraft/rail	Cargo aircraft only	Location	Other
(1)	(2)	(3)	(4)	(5)	(6)	(7)	(8A)	(8B)	(8C)	(9A)	(9B)	(10A)	(10B)
	Articles, pressurized pneumatic *or* Hydraulic *containing non-flammable gas.*	2.2	UN3164		2.2		306	302, 304.	None	No limit	No limit	A	
	Articles, pyrophoric	1.2L	UN0380	II	1.2L		None	62	None	Forbidden	Forbidden	E	2E, 8E, 11E, 17E
	Articles, pyrotechnic *for technical purposes.*	1.1G	UN0428	II	1.1G		None	62	None	Forbidden	Forbidden	B	
	Articles, pyrotechnic *for technical purposes.*	1.2G	UN0429	II	1.2G		None	62	None	Forbidden	Forbidden	B	
	Articles, pyrotechnic *for technical purposes.*	1.3G	UN0430	II	1.3G		None	62	None	Forbidden	Forbidden	B	
	Articles, pyrotechnic *for technical purposes.*	1.4G	UN0431	II	1.4G		None	62	None	Forbidden	75 kg	A	24E
	Articles, pyrotechnic *for technical purposes.*	1.4S	UN0432	II	1.4S		None	62	None	25 kg	100 kg	A	
D	Asbestos	9	NA2212	III	9		155	216	240	200 kg	200 kg	A	34, 40
	Ascaridole (organic peroxide)	Forbidden											
D	Asphalt, *at or above its flashpoint*	3	NA1999	III	3		150	203	247	Forbidden	Forbidden	D	
D	Asphalt, cut back, *see* Tars, liquid, *etc.*												
	Automobile, motorcycle, tractor, or other self-propelled vehicle, engine, or other mechanical apparatus. see Engines *or* Battery *etc.*												
	Azaurolic acid (salt of) (dry)	Forbidden											
	Azido guanidine picrate (dry)	Forbidden											
	5-Azido-1-hydroxy tetrazole	Forbidden											
	Azido hydroxy tetrazole (mercury and silver salts).	Forbidden											
	3-Azido-1,2-Propylene glycol dinitrate.	Forbidden											
	Azidodithiocarbonic acid	Forbidden											
	Azidoethyl nitrate	Forbidden											
	1-Aziridinylphosphine oxide-(tris), see Tris-(1-aziridinyl) phosphine oxide, solution.												
	Azodicarbonamide	4.1	UN3242	II	4.1	38	151	212	240	Forbidden	Forbidden	D	12, 61, 74
	Azotetrazole (dry)	Forbidden											

	Barium	4.3	UN1400	II	4.3	A19, B100, B106	151	212	241	15 kg	50 kg	E	
	Barium alloys, pyrophoric	4.2	UN1854	I	4.2		None	181	None	Forbidden	Forbidden	D	
	Barium azide, *dry or wetted with less than 50 percent water, by mass.*	1.1A	UN0224	II	1.1A, 6.1.	111, 117	None	62	None	Forbidden	Forbidden	E	2E, 6E
	Barium azide, wetted *with not less than 50 percent water, by mass.*	4.1	UN1571	I	4.1, 6.1.	A2	None	182	None	Forbidden	0.5 kg	D	28
	Barium bromate	5.1	UN2719	II	5.1, 6.1.		None	212	242	5 kg	25 kg	A	56, 58, 106
	Barium chlorate	5.1	UN1445	II	5.1, 6.1.	A9, N34, T8	None	212	242	5 kg	25 kg	A	56, 58, 106
	Barium compounds, n.o.s	6.1	UN1564	II	6.1		None	212	242	25 kg	100 kg	A	
				III	6.1		153	213	240	100 kg	200 kg	A	
	Barium cyanide	6.1	UN1565	I	6.1	N74, N75	None	211	242	5 kg	50 kg	A	26, 40
	Barium hypochlorite *with more than 22 percent available chlorine.*	5.1	UN2741	II	5.1, 6.1.	A7, A9, N34	152	212	None	5 kg	25 kg	B	56, 58, 106
	Barium nitrate	5.1	UN1446	II	5.1, 6.1.		None	212	242	5 kg	25 kg	A	
	Barium oxide	6.1	UN1884	III	6.1		153	213	240	100 kg	200 kg	A	
	Barium perchlorate	5.1	UN1447	II	5.1, 6.1.	T8	None	212	242	5 kg	25 kg	A	56, 58, 106
	Barium permanganate	5.1	UN1448	II	5.1, 6.1.		None	212	242	5 kg	25 kg	D	56, 58, 69, 106, 107
	Barium peroxide	5.1	UN1449	II	5.1, 6.1.		None	212	242	5 kg	25 kg	A	13, 75, 106
	Barium selenate, see Selenates *or* Selenites.												
	Barium selenite, see Selenates *or* Selenites.												
D	Barium styphnate	1.1A	NA0473	II	1.1A	111, 117	None	62	None	Forbidden	Forbidden	E	2E, 6E
	Batteries, containing sodium	4.3	UN3292	II	4.3		189	189	189	Forbidden	No limit	A	
	Batteries, dry, containing potassium hydroxide solid, *electric, storage.*	8	UN3028	III	8		None	213	None	25 kg gross	230 kg gross	A	
	Batteries, wet, filled with acid, *electric storage.*	8	UN2794	III	8		159	159	159	25 kg gross	No limit	A	
	Batteries, wet, filled with alkali, *electric storage.*	8	UN2795	III	8		159	159	159	25 kg gross	No limit	A	
	Batteries, wet, non-spillable, *electric storage.*	8	UN2800	III	8		159	159	159	No Limit	No Limit	A	
	Battery, dry, not subject to the requirements of this subchapter.												
	Battery fluid, acid	8	UN2796	II	8	A3, A7, B2, B15, N6, N34, T9, T27	154	202	242	1 L	30 L	B	
	Battery fluid, alkali	8	UN2797	II	8	B2, N6, T8	154	202	242	1 L	30 L	A	
	Battery lithium type, see Lithium batteries *etc.*												
	Battery-powered vehicle *or* Battery-powered equipment.	9	UN3171		9		220	220	None	No limit	No limit		

§172.101 HAZARDOUS MATERIALS TABLE—Continued

Symbols	Hazardous materials descriptions and proper shipping names	Hazard class or Division	Identification Numbers	PG	Label Codes	Special provisions	(8) Packaging (§173.***) Exceptions	Non-bulk	Bulk	(9) Quantity limitations Passenger aircraft/rail	Cargo aircraft only	(10) Vessel stowage Location	Other
(1)	(2)	(3)	(4)	(5)	(6)	(7)	(8A)	(8B)	(8C)	(9A)	(9B)	(10A)	(10B)
	Battery, wet, filled with acid or alkali with automobile (or named self-propelled vehicle or mechanical equipment containing internal combustion engine) see Vehicles, self-propelled *etc.*	.....			.....		.....	.....	.....	.....	.....		
	Battery, wet, with wheelchair, see Wheelchair, electric.	.....			.....		.....	.....	.....	.....	.....		
+	Benzaldehyde	9	UN1990	III	9	T1	155	203	241	100 L	220 L	A	
	Benzene	3	UN1114	II	3	B101, T8	150	202	242	5 L	60 L	B	40
	Benzene diazonium chloride (dry)	Forbidden			.....		.....	.....	.....	.....	.....		
	Benzene diazonium nitrate (dry)	Forbidden			.....		.....	.....	.....	.....	.....		
	Benzene phosphorus dichloride, see Phenyl phosphorus dichloride.	.....			.....		.....	.....	.....	.....	.....		
	Benzene phosphorus thiodichloride, see Phenyl phosphorus thiodichloride.	.....			.....		.....	.....	.....	.....	.....		
	Benzene sulfonyl chloride	8	UN2225	III	8	T8	154	203	241	5 L	60 L	A	40
	Benzene triozonide	Forbidden			.....		.....	.....	.....	.....	.....		
	Benzenethiol, see Phenyl mercaptan	.....			.....		.....	.....	.....	.....	.....		
	Benzidine	6.1	UN1885	II	6.1		None	212	242	25 kg	100 kg	A	
	Benzoic derivative pesticides, liquid, flammable, toxic, *flash point less than 23 degrees C.*	3	UN2770	I	3, 6.1		None	201	243	Forbidden	30 L	E	
	.....	.....		II	3, 6.1		None	202	243	1 L	60 L	B	40
	Benzoic derivative pesticides, liquid, toxic.	6.1	UN3004	I	6.1	T42	None	201	243	1 L	30 L	B	40
	.....	.....		II	6.1	T14	None	202	243	5 L	60 L	B	40
	.....	.....		III	6.1	T14	153	203	241	60 L	220 L	A	40
	Benzoic derivative pesticides, liquid, toxic, flammable, *flashpoint not less than 23 degrees C.*	6.1	UN3003	I	6.1, 3	T42	None	201	243	1 L	30 L	B	40
	.....	.....		II	6.1, 3	T14	None	202	243	5 L	60 L	B	40
	.....	.....		III	6.1, 3	T14	153	203	242	60 L	220 L	A	40
	Benzoic derivative pesticides, solid, toxic.	6.1	UN2769	I	6.1		None	211	242	5 kg	50 kg	A	40
	.....	.....		II	6.1		None	212	242	25 kg	100 kg	A	40
	.....	.....		III	6.1		153	213	240	100 kg	200 kg	A	40
	Benzol, see Benzene	.....			.....		.....	.....	.....	.....	.....		

Benzonitrile	6.1	UN2224	II	6.1	T14	None	202	243	5 L	60 L	A	26, 40
Benzoquinone	6.1	UN2587	II	6.1		None	212	242	25 kg	100 kg	A	
Benzotrichloride	8	UN2226	II	8	B2, B101, T15	154	202	242	1 L	30 L	A	40
Benzotrifluoride	3	UN2338	II	3	T2	150	202	242	5 L	60 L	B	40
Benzoxidiazoles (dry)	Forbidden											
Benzoyl azide	Forbidden											
Benzoyl chloride	8	UN1736	II	8	B2, T9, T26	154	202	242	1 L	30 L	C	40
Benzyl bromide	6.1	UN1737	II	6.1, 8	A3, A7, N33, N34, T12, T26	None	202	243	1 L	30 L	D	13, 40
Benzyl chloride	6.1	UN1738	II	6.1, 8	A3, A7, B70, N33, N42, T12, T26	None	202	243	1 L	30 L	D	13, 40
Benzyl chloride *unstabilized*	6.1	UN1738	II	6.1, 8	A3, A7, B8, B11, N33, N34, N43, T12, T26	None	202	243	1 L	30 L	D	13, 40
Benzyl chloroformate	8	UN1739	I	8	A3, A6, B4, N41, T18, T26	None	201	243	Forbidden	2.5 L	D	40
Benzyl iodide	6.1	UN2653	II	6.1	T8	None	202	243	5 L	60 L	B	12, 40
Benzyldimethylamine	8	UN2619	II	8, 3	B2, T1	154	202	243	1 L	30 L	A	40, 48
Benzylidene chloride	6.1	UN1886	II	6.1	T8	None	202	243	5 L	60 L	D	40
Beryllium compounds, n.o.s	6.1	UN1566	II	6.1		None	212	242	25 kg	100 kg	A	
			III	6.1		153	213	240	100 kg	200 kg	A	
Beryllium nitrate	5.1	UN2464	II	5.1, 6.1.		None	212	242	5 kg	25 kg	A	
Beryllium, powder	6.1	UN1567	II	6.1, 4.1.		None	212	242	15 kg	50 kg	A	
Biphenyl triozonide	Forbidden											
Bipyridilium pesticides, liquid, flammable, toxic, *flash point less than 23 degrees C.*	3	UN2782	I	3, 6.1		None	201	243	Forbidden	30 L	E	
			II	3, 6.1		None	202	243	1 L	60 L	B	40
Bipyridilium pesticides, liquid, toxic	6.1	UN3016	I	6.1	T42	None	201	243	1 L	30 L	B	40
			II	6.1	T14	None	202	243	5 L	60 L	B	40
			III	6.1	T14	153	203	241	60 L	220 L	A	40
Bipyridilium pesticides, liquid, toxic, flammable, *flashpoint not less than 23 degrees C.*	6.1	UN3015	I	6.1, 3	T42	None	201	243	1 L	30 L	B	21, 40
			II	6.1, 3	T14	None	202	243	5 L	60 L	B	21, 40
			III	6.1, 3	B1, T14	153	203	242	60 L	220 L	A	21, 40
Bipyridilium pesticides, solid, toxic	6.1	UN2781	I	6.1		None	211	242	5 kg	50 kg	A	40
			II	6.1		None	212	242	25 kg	100 kg	A	40
			III	6.1		153	213	240	100 kg	200 kg	A	40
Bis (Aminopropyl) piperazine, see Corrosive liquid, n.o.s.												
Bisulfate, aqueous solution	8	UN2837	II	8	A7, B2, N34, T8, T26	154	202	242	1 L	30 L	A	
			III	8	A7, N34, T7, T26	154	203	241	5 L	60 L	A	
Bisulfites, aqueous solutions, n.o.s	8	UN2693	III	8	T8	154	203	241	1 L	30 L	A	26, 40

§172.101 HAZARDOUS MATERIALS TABLE—Continued

Symbols	Hazardous materials descriptions and proper shipping names	Hazard class or Division	Identification Numbers	PG	Label Codes	Special provisions	(8) Packaging (§173.***)			(9) Quantity limitations		(10) Vessel stowage	
							Exceptions	Nonbulk	Bulk	Passenger aircraft/rail	Cargo aircraft only	Location	Other
(1)	(2)	(3)	(4)	(5)	(6)	(7)	(8A)	(8B)	(8C)	(9A)	(9B)	(10A)	(10B)
	Black powder, compressed *or* Gunpowder, compressed *or* Black powder, in pellets *or* Gunpowder, in pellets.	1.1D	UN0028	II	1.1D		None	62	None	Forbidden	Forbidden	B	1E, 5E
	Black powder *or* Gunpowder, *granular or as a meal.*	1.1D	UN0027	II	1.1D		None	62	None	Forbidden	Forbidden	B	10E, 26E
D	Black powder for small arms	4.1	NA0027	I	4.1	70	None	170	None	Forbidden	Forbidden	E	
	Blasting agent, n.o.s., see Explosives, blasting *etc.*												
	Blasting cap assemblies, see Detonator assemblies, non-electric, *for blasting.*												
	Blasting caps, electric, see Detonators, electric *for blasting.*												
	Blasting caps, non-electric, see Detonators, non-electric, *for blasting.*												
	Bleaching powder, see Calcium hypochlorite mixtures, *etc.*												
I	Blue asbestos *(Crocidolite) or* Brown asbestos *(amosite, mysorite).*	9	UN2212	II	9		155	216	240	Forbidden	Forbidden	A	34, 40
	Bombs, photo-flash	1.1F	UN0037	II	1.1F			62	None	Forbidden	Forbidden	E	
	Bombs, photo-flash	1.1D	UN0038	II	1.1D			62	None	Forbidden	Forbidden	B	
	Bombs, photo-flash	1.2G	UN0039	II	1.2G			62	None	Forbidden	Forbidden	B	
	Bombs, photo-flash	1.3G	UN0299	II	1.3G			62	None	Forbidden	Forbidden	B	
	Bombs, smoke, non-explosive, *with corrosive liquid, without initiating device.*	8	UN2028	II	8		None	160	None	Forbidden	50 kg	E	40
	Bombs, *with bursting charge*	1.1F	UN0033	II	1.1F			62	None	Forbidden	Forbidden	E	
	Bombs, *with bursting charge*	1.1D	UN0034	II	1.1D			62	None	Forbidden	Forbidden	B	3E, 7E
	Bombs, *with bursting charge*	1.2D	UN0035	II	1.2D			62	None	Forbidden	Forbidden	B	3E, 7E
	Bombs, *with bursting charge*	1.2F	UN0291	II	1.2F			62	None	Forbidden	Forbidden	E	
	Bombs with flammable liquid, *with bursting charge.*	1.1J	UN0399	II	1.1J			62	None	Forbidden	Forbidden	E	7E, 16E, 23E
	Bombs with flammable liquid, *with bursting charge.*	1.2J	UN0400	II	1.2J			62	None	Forbidden	Forbidden	E	7E, 16E, 23E
	Boosters with detonator	1.1B	UN0225	II	1.1B		None	62	None	Forbidden	Forbidden	B	2E, 6E
	Boosters with detonator	1.2B	UN0268	II	1.2B		None	62	None	Forbidden	Forbidden	E	1E, 7E

	Boosters, *without detonator*	1.1D	UN0042	II	1.1D		None	62	None	Forbidden	Forbidden	B	
	Boosters, *without detonator*	1.2D	UN0283	II	1.2D		None	62	None	Forbidden	Forbidden	B	
	Borate and chlorate mixtures, see Chlorate and borate mixtures.												
	Borneol	4.1	UN1312	III	4.1	A1	None	213	240	25 kg	100 kg	A	
+	Boron tribromide	8	UN2692	I	8, 6.1	2, A3, A7, B9, B14, B32, B74, N34, T38, T43, T45	None	227	244	Forbidden	2.5 L	C	12
	Boron trichloride	2.3	UN1741		2.3, 8	3, B9, B14	None	304	314	Forbidden	Forbidden	D	25, 40
	Boron trifluoride, compressed.	2.3	UN1008		2.3	2, B9, B14	None	302	314, 315.	Forbidden	Forbidden	D	40
	Boron trifluoride acetic acid complex	8	UN1742	II	8	B2, B6, T9, T27	154	202	242	1 L	30 L	A	
	Boron trifluoride diethyl etherate	8	UN2604	I	8, 3	A19, T8, T26	None	201	243	0.5 L	2.5 L	D	40
	Boron trifluoride dihydrate	8	UN2851	II	8	T9, T27	154	212	240	15 kg	50 kg	B	12, 40,
	Boron trifluoride dimethyl etherate	4.3	UN2965	I	4.3, 8, 3.	A19, T12, T26	None	201	243	Forbidden	1 L	D	21, 28, 40, 49, 100
	Boron trifluoride propionic acid complex.	8	UN1743	II	8	B2, T9, T27	154	202	242	1 L	30 L	A	
	Box toe gum, see Nitrocellulose *etc*												
	Bromates, inorganic, aqueous solution, n.o.s.	5.1	UN3213	II	5.1	T8	152	202	242	1 L	5 L	B	56, 58, 106
	Bromates, inorganic, n.o.s	5.1	UN1450	II	5.1		152	212	242	5 kg	25 kg	A	56, 58, 106
	Bromine azide	Forbidden											
+	Bromine *or* Bromine solutions	8	UN1744	I	8, 6.1	1, A3, A6, B9, B64, B85, N34, N43, T18, T41	None	226	249	Forbidden	2.5 L	D	12, 40, 66, 74, 89, 90
	Bromine chloride	2.3	UN2901		2.3, 8, 5.1.	2, B9, B14	None	304	314, 315.	Forbidden	Forbidden	D	40, 89, 90
+	Bromine pentafluoride	5.1	UN1745	I	5.1, 6.1, 8.	1, B9, B14, B30, B72, T38, T43, T44	None	228	244	Forbidden	Forbidden	D	25, 40, 66, 90
+	Bromine trifluoride	5.1	UN1746	I	5.1, 6.1, 8.	2, B9, B14, B32, B74, T38, T43, T45	None	228	244	Forbidden	Forbidden	D	25, 40, 66, 90
	4-Bromo-1,2-dinitrobenzene	Forbidden											
	4-Bromo-1,2-dinitrobenzene (unstable at 59 degrees C.).	Forbidden											
	1-Bromo-3-methylbutane	3	UN2341	III	3	B1, T7, T30	150	203	242	60 L	220 L	A	
	1-Bromo-3-nitrobenzene (unstable at 56 degrees C.	Forbidden											
	2-Bromo-2-nitropropane-1,3-diol	4.1	UN3241	III	4.1	46	151	213	None	25 kg	50 kg	C	12, 25, 40
	Bromoacetic acid, *solid*	8	UN1938	II	8	A7, N34, T9	154	212	240	15 kg	50 kg	A	
	Bromoacetic acid, *solution*	8	UN1938	II	8	B2, T9	154	202	242	1 L	30 L	A	40
+	Bromoacetone	6.1	UN1569	II	6.1,3	2	None	193	245	Forbidden	Forbidden	D	40
	Bromoacetyl bromide	8	UN2513	II	8	B2, T9, T26	154	202	242	1 L	30 L	C	40
	Bromobenzene	3	UN2514	III	3	B1, T1	150	203	242	60 L	220 L	A	

§172.101 HAZARDOUS MATERIALS TABLE—Continued

Symbols	Hazardous materials descriptions and proper shipping names	Hazard class or Division	Identification Numbers	PG	Label Codes	Special provisions	(8) Packaging (§173.***)			(9) Quantity limitations		(10) Vessel stowage	
							Exceptions	Nonbulk	Bulk	Passenger aircraft/rail	Cargo aircraft only	Location	Other
(1)	(2)	(3)	(4)	(5)	(6)	(7)	(8A)	(8B)	(8C)	(9A)	(9B)	(10A)	(10B)
	Bromobenzyl cyanides, *liquid*	6.1	UN1694	I	6.1	T18	None	201	243	Forbidden	30 L	D	12, 40
	Bromobenzyl cyanides, *solid*	6.1	UN1694	I	6.1	T18	None	211	242	Forbidden	50 kg	D	12, 40
	1-Bromobutane	3	UN1126	II	3	T1	150	202	242	5L	60L	B	40
	2-Bromobutane	3	UN2339	II	3	B1, T1	150	202	242	5 L	60 L	B	40
	Bromochloromethane	6.1	UN1887	III	6.1	T7	153	203	241	60 L	220 L	A	
	2-Bromoethyl ethyl ether	3	UN2340	II	3	T7	150	202	242	5 L	60 L	B	40
	Bromoform	6.1	UN2515	III	6.1	T7	153	203	241	60 L	220 L	A	12, 40
	Bromomethylpropanes	3	UN2342	II	3	T7, T30	150	202	242	5 L	60 L	B	
	2-Bromopentane	3	UN2343	II	3	T1	150	202	242	5 L	60 L	B	
	2-Bromopropanes	3	UN2344	II	3	T7	150	202	242	5 L	60 L	B	40
	3-Bromopropyne	3	UN2345	II	3	T8	150	202	242	5 L	60 L	D	40
	Bromosilane	Forbidden											
	Bromotoluene-alpha, see Benzyl bromide.												
	Bromotrifluoroethylene	2.1	UN2419		2.1		None	304	314, 315.	Forbidden	150 kg	B	40
	Bromotrifluoromethane *or* Refrigerant gas, R 13B1..	2.2	UN1009		2.2		306	304	314, 315.	75 kg	150 kg	A	
	Brucine	6.1	UN1570	I	6.1		None	211	242	5 kg	50 kg	A	
	Bursters, *explosive*	1.1D	UN0043	II	1.1D		None	62	None	Forbidden	Forbidden	B	
	Butadienes, inhibited	2.1	UN1010		2.1		306	304	314, 315.	Forbidden	150 kg	B	40
	Butane *see also* Petroleum gases, liquefied.	2.1	UN1011		2.1	19	306	304	314, 315.	Forbidden	150 kg	E	40
	Butane, butane mixtures and mixtures having similar properties in cartridges each not exceeding 500 grams, see Receptacles, *etc.*												
	Butanedione	3	UN2346	II	3	T1	150	202	242	5 L	60 L	B	
	1,2,4-Butanetriol trinitrate	Forbidden											
	Butanols	3	UN1120	II	3	T1	150	202	242	5 L	60 L	B	
				III	3	B1, T1	150	203	242	60 L	220 L	A	
	tert-Butoxycarbonyl azide	Forbidden											
	Butyl acetates	3	UN1123	II	3	T1	150	202	242	5 L	60 L	B	
				III	3	B1, T1	150	203	242	60 L	220 L	A	
	Butyl acid phosphate	8	UN1718	III	8	T7	154	203	241	5 L	60 L	A	
	Butyl acrylates, inhibited	3	UN2348	III	3	B1, T8, T31	150	203	242	60 L	220 L	A	
	Butyl alcohols, see Butanols												
	Butyl benzenes	3	UN2709	III	3	B1, T1	150	203	242	60 L	220 L	A	

	n-Butyl bromide, see 1-Bromobutane	.....		.....	.....	.....	.....	.....	.....	.....	.....		.....
	n-Butyl chloride, see Chlorobutanes	.....			.....		.....	.....	.....	.....	.....		
D	sec-Butyl chloroformate	6.1	NA2742	I	6.1, 3, 8.	2, B9, B14, B32, B74, T38, T43, T45	None	227	244	1 L	30 L	A	12, 13, 22, 25, 40, 48, 100
	n-Butyl chloroformate	6.1	UN2743	I	6.1, 8, 3.	2, B9, B14, B32, B74, T38, T43, T45	None	227	244	1 L	30 L	A	12, 13, 21, 25, 40, 100
	Butyl ethers, see Dibutyl ethers	.....			.....		.....	.....	.....	.....	.....		
	Butyl ethyl ether, see Ethyl butyl ether.	.....			.....		.....	.....	.....	.....	.....		
	n-Butyl formate	3	UN1128	II	3	T1	150	202	242	5 L	60 L	B	
	tert-Butyl hydroperoxide, with more than 90 percent with water.	Forbidden			.....		.....	.....	.....	.....	.....		
	tert-Butyl hypochlorite	4.2	UN3255	I	4.2, 8		None	211	243	Forbidden	Forbidden	D	
	N-n-Butyl imidazole	6.1	UN2690	II	6.1	T8	None	202	243	5 L	60 L	A	
	tert-Butyl isocyanate	6.1	UN2484	I	6.1, 3	1, A7, B9, B14, B30, B72, T38, T43, T44	None	226	244	Forbidden	Forbidden	D	40
	n-Butyl isocyanate	6.1	UN2485	I	6.1, 3	2, A7, B9, B14, B32, B74, B77, T38, T43, T45	None	227	244	Forbidden	30 L	D	40
	Butyl mercaptans	3	UN2347	II	3	A3, T8	150	202	242	5 L	60 L	D	26, 95
	n-Butyl methacrylate, inhibited.	3	UN2227	III	3	B1, T1	150	203	242	60 L	220 L	A	
	Butyl methyl ether	3	UN2350	II	3	T8	150	202	242	5 L	60 L	B	
	Butyl nitrites	3	UN2351	I	3	T8	150	201	243	1 L	30 L	E	40
	.....	.....		II	3	T8	150	202	242	5 L	60 L	B	40
	.....	.....		III	3	B1, T8	150	203	242	60 L	220 L	A	40
	tert-Butyl peroxyacetate, with more than 76 percent in solution.	Forbidden			.....		.....	.....	.....	.....	.....		
	n-Butyl peroxydicarbonate, with more than 52 percent in solution.	Forbidden			.....		.....	.....	.....	.....	.....		
	tert-Butyl peroxyisobutyrate, with more than 77 percent in solution.	Forbidden			.....		.....	.....	.....	.....	.....		
	Butyl phosphoric acid, see Butyl acid phosphate.	.....			.....		.....	.....	.....	.....	.....		
	Butyl propionates	3	UN1914	III	3	B1,T1	150	203	242	60 L	220 L	A	.....
	5-tert-Butyl-2,4,6-trinitro-m-xylene *or* Musk xylene.	4.1	UN2956	III	4.1		None	214	None	Forbidden	Forbidden	D	12
	Butyl vinyl ether, inhibited	3	UN2352	II	3	B101, T7	150	202	242	5 L	60 L	B	40
	n-Butylamine	3	UN1125	II	3, 8	B101, T8	None	202	242	1 L	5 L	B	40
	N-Butylaniline	6.1	UN2738	II	6.1	T8	None	202	243	5 L	60 L	A	
	tert-Butylcyclohexylchloroformate	6.1	UN2747	III	6.1	T8	153	203	241	60 L	220 L	A	12, 13, 25
	Butylene *see also* Petroleum gases, liquefied.	2.1	UN1012		2.1	19	None	304	314, 315.	Forbidden	150 kg	E	40
	1,2-Butylene oxide, stabilized	3	UN3022	II	3	T8	150	202	242	5 L	60 L	B	49
	Butyltoluenes	6.1	UN2667	III	6.1	T2	153	203	241	60 L	220 L	A	

§172.101 HAZARDOUS MATERIALS TABLE—Continued

Symbols	Hazardous materials descriptions and proper shipping names	Hazard class or Division	Identification Numbers	PG	Label Codes	Special provisions	(8) Packaging (§173.***)			(9) Quantity limitations		(10) Vessel stowage	
							Exceptions	Non-bulk	Bulk	Passenger aircraft/rail	Cargo aircraft only	Location	Other
(1)	(2)	(3)	(4)	(5)	(6)	(7)	(8A)	(8B)	(8C)	(9A)	(9B)	(10A)	(10B)
	Butyltrichlorosilane	8	UN1747	II	8, 3	A7, B2, B6, N34, T8, T26	None	202	243	Forbidden	30 L	C	40
	1,4-Butynediol	6.1	UN2716	III	6.1	A1	None	213	240	100 kg	200 kg	A	61, 70
	Butyraldehyde	3	UN1129	II	3	T8	150	202	242	5 L	60 L	B	
	Butyraldoxime	3	UN2840	III	3	B1, T1	150	203	242	60 L	220 L	A	
	Butyric acid	8	UN2820	III	8	T1	154	203	241	5 L	60 L	A	12
	Butyric anhydride	8	UN2739	III	8	T2	154	203	241	5 L	60 L	A	
	Butyronitrile	3	UN2411	II	3, 6.1	T14	None	202	243	1 L	60 L	E	40
	Butyryl chloride	3	UN2353	II	3, 8	B100, T9, T26	None	202	243	1 L	5 L	C	40
	Cacodylic acid	6.1	UN1572	II	6.1		None	212	242	25 kg	100 kg	E	26
	Cadmium compounds	6.1	UN2570	I	6.1		None	211	242	5 kg	50 kg	A	
				II	6.1		None	212	242	25 kg	100 kg	A	
				III	6.1		153	213	240	100 kg	200 kg	A	
	Caesium hydroxide	8	UN2682	II	8		154	212	240	15 kg	50 kg	A	
	Caesium hydroxide solution	8	UN2681	II	8	B2, T8	154	202	242	1 L	30 L	A	
				III	8	T7	154	203	241	5 L	60 L	A	
	Calcium	4.3	UN1401	II	4.3	B101, B106	151	212	241	15 kg	50 kg	E	
	Calcium arsenate	6.1	UN1573	II	6.1		None	212	242	25 kg	100 kg	A	
	Calcium arsenate and calcium arsenite, mixtures, solid.	6.1	UN1574	II	6.1		None	212	242	25 kg	100 kg	A	
D	Calcium arsenite, solid	6.1	NA1574	II	6.1		None	212	242	25 kg	100 kg	A	
	Calcium bisulfite solution, see Bisulfites, inorganic, aqueous solutions, n.o.s.												
	Calcium carbide	4.3	UN1402	I	4.3	A1, A8, B55, B59, B101, B106, N34	None	211	242	Forbidden	15 kg	B	
				II	4.3	A1, A8, B55, B59, B101, B106, N34	151	212	241	15 kg	50 kg	B	
	Calcium chlorate	5.1	UN1452	II	5.1	N34	152	212	242	5 kg	25 kg	A	56, 58, 106
	Calcium chlorate aqueous solution	5.1	UN2429	II	5.1	A2, N41, T8	152	202	242	1 L	5 L	B	56, 58, 106
				III	5.1	A2, N41, T8	152	203	241	2.5L	30 L	B	56, 68, 106
	Calcium chlorite	5.1	UN1453	II	5.1	A9, N34	152	212	242	5 kg	25 kg	A	56, 58, 106
	Calcium cyanamide *with more than 0.1 percent of calcium carbide.*	4.3	UN1403	III	4.3	A1, A19, B105	151	213	241	25 kg	100 kg	A	
	Calcium cyanide	6.1	UN1575	I	6.1	N79, N80	None	211	242	5 kg	50 kg	A	26, 40

	Calcium dithionite *or* Calcium hydrosulfite.	4.2	UN1923	II	4.2	A19, A20	None	212	241	15 kg	50 kg	E	13
	Calcium hydride	4.3	UN1404	I	4.3	A19, B100, N40	None	211	242	Forbidden	15 kg	E	
	Calcium hydrosulfite, *see* Calcium dithionite.												
	Calcium hypochlorite, dry *or* Calcium hypochlorite mixtures dry *with more than 39 percent available chlorine (8.8 percent available oxygen).*	5.1	UN1748	II	5.1	A7, A9, N34	152	212	None	5 kg	25 kg	D	48, 56, 58, 69, 106, 118
	Calcium hypochlorite, hydrated *or* Calcium hypochlorite, hydrated mixtures, *with not less than 5.5 percent but not more than 10 percent water.*	5.1	UN2880	II	5.1		152	212	240	5 kg	25 kg	A	50, 56, 58, 69, 106
	Calcium hypochlorite mixtures, dry, *with more than 10 percent but not more than 39 percent available chlorine.*	5.1	UN2208	III	5.1	A1, A29, B103, N34	152	213	240	25 kg	100 kg	A	56, 58, 69, 106
	Calcium manganese silicon	4.3	UN2844	III	4.3	A1, A19, B105, B106	151	213	241	25 kg	100 kg	A	85, 103
	Calcium nitrate	5.1	UN1454	III	5.1	34	152	213	240	25 kg	100 kg	A	
A	Calcium oxide	8	UN1910	III	8		154	213	240	25 kg	100 kg	A	
	Calcium perchlorate	5.1	UN1455	II	5.1		152	212	242	5 kg	25 kg	A	56, 58, 106
	Calcium permanganate	5.1	UN1456	II	5.1		152	212	242	5 kg	25 kg	D	56, 58, 69, 106, 107
	Calcium peroxide	5.1	UN1457	II	5.1		152	212	242	5 kg	25 kg	A	13, 75, 106
	Calcium phosphide	4.3	UN1360	I	4.3, 6.1.	A8, A19, B100, N40	None	211	242	Forbidden	15 kg	E	40, 85
	Calcium, pyrophoric *or* Calcium alloys, pyrophoric.	4.2	UN1855	I	4.2		None	187	None	Forbidden	Forbidden	D	
	Calcium resinate	4.1	UN1313	III	4.1	A1, A19	None	213	240	25 kg	100 kg	A	
	Calcium resinate, fused	4.1	UN1314	III	4.1	A1, A19	None	213	240	25 kg	100 kg	A	
	Calcium selenate, see Selenates *or* Selenites.												
	Calcium silicide	4.3	UN1405	II	4.3	A19, B105, B106	151	212	241	15 kg	50 kg	B	85, 103
				III	4.3	A1, A19, B106, B108	151	213	241	25 kg	100 kg	B	85, 103
	Camphor oil	3	UN1130	III	3	B1, T1	150	203	242	60 L	220 L	A	
	Camphor, *synthetic*	4.1	UN2717	III	4.1	A1	None	213	240	25 kg	100 kg	A	
	Cannon primers, see Primers, tubular.												
	Caproic acid	8	UN2829	III	8	T1	154	203	241	5 L	60 L	A	
	Caps, blasting, see Detonators, *etc*												

§172.101 HAZARDOUS MATERIALS TABLE—Continued

Symbols	Hazardous materials descriptions and proper shipping names	Hazard class or Division	Identification Numbers	PG	Label Codes	Special provisions	(8) Packaging (§173.***)			(9) Quantity limitations		(10) Vessel stowage	
							Exceptions	Non-bulk	Bulk	Passenger aircraft/rail	Cargo aircraft only	Location	Other
(1)	(2)	(3)	(4)	(5)	(6)	(7)	(8A)	(8B)	(8C)	(9A)	(9B)	(10A)	(10B)
	Carbamate pesticides, liquid, flammable, toxic, *flash point less than 23 degrees C.*	3	UN2758	I	3, 6.1		None	201	243	Forbidden	30 L	B	40
	.....	.....		II	3, 6.1		None	202	243	1 L	60 L	B	40
	Carbamate pesticides, liquid, toxic	6.1	UN2992	I	6.1	T42	None	201	243	1 L	30 L	B	40
	.....	.....		II	6.1	T14	None	202	243	5 L	60 L	B	40
	.....	.....		III	6.1	T14	153	203	241	60 L	220 L	A	40
	Carbamate pesticides, liquid, toxic, flammable, *flash point not less than 23 degrees C.*	6.1	UN2991	I	6.1, 3	T42	None	201	243	1 L	30 L	B	40
	.....	.....		II	6.1, 3	T14	None	202	243	5 L	60 L	B	40
	.....	.....		III	6.1, 3	B1, T14	153	203	242	60 L	220 L	A	40
	Carbamate pesticides, solid, toxic	6.1	UN2757	I	6.1		None	211	242	5 kg	50 kg	A	40
	.....	.....		II	6.1		None	212	242	25 kg	100 kg	A	40
	.....	.....		III	6.1		153	213	240	100 kg	200 kg	A	40
	Carbolic acid, see Phenol, solid *or* Phenol, molten.	.....			.....		.....	.....	.....	.....	.....		
	Carbolic acid solutions, see Phenol solutions.	.....			.....		.....	.....	.....	.....	.....		
I	Carbon, activated	4.2	UN1362	III	4.2		None	213	241	0.5 kg	0.5 kg	A	12
I	Carbon, *animal or vegetable origin*	4.2	UN1361	II	4.2		None	212	242	Forbidden	Forbidden	A	12
	.....	.....		III	4.2		None	213	241	Forbidden	Forbidden	A	12
	Carbon bisulfide, see Carbon disulfide.	.....			.....		.....	.....	.....	.....	.....		
	Carbon dioxide	2.2	UN1013		2.2		306	302, 304.	302, 314, 315.	75 kg	150 kg	A	
	Carbon dioxide and nitrous oxide mixtures.	2.2	UN1015		2.2		306	None	314, 315.	75 kg	150 kg	A	
	Carbon dioxide and oxygen mixtures, compressed.	2.2	UN1014		2.2, 5.1.	77	306	304	314, 315.	75 kg	150 kg	A	.....
	Carbon dioxide, refrigerated liquid	2.2	UN2187		2.2		306	304	314, 315.	50 kg	500 kg	B	
AW	Carbon dioxide, solid *or* Dry ice	9	UN1845	III	None		217	217	240	200 kg	200 kg	C	40
	Carbon disulfide	3	UN1131	I	3, 6.1	B16, T18, T26, T29	None	201	243	Forbidden	Forbidden	D	18, 40, 115
	Carbon monoxide, compressed.	2.3	UN1016		2.3, 2.1.	4	None	302	314, 315.	Forbidden	25 kg	D	40

	Carbon monoxide and hydrogen mixture, compressed..	2.3	UN2600		2.3, 2.1.	6	None	302	302	Forbidden	Forbidden	D	40
D	Carbon monoxide, refrigerated liquid *(cryogenic liquid)*.	2.3	NA9202		2.3, 2.1.	4	None	316	318	Forbidden	Forbidden	D	
	Carbon tetrabromide	6.1	UN2516	III	6.1		153	213	240	100 kg	200 kg	A	25
	Carbon tetrachloride	6.1	UN1846	II	6.1	N36, T8	None	202	243	5 L	60 L	A	40
	Carbonyl chloride, see Phosgene	.....			.....		.....	.....	.....	.....	.....		
	Carbonyl fluoride, compressed	2.3	UN2417		2.3, 8	2	None	302	None ..	Forbidden	Forbidden	D	40
	Carbonyl sulfide	2.3	UN2204		2.3, 2.1.	3, B14	None	304	314, 315.	Forbidden	25 kg	D	40
	Cartridge cases, empty primed, see Cases, cartridge, empty, with primer.	.....			.....		.....	.....	.....	.....	.....		
	Cartridges, actuating, for aircraft ejector seat catapult, fire extinguisher, canopy removal or apparatus, see Cartridges, power device.	.....			.....		.....	.....	.....	.....	.....		
	Cartridges, explosive, see Charges, demolition.	.....			.....		.....	.....	.....	.....	.....		
	Cartridges, flash	1.1G	UN0049	II	1.1G ...		None	62	None ..	Forbidden	Forbidden	B	
	Cartridges, flash	1.3G	UN0050	II	1.3G ...		None	62	None ..	Forbidden	75 kg	B	
	Cartridges for weapons, blank	1.1C	UN0326	II	1.1C ...		None	62	None ..	Forbidden	Forbidden	B	
	Cartridges for weapons, blank	1.2C	UN0413	II	1.2C ...		None	62	None ..	Forbidden	Forbidden	B	
	Cartridges for weapons, blank *or* Cartridges, small arms, blank.	1.4S	UN0014	II	None ..	.....	63	62	None ..	25 kg	100 kg	A	
	Cartridges for weapons, blank *or* Cartridges, small arms, blank.	1.3C	UN0327	II	1.3C ...		None	62	None ..	Forbidden	Forbidden	B	
	Cartridges for weapons, blank *or* Cartridges, small arms, blank.	1.4C	UN0338	II	1.4C ...		None	62	None ..	Forbidden	75 kg	A	24E
	Cartridges for weapons, inert projectile.	1.2C	UN0328	II	1.2C ...		None	62	None ..	Forbidden	Forbidden	B	
	Cartridges for weapons, inert projectile *or* Cartridges, small arms.	1.4S	UN0012	II	None ..	.....	63	62	None ..	25 kg	100 kg	A	
	Cartridges for weapons, inert projectile *or* Cartridges, small arms.	1.4C	UN0339	II	1.4C ...		None	62	None ..	Forbidden	75 kg	B	
	Cartridges for weapons, inert projectile *or* Cartridges, small arms.	1.3C	UN0417	II	1.3C ...		None	62	None ..	Forbidden	Forbidden	B	
	Cartridges for weapons, *with bursting charge*.	1.1F	UN0005	II	1.1F ...		None	62	None ..	Forbidden	Forbidden	E	
	Cartridges for weapons, *with bursting charge*.	1.1E	UN0006	II	1.1E ...		None	62	None ..	Forbidden	Forbidden	B	
	Cartridges for weapons, *with bursting charge*.	1.2F	UN0007	II	1.2F ...		None	62	None ..	Forbidden	Forbidden	E	
	Cartridges for weapons, *with bursting charge*.	1.2E	UN0321	II	1.2E ...		None	62	None ..	Forbidden	Forbidden	B	
	Cartridges for weapons, *with bursting charge*.	1.4F	UN0348	II	1.4F ...		None	62	None ..	Forbidden	Forbidden	E	
	Cartridges for weapons, *with bursting charge*.	1.4E	UN0412	II	1.4E ...		None	62	None ..	Forbidden	75 kg	A	24E

§172.101 HAZARDOUS MATERIALS TABLE—Continued

Symbols	Hazardous materials descriptions and proper shipping names	Hazard class or Division	Identification Numbers	PG	Label Codes	Special provisions	(8) Packaging (§173.***)			(9) Quantity limitations		(10) Vessel stowage	
							Exceptions	Nonbulk	Bulk	Passenger aircraft/rail	Cargo aircraft only	Location	Other
(1)	(2)	(3)	(4)	(5)	(6)	(7)	(8A)	(8B)	(8C)	(9A)	(9B)	(10A)	(10B)
	Cartridges, oil well	1.3C	UN0277	II	1.3C		None	62	None	Forbidden	Forbidden	B	
	Cartridges, oil well	1.4C	UN0278	II	1.4C		None	62	None	Forbidden	75 kg	A	24E
	Cartridges, power device	1.3C	UN0275	II	1.3C		None	62	None	Forbidden	75 kg	B	
	Cartridges, power device	1.4C	UN0276	II	1.4C	110	None	62	None	Forbidden	75 kg	A	24E
	Cartridges, power device	1.4S	UN0323	II	1.4S	110,	63	62	None	25 kg	100 kg	A	
	Cartridges, power device	1.2C	UN0381	II	1.2C		None	62	None	Forbidden	Forbidden	B	
	Cartridges, safety, blank, see Cartridges for weapons, blank *(UN 0014).*												
	Cartridges, safety, see Cartridges for weapons, *other than blank or* Cartridges, power device *(UN 0323).*												
	Cartridges, signal	1.3G	UN0054	II	1.3G		None	62	None	Forbidden	75 kg	B	
	Cartridges, signal	1.4G	UN0312	II	1.4G		None	62	None	Forbidden	75 kg	A	24E
	Cartridges, signal	1.4S	UN0405	II	1.4S		None	62	None	25 kg	100 kg	A	
D	Cartridges, small arms	ORM-D			None		63	None	None	30 kg gross	30 kg gross	A	
	Cartridges, sporting, see Cartridges for weapons, *other than blank.*												
	Cartridges, starter, jet engine, see Cartridges, power device.												
	Cases, cartridge, empty with primer	1.4S	UN0055	II	1.4S	50	None	62	None	25 kg	100 kg	A	
	Cases, cartridges, empty with primer	1.4C	UN0379	II	1.4C	50	None	62	None	Forbidden	75 kg	A	24E
	Cases, combustible, empty, without primer.	1.4C	UN0446	II	1.4C		None	62	None	Forbidden	75 kg	A	24E
	Cases, combustible, empty, without primer.	1.3C	UN0447	II	1.3C		None	62	None	Forbidden	Forbidden	B	
	Casinghead gasoline see Gasoline												
AW	Castor beans *or* Castor meal *or* Castor pomace *or* Castor flake.	9	UN2969	II	None		155	204	240	No limit	No limit	E	34, 40
	Caustic alkali liquids, n.o.s	8	UN1719	II	8	B2, T14	154	202	242	1 L	30 L	A	
				III	8	T7	154	203	241	5 L	60 L	A	
	Caustic potash, see Potassium hydroxide *etc.*												
	Caustic soda, (etc.) see Sodium hydroxide *etc.*												
	Cells, containing sodium	4.3	UN3292	II	4.3		189	189	189	25 kg	No limit	A	
	Celluloid, *in block, rods, rolls, sheets, tubes, etc., except scrap.*	4.1	UN2000	III	4.1		None	213	240	25 kg	100 kg	A	
	Celluloid, scrap	4.2	UN2002	III	4.2		None	213	241	Forbidden	Forbidden	D	

	Cement, see Adhesives *containing flammable liquid.*	.....			.....		.....	.....	.....	.....	.....		
	Cerium, *slabs, ingots, or rods*	4.1	UN1333	II	4.1	N34	None	212	240	15 kg	50 kg	A	74, 91
	Cerium, *turnings or gritty powder*	4.3	UN3078	II	4.3	A1, B106, B109	151	212	242	15 kg	50 kg	E	
	Cesium *or* Caesium	4.3	UN1407	I	4.3	A19, B100, N34, N40	None	211	242	Forbidden	15 kg	D	
	Cesium nitrate *or* Caesium nitrate	5.1	UN1451	III	5.1	A1, A29	152	213	240	25 kg	100 kg	A	
D	Charcoal *briquettes, shell, screenings, wood, etc.*	4.2	NA1361	III	4.2		151	213	240	25 kg	100 kg	A	12
	Charges, bursting, plastics bonded ..	1.1D	UN0457	II	1.1D ...		None	62	None ..	Forbidden	Forbidden	B	
	Charges, bursting, plastics bonded ..	1.2D	UN0458	II	1.2D ...		None	62	None ..	Forbidden	Forbidden	B	
	Charges, bursting, plastics bonded ..	1.4D	UN0459	II	1.4D ...		None	62	None ..	Forbidden	75 kg	A	24E
	Charges, bursting, plastics bonded ..	1.4S	UN0460	II	1.4S ...		None	62	None ..	25 kg	100 kg	A	
	Charges, demolition	1.1D	UN0048	II	1.1D ...		None	62	None ..	Forbidden	Forbidden	B	
	Charges, depth	1.1D	UN0056	II	1.1D ...		None	62	None ..	Forbidden	Forbidden	B	3E, 7E
	Charges, expelling, explosive, for fire extinguishers, see Cartridges, power device.	.....			.....		.....	.....	.....	.....	.....		
	Charges, explosive, commercial *without detonator.*	1.1D	UN0442	II	1.1D ...		None	62	None ..	Forbidden	Forbidden	B	
	Charges, explosive, commercial *without detonator.*	1.2D	UN0443	II	1.2D ...		None	62	None ..	Forbidden	Forbidden	B	
	Charges, explosive, commercial *without detonator.*	1.4D	UN0444	II	1.4D ...		None	62	None ..	Forbidden	75 kg	A	24E
	Charges, explosive, commercial *without detonator.*	1.4S	UN0445	II	1.4S ...		None	62	None ..	25 kg	100 kg	A	
	Charges, propelling	1.1C	UN0271	II	1.1C ...		None	62	None ..	Forbidden	Forbidden	B	
	Charges, propelling	1.3C	UN0272	II	1.3C ...		None	62	None ..	Forbidden	Forbidden	B	
	Charges, propelling	1.2C	UN0415	II	1.2C ...		None	62	None ..	Forbidden	Forbidden	B	
	Charges, propelling	1.4C	UN0491	II	1.4C ...		None	62	None ..	Forbidden	75 kg	A	1E, 5E
	Charges, propelling, for cannon	1.3C	UN0242	II	1.3C ...		None	62	None ..	Forbidden	Forbidden	B	1E, 5E
	Charges, propelling, for cannon	1.1C	UN0279	II	1.1C ...		None	62	None ..	Forbidden	Forbidden	B	1E, 5E
	Charges, propelling, for cannon	1.2C	UN0414	II	1.2C ...		None	62	None ..	Forbidden	Forbidden	B	1E, 5E
	Charges, shaped, commercial, *without detonator.*	1.1D	UN0059	II	1.1D ...		None	62	None ..	Forbidden	Forbidden	B	
	Charges, shaped, commercial *without detonator.*	1.2D	UN0439	II	1.2D ...		None	62	None ..	Forbidden	Forbidden	B	
	Charges, shaped, commercial *without detonator.*	1.4D	UN0440	II	1.4D ...		None	62	None ..	Forbidden	75 kg	A	24E
	Charges, shaped, commercial *without detonator.*	1.4S	UN0441	II	1.4S ...		None	62	None ..	25 kg	100 kg	A	
	Charges, shaped, flexible, linear	1.4D	UN0237	II	1.4D ...		None	62	None ..	Forbidden	75 kg	A	24E
	Charges, shaped, flexible, linear	1.1D	UN0288	II	1.1D ...	101	None	62	None ..	Forbidden	Forbidden	B	
	Charges, supplementary explosive ...	1.1D	UN0060	II	1.1D ...		None	62	None ..	Forbidden	Forbidden	B	1E, 5E
D	Chemical kit	8	NA1760	II	8		154	161	None ..	1 L	30 L	B	40
	Chemical kits *or* First aid kits (*containing hazardous materials.*	9	UN3316	.....	9	15	None	None ..	None ..	10 kg	10 kg	A	.....
	Chloral, anhydrous, inhibited	6.1	UN2075	II	6.1	B101, T14	None	202	243	5 L	60 L	D	40
	Chlorate and borate mixtures	5.1	UN1458	II	5.1	A9, N34	152	212	240	5 kg	25 kg	A	56, 58, 106

§172.101 HAZARDOUS MATERIALS TABLE—Continued

Symbols	Hazardous materials descriptions and proper shipping names	Hazard class or Division	Identification Numbers	PG	Label Codes	Special provisions	(8) Packaging (§173.***)			(9) Quantity limitations		(10) Vessel stowage	
							Exceptions	Non-bulk	Bulk	Passenger aircraft/rail	Cargo aircraft only	Location	Other
(1)	(2)	(3)	(4)	(5)	(6)	(7)	(8A)	(8B)	(8C)	(9A)	(9B)	(10A)	(10B)
	.....	.....		III	5.1	A9, N34	152	213	240	25 kg	100 kg	A	56, 58, 106
	Chlorate and magnesium chloride mixtures.	5.1	UN1459	II	5.1	A9, N34, T8	152	212	240	5 kg	25 kg	A	56, 58, 106
	.....	.....		III	5.1	A9, N34, T8	152	213	240	25 kg	100 kg	A	56, 58, 106
	Chlorate of potash, see Potassium chlorate.	.....			.....		.....	.....	.....	.....	.....		
	Chlorate of soda, see Sodium chlorate.	.....			.....		.....	.....	.....	.....	.....		
	Chlorates, inorganic, aqueous solution, n.o.s.	5.1	UN3210	II	5.1	T8	152	202	242	1 L	5 L	B	56, 58, 106
	Chlorates, inorganic, n.o.s	5.1	UN1461	II	5.1	A9, N34	152	212	242	5 kg	25 kg	A	56, 58, 106
	Chloric acid aqueous solution, *with not more than 10 percent chloric acid.*	5.1	UN2626	II	5.1	T25	None	229	None ..	Forbidden	Forbidden	D	56, 58, 106
	Chloride of phosphorus, see Phosphorus trichloride.	.....			.....		.....	.....	.....	.....	.....		
	Chloride of sulfur, see Sulfur chloride	.....			.....		.....	.....	.....	.....	.....		
	Chlorinated lime, see Calcium hypochlorite mixtures, *etc.*	.....			.....		.....	.....	.....	.....	.....		
	Chlorine	2.3	UN1017		2.3, 8	2, B9, B14	None	304	314, 315.	Forbidden	Forbidden	D	40, 51, 55, 62, 68, 89, 90
	Chlorine azide	Forbidden			.....		.....	.....	.....	.....	.....		
D	Chlorine dioxide, hydrate, frozen	5.1	NA9191	II	5.1, 6.1.		None	229	None ..	Forbidden	Forbidden	E	
	Chlorine dioxide (not hydrate)	Forbidden			.....		.....	.....	.....	.....	.....		
	Chlorine pentafluoride	2.3	UN2548		2.3, 5.1, 8.	1, B7, B9, B14	None	304	314	Forbidden	Forbidden	D	40, 89, 90
	Chlorite solution	8	UN1908	II	8	A3,A6, A7, B2, N34, T8	154	202	242	1 L	30 L	B	26
	.....	.....		III	8	A3,A6, A7, B2, N34, T8	154	203	241	5 L	60 L	B	26

Chlorine trifluoride	2.3	UN1749		2.3, 5.1, 8.	2, B7, B9, B14	None	304	314	Forbidden	Forbidden	D	40, 89, 90
Chlorites, inorganic, n.o.s	5.1	UN1462	II	5.1	A7, N34	152	212	242	5 kg	25 kg	A	56, 58, 106
1-Chloro-3-bromopropane	6.1	UN2688	III	6.1	T2	153	203	241	60 L	220 L	A	
1-Chloro-1,1-difluoroethane, see Chlorodifluoroethanes.												
1-Chloro-1,1-difluoroethane *or* Refrigerant gas R 142b.	2.1	UN2517		2.1		306	304	314, 315.	Forbidden	150 kg	B	40
3-Chloro-4-methylphenyl isocyanate	6.1	UN2236	II	6.1		None	202	243	5 L	60 L	B	40
1-Chloro-1,2,2,2-tetrafluoroethane*or* Refrigerant gas R 124.	2.2	UN1021		2.2		306	304	314, 315.	75 kg	150 kg	A	
4-Chloro-o-toluidine hydrochloride	6.1	UN1579	III	6.1		153	213	240	100 kg	200 kg	A	
1-Chloro-2,2,2-trifluoroethane *or* Refrigerant gas R 133a.	2.2	UN1983		2.2		306	304	314, 315.	75 kg	150 kg	A	
Chloroacetic acid, molten	6.1	UN3250	II	6.1, 8	T9	None	202	243	Forbidden	Forbidden	C	40
Chloroacetic acid, solid	6.1	UN1751	II	6.1, 8	A3, A7, N34	None	212	242	15 kg	50 kg	A	40
Chloroacetic acid, solution	6.1	UN1750	II	6.1, 8	A7, N34, T8, T27	None	202	243	1 L	30 L	C	40
Chloroacetone, stabilized	6.1	UN1695	I	6.1,3,8	2, B9, B14, B32, B74, N12, N32, N34, T38, T43, T45	None	227	244	Forbidden	Forbidden	D	20, 40, 95
Chloroacetone (unstabilized)	Forbidden											
+ Chloroacetonitrile	6.1	UN2668	II	6.1, 3	2, B9, B14, B32, B74, T38, T43, T45	None	227	244	Forbidden	60 L	A	12, 26, 40
Chloroacetophenone *(CN), liquid*	6.1	UN1697	II	6.1	A3, N12, N32, N33	None	202	243	Forbidden	60 L	D	12, 40
Chloroacetophenone *(CN), solid*	6.1	UN1697	II	6.1	A3, N12, N32, N33, N34	None	212	None	Forbidden	100 kg	D	12, 40
Chloroacetyl chloride	6.1	UN1752	I	6.1, 8	2, A3, A6, A7, B3, B8, B9, B14, B32, B74, B77, N34, N43, T38, T43, T45	None	227	244	Forbidden	Forbidden	D	40
Chloroanilines, liquid	6.1	UN2019	II	6.1	T14	None	202	243	5 L	60 L	A	
Chloroanilines, solid	6.1	UN2018	II	6.1	T14, T38	None	212	242	25 kg	100 kg	A	
Chloroanisidines	6.1	UN2233	III	6.1		153	213	240	100 kg	200 kg	A	
Chlorobenzene	3	UN1134	III	3	B1, T1	150	203	242	60 L	220 L	A	
Chlorobenzol, see Chlorobenzene												
Chlorobenzotrifluorides	3	UN2234	III	3	B1, T1	150	203	242	60 L	220 L	A	40
Chlorobenzyl chlorides	6.1	UN2235	III	6.1	T8	153	203	241	60 L	220 L	A	
Chlorobutanes	3	UN1127	II	3	B101, T8	150	202	242	5 L	60 L	B	
Chlorocresols, *liquid*	6.1	UN2669	II	6.1	T8	None	202	243	5 L	60 L	A	12
Chlorocresols, *solid*	6.1	UN2669	II	6.1		None	212	242	25 kg	100 kg	A	12
Chlorodifluorobromomethane *or* Refrigerant gas R 12B1.	2.2	UN1974		2.2		306	304	314, 315.	75 kg	150 kg	A	

§172.101 HAZARDOUS MATERIALS TABLE—Continued

Symbols	Hazardous materials descriptions and proper shipping names	Hazard class or Division	Identification Numbers	PG	Label Codes	Special provisions	(8) Packaging (§173.***)			(9) Quantity limitations		(10) Vessel stowage	
							Exceptions	Non-bulk	Bulk	Passenger aircraft/rail	Cargo aircraft only	Location	Other
(1)	(2)	(3)	(4)	(5)	(6)	(7)	(8A)	(8B)	(8C)	(9A)	(9B)	(10A)	(10B)
	Chlorodifluoromethane and chloropentafluoroethane mixture *or* Refrigerant gas R 502 *with fixed boiling point, with approximately 49 percent chlorodifluoromethane.*	2.2	UN1973		2.2		306	304	314, 315.	75 kg	150 kg	A	
	Chlorodifluoromethane *or* Refrigerant gas R 22.	2.2	UN1018		2.2		306	304	314, 315.	75 kg	150 kg	A	
	Chlorodinitrobenzenes	6.1	UN1577	II	6.1	T14	None	212	242	25 kg	100 kg	A	91
	2-Chloroethanal	6.1	UN2232	I	6.1	2, B9, B14, B32, B74, T38, T43, T45	None	227	244	Forbidden	Forbidden	D	40
	Chloroform	6.1	UN1888	III	6.1	N36, T14	153	203	241	5 L	60 L	A	40
	Chloroformates, toxic, corrosive, flammable, n.o.s.	6.1	UN2742	II	6.1, 8, 3.	5	None	202	243	1 L	30 L	A	12, 13, 21, 25, 40, 100
	Chloroformates, toxic, corrosive, n.o.s.	6.1	UN3277	II	6.1, 8	T12, T26	None	202	243	1 L	30 L	A	12, 13, 25, 40
	Chloromethyl chloroformate	6.1	UN2745	II	6.1, 8	T18	None	202	243	1 L	30 L	A	12, 13, 21, 25, 40, 100
	Chloromethyl ethyl ether	3	UN2354	II	3, 6.1	T8	None	202	243	1 L	60 L	E	40
	Chloronitroanilines	6.1	UN2237	III	6.1		153	213	240	100 kg	200 kg	A	
+	Chloronitrobenzene, *ortho, liquid*	6.1	UN1578	II	6.1	T14	None	202	243	5 L	60 L	A	
+	Chloronitrobenzenes *meta or para, solid.*	6.1	UN1578	II	6.1	T14	None	212	242	25 kg	100 kg	A	
	Chloronitrotoluenes *liquid*	6.1	UN2433	III	6.1		153	203	241	60 L	220 L	A	
	Chloronitrotoluenes, *solid*	6.1	UN2433	III	6.1		153	213	240	100 kg	200 kg	A	
	Chloropentafluoroethane *or* Refrigerant gas R 115.	2.2	UN1020		2.2		306	304	314, 315.	75 kg	150 kg	A	
	Chlorophenolates, liquid *or* Phenolates, liquid.	8	UN2904	III	8		154	203	241	5 L	60 L	A	
	Chlorophenolates, solid *or* Phenolates, solid.	8	UN2905	III	8		154	213	240	25 kg	100 kg	A	
	Chlorophenols, liquid	6.1	UN2021	III	6.1	T7	153	203	241	60 L	220 L	A	
	Chlorophenols, solid	6.1	UN2020	III	6.1	T7	153	213	240	100 kg	200 kg	A	
	Chlorophenyltrichlorosilane	8	UN1753	II	8	A7, B2, B6, N34, T8, T26	None	202	242	Forbidden	30 L	C	40

+	Chloropicrin	6.1	UN1580	I	6.1	2, B7, B9, B14, B32, B46, B74, T38, T43, T45	None	227	244	Forbidden	Forbidden	D	40
	Chloropicrin and methyl bromide mixtures.	2.3	UN1581		2.3	2, B9, B14	None	193	314, 315.	Forbidden	Forbidden	D	25, 40
	Chloropicrin and methyl chloride mixtures.	2.3	UN1582		2.3	2	None	193	245	Forbidden	Forbidden	D	25, 40
	Chloropicrin mixture, flammable (pressure not exceeding 14.7 psia at 115 degrees F flash point below 100 degrees F) see Toxic liquids, flammable, *etc.*												
	Chloropicrin mixtures, n.o.s	6.1	UN1583	I	6.1	5	None	201	243	Forbidden	Forbidden	C	40
				II	6.1		None	202	243	Forbidden	Forbidden	C	40
				III	6.1		153	203	241	Forbidden	Forbidden	C	40
D	Chloropivaloyl chloride	6.1	NA9263	I	6.1, 8	2, B9, B14, B32, B74, T38, T43, T45	None	227	244	Forbidden	Forbidden	B	40
	Chloroplatinic acid, solid	8	UN2507	III	8		154	213	240	25 kg	100 kg	A	
	Chloroprene, inhibited	3	UN1991	I	3, 6.1	B57, T15	None	201	243	Forbidden	30 L	D	40
	Chloroprene, uninhibited	Forbidden											
	2-Chloropropane	3	UN2356	I	3	N36, T14	150	201	243	1 L	30 L	E	
	3-Chloropropanol-1	6.1	UN2849	III	6.1	T8	153	203	241	60 L	220 L	A	
	2-Chloropropene	3	UN2456	I	3	A3, N36, T20	150	201	243	1 L	30 L	E	
	2-Chloropropionic acid	8	UN2511	III	8	T8	154	203	241	5 L	60 L	A	8
	2-Chloropyridine	6.1	UN2822	II	6.1	T14	None	202	243	5 L	60 L	A	40
	Chlorosilanes, corrosive, flammable, n.o.s.	8	UN2986	II	8, 3	B100, T18, T26	None	202	243	1 L	30 L	C	40
	Chlorosilanes, corrosive, n.o.s	8	UN2987	II	8	B2, T8, T26	154	202	242	1 L	30 L	C	40
	Chlorosilanes, flammable, corrosive, n.o.s.	3	UN2985	II	3, 8	B100, T18, T26	None	201	243	1 L	5 L	B	40
	Chlorosilanes, water-reactive, flammable, corrosive, n.o.s.	4.3	UN2988	I	4.3, 3, 8.	A2, T24, T26	None	201	244	Forbidden	1 L	D	21, 28, 40, 49, 100
+	Chlorosulfonic acid *(with or without sulfur trioxide).*	8	UN1754	I	8, 6.1	2, A3, A6, A10, B9, B10, B14, B32, B74, T38, T43, T45	None	227	244	Forbidden	Forbidden	C	40
	Chlorotoluenes	3	UN2238	III	3	B1, T1	150	203	242	60 L	220 L	A	
	Chlorotoluidines *liquid*	6.1	UN2239	III	6.1	T7	153	203	241	60 L	220 L	A	
	Chlorotoluidines *solid*	6.1	UN2239	III	6.1		153	213	240	100 kg	200 kg	A	
	Chlorotrifluoromethane and trifluoromethane azeotropic mixture *or* Refrigerant gas R 503 *with approximately 60 percent chlorotrifluoromethane.*	2.2	UN2599		2.2		306	304	314, 315.	75 kg	150 kg	A	
	Chlorotrifluoromethane *OR* Refrigerant gas R 13.	2.2	UN1022		2.2		306	304	314, 315.	75 kg	150 kg	A	
D	Chromic acid, solid	5.1	NA1463	II	5.1, 8		None	212	242	5 kg	25 kg	A	
	Chromic acid solution	8	UN1755	II	8	B2, T9, T27	154	202	242	1 L	30 L	C	40

§172.101 HAZARDOUS MATERIALS TABLE—Continued

Symbols	Hazardous materials descriptions and proper shipping names	Hazard class or Division	Identification Numbers	PG	Label Codes	Special provisions	(8) Packaging (§173.***) Exceptions	Non-bulk	Bulk	(9) Quantity limitations Passenger aircraft/rail	Cargo aircraft only	(10) Vessel stowage Location	Other
(1)	(2)	(3)	(4)	(5)	(6)	(7)	(8A)	(8B)	(8C)	(9A)	(9B)	(10A)	(10B)
	.....	.....		III	8	T8, T26	154	203	241	5 L	60 L	C	40
	Chromic anhydride, see Chromium trioxide, anhydrous.	.....			.....		.....	.....	.....	.....	.....		
	Chromic fluoride, solid	8	UN1756	II	8		154	212	240	15 kg	50 kg	A	26
	Chromic fluoride, solution	8	UN1757	II	8	B2, T8	154	202	242	1 L	30 L	A	
	.....	.....		III	8	T7	154	203	241	5 L	60 L	A	
	Chromium nitrate	5.1	UN2720	III	5.1	A1, A29	152	213	240	25 kg	100 kg	A	
	Chromium oxychloride	8	UN1758	I	8	A3, A6, A7, B10, N34, T12, T26	None	201	243	0.5 L	2.5 L	C	40, 66, 74, 89, 90
	Chromium trioxide, anhydrous	5.1	UN1463	II	5.1, 8	B106	None	212	242	5 kg	25 kg	A	
	Chromosulfuric acid	8	UN2240	I	8	A3, A6, A7, B4, B6, N34, T12, T27	None	201	243	0.5 L	2.5 L	B	40, 66, 74, 89, 90
	Chromyl chloride, see Chromium oxychloride.	.....			.....		.....	.....	.....	.....	.....		
	Cigar and cigarette lighters, charged with fuel, see Lighters for cigars, cigarettes, *etc.*	.....			.....		.....	.....	.....	.....	.....		
	Coal briquettes, hot	Forbidden			.....		.....	.....	.....	.....	.....		
	Coal gas, compressed	2.3	UN1023		2.3, 2.1.	3	None	302	314, 315.	Forbidden	25 kg	D	40
	Coal tar distillates, flammable	3	UN1136	II	3	T8, T31	150	202	242	5 L	60 L	B	
	.....	.....		III	3	B1, T7, T30	150	203	242	60 L	220 L	A	
	Coal tar dye, corrosive, liquid, n.o.s, see Dyes, liquid *or* solid, n.o.s. *or* Dye intermediates, liquid *or* solid, n.o.s., *corrosive.*	.....			.....		.....	.....	.....	.....	.....		
	Coating solution (*includes surface treatments or coatings used for industrial or other purposes such as vehicle undercoating, drum or barrel lining*).	3	UN1139	I	3	T42	150	201	243	1 L	30 L	E	.....
	.....	.....		II	3	T7,T30	150	202	242	5 L	60 L	B	.....
	.....	.....		III	3	B1,T7,T30	150	203	242	60 L	220 L	A	.....
	Cobalt naphthenates, powder	4.1	UN2001	III	4.1	A19	151	213	240	25 kg	100 kg	A	
	Cobalt resinate, precipitated	4.1	UN1318	III	4.1	A1, A19	151	213	240	25 kg	100 kg	A	
	Coke, hot	Forbidden			.....		.....	.....	.....	.....	.....		
	Collodion, see Nitrocellulose *etc*	.....			.....		.....	.....	.....	.....	.....		

D	Combustible liquid, n.o.s	Combustible liquid	NA1993	III	None ..	T1	150	203	241	60 L	220 L	A	
	Components, explosive train, n.o.s ...	1.2B	UN0382	II	1.2B ...	101	None	62	None ..	Forbidden	Forbidden	B	1E, 6E
	Components, explosive train, n.o.s ...	1.4B	UN0383	II	1.4B ...	101	None	62	None ..	Forbidden	75 kg	A	24E
	Components, explosive train, n.o.s ...	1.4S	UN0384	II	1.4S ...	101	None	62	None ..	25 kg	100 kg	A	
	Components, explosive train, n.o.s ...	1.1B	UN0461	II	1.1B ...	101	None	62	None ..	Forbidden	Forbidden	B	1E, 6E
	Composition B, see Hexolite, *etc*	.....			.....		.....	.....	.....	.....	.....		
D	Compounds, cleaning liquid	8	NA1760	I	8	A7, B10, T42	None	201	243	0.5 L	2.5 L	B	40
	.....	.....		II	8	B2, N37, T14	154	202	242	1 L	30 L	B	40
	.....	.....		III	8	N37, T7	154	203	241	5 L	60 L	A	40
D	Compounds, cleaning liquid	3	NA1993	I	3	T42	150	201	243	1 L	30 L	E	
	.....	.....		II	3	T8, T31	150	202	242	5 L	60 L	B	
	.....	.....		III	3	B1, B52, T7, T30	150	203	242	60 L	220 L	A	
D	Compounds, tree killing, liquid *or* Compounds, weed killing, liquid.	8	NA1760	I	8	A7, B10, T42	None	201	243	0.5 L	2.5 L	B	40
	.....	.....		II	8	B2, N37, T14	154	202	242	1 L	30 L	B	40
	.....	.....		III	8	N37, T7	154	203	241	5 L	60 L	A	40
D	Compounds, tree killing, liquid *or* Compounds, weed killing, liquid.	3	NA1993	I	3	T42	150	201	243	1 L	30 L	E	
	.....	.....		II	3	T8, T31	150	202	242	5 L	60 L	B	
	.....	.....		III	3	B1, B52, T7, T30	150	203	242	60 L	220 L	A	
D	Compounds, tree killing, liquid *or* Compounds, weed killing, liquid.	6.1	NA2810	I	6.1		None	201	243	1 L	30 L	B	40
	.....	.....		II	6.1		None	202	243	5 L	60 L	B	40
	.....	.....		III	6.1		153	203	241	60 L	220 L	A	40
	Compressed gas, oxidizing, n.o.s	2.2	UN3156		2.2, 5.1.		306	302	314, 315.	75 kg	150 kg	D	
I	Compressed gas, toxic, corrosive, n.o.s. *Inhalation Hazard Zone A.*	2.3	UN3304	.....	2.3, 8	1	None	192	245	Forbidden	Forbidden	D	40
I	Compressed gas, toxic, corrosive, n.o.s. *Inhalation Hazard Zone B.*	2.3	UN3304	.....	2.3, 8	2	None	302, 305.	314, 315.	Forbidden	Forbidden	D	40
I	Compressed gas, toxic, corrosive, n.o.s. *Inhalation Hazard Zone C.*	2.3	UN3304	.....	2.3, 8	3	None	302, 305.	314, 315.	Forbidden	Forbidden	D	40
I	Compressed gas, toxic, corrosive, n.o.s. *Inhalation Hazard Zone D.*	2.3	UN3304	.....	2.3, 8	4	None	302, 305.	314, 315.	Forbidden	Forbidden	D	40
I	Compressed gas, toxic, flammable, corrosive, n.o.s. *Inhalation Hazard Zone A.*	2.3	UN3305	.....	2.3, 2.1, 8.	1	None	192	245	Forbidden	Forbidden	D	17, 40
I	Compressed gas, toxic, flammable, corrosive, n.o.s. *Inhalation Hazard Zone B.*	2.3	UN3305	.....	2.3, 2.1, 8.	2	None	302, 305.	314, 315.	Forbidden	Forbidden	D	17, 40
I	Compressed gas, toxic, flammable, corrosive, n.o.s. *Inhalation Hazard Zone C.*	2.3	UN3305	.....	2.3, 2.1, 8.	3	None	302, 305.	314, 315.	Forbidden	Forbidden	D	17, 40
I	Compressed gas, toxic, flammable, corrosive, n.o.s. *Inhalation Hazard Zone D.*	2.3	UN3305	.....	2.3, 2.1, 8.	4	None	302, 305.	314, 315.	Forbidden	Forbidden	D	17, 40
I	Compressed gas, toxic, oxdizing, corrosive, n.o.s. *Inhalation Hazard Zone A.*	2.3	UN3306	.....	2.3, 5.1, 8.	1	None	192	244	Forbidden	Forbidden	D	40, 89, 90

§172.101 HAZARDOUS MATERIALS TABLE—Continued

Symbols	Hazardous materials descriptions and proper shipping names	Hazard class or Division	Identification Numbers	PG	Label Codes	Special provisions	(8) Packaging (§173.***)			(9) Quantity limitations		(10) Vessel stowage	
							Exceptions	Nonbulk	Bulk	Passenger aircraft/rail	Cargo aircraft only	Location	Other
(1)	(2)	(3)	(4)	(5)	(6)	(7)	(8A)	(8B)	(8C)	(9A)	(9B)	(10A)	(10B)
I	Compressed gas, toxic, oxidizing, corrosive, n.o.s. *Inhalation Hazard Zone B.*	2.3	UN3306	.....	2.3, 5.1, 8.	2	None	302, 305.	314, 315.	Forbidden	Forbidden	D	40, 89, 90
I	Compressed gas, toxic, oxidizing, corrosive, n.o.s. *Inhalation Hazard Zone C.*	2.3	UN3306	.....	2.3, 5.1, 8.	3	None	302, 305.	314, 315.	Forbidden	Forbidden	D	40, 89, 90
I	Compressed gas, toxic, oxidizing, corrosive, n.o.s. *Inhalation Hazard Zone D.*	2.3	UN3306	.....	2.3, 5.1, 8.	4	None	302, 305.	314, 315.	Forbidden	Forbidden	D	40, 89, 90
	Compressed gas, toxic, oxidizing, n.o.s. *Inhalation Hazard Zone A.*	2.3	UN3303	.....	2.3, 5.1.	1	None	192	245	Forbidden	Forbidden	D	40
	Compressed gas, toxic, oxidizing, n.o.s. *Inhalation Hazard Zone B.*	2.3	UN3303	.....	2.3, 5.1.	2	None	302, 305.	314, 315.	Forbidden	Forbidden	D	40
	Compressed gas, toxic, oxidizing, n.o.s. *Inhalation Hazard Zone C.*	2.3	UN3303	.....	2.3, 5.1.	3	None	302, 305.	314, 315.	Forbidden	Forbidden	D	40
	Compressed gas, toxic, oxidizing, n.o.s. *Inhalation Hazard Zone D.*	2.3	UN3303	.....	2.3, 5.1.	4	None	302, 305.	314, 315.	Forbidden	Forbidden	D	40
	Compressed gases, flammable, n.o.s	2.1	UN1954		2.1		306	302, 305.	314, 315.	Forbidden	150 kg	D	40
	Compressed gases, n.o.s	2.2	UN1956		2.2		306, 307	302, 305.	314, 315.	75 kg	150 kg	A	
	Compressed gases, toxic, flammable, n.o.s. *Inhalation hazard Zone A.*	2.3	UN1953		2.3, 2.1.	1	None	192	245	Forbidden	Forbidden	D	40, 95
	Compressed gases, toxic, flammable, n.o.s. *Inhalation hazard Zone B.*	2.3	UN1953		2.3, 2.1.	2, B9, B14	None	302, 305.	314, 315.	Forbidden	Forbidden	D	40
	Compressed gases, toxic, flammable, n.o.s. *Inhalation Hazard Zone C.*	2.3	UN1953		2.3, 2.1.	3, B14	None	302, 305.	314, 315.	Forbidden	Forbidden	D	40
	Compressed gases, toxic, flammable, n.o.s. *Inhalation Hazard Zone D.*	2.3	UN1953		2.3, 2.1.	4	None	302, 305.	314, 315.	Forbidden	Forbidden	D	40
	Compressed gases, toxic, n.o.s. *Inhalation Hazard Zone A.*	2.3	UN1955		2.3	1	None	192	245	Forbidden	Forbidden	D	40
	Compressed gases, toxic, n.o.s. *Inhalation Hazard Zone B.*	2.3	UN1955		2.3	2, B9, B14	None	302, 305.	314, 315.	Forbidden	Forbidden	D	40
	Compressed gases, toxic, n.o.s. *Inhalation Hazard Zone C.*	2.3	UN1955		2.3	3, B14	None	302, 305.	314, 315.	Forbidden	Forbidden	D	40

	Compressed gases, toxic, n.o.s. *Inhalation Hazard Zone D.*	2.3	UN1955		2.3	4	None	302, 305.	314, 315.	Forbidden	Forbidden	D	40
D	Consumer commodity	ORM-D			None		156, 306	156, 306.	None	30 kg gross	30 kg gross	A	
	Contrivances, water-activated, *with burster, expelling charge or propelling charge.*	1.2L	UN0248	II	1.2L	101	None	62	None	Forbidden	Forbidden	E	2E, 8E, 11E, 17E
	Contrivances, water-activated, *with burster, expelling charge or propelling charge.*	1.3L	UN0249	II	1.3L	101	None	62	None	Forbidden	Forbidden	E	2E, 8E, 11E, 17E
	Copper acetoarsenite	6.1	UN1585	II	6.1		None	212	242	25 kg	100 kg	A	
	Copper acetylide	Forbidden											
	Copper amine azide	Forbidden											
	Copper arsenite	6.1	UN1586	II	6.1		None	212	242	25 kg	100 kg	A	
	Copper based pesticides, liquid, flammable, toxic, *flash point less than 23 degrees C.*	3	UN2776	I	3, 6.1		None	201	243	Forbidden	30 L	B	40
				II	3, 6.1		None	202	243	1 L	60 L	B	40
	Copper based pesticides, liquid, toxic.	6.1	UN3010	I	6.1	T42	None	201	243	1 L	30 L	B	40
				II	6.1	T14	None	202	243	5 L	60 L	B	40
				III	6.1	T14	153	203	241	60 L	220 L	A	40
	Copper based pesticides, liquid, toxic, flammable *flashpoint not less than 23 degrees C.*	6.1	UN3009	I	6.1, 3	T42	None	201	243	1 L	30 L	B	40
				II	6.1, 3	T14	None	202	243	5 L	60 L	B	40
				III	6.1, 3	B1, T14	153	203	242	60 L	220 L	A	40
	Copper based pesticides, solid, toxic	6.1	UN2775	I	6.1		None	211	242	5 kg	50 kg	A	40
				II	6.1		None	212	242	25 kg	100 kg	A	40
				III	6.1		153	213	240	100 kg	200 kg	A	40
	Copper chlorate	5.1	UN2721	II	5.1	A1	152	212	242	5 kg	25 kg	A	56, 58, 106
	Copper chloride	8	UN2802	III	8		154	213	240	25 kg	100 kg	A	
	Copper cyanide	6.1	UN1587	II	6.1		None	204	242	25 kg	100 kg	A	26
	Copper selenate, see Selenates *or* Selenites.												
	Copper selenite, see Selenates *or* Selenites.												
	Copper tetramine nitrate	Forbidden											
AW	Copra	4.2	UN1363	III	4.2		None	213	241	Forbidden	Forbidden	A	13, 19, 48, 119
	Cord, detonating, *flexible*	1.1D	UN0065	II	1.1D	102	63(a)	62	None	Forbidden	Forbidden	B	
	Cord, detonating, *flexible*	1.4D	UN0289	II	1.4D		None	62	None	Forbidden	75 kg	A	24E
	Cord detonating *or* Fuse detonating *metal clad.*	1.2D	UN0102	II	1.2D		None	62	None	Forbidden	Forbidden	B	
	Cord, detonating *or* Fuse, detonating *metal clad.*	1.1D	UN0290	II	1.1D		None	62	None	Forbidden	Forbidden	B	

§172.101 HAZARDOUS MATERIALS TABLE—Continued

Symbols	Hazardous materials descriptions and proper shipping names	Hazard class or Division	Identification Numbers	PG	Label Codes	Special provisions	(8) Packaging (§173.***)			(9) Quantity limitations		(10) Vessel stowage	
							Exceptions	Non-bulk	Bulk	Passenger aircraft/rail	Cargo aircraft only	Location	Other
(1)	(2)	(3)	(4)	(5)	(6)	(7)	(8A)	(8B)	(8C)	(9A)	(9B)	(10A)	(10B)
	Cord, detonating, mild effect *or* Fuse, detonating, mild effect *metal clad.*	1.4D	UN0104	II	1.4D		None	62	None	Forbidden	75 kg	A	24E
	Cord, igniter	1.4G	UN0066	II	1.4G		None	62	None	Forbidden	75 kg	A	24E
	Cordeau detonant fuse, see Cord, detonating, *etc;* Cord, detonating, *flexible.*												
	Cordite, see Powder, smokeless												
	Corrosive liquid, acidic, inorganic, n.o.s.	8	UN3264	I	8	B10	None	201	243	0.5 L	2.5 L	B	40
				II	8	B2, T14	154	202	242	1 L	30 L	B	40
				III	8	T7	154	203	241	5 L	60 L	A	40
	Corrosive liquid, acidic, organic, n.o.s.	8	UN3265	I	8	B10	None	201	243	0.5 L	2.5 L	B	40
				II	8	B2, T14	154	202	242	1 L	30 L	B	40
				III	8	T7	154	203	241	5 L	60 L	A	40
	Corrosive liquid, basic, inorganic, n.o.s.	8	UN3266	I	8	B10	None	201	243	0.5 L	2.5 L	B	40
				II	8	B2, T14	154	202	242	1 L	30 L	B	40
				III	8	T7	154	203	241	5 L	60 L	A	40
	Corrosive liquid, basic, organic, n.o.s	8	UN3267	I	8	B10	None	201	243	0.5 L	2.5 L	B	40
				II	8	B2, T14	154	202	242	1 L	30 L	B	40
				III	8	T7	154	203	241	5 L	60 L	A	40
	Corrosive liquid, self-heating, n.o.s	8	UN3301	I	8, 4.2	B10	None	201	243	0.5 L	2.5 L	D	
				II	8, 4.2	B2	154	202	242	1 L	30 L	D	
	Corrosive liquids, flammable, n.o.s	8	UN2920	I	8, 3	B10, T42	None	201	243	0.5 L	2.5 L	C	25, 40
				II	8, 3	B2, T15, T26	None	202	243	1 L	30 L	C	25, 40
	Corrosive liquids, n.o.s	8	UN1760	I	8	A7, B10, T42	None	201	243	0.5 L	2.5 L	B	40
				II	8	B2, T14	154	202	242	1 L	30 L	B	40
				III	8	T7	154	203	241	5 L	60 L	A	40
	Corrosive liquids, oxidizing, n.o.s	8	UN3093	I	8, 5.1		None	201	243	Forbidden	2.5 L	C	89
				II	8, 5.1		None	202	243	1 L	30 L	C	89
	Corrosive liquids, toxic, n.o.s	8	UN2922	I	8, 6.1	A7, B10, T18, T27	None	201	243	0.5 L	2.5 L	B	40
				II	8, 6.1	B3, T18, T26	None	202	243	1 L	30 L	B	40
				III	8, 6.1	T8	154	203	241	5 L	60 L	B	40
	Corrosive liquids, water-reactive, n.o.s.	8	UN3094	I	8, 4.3		None	201	243	Forbidden	1 L	E	
				II	8, 4.3		None	202	243	1 L	5 L	E	
	Corrosive solid, acidic, inorganic, n.o.s.	8	UN3260	I	8		None	211	242	1 kg	25 kg	B	

	.....	.....		II	8		154	212	240	15 kg	50 kg	B	
	.....	.....		III	8		154	213	240	25 kg	100 kg	A	
	Corrosive solid, acidic, organic, n.o.s	8	UN3261	I	8		None	211	242	1 kg	25 kg	B	
	.....	.....		II	8		154	212	240	15 kg	50 kg	B	
	.....	.....		III	8		154	213	240	25 kg	100 kg	A	
	Corrosive solid, basic, inorganic, n.o.s.	8	UN3262	I	8		None	211	242	1 kg	25 kg	B	
	.....	.....		II	8		154	212	240	15 kg	50 kg	B	
	.....	.....		III	8		154	213	240	25 kg	100 kg	A	
	Corrosive solid, basic, organic, n.o.s	8	UN3263	I	8		None	211	242	1 kg	25 kg	B	
	.....	.....		II	8		154	212	240	15 kg	50 kg	B	
	.....	.....		III	8		154	213	240	25 kg	100 kg	A	
	Corrosive solids, flammable, n.o.s	8	UN2921	I	8, 4.1	B106	None	211	242	1 kg	25 kg	B	12, 25
	.....	.....		II	8, 4.1		None	212	242	15 kg	50 kg	B	12, 25
	Corrosive solids, n.o.s	8	UN1759	I	8		None	211	242	1 kg	25 kg	B	
	.....	.....		II	8	128	154	212	240	15 kg	50 kg	A	
	.....	.....		III	8	128	154	213	240	25 kg	100 kg	A	
	Corrosive solids, oxidizing, n.o.s	8	UN3084	I	8, 5.1	B100	None	211	242	1 kg	25 kg	C	
	.....	.....		II	8, 5.1	B100	None	212	242	15 kg	50 kg	C	
	Corrosive solids, self-heating, n.o.s ..	8	UN3095	I	8, 4.2	B100	None	211	243	1 kg	25 kg	C	
	.....	.....		II	8, 4.2		None	212	242	15 kg	50 kg	C	
	Corrosive solids, toxic, n.o.s	8	UN2923	I	8, 6.1		None	211	242	1 kg	25 kg	B	40
	.....	.....		II	8, 6.1		None	212	240	15 kg	50 kg	B	40
	.....	.....		III	8, 6.1		154	213	240	25 kg	100 kg	B	40, 95
	Corrosive solids, water-reactive, n.o.s.	8	UN3096	I	8, 4.3	B105	None	211	243	1 kg	25 kg	D	
	.....	.....		II	8, 4.3	128, B105	None	212	242	15 kg	50 kg	D	
DW	Cotton	9	NA1365		9	W41	None	None ..	None ..	No limit	No limit	A	
AIW	Cotton waste, oily	4.2	UN1364	III	4.2	N9	None	213	None ..	Forbidden	Forbidden	A	54
AIW	Cotton, wet	4.2	UN1365	III	4.2		None	204	241	Forbidden	Forbidden	A	
	Coumarin derivative pesticides, liquid, flammable, toxic, *flashpoint less than 23 degrees C.*	3	UN3024	I	3, 6.1		None	201	243	Forbidden	30 L	B	40
	.....	.....		II	3, 6.1		None	202	243	1 L	60 L	B	40
	Coumarin derivative pesticides, liquid, toxic.	6.1	UN3026	I	6.1		None	201	243	1 L	30 L	B	40
	.....	.....		II	6.1		None	202	243	5 L	60 L	B	40
	.....	.....		III	6.1		153	203	241	60 L	220 L	A	40
	Coumarin derivative pesticides, liquid, toxic, flammable *flashpoint not less than 23 degrees C.*	6.1	UN3025	I	6.1, 3		None	201	243	1 L	30 L	B	40
	.....	.....		II	6.1, 3		None	202	243	5 L	60 L	B	40
	.....	.....		III	6.1, 3	B1	153	203	242	60 L	220 L	A	40
	Coumarin derivative pesticides, solid, toxic.	6.1	UN3027	I	6.1		None	211	242	5 kg	50 kg	A	40
	.....	.....		II	6.1		None	212	242	25 kg	100 kg	A	40
	.....	.....		III	6.1		153	213	240	100 kg	200 kg	A	40
	Cresols	6.1	UN2076	II	6.1, 8	B110, T8	None	202	243	1 L	30 L	B	
	Cresylic acid	6.1	UN2022	II	6.1, 8	B110, T8	None	202	243	1 L	30 L	B	

§172.101 HAZARDOUS MATERIALS TABLE—Continued

Symbols	Hazardous materials descriptions and proper shipping names	Hazard class or Division	Identification Numbers	PG	Label Codes	Special provisions	(8) Packaging (§173.***)			(9) Quantity limitations		(10) Vessel stowage	
							Exceptions	Nonbulk	Bulk	Passenger aircraft/rail	Cargo aircraft only	Location	Other
(1)	(2)	(3)	(4)	(5)	(6)	(7)	(8A)	(8B)	(8C)	(9A)	(9B)	(10A)	(10B)
	Crotonaldehyde, stabilized	6.1	UN1143	I	6.1, 3	2, B9, B14, B32, B74, B77, T38, T43, T45	None	227	244	Forbidden	30 L	B	40
	Crotonic acid *liquid*	8	UN2823	III	8		154	203	241	5 L	60 L	A	12
	Crotonic acid, *solid*	8	UN2823	III	8		154	213	240	25 kg	100 kg	A	12
	Crotonylene	3	UN1144	I	3	T20	150	201	243	1 L	30 L	E	
	Cupriethylenediamine solution	8	UN1761	II	8, 6.1	T8, T26	None	202	243	1 L	30 L	A	95
				III	8, 6.1	T7	154	203	242	5 L	60 L	A	95
	Cutters, cable, explosive	1.4S	UN0070	II	1.4S		None	62	None	25 kg	100 kg	A	
	Cyanide or cyanide mixtures, dry, see Cyanides, inorganic, solid, n.o.s.												
	Cyanide solutions, n.o.s	6.1	UN1935	I	6.1	B37, T18, T26	None	201	243	1 L	30 L	B	40, 52
				II	6.1	T18, T26	None	202	243	5 L	60 L	A	40, 52
				III	6.1	T18, T26	153	203	241	60 L	220 L	A	40, 52
	Cyanides, inorganic, solid, n.o.s	6.1	UN1588	I	6.1	N74, N75	None	211	242	5 kg	50 kg	A	52
				II	6.1	N74, N75	None	212	242	25 kg	100 kg	A	52
				III	6.1	N74, N75	153	213	240	100 kg	200 kg	A	52
	Cyanogen bromide	6.1	UN1889	I	6.1, 8	A6, A8	None	211	242	1 kg	15 kg	D	40
	Cyanogen chloride, inhibited	2.3	UN1589		2.3, 8	1	None	192	245	Forbidden	Forbidden	D	40
	Cyanogen	2.3	UN1026		2.3, 2.1.	2	None	192	245	Forbidden	Forbidden	D	40
	Cyanuric chloride	8	UN2670	II	8		None	212	240	15 kg	50 kg	A	12, 40
	Cyanuric triazide	Forbidden											
	Cyclobutane	2.1	UN2601		2.1		306	304	314, 315.	Forbidden	150 kg	B	40
	Cyclobutyl chloroformate	6.1	UN2744	II	6.1, 8, 3.	T18	None	202	243	1 L	30 L	A	12, 13, 21, 25, 40, 100
	1,5,9-Cyclododecatriene	6.1	UN2518	III	6.1	T7	153	203	241	60 L	220 L	A	40
	Cycloheptane	3	UN2241	II	3	T1	150	202	242	5 L	60 L	B	40
	Cycloheptatriene	3	UN2603	II	3, 6.1	T14	None	202	243	1 L	60 L	E	40
	Cycloheptene	3	UN2242	II	3	B1, T7	150	202	242	5 L	60 L	B	
	Cyclohexane	3	UN1145	II	3	B101, T8	150	202	242	5 L	60 L	E	
	Cyclohexanone	3	UN1915	III	3	B1, T1	150	203	242	60 L	220 L	A	
	Cyclohexene	3	UN2256	II	3	B101, T7	150	202	242	5 L	60 L	E	
	Cyclohexenyltrichlorosilane	8	UN1762	II	8	A7, B2, N34, T8, T26	None	202	242	Forbidden	30 L	C	40

Cyclohexyl acetate	3	UN2243	III	3	B1, T1	150	203	242	60 L	220 L	A	
Cyclohexyl isocyanate	6.1	UN2488	I	6.1, 3	2,B9, B14,B32, B74,B77, T38, T43, T45	None	227	244	Forbidden	Forbidden	D	20, 40, 95
Cyclohexyl mercaptan	3	UN3054	III	3	B1, T1	150	203	242	60 L	220 L	A	40, 95
Cyclohexylamine	8	UN2357	II	8, 3	B101, T8, T26	None	202	243	1 L	30 L	A	40
Cyclohexyltrichlorosilane	8	UN1763	II	8	A7, B2, N34, T8, T26	None	202	242	Forbidden	30 L	C	40
Cyclonite and cyclotetramethylenetetranitramine mixtures, wetted *or* desensitized *see* RDX and HMX mixtures, wetted *or* desensitized *etc.*												
Cyclonite and HMX mixtures, wetted *or* desensitized *see* RDX and HMX mixtures, wetted *or* desensitized *etc.*												
Cyclonite and octogen mixtures, wetted *or* desensitized *see* RDX and HMX mixtures, wetted *or* desensitized *etc.*												
Cyclonite, *see* Cyclotrimethylenetrinitramine, *etc.*												
Cyclooctadiene phosphines, *see* 9-Phosphabicyclononanes.												
Cyclooctadienes	3	UN2520	III	3	B1, T1	150	203	242	60 L	220 L	A	
Cyclooctatetraene	3	UN2358	II	3	T8	150	202	242	5 L	60 L	B	
Cyclopentane	3	UN1146	II	3	B101, T14	150	202	242	5 L	60 L	E	
Cyclopentane, methyl, see Methylcyclopentane.												
Cyclopentanol	3	UN2244	III	3	B1, T1	150	203	242	60 L	220 L	A	
Cyclopentanone	3	UN2245	III	3	B1, T1	150	203	242	60 L	220 L	A	
Cyclopentene	3	UN2246	II	3	B101, T13	150	202	242	5 L	60 L	E	
Cyclopropane	2.1	UN1027		2.1		306	304	314, 315.	Forbidden	150 kg	E	40
Cyclotetramethylene tetranitramine (dry or unphlegmatized) (HMX).	Forbidden											
Cyclotetramethylenetetranitramine, desensitized *or* Octogen, desensitized *or* HMX, desensitized.	1.1D	UN0484	II	1.1D		None	62	None	Forbidden	Forbidden	B	1E, 5E
Cyclotetramethylenetetranitramine, wetted *or* HMX, wetted *or* Octogen, wetted *with not less than 15 percent water, by mass.*	1.1D	UN0226	II	1.1D		None	62	None	Forbidden	Forbidden	B	1E, 5E
Cyclotrimethylenenitramine and octogen, mixtures, wetted *or* desensitized *see* RDX and HMX mixtures, wetted *or* desensitized *etc.*												

§172.101 HAZARDOUS MATERIALS TABLE—Continued

Symbols	Hazardous materials descriptions and proper shipping names	Hazard class or Division	Identification Numbers	PG	Label Codes	Special provisions	(8) Packaging (§173.***)			(9) Quantity limitations		(10) Vessel stowage	
							Exceptions	Non-bulk	Bulk	Passenger aircraft/rail	Cargo aircraft only	Location	Other
(1)	(2)	(3)	(4)	(5)	(6)	(7)	(8A)	(8B)	(8C)	(9A)	(9B)	(10A)	(10B)
	Cyclotrimethylenetrinitramine and cyclotetramethylenetetranitramine mixtures, wetted *or* desensitized *see* RDX and HMX mixtures, wetted or desensitized *etc.*	.....			.....		.....	.....	.....	.....	.....		
	Cyclotrimethylenetrinitramine and HMX mixtures, wetted *or* desensitized *see* RDX and HMX mixtures, wetted *or* desensitized *etc.*	.....			.....		.....	.....	.....	.....	.....		
	Cyclotrimethylenetrinitramine, desensitized *or* Cyclonite, desensitized *or* Hexogen, desensitized *or* RDX, desensitized.	1.1D	UN0483	II	1.1D ...		None	62	None ..	Forbidden	Forbidden	B	1E, 5E
	Cyclotrimethylenetrinitramine, wetted *or* Cyclonite, wetted *or* Hexogen, wetted *or* RDX, wetted *with not less than 15 percent water by mass.*	1.1D	UN0072	II	1.1D ...		None	62	None ..	Forbidden	Forbidden	B	1E, 5E
	Cymenes	3	UN2046	III	3	B1, T1	150	203	242	60 L	220 L	A	
	Decaborane	4.1	UN1868	II	4.1, 6.1.	A19, A20	None	212	None ..	Forbidden	50 kg	A	
	Decahydronaphthalene	3	UN1147	III	3	B1, T1	150	203	242	60 L	220 L	A	
	n-Decane	3	UN2247	III	3	B1, T1	150	203	242	60 L	220 L	A	
	Deflagrating metal salts of aromatic nitroderivatives, n.o.s.	1.3C	UN0132	II	1.3C ...		None	62	None ..	Forbidden	Forbidden	B	1E, 5E
	Delay electric igniter, see Igniters	.....			.....		.....	.....	.....	.....	.....		
D	Denatured alcohol	3	NA1986	I	3, 6.1	T8, T31	None	201	243	Forbidden	30 L	E	40
	.....	.....		II	3, 6.1	T8, T31	None	202	243	1 L	60 L	E	40
	.....	.....		III	3, 6.1	B1, T8, T31	150	203	242	60 L	220 L	E	40
D	Denatured alcohol	3	NA1987	II	3	T8, T31	150	202	242	5 L	60 L	B	
	.....	.....		III	3	B1, T7, T30	150	203	242	60 L	220 L	A	
	Depth charges, see Charges, depth	.....			.....		.....	.....	.....	.....	.....		
	Detonating relays, see Detonators, *etc.*	.....			.....		.....	.....	.....	.....	.....		
	Detonator assemblies, non-electric *for blasting.*	1.1B	UN0360	II	1.1B ...		None	62	None ..	Forbidden	Forbidden	B	2E, 6E
	Detonator assemblies, non-electric, *for blasting.*	1.4B	UN0361	II	1.4B ...	103	63(f), 63(g).	62	None ..	Forbidden	75 kg	A	24E
	Detonator assemblies, non- electric *for blasting.*	1.4S	UN0500	II	1.4S ...	104	63(f), 63(g).	62	None ..	25 kg	100 kg	A	.....

Detonators, electric, *for blasting*	1.1B	UN0030	II	1.1B ...		63(f), 63(g).	62	None ..	Forbidden	Forbidden	B	2E, 6E
Detonators, electric, *for blasting*	1.4B	UN0255	II	1.4B ...	103	63(f), 63(g).	62	None ..	Forbidden	75 kg	A	24E
Detonators, electric *for blasting*	1.4S	UN0456	II	1.4S ...	104	63(f), 63(g).	62	None ..	25 kg	100 kg	A	
Detonators for ammunition	1.1B	UN0073	II	1.1B ...		None	62	None ..	Forbidden	Forbidden	B	2E, 6E
Detonators for ammunition	1.2B	UN0364	II	1.2B ...		None	62	None ..	Forbidden	Forbidden	B	2E, 6E
Detonators for ammunition	1.4B	UN0365	II	1.4B ...	103	None	62	None ..	Forbidden	75 kg	A	24E
Detonators for ammunition	1.4S	UN0366	II	1.4S ...	104	None	62	None ..	25 kg	100 kg	A	
Detonators, non-electric, *for blasting*	1.1B	UN0029	II	1.1B ...		None	62	None ..	Forbidden	Forbidden	B	2E, 6E
Detonators, non-electric, *for blasting*	1.4B	UN0267	II	1.4B ...	103	63(f), 63(g).	62	None ..	Forbidden	75 kg	A	24E
Detonators, non-electric *for blasting*	1.4S	UN0455	II	1.4S ...	104	None	62	None ..	25 kg	100 kg	A	
Deuterium, compressed	2.1	UN1957		2.1		306	302	None ..	Forbidden	150 kg	E	40
Devices, small, hydrocarbon gas powered *or* Hydrocarbon gas refills for small devices *with release device.*	2.1	UN3150		2.1		306	304	None ..	Forbidden	150 kg	B	40
Di-n-amylamine	3	UN2841	III	3, 6.1	B1, T8	150	203	242	60 L	220 L	A	
Di-n-butyl peroxydicarbonate, with more than 52 percent in solution.	Forbidden			.....		.....	.....	.....				
Di-n-butylamine	8	UN2248	II	8, 3	T8	None	202	243	1 L	30 L	A	
2,2-Di-(tert-butylperoxy) butane, with more than 55 percent in solution.	Forbidden			.....		.....	.....	.....	.....	.....		
Di-(tert-butylperoxy) phthalate, with more than 55 percent in solution.	Forbidden			.....		.....	.....	.....	.....	.....		
2,2-Di-(4,4-di-tert-butylperoxycyclohexyl) propane, with more than 42 percent with inert solid.	Forbidden			.....		.....	.....	.....	.....	.....		
Di-2,4-dichlorobenzoyl peroxide, with more than 75 percent with water.	Forbidden			.....		.....	.....	.....	.....	.....		
1,2-Di-(dimethylamino)ethane	3	UN2372	II	3	T8	150	202	242	5 L	60 L	B	
Di-2-ethylhexyl phosphoric acid, see Diisooctyl acid phosphate.	.....			.....		.....	.....	.....	.....	.....		
Di-(1-hydroxytetrazole) (dry)	Forbidden			.....		.....	.....	.....	.....	.....		
Di-(1-naphthoyl) peroxide	Forbidden			.....		.....	.....	.....	.....	.....		
a,a'-Di-(nitroxy) methylether	Forbidden			.....		.....	.....	.....	.....	.....		
Di-(beta-nitroxyethyl) ammonium nitrate.	Forbidden			.....		.....	.....	.....	.....	.....		
Diacetone alcohol	3	UN1148	II	3	T1	150	202	242	5 L	60 L	B	
.....	.....		III	3	B1, T1	150	203	242	60 L	220 L	A	
Diacetone alcohol peroxides, with more than 57 percent in solution with more than 9 percent hydrogen peroxide, less than 26 percent diacetone alcohol and less than 9 percent water; total active oxygen content more than 9 percent by mass.	Forbidden			.....		.....	.....	.....	.....	.....		

§172.101 HAZARDOUS MATERIALS TABLE—Continued

Symbols	Hazardous materials descriptions and proper shipping names	Hazard class or Division	Identification Numbers	PG	Label Codes	Special provisions	(8) Packaging (§173.***)			(9) Quantity limitations		(10) Vessel stowage	
							Exceptions	Non-bulk	Bulk	Passenger aircraft/rail	Cargo aircraft only	Location	Other
(1)	(2)	(3)	(4)	(5)	(6)	(7)	(8A)	(8B)	(8C)	(9A)	(9B)	(10A)	(10B)
	Diacetyl, see Butanedione												
	Diacetyl peroxide, solid, or with more than 25 percent in solution.	Forbidden											
	Diallylamine	3	UN2359	II	3, 6.1, 8.	T8	None	202	243	1 L	5 L	B	21, 40, 100
	Diallylether	3	UN2360	II	3, 6.1	N12, T8	None	202	243	1 L	60 L	E	40
	4,4'-Diaminodiphenyl methane	6.1	UN2651	III	6.1		153	213	240	100 kg	200 kg	A	
	p-Diazidobenzene	Forbidden											
	1,2-Diazidoethane	Forbidden											
	1,1'-Diazoaminonaphthalene	Forbidden											
	Diazoaminotetrazole (dry)	Forbidden											
	Diazodinitrophenol (dry)	Forbidden											
	Diazodinitrophenol, wetted *with not less than 40 percent water or mixture of alcohol and water, by mass.*	1.1A	UN0074	II	1.1A	111, 117	None	62	None	Forbidden	Forbidden	E	2E, 6E
	Diazodiphenylmethane	Forbidden											
	Diazonium nitrates (dry)	Forbidden											
	Diazonium perchlorates (dry)	Forbidden											
	1,3-Diazopropane	Forbidden											
	Dibenzyl peroxydicarbonate, with more than 87 percent with water.	Forbidden											
	Dibenzyldichlorosilane	8	UN2434	II	8	B2, T8, T26	154	202	242	1 L	30 L	C	40
	Diborane, compressed	2.3	UN1911		2.3, 2.1.	1	None	302	None	Forbidden	Forbidden	D	40, 57
D	Diborane mixtures	2.1	NA1911		2.1	5	None	302	245	Forbidden	Forbidden	D	40, 57
	Dibromoacetylene	Forbidden											
	1,2-Dibromobutan-3-one	6.1	UN2648	II	6.1		None	202	243	5 L	60 L	B	40
	Dibromochloropropane	6.1	UN2872	III	6.1	T7	153	203	241	60 L	220 L	A	
A	Dibromodifluoromethane, *R12B2*	9	UN1941	III	None	T22	155	203	241	100 L	220 L	A	25
	1,2-Dibromoethane, see Ethylene dibromide.												
	Dibromomethane	6.1	UN2664	III	6.1	T7	153	203	241	60 L	220 L	A	
	Dibutyl ethers	3	UN1149	III	3	B1, T1	150	203	242	60 L	220 L	A	
	Dibutylaminoethanol	6.1	UN2873	III	6.1	T1	153	203	241	60 L	220 L	A	
	N,N'-Dichlorazodicarbonamidine (salts of) (dry).	Forbidden											
	1,1-Dichloro-1-nitroethane	6.1	UN2650	II	6.1	T8	None	202	243	5 L	60 L	A	12, 40

D	3,5-Dichloro-2,4,6-trifluoropyridine	6.1	NA9264	I	6.1	2, B9, B14, B32, B74, T38, T43, T45	None	227	244	Forbidden	Forbidden	A	40, 95
	Dichloroacetic acid	8	UN1764	II	8	A3, A6, A7, B2, N34, T9, T27	154	202	242	1 L	30 L	A	
	1,3-Dichloroacetone	6.1	UN2649	II	6.1		None	212	242	25 kg	100 kg	B	12, 40
	Dichloroacetyl chloride	8	UN1765	II	8	A3, A6, A7, B2, B6, N34, T8, T26	154	202	242	1 L	30 L	D	40
	Dichloroacetylene	Forbidden											
	Dichloroanilines, liquid	6.1	UN1590	II	6.1	T14	None	202	243	5 L	60 L	A	40
	Dichloroanilines, solid	6.1	UN1590	II	6.1	T14	None	212	242	25 kg	100 kg	A	40
	o-Dichlorobenzene	6.1	UN1591	III	6.1	T7	153	203	241	60 L	220 L	A	
D	Dichlorobutene	8	NA2920	I	8, 3		None	201	243	0.5 L	2.5 L	C	12, 21, 25, 40, 48
	2,2'-Dichlorodiethyl ether	6.1	UN1916	II	6.1, 3	N33, N34, T8	None	202	243	5 L	60 L	A	
	Dichlorodifluoromethane and difluoroethane azeotropic mixture *or* Refrigerant gas R 500 *with approximately 74 percent dichlorodifluoromethane.*	2.2	UN2602		2.2		306	304	314, 315.	75 kg	150 kg	A	
	Dichlorodifluoromethane *or* Refrigerant gas R 122.	2.2	UN1028		2.2		306	304	314, 315.	75 kg	150 kg	A	
	Dichlorodimethyl ether, symmetrical	6.1	UN2249	I	6.1	T25	None	201	243	Forbidden	Forbidden	D	40
	1,1-Dichloroethane	3	UN2362	II	3	B101, T7	150	202	242	5 L	60 L	B	40
	1,2-Dichloroethane, see Ethylene dichloride.												
	Dichloroethyl sulfide	Forbidden											
	1,2-Dichloroethylene	3	UN1150	II	3	T14	150	202	242	5 L	60 L	B	
	Dichlorofluoromethane *or* Refrigerant gas R 212.	2.2	UN1029		2.2		306	304	314, 315.	75 kg	150 kg	A	
	Dichloroisocyanuric acid, dry *or* Dichloroisocyanuric acid salts.	5.1	UN2465	II	5.1	28	152	212	240	5 kg	25 kg	A	13
	Dichloroisopropyl ether	6.1	UN2490	II	6.1	T8	None	202	243	5 L	60 L	B	
	Dichloromethane	6.1	UN1593	III	6.1	N36, T13	153	203	241	60 L	220 L	A	
	Dichloropentanes	3	UN1152	III	3	B1, T1	150	203	242	60 L	220 L	A	
	Dichlorophenyl isocyanates	6.1	UN2250	II	6.1		None	212	242	25 kg	100 kg	A	25, 40, 48
	Dichlorophenyltrichlorosilane	8	UN1766	II	8	A7, B2, B6, N34, T8, T26	None	202	242	Forbidden	30 L	C	40
	1,2-Dichloropropane	3	UN1279	II	3	N36,T1	150	202	242	5 L	60 L	B	
	1,3-Dichloropropanol-2	6.1	UN2750	II	6.1	T8	None	202	243	5 L	60 L	A	12, 40
	Dichloropropene and propylene dichloride mixture, see Propylene dichloride.												
	Dichloropropenes	3	UN2047	II	3	T8	150	202	242	5 L	60 L	B	
				III	3	B1, T8	150	203	242	60 L	220 L	A	
	Dichlorosilane	2.3	UN2189		2.3, 2.1, 8.	2, B9, B14	None	304	314, 315.	Forbidden	Forbidden	D	17, 40

§172.101 HAZARDOUS MATERIALS TABLE—Continued

Symbols	Hazardous materials descriptions and proper shipping names	Hazard class or Division	Identification Numbers	PG	Label Codes	Special provisions	(8) Packaging (§173.***)			(9) Quantity limitations		(10) Vessel stowage	
							Exceptions	Nonbulk	Bulk	Passenger aircraft/rail	Cargo aircraft only	Location	Other
(1)	(2)	(3)	(4)	(5)	(6)	(7)	(8A)	(8B)	(8C)	(9A)	(9B)	(10A)	(10B)
	1,2-Dichloro-1,1,2,2-Tetrafluoroethane *or* Refrigerant gas R 114.	2.2	UN1958		2.2		306	304	314, 315.	75 kg	150 kg	A	
	Dichlorovinylchloroarsine	Forbidden											
	Dicycloheptadiene, *see* 2,5-Norbornadiene.												
	Dicyclohexylamine	8	UN2565	III	8	T8	154	203	241	5 L	60 L	A	
	Dicyclohexylammonium nitrite	4.1	UN2687	III	4.1		151	213	240	25 kg	100 kg	A	48
	Dicyclopentadiene	3	UN2048	III	3	B1, T1	150	203	242	60 L	220 L	A	
	Didymium nitrate	5.1	UN1465	III	5.1	A1	152	213	240	25 kg	100 kg	A	
D	Dieldrin	6.1	NA2761	II	6.1		None	212	242	0.5 kg	5 kg	A	40
D	Diesel fuel	3	NA1993	III	None	B1	150	203	242	60 L	220 L	A	
	Diethanol nitrosamine dinitrate (dry)	Forbidden											
	Diethoxymethane	3	UN2373	II	3	T8	150	202	242	5 L	60 L	E	
	3,3-Diethoxypropene	3	UN2374	II	3	T1	150	202	242	5 L	60 L	B	
	Diethyl carbonate	3	UN2366	III	3	B1, T1	150	203	242	60 L	220 L	A	
	Diethyl cellosolve, see Ethylene glycol diethyl ether.												
	Diethyl ether *or* Ethyl ether	3	UN1155	I	3	T21	150	201	243	1 L	30 L	E	40
	Diethyl ketone	3	UN1156	II	3	T1	150	202	242	5 L	60 L	B	
	Diethyl peroxydicarbonate, with more than 27 percent in solution.	Forbidden											
	Diethyl sulfate	6.1	UN1594	II	6.1	B101, T14	None	202	243	5 L	60 L	C	
	Diethyl sulfide	3	UN2375	II	3	B101, T14	None	202	243	1 L	60 L	E	
	Diethylamine	3	UN1154	II	3, 8	B101, N34, T8	None	202	243	1 L	5 L	E	40
	2-Diethylaminoethanol	8	UN2686	II	8,3	B2,T15, T26	None	202	243	1 L	30 L	A	
	Diethylaminopropylamine	3	UN2684	III	3, 8	B1, T8	150	203	242	5 L	60 L	A	
	N,N-Diethylaniline	6.1	UN2432	III	6.1	T2	153	203	241	60 L	220 L	A	
	Diethylbenzene	3	UN2049	III	3	B1, T1	150	203	242	60 L	220 L	A	
	Diethyldichlorosilane	8	UN1767	II	8, 3	A7, B6, B100, N34, T8, T26	None	202	243	Forbidden	30 L	C	40
	Diethylene glycol dinitrate	Forbidden											
	Diethyleneglycol dinitrate, desensitized *with not less than 25 percent non-volatile water-insoluble phlegmatizer, by mass.*	1.1D	UN0075	II	1.1D		None	62	None	Forbidden	Forbidden	B	1E, 4E, 21E
	Diethylenetriamine	8	UN2079	II	8	B2, T8	154	202	242	1 L	30 L	A	40
	N,N-Diethylethylenediamine	8	UN2685	II	8, 3	T8	None	202	243	1 L	30 L	A	
	Diethylgold bromide	Forbidden											
	Diethylthiophosphoryl chloride	8	UN2751	II	8	B2, T8	None	212	240	15 kg	50 kg	C	40

Diethylzinc	4.2	UN1366	I	4.2	B11, T28, T40	None	181	244	Forbidden	Forbidden	D	18
Difluorochloroethanes, see 1-Chloro-1,1-difluoroethanes.												
1,1-Difluoroethane *or* Refrigerant gas R 152a.	2.1	UN1030		2.1		306	304	314, 315.	Forbidden	150 kg	B	40
1,1-Difluoroethylene *or* Refrigerant gas R 1132a.	2.1	UN1959		2.1		306	304	None	Forbidden	150 kg	E	40
Difluoromethane *or* Refrigerant gas R 32.	2.1	UN3252		2.1		306	302	314, 315.	Forbidden	150 kg	D	40
Difluorophosphoric acid, anhydrous	8	UN1768	II	8	A6, A7, B2, N5, N34, T9, T27	None	202	242	1 L	30 L	A	40
2,3-Dihydropyran	3	UN2376	II	3	T7	150	202	242	5 L	60 L	B	
1,8-Dihydroxy-2,4,5,7-tetranitroanthraquinone (chrysamminic acid).	Forbidden											
Diiodoacetylene	Forbidden											
Diisobutyl ketone	3	UN1157	III	3	B1, T1	150	203	242	60 L	220 L	A	
Diisobutylamine	3	UN2361	III	3, 8	B1, T1	150	203	242	5 L	60 L	A	
Diisobutylene, isomeric compounds	3	UN2050	II	3	T1	150	202	242	5 L	60 L	B	
Diisooctyl acid phosphate	8	UN1902	III	8	T7	154	203	241	5 L	60 L	A	
Diisopropyl ether	3	UN1159	II	3	B101, T8	150	202	242	5 L	60 L	E	40
Diisopropylamine	3	UN1158	II	3, 8	B101, T8	None	202	243	1 L	5 L	B	
Diisopropylbenzene hydroperoxide, with more than 72 percent in solution.	Forbidden											
Diketene, inhibited	6.1	UN2521	I	6.1, 3	2, B9, B14, B32, B74, T38, T43, T45	None	227	244	Forbidden	Forbidden	D	40, 49
1,2-Dimethoxyethane	3	UN2252	II	3	T1	150	202	242	5 L	60 L	B	
1,1-Dimethoxyethane	3	UN2377	II	3	T13	150	202	242	5 L	60 L	B	
Dimethyl carbonate	3	UN1161	II	3	T8	150	202	242	5 L	60 L	B	
Dimethyl chlorothiophosphate, see Dimethyl thiophosphoryl chloride.												
2,5-Dimethyl-2,5-dihydroperoxy hexane, with more than 82 percent with water.	Forbidden											
Dimethyl disulfide	3	UN2381	II	3	T8	150	202	242	5 L	60 L	B	40
Dimethyl ether	2.1	UN1033		2.1		306	304	314, 315.	Forbidden	150 kg	B	40
Dimethyl-N-propylamine	3	UN2266	II	3, 8	T14, T26	None	202	243	1 L	5 L	B	40
Dimethyl sulfate	6.1	UN1595	I	6.1, 8	2, B9, B14, B32, B74, B77, T38, T43, T45	None	227	244	Forbidden	Forbidden	D	40
Dimethyl sulfide	3	UN1164	II	3	B100, T14	None	202	242	5 L	60 L	E	40
Dimethyl thiophosphoryl chloride	6.1	UN2267	II	6.1, 8	T7	None	202	243	1 L	30 L	B	25
Dimethylamine, anhydrous	2.1	UN1032		2.1		None	304	314, 315.	Forbidden	150 kg	D	40
Dimethylamine solution	3	UN1160	II	3, 8	T8, T34	None	202	243	1 L	5 L	B	
2-Dimethylaminoacetonitrile	3	UN2378	II	3, 6.1	T8	None	202	243	1 L	60 L	A	26, 40
2-Dimethylaminoethanol	8	UN2051	II	8, 3	B2, T8	154	202	243	1 L	30 L	A	

§172.101 HAZARDOUS MATERIALS TABLE—Continued

Symbols	Hazardous materials descriptions and proper shipping names	Hazard class or Division	Identification Numbers	PG	Label Codes	Special provisions	(8) Packaging (§173.***)			(9) Quantity limitations		(10) Vessel stowage	
							Exceptions	Non-bulk	Bulk	Passenger aircraft/rail	Cargo aircraft only	Location	Other
(1)	(2)	(3)	(4)	(5)	(6)	(7)	(8A)	(8B)	(8C)	(9A)	(9B)	(10A)	(10B)
	2-Dimethylaminoethyl acrylate	6.1	UN3302	II	6.1	T8	None	202	243	5 L	60 L	D	25
	2-Dimethylaminoethyl methacrylate	6.1	UN2522	II	6.1	T8	None	202	243	5 L	60 L	B	40
	N,N-Dimethylaniline	6.1	UN2253	II	6.1	T8	None	202	243	5 L	60 L	A	
	2,3-Dimethylbutane	3	UN2457	II	3	T13	150	202	242	5 L	60 L	E	
	1,3-Dimethylbutylamine	3	UN2379	II	3, 8	T8	None	202	243	1 L	5 L	B	
	Dimethylcarbamoyl chloride	8	UN2262	II	8	B2, T8	154	202	242	1 L	30 L	A	40
	Dimethylcyclohexanes	3	UN2263	II	3	T1	150	202	242	5 L	60 L	B	
	Dimethylcyclohexylamine	8	UN2264	II	8, 3	B2, T8	154	202	243	1 L	30 L	A	40
	Dimethyldichlorosilane	3	UN1162	II	3, 8	B77, T15, T26	None	202	243	Forbidden	Forbidden	B	40
	Dimethyldiethoxysilane	3	UN2380	II	3	T8	150	202	242	5 L	60 L	B	
	Dimethyldioxanes	3	UN2707	II	3	T8, T31	150	202	242	5 L	60 L	B	
				III	3	B1, T7, T30	150	203	242	60 L	220 L	A	
	N,N-Dimethylformamide	3	UN2265	III	3	B1, T1	150	203	242	60 L	220 L	A	
	Dimethylhexane dihydroperoxide (dry).	Forbidden											
	Dimethylhydrazine, symmetrical	6.1	UN2382	I	6.1, 3	2, A7, B9, B14, B32, B74, B77, T38, T43, T45	None	227	244	Forbidden	Forbidden	D	40
	Dimethylhydrazine, unsymmetrical	6.1	UN1163	I	6.1, 3, 8.	2, B9, B14, B32, B74, T38, T43, T45	None	227	244	Forbidden	Forbidden	D	21, 38, 40, 100
	2,2-Dimethylpropane	2.1	UN2044		2.1		306	304	314, 315.	Forbidden	150 kg	E	40
	Dimethylzinc	4.2	UN1370	I	4.2	B11, B16, T28, T29, T40	None	181	244	Forbidden	Forbidden	D	18
	Dinitro-o-cresol, *solid*	6.1	UN1598	II	6.1	T14	None	212	242	25 kg	100 kg	A	
	Dinitro-o-cresol, *solution*	6.1	UN1598	II	6.1	T14	None	202	243	5 L	60 L	A	
	1,3-Dinitro-5,5-dimethyl hydantoin	Forbidden											
	Dinitro-7,8-dimethylglycoluril (dry)	Forbidden											
	1,3-Dinitro-4,5-dinitrosobenzene	Forbidden											
	1,4-Dinitro-1,1,4,4-tetramethylolbutanetetranitrate (dry).	Forbidden											
	2,4-Dinitro-1,3,5-trimethylbenzene	Forbidden											
	Dinitroanilines	6.1	UN1596	II	6.1	T14	None	212	242	25 kg	100 kg	A	91
	Dinitrobenzenes, *liquid*	6.1	UN1597	II	6.1	11, T14	None	202	243	5 L	60 L	A	91
	Dinitrobenzenes, *solid*	6.1	UN1597	II	6.1	11	None	212	242	25 kg	100 kg	A	91
	Dinitrochlorobenzene, see Chlorodinitrobenzene.												

1,2-Dinitroethane	Forbidden			.....		.....	.....	.....	.....	.....		
1,1-Dinitroethane (dry)	Forbidden			.....		.....	.....	.....	.....	.....		
Dinitrogen tetroxide	2.3	UN1067		2.3, 5.1, 8.	1, B7, B14, B45, B46, B61, B66, B67, B77	None	336	314	Forbidden	Forbidden	D	40, 89, 90
Dinitroglycoluril *or* Dingu	1.1D	UN0489	II	1.1D		None	62	None	Forbidden	Forbidden	B	1E, 5E
Dinitromethane	Forbidden			.....		.....	.....	.....	.....	.....		
Dinitrophenol, *dry or wetted with less than 15 percent water, by mass.*	1.1D	UN0076	II	1.1D, 6.1.		None	62	None	Forbidden	Forbidden	B	1E, 5E
Dinitrophenol solutions	6.1	UN1599	II	6.1	T8	None	202	243	5 L	60 L	A	36
			III	6.1	T7	153	203	241	60 L	220 L	A	36
Dinitrophenol, wetted *with not less than 15 percent water, by mass.*	4.1	UN1320	I	4.1, 6.1.	23, A8, A19, A20, N41	None	211	None	1 kg	15 kg	E	28, 36
Dinitrophenolates *alkali metals, dry or wetted with less than 15 percent water, by mass.*	1.3C	UN0077	II	1.3C, 6.1.		None	62	None	Forbidden	Forbidden	B	1E, 5E
Dinitrophenolates, wetted *with not less than 15 percent water, by mass.*	4.1	UN1321	I	4.1, 6.1.	23, A8, A19, A20, N41	None	211	None	1 kg	15 kg	E	28, 36
Dinitropropylene glycol	Forbidden			.....		.....	.....	.....	.....	.....		
Dinitroresorcinol, *dry or wetted with less than 15 percent water, by mass.*	1.1D	UN0078	II	1.1D		None	62	None	Forbidden	Forbidden	B	1E, 5E
2,4-Dinitroresorcinol (heavy metal salts of) (dry).	Forbidden			.....		.....	.....	.....	.....	.....		
4,6-Dinitroresorcinol (heavy metal salts of) (dry).	Forbidden			.....		.....	.....	.....	.....	.....		
Dinitroresorcinol, wetted *with not less than 15 percent water, by mass.*	4.1	UN1322	I	4.1	23, A8, A19, A20, N41	None	211	None	1 kg	15 kg	E	28, 36
3,5-Dinitrosalicylic acid (lead salt) (dry).	Forbidden			.....		.....	.....	.....	.....	.....		
Dinitrosobenzene	1.3C	UN0406	II	1.3C		None	62	None	Forbidden	Forbidden	B	1E, 5E
Dinitrosobenzylamidine and salts of (dry).	Forbidden			.....		.....	.....	.....	.....	.....		
2,2-Dinitrostilbene	Forbidden			.....		.....	.....	.....	.....	.....		
Dinitrotoluenes, *liquid*	6.1	UN2038	II	6.1	T8	None	202	243	5 L	60 L	A	
Dinitrotoluenes, molten	6.1	UN1600	II	6.1	B100, T14	None	202	243	Forbidden	Forbidden	C	
Dinitrotoluenes, *solid*	6.1	UN2038	II	6.1	T8	None	212	242	25 kg	100 kg	A	
1,9-Dinitroxy pentamethylene-2,4, 6,8-tetramine (dry).	Forbidden			.....		.....	.....	.....	.....	.....		
Dioxane	3	UN1165	II	3	T8	150	202	242	5 L	60 L	B	
Dioxolane	3	UN1166	II	3	T8	150	202	242	5 L	60 L	B	40
Dipentene	3	UN2052	III	3	B1, T1	150	203	242	60 L	220 L	A	
Diphenylamine chloroarsine	6.1	UN1698	I	6.1		None	201	None	Forbidden	Forbidden	D	40
Diphenylchloroarsine, liquid	6.1	UN1699	I	6.1	A8, B14, B32, N33, N34	None	201	243	Forbidden	30 L	D	40
Diphenylchloroarsine, solid	6.1	UN1699	I	6.1	A8, B14, B32, N33, N34	None	211	242	Forbidden	15 kg	D	40

§172.101 HAZARDOUS MATERIALS TABLE—Continued

Symbols	Hazardous materials descriptions and proper shipping names	Hazard class or Division	Identification Numbers	PG	Label Codes	Special provisions	(8) Packaging (§173.***) Exceptions	Non-bulk	Bulk	(9) Quantity limitations Passenger aircraft/rail	Cargo aircraft only	(10) Vessel stowage Location	Other
(1)	(2)	(3)	(4)	(5)	(6)	(7)	(8A)	(8B)	(8C)	(9A)	(9B)	(10A)	(10B)
	Diphenyldichlorosilane	8	UN1769	II	8	A7, B2, N34, T8, T26	None	202	242	Forbidden	30 L	C	40
I	Diphenylmethane-4,4'diisocyanate	6.1	UN2489	III	6.1	T8	153	203	241	60 L	220 L	A	48
	Diphenylmethyl bromide	8	UN1770	II	8		154	212	240	15 kg	50 kg	D	40
	Dipicryl sulfide, *dry or wetted with less than 10 percent water, by mass.*	1.1D	UN0401	II	1.1D		None	62	None	Forbidden	Forbidden	B	1E, 5E
	Dipicryl sulfide, wetted *with not less than 10 percent water, by mass.*	4.1	UN2852	I	4.1	A2, N41	None	211	None	Forbidden	0.5 kg	D	28
	Dipicrylamine, *see* Hexanitrodiphenylamine.												
	Dipropionyl peroxide, with more than 28 percent in solution.	Forbidden											
	Di-n-propyl ether	3	UN2384	II	3	T1	150	202	242	5 L	60 L	B	
	Dipropyl ketone	3	UN2710	III	3	B1, T1	150	203	242	60 L	220 L	A	
	Dipropylamine	3	UN2383	II	3, 8	T8	None	202	243	1 L	5 L	B	
	Disinfectant, liquid, corrosive, n.o.s	8	UN1903	I	8	A7, B10, T42	None	201	243	0.5 L	2.5 L	B	
	Disinfectants, liquid, corrosive n.o.s	8	UN1903	II	8	B2	154	202	242	1 L	30 L	B	
				III	8		154	203	241	5 L	60 L	A	
	Disinfectants, liquid, toxic, n.o.s	6.1	UN3142	I	6.1	A4, T42	None	201	243	1 L	30 L	A	40
				II	6.1	T14	None	202	243	5 L	60 L	A	40
				III	6.1	T7	153	203	241	60 L	220 L	A	40
	Disinfectants, solid, toxic, n.o.s	6.1	UN1601	II	6.1		None	212	242	25 kg	100 kg	A	40
				III	6.1		153	213	240	100 kg	200 kg	A	40
	Disodium trioxosilicate	8	UN3253	III	8		154	213	240	25 kg	100 kg	A	
	Dispersant gases, n.o.s. *see* Refrigerant gases, n.o.s.												
	Dithiocarbamate pesticides, liquid, flammable, toxic, *flash point less than 23 degrees C.*	3	UN2772	I	3, 6.1		None	201	243	Forbidden	30 L	B	40
				II	3, 6.1		None	202	243	1 L	60 L	B	40
	Dithiocarbamate pesticides, liquid, toxic.	6.1	UN3006	I	6.1	T42	None	201	243	1 L	30 L	B	40
				II	6.1	T14	None	202	243	5 L	60 L	B	40
				III	6.1	T14	153	203	241	60 L	220 L	A	40
	Dithiocarbamate pesticides, liquid, toxic, flammable, *flashpoint not less than 23 degrees C.*	6.1	UN3005	I	6.1, 3	T42	None	201	243	1 L	30 L	B	40
				II	6.1, 3	T14	None	202	243	5 L	60 L	B	40

	.....	.....		III	6.1, 3	T14	153	203	242	60 L	220 L	A	40
	Dithiocarbamate pesticides, solid, toxic.	6.1	UN2771	I	6.1		None	211	242	5 kg	50 kg	A	40
	.....	.....		II	6.1		None	212	242	25 kg	100 kg	A	40
	.....	.....		III	6.1		153	213	240	100 kg	200 kg	A	40
	Divinyl ether, inhibited	3	UN1167	I	3	T14	None	201	243	1 L	60 L	E	40
D	Dodecylbenzenesulfonic acid	8	NA2584	II	8	B2	154	202	242	1 L	30 L	B	9
	Dodecyltrichlorosilane	8	UN1771	II	8	A7, B2, B6, N34, T8, T26	None	202	242	Forbidden	30 L	C	40
	Dry ice, *see* Carbon dioxide, solid	.....			.....		.....	.....	.....	.....	.....		
	Dyes, liquid, corrosive, n.o.s. or Dye intermediates, liquid, corrosive, n.o.s..	8	UN2801	I	8	11, B10	None	201	243	0.5 L	2.5 L	A	.....
	.....	.....		II	8	11, B2, T14	154	202	242	1 L	30 L	A	
	.....	.....		III	8	11, T7	154	203	241	5 L	60 L	A	
	Dyes, liquid, toxic, n.o.s *or* Dye intermediates, liquid, toxic, n.o.s.	6.1	UN1602	II	6.1		None	202	243	5 L	60 L	A	
	.....	.....		III	6.1		153	203	241	60 L	220 L	A	
	Dyes, solid, corrosive, n.o.s. *or* Dye intermediates, solid, corrosive, n.o.s.	8	UN3147	II	8		154	212	240	15 kg	50 kg	A	
	.....	.....		III	8		154	213	240	25 kg	100 kg	A	
	Dyes, solid, toxic, n.o.s. *or* Dye intermediates, solid, toxic, n.o.s.	6.1	UN3143	I	6.1	A5	None	211	242	5 kg	50 kg	A	
	.....	.....		II	6.1		None	212	242	25 kg	100 kg	A	
	.....	.....		III	6.1		153	213	240	100 kg	200 kg	A	
	Dynamite, see Explosive, blasting, type A.	.....			.....		.....	.....	.....	.....	.....		
	Electrolyte (acid or alkali) for batteries, see Battery fluid, acid *or* Battery fluid, alkali.	.....			.....		.....	.....	.....	.....	.....		
	Elevated temperature liquid, flammable, n.o.s.*, with flash point above 37.8 C, at or above its flash point.*	3	UN3256	III	3	T1	None	None ..	247	Forbidden	Forbidden	A	
	Elevated temperature liquid, n.o.s.*, at or above 100 C and below its flash point.*	9	UN3257	III	9	T1	None	None ..	247	Forbidden	Forbidden	A	85
	Elevated temperature solid, n.o.s., *at or above 240 C, see section 173.247(h)(4).*	9	UN3258	III	9		247(h)(4).	None ..	247	Forbidden	Forbidden	A	85
	Engines, internal combustion, *including when fitted in machinery or vehicles.*	9	UN3166		9		220	220	None ..	Forbidden	No limit	A	
	Environmentally hazardous substances, liquid, n.o.s.	9	UN3082	III	9	8, T1	155	203	241	None	None	A	
	Environmentally hazardous substances, solid, n.o.s.	9	UN3077	III	9	8, B54	155	213	240	None	None	A	
	Epibromohydrin	6.1	UN2558	I	6.1, 3	T18, T26	None	201	243	Forbidden	Forbidden	D	40
	Epichlorohydrin	6.1	UN2023	II	6.1, 3	T14	None	202	243	5 L	60 L	A	40

§172.101 HAZARDOUS MATERIALS TABLE—Continued

Symbols	Hazardous materials descriptions and proper shipping names	Hazard class or Division	Identification Numbers	PG	Label Codes	Special provisions	(8) Packaging (§173.***) Exceptions	Non-bulk	Bulk	(9) Quantity limitations Passenger aircraft/rail	Cargo aircraft only	(10) Vessel stowage Location	Other
(1)	(2)	(3)	(4)	(5)	(6)	(7)	(8A)	(8B)	(8C)	(9A)	(9B)	(10A)	(10B)
	1,2-Epoxy-3-ethoxypropane	3	UN2752	III	3	B1, T1	150	203	242	60 L	220 L	A	
	Esters, n.o.s	3	UN3272	II	3	T8	150	202	242	5 L	60 L	B	
				III	3	B1, T7	150	203	242	60 L	220 L	A	
	Etching acid, liquid, n.o.s., see Hydrofluoric acid, solution *etc.*												
	Ethane	2.1	UN1035		2.1		306	304	302	Forbidden	150 kg	E	40
D	Ethane-Propane mixture, refrigerated liquid.	2.1	NA1961		2.1		None	316	314, 315.	Forbidden	Forbidden	D	40
	Ethane, refrigerated liquid	2.1	UN1961		2.1		None	None	315	Forbidden	Forbidden	D	40
	Ethanol amine dinitrate	Forbidden											
	Ethanol *or* Ethyl alcohol *or* Ethanol solutions *or* Ethyl alcohol solutions.	3	UN1170	II	3	24, T1	150	202	242	5 L	60 L	A	
				III	3	24, B1, T1	150	203	242	60 L	220 L	A	
	Ethanolamine *or* Ethanolamine solutions.	8	UN2491	III	8	T7	154	203	241	5 L	60 L	A	
	Ether, see Diethyl ether												
	Ethers, n.o.s	3	UN3271	II	3	T8	150	202	242	5 L	60 L	B	
				III	3	B1, T7	150	203	242	60 L	220 L	A	
	Ethyl acetate	3	UN1173	II	3	T2	150	202	242	5 L	60 L	B	
	Ethyl acrylate, inhibited	3	UN1917	II	3	T8	150	202	242	5 L	60 L	B	40
	Ethyl alcohol, *see* Ethanol												
	Ethyl aldehyde, see Acetaldehyde												
	Ethyl amyl ketone	3	UN2271	III	3	B1, T1	150	203	242	60 L	220 L	A	
	N-Ethyl-N-benzylaniline	6.1	UN2274	III	6.1	T2	153	203	241	60 L	220 L	A	
	Ethyl borate	3	UN1176	II	3	T8	150	202	242	5 L	60 L	B	
	Ethyl bromide	6.1	UN1891	II	6.1	B100, T17	None	202	243	5 L	60 L	B	40, 85
	Ethyl bromoacetate	6.1	UN1603	II	6.1, 3	T14	None	202	243	Forbidden	Forbidden	D	40
	Ethyl butyl ether	3	UN1179	II	3	B1, B101, T1	150	202	242	5 L	60 L	B	
	Ethyl butyrate	3	UN1180	III	3	B1, T1	150	203	242	60 L	220 L	A	
	Ethyl chloride	2.1	UN1037		2.1	B43, B77	None	322	314, 315.	Forbidden	150 kg	B	40
	Ethyl chloroacetate	6.1	UN1181	II	6.1, 3	T14	None	202	243	5 L	60 L	A	
	Ethyl chloroformate	6.1	UN1182	I	6.1, 3, 8.	2, A3, A6, A7, B9, B14, B32, B74, N34, T38, T43, T45	None	227	244	Forbidden	Forbidden	D	21, 40, 100
	Ethyl 2-chloropropionate	3	UN2935	III	3	B1, T1	150	203	242	60 L	220 L	A	

+	Ethyl chlorothioformate	8	UN2826	II	8, 6.1, 3.	2, B9, B14, B32, B74, T38, T43, T45	None	227	244	Forbidden	Forbidden	A	40
	Ethyl crotonate	3	UN1862	II	3	T1	150	202	242	5 L	60 L	B	
	Ethyl cyanoacetate	6.1	UN2666	III	6.1	T8	153	203	241	60 L	220 L	A	26
	Ethyl ether, *see* Diethyl ether												
	Ethyl fluoride *or* Refrigerant gas R 161.	2.1	UN2453		2.1		306	304	314, 315.	Forbidden	150 kg	E	40
	Ethyl formate	3	UN1190	II	3	T8	150	202	242	5 L	60 L	E	
	Ethyl hydroperoxide	Forbidden											
	Ethyl isobutyrate	3	UN2385	II	3	T1	150	202	242	5 L	60 L	B	
+	Ethyl isocyanate	3	UN2481	I	3, 6.1	1, A7, B9, B14, B30, B72, T38, T43, T44	None	226	244	Forbidden	Forbidden	D	40
	Ethyl lactate	3	UN1192	III	3	B1, T1	150	203	242	60 L	220 L	A	
	Ethyl mercaptan	3	UN2363	I	3	T21	None	201	243	Forbidden	30 L	E	95, 102
	Ethyl methacrylate	3	UN2277	II	3	T1	150	202	242	5 L	60 L	B	
	Ethyl methyl ether	2.1	UN1039		2.1	B43	None	201	314, 315.	Forbidden	150 kg	B	40
	Ethyl methyl ketone *or* Methyl ethyl ketone.	3	UN1193	II	3	T8	150	202	242	5 L	60 L	B	
	Ethyl nitrite solutions	3	UN1194	I	3, 6.1		None	201	None	Forbidden	Forbidden	E	40, 105
	Ethyl orthoformate	3	UN2524	III	3	B1, T7	150	203	242	60 L	220 L	A	
	Ethyl oxalate	6.1	UN2525	III	6.1	T1	153	203	241	60 L	220 L	A	
	Ethyl perchlorate	Forbidden											
D	Ethyl phosphonothioic dichloride, anhydrous.	6.1	NA2927	I	6.1, 8	2, B9, B14, B32, B74, T38, T43, T45	None	227	244	Forbidden	Forbidden	D	20, 40, 95
D	Ethyl phosphonous dichloride, anhydrous *pyrophoric liquid.*	6.1	NA2845	I	6.1, 4.2.	2, B9, B14, B32, B74, T38, T43, T45	None	227	244	Forbidden	Forbidden	D	18
D	Ethyl phosphorodichloridate	6.1	NA2927	I	6.1, 8	2, B9, B14, B32, B74, T38, T43, T45	None	227	244	Forbidden	Forbidden	D	20, 40, 95
	Ethyl propionate	3	UN1195	II	3	T1	150	202	242	5 L	60 L	B	
	Ethyl propyl ether	3	UN2615	II	3	B101, T8	150	202	242	5 L	60 L	E	
	Ethyl silicate, see Tetraethyl silicate												
	Ethylacetylene, inhibited	2.1	UN2452		2.1		None	304	314, 315.	Forbidden	150 kg	B	40
	Ethylamine	2.1	UN1036		2.1	B77	None	321	314, 315.	Forbidden	150 kg	D	40
	Ethylamine, aqueous solution *with not less than 50 percent but not more than 70 percent ethylamine.*	3	UN2270	II	3, 8	T14	None	202	243	1 L	5 L	B	40
	N-Ethylaniline	6.1	UN2272	III	6.1	T2	153	203	241	60 L	220 L	A	
	2-Ethylaniline	6.1	UN2273	III	6.1	T2	153	203	241	60 L	220 L	A	
	Ethylbenzene	3	UN1175	II	3	T1	150	202	242	5 L	60 L	B	
	N-Ethylbenzyltoluidines liquid	6.1	UN2753	III	6.1	T14	153	203	241	60 L	220 L	A	

§172.101 HAZARDOUS MATERIALS TABLE—Continued

Symbols	Hazardous materials descriptions and proper shipping names	Hazard class or Division	Identification Numbers	PG	Label Codes	Special provisions	(8) Packaging (§173.***)			(9) Quantity limitations		(10) Vessel stowage	
							Exceptions	Nonbulk	Bulk	Passenger aircraft/rail	Cargo aircraft only	Location	Other
(1)	(2)	(3)	(4)	(5)	(6)	(7)	(8A)	(8B)	(8C)	(9A)	(9B)	(10A)	(10B)
	N-Ethylbenzyltoluidines solid	6.1	UN2753	III	6.1		153	213	240	100 kg	200 kg	A	
	2-Ethylbutanol	3	UN2275	III	3	B1, T1	150	203	242	60 L	220 L	A	
	2-Ethylbutyl acetate	3	UN1177	III	3	B1, T1	150	203	242	60 L	220 L	A	
	2-Ethylbutyraldehyde	3	UN1178	II	3	B1, T1	150	202	242	5 L	60 L	B	
	Ethyldichloroarsine	6.1	UN1892	I	6.1	2, B9, B14, B32, B74, T38, T43, T45	None	227	244	Forbidden	Forbidden	D	40
	Ethyldichlorosilane	4.3	UN1183	I	4.3, 8, 3.	A2, A3, A7, N34, T18, T26	None	201	244	Forbidden	1 L	D	21, 28, 40, 49, 100
	Ethylene, acetylene and propylene in mixture, refrigerated liquid *with at least 71.5 percent ethylene with not more than 22.5 percent acetylene and not more than 6 percent propylene.*	2.1	UN3138		2.1		None	304	314, 315.	Forbidden	Forbidden	D	40
	Ethylene chlorohydrin	6.1	UN1135	I	6.1, 3	2, B9, B14, B32, B74, T38, T43, T45	None	227	244	Forbidden	Forbidden	D	40
	Ethylene, compressed	2.1	UN1962		2.1		306	304	302	Forbidden	150 kg	E	40
	Ethylene diamine diperchlorate	Forbidden											
	Ethylene dibromide	6.1	UN1605	I	6.1	2, B9, B14, B32, B74, B77, T38, T43, T45	None	227	244	Forbidden	Forbidden	D	40
	Ethylene dibromide and methyl bromide liquid mixtures, see Methyl bromide and ethylene dibromide, liquid mixtures.												
	Ethylene dichloride	3	UN1184	II	3, 6.1	T14	None	202	243	1 L	60 L	B	40
	Ethylene glycol diethyl ether	3	UN1153	III	3	B1, T1	150	203	242	60 L	220 L	A	
	Ethylene glycol dinitrate	Forbidden											
	Ethylene glycol monoethyl ether	3	UN1171	III	3	B1, T1	150	203	242	60 L	220 L	A	
	Ethylene glycol monoethyl ether acetate.	3	UN1172	III	3	B1, T1	150	203	242	60 L	220 L	A	
	Ethylene glycol monomethyl ether	3	UN1188	III	3	B1, T1	150	203	242	60 L	220 L	A	
	Ethylene glycol monomethyl ether acetate.	3	UN1189	III	3	B1, T1	150	203	242	60 L	220 L	A	

Ethylene oxide and carbon dioxide mixture *with more than 87 percent ethylene oxide.*	2.3	UN3300		2.3, 2.1.	4	None	304	314, 315.	Forbidden	Forbidden	D	40
Ethylene oxide and carbon dioxide mixtures *with more than 9 percent but not more than 87 percent ethylene oxide.*	2.1	UN1041		2.1		306	304	314, 315.	Forbidden	25 kg	B	40
Ethylene oxide and carbon dioxide mixtures *with not more than 9 percent ethylene oxide.*	2.2	UN1952		2.2		306	304	314, 315.	75 kg	150 kg	A	
Ethylene oxide and chlorotetrafluoroethane mixture *with not more than 8.8 percent ethylene oxide.*	2.2	UN3297		2.2		306	304	314, 315.	75 kg	150 kg	A	
Ethylene oxide and dichlorodifluoromethane mixture, *with not more than 12.5 percent ethylene oxide.*	2.2	UN3070		2.2		306	304	314, 315.	75 kg	150 kg	A	
Ethylene oxide and pentafluoroethane mixture *with not more than 7.9 percent ethylene oxide.*	2.2	UN3298		2.2		306	304	314, 315.	75 kg	150 kg	A	
Ethylene oxide and propylene oxide mixtures*, with not more than 30 percent ethylene oxide.*	3	UN2983	I	3, 6.1	5, A11, N4, N34, T24, T29	None	201	243	Forbidden	30 L	E	40
Ethylene oxide and tetrafluoroethane mixture *with not more than 5.6 percent ethylene oxide.*	2.2	UN3299		2.2		306	304	314, 315.	75 kg	150 kg	A	
Ethylene oxide *or* Ethylene oxide with nitrogen *up to a total pressure of 1MPa (10 bar) at 50 degrees C.*	2.3	UN1040		2.3, 2.1.	4	None	323	323	Forbidden	25 kg	D	40
Ethylene, refrigerated liquid *(cryogenic liquid).*	2.1	UN1038		2.1		None	316	318, 319.	Forbidden	Forbidden	D	40
Ethylenediamine	8	UN1604	II	8, 3	T14	154	202	243	1 L	30 L	A	40
Ethyleneimine, inhibited	6.1	UN1185	I	6.1, 3	1, B9, B14, B30, B72, B77, N25, N32, T38, T43, T44	None	226	244	Forbidden	Forbidden	D	40
Ethylhexaldehyde, see Octyl aldehydes *etc.*	.....			.....		.....	.....	.....	.....	.....		
2-Ethylhexyl chloroformate	6.1	UN2748	II	6.1, 8	T12	None	202	243	1 L	30 L	A	12, 13, 21, 25, 40, 100
2-Ethylhexylamine	3	UN2276	III	3, 8	B1, T2	150	203	242	5 L	60 L	A	40
Ethylphenyldichlorosilane	8	UN2435	II	8	A7, B2, N34, T8, T26	None	202	242	Forbidden	30 L	C	
1-Ethylpiperidine	3	UN2386	II	3, 8	T8	None	202	243	1 L	5 L	B	
N-Ethyltoluidines	6.1	UN2754	II	6.1	T14	None	202	243	5 L	60 L	A	
Ethyltrichlorosilane	3	UN1196	II	3, 8	A7, B100, N34, T15, T26	None	202	243	1 L	5 L	B	40

§172.101 HAZARDOUS MATERIALS TABLE—Continued

Symbols	Hazardous materials descriptions and proper shipping names	Hazard class or Division	Identification Numbers	PG	Label Codes	Special provisions	(8) Packaging (§173.***)			(9) Quantity limitations		(10) Vessel stowage	
							Exceptions	Non-bulk	Bulk	Passenger aircraft/rail	Cargo aircraft only	Location	Other
(1)	(2)	(3)	(4)	(5)	(6)	(7)	(8A)	(8B)	(8C)	(9A)	(9B)	(10A)	(10B)
	Etiologic agent, see Infectious substances, *etc.*	.....			.....		.....	.....	.....	.....	.....		
	Explosive articles, see Articles, explosive , n.o.s. *etc.*	.....			.....		.....	.....	.....	.....	.....		
	Explosive, blasting, type A	1.1D	UN0081	II	1.1D ...		None	62	None ..	Forbidden	Forbidden	B	1E, 5E, 21E
	Explosive, blasting, type B	1.1D	UN0082	II	1.1D ...		None	62	None ..	Forbidden	Forbidden	B	1E, 5E
	Explosive, blasting, type B *or* Agent blasting, Type B.	1.5D	UN0331	II	1.5D ...	105, 106	None	62	None ..	Forbidden	Forbidden	B	1E, 5E
	Explosive, blasting, type C	1.1D	UN0083	II	1.1D ...	123	None	62	None ..	Forbidden	Forbidden	B	1E, 5E
	Explosive, blasting, type D	1.1D	UN0084	II	1.1D ...		None	62	None ..	Forbidden	Forbidden	B	1E, 5E
	Explosive, blasting, type E	1.1D	UN0241	II	1.1D ...		None	62	None ..	Forbidden	Forbidden	B	1E, 5E, 19E
	Explosive, blasting, type E *or* Agent blasting, Type E.	1.5D	UN0332	II	1.5D ...	105, 106	None	62	None ..	Forbidden	Forbidden	B	1E, 5E
	Explosive, forbidden. See Sec. 173.54.	Forbidden			.....		.....	.....	.....	.....	.....		
	Explosive substances, see Substances, explosive, n.o.s. *etc.*	.....			.....		.....	.....	.....	.....	.....		
	Explosives, slurry, see Explosive, blasting, type E.	.....			.....		.....	.....	.....	.....	.....		
	Explosives, water gels, see Explosive, blasting, type E.	.....			.....		.....	.....	.....	.....	.....		
	Extracts, aromatic, liquid	3	UN1169	II	3	T7, T30	150	202	242	5 L	60 L	B	
	.....	.....		III	3	B1, T7, T30	150	203	242	60 L	220 L	A	
	Extracts, flavoring, liquid	3	UN1197	II	3	T7, T30	150	202	242	5 L	60 L	B	
	.....	.....		III	3	B1, T7, T30	150	203	242	60 L	220 L	A	
	Fabric with animal or vegetable oil, see Fibers *or* fabrics, *etc.*	.....			.....		.....	.....	.....	.....	.....		
	Ferric arsenate	6.1	UN1606	II	6.1		None	212	242	25 kg	100 kg	A	
	Ferric arsenite	6.1	UN1607	II	6.1		None	212	242	25 kg	100 kg	A	
	Ferric chloride, anhydrous	8	UN1773	III	8		154	213	240	25 kg	100 kg	A	
	Ferric chloride, solution	8	UN2582	III	8	B15, T8	154	203	241	5 L	60 L	A	
	Ferric nitrate	5.1	UN1466	III	5.1	A1, A29	152	213	240	25 kg	100 kg	A	
	Ferrocerium	4.1	UN1323	II	4.1	59, A19	151	212	240	15 kg	50 kg	A	
	Ferrosilicon, *with 30 percent or more but less than 90 percent silicon.*	4.3	UN1408	III	4.3, 6.1.	A1, A19	151	213	240	25 kg	100 kg	A	13, 40, 85, 103
	Ferrous arsenate	6.1	UN1608	II	6.1		None	212	242	25 kg	100 kg	A	

D	Ferrous chloride, solid	8	NA1759	II	8		154	212	240	15 kg	50 kg	A	
D	Ferrous chloride, solution	8	NA1760	II	8	B3	154	202	242	1 L	30 L	B	40
	Ferrous metal borings *or* Ferrous metal shavings *or* Ferrous metal turnings *or* Ferrous metal cuttings *in a form liable to self-heating.*	4.2	UN2793	III	4.2	A1, A19, B101	None	213	241	25 kg	100 kg	A	
	Fertilizer ammoniating solution *with free ammonia.*	2.2	UN1043		2.2		306	304	314, 315.	Forbidden	150 kg	E	40
AIW	Fibers *or* Fabrics, animal *or* vegetable *or* Synthentic, n.o.s. *with animal or vegetable oil.*	4.2	UN1373	III	4.2		None	213	241	Forbidden	Forbidden	A	
	Fibers *or* Fabrics impregnated with weakly nitrated nitrocellulose, n.o.s.	4.1	UN1353	III	4.1	A1	None	213	240	25 kg	100 kg	D	
	Films, nitrocellulose base, from which gelatine has been removed; film scrap, see Celluloid scrap.												
	Films, nitrocellulose base, *gelatine coated (except scrap).*	4.1	UN1324	III	4.1		None	183	None	25 kg	100 kg	D	91
	Fire extinguisher charges, *corrosive liquid.*	8	UN1774	II	8	N41	154	202	None	1 L	30 L	A	
	Fire extinguisher charges, expelling, explosive, see Cartridges, power device.												
	Fire extinguishers *containing compressed or liquefied gas.*	2.2	UN1044		2.2	18	309	309	None	75 kg	150 kg	A	
	Firelighters, solid *with flammable liquid.*	4.1	UN2623	III	4.1	A1, A19	None	213	None	25 kg	100 kg	A	
	Fireworks	1.1G	UN0333	II	1.1G	108	None	62	None	Forbidden	Forbidden	B	
	Fireworks	1.2G	UN0334	II	1.2G	108	None	62	None	Forbidden	Forbidden	B	
	Fireworks	1.3G	UN0335	II	1.3G	108	None	62	None	Forbidden	Forbidden	B	
	Fireworks	1.4G	UN0336	II	1.4G	108	None	62	None	Forbidden	75 kg	A	24E
	Fireworks	1.4S	UN0337	II	1.4S	108	None	62	None	25 kg	100 kg	A	
W	Fish meal, stabilized *or* Fish scrap, stabilized.	9	UN2216	III	None		155	218	218	No limit	No limit	A	88
	Fish meal, unstablized *or* Fish scrap, unstabilized.	4.2	UN1374	II	4.2	A1, A19	None	212	241	15 kg	50 kg	A	119, 120
	Fissile radioactive materials, see Radioactive material, fissile, n.o.s.												
	Flammable compressed gas, see Compressed *or* Liquefied gas, flammable, *etc.*												
	Flammable compressed gas (small receptacles not fitted with a dispersion device, not refillable), see Receptacles, *etc.*												
	Flammable gas in lighters, see Lighters *or* lighter refills, *cigarettes, containing flammable gas.*												
	Flammable liquid, toxic, corrosive, n.o.s.	3	UN3286	I	3, 6.1, 8.		None	201	243	Forbidden	2.5 L	E	21, 40, 100

§172.101 HAZARDOUS MATERIALS TABLE—Continued

Symbols	Hazardous materials descriptions and proper shipping names	Hazard class or Division	Identification Numbers	PG	Label Codes	Special provisions	(8) Packaging (§173.***)			(9) Quantity limitations		(10) Vessel stowage	
							Exceptions	Non-bulk	Bulk	Passenger aircraft/rail	Cargo aircraft only	Location	Other
(1)	(2)	(3)	(4)	(5)	(6)	(7)	(8A)	(8B)	(8C)	(9A)	(9B)	(10A)	(10B)
	.....	.....		II	3, 6.1, 8.	T14	None	202	243	1 L	5 L	B	21, 40, 100
	Flammable liquids, corrosive, n.o.s ..	3	UN2924	I	3, 8	T42	None	201	243	0.5 L	2.5 L	E	40
	.....	.....		II	3, 8	T15, T26	None	202	243	1 L	5 L	B	40
	.....	.....		III	3, 8	B1, T15, T26	150	203	242	5 L	60 L	A	40
	Flammable liquids, n.o.s	3	UN1993	I	3	T42	150	201	243	1 L	30 L	E	
	.....	.....		II	3	T8, T31	150	202	242	5 L	60 L	B	
	.....	.....		III	3	B1, B52, T7, T30	150	203	242	60 L	220 L	A	
	Flammable liquids, toxic, n.o.s	3	UN1992	I	3, 6.1	T42	None	201	243	Forbidden	30 L	E	40
	.....	.....		II	3, 6.1	T18	None	202	243	1 L	60 L	B	40
	.....	.....		III	3, 6.1	B1, T18	150	203	242	60 L	220 L	A	
	Flammable solid, corrosive, inorganic, n.o.s.	4.1	UN3180	II	4.1, 8	A1, B106	151	212	242	15 kg	50 kg	D	40
	.....	.....		III	4.1, 8	A1, B106	151	213	242	25 kg	100 kg	D	40
	Flammable solid, inorganic, n.o.s	4.1	UN3178	II	4.1	A1	151	212	240	15 kg	50 kg	B	
	.....	.....		III	4.1	A1	151	213	240	25 kg	100 kg	B	
	Flammable solid, organic, molten, n.o.s.	4.1	UN3176	II	4.1	T9	151	212	240	Forbidden	Forbidden	C	
	.....	.....		III	4.1	T9	151	213	240	Forbidden	Forbidden	C	
	Flammable solid, toxic, inorganic, n.o.s.	4.1	UN3179	II	4.1, 6.1.	A1, B106	151	212	242	15 kg	50 kg	B	40
	.....	.....		III	4.1, 6.1.	A1, B106	151	213	242	25 kg	100 kg	B	40
	Flammable solids, corrosive, organic, n.o.s.	4.1	UN2925	II	4.1, 8	A1, B106	None	212	242	15 kg	50 kg	D	40
	.....	.....		III	4.1, 8	A1, B106	151	213	242	25 kg	100 kg	D	40
	Flammable solids, organic, n.o.s	4.1	UN1325	II	4.1	A1	151	212	240	15 kg	50 kg	B	
	.....	.....		III	4.1	A1	151	213	240	25 kg	100 kg	B	
	Flammable solids, toxic, organic, n.o.s.	4.1	UN2926	II	4.1, 6.1.	A1, B106	None	212	242	15 kg	50 kg	B	40
	.....	.....		III	4.1, 6.1.	A1, B106	151	213	242	25 kg	100 kg	B	40
	Flares, aerial	1.3G	UN0093	II	1.3G ...		None	62	None ..	Forbidden	75 kg	B	
	Flares, aerial	1.4G	UN0403	II	1.4G ...		None	62	None ..	Forbidden	75 kg	A	24E
	Flares, aerial	1.4S	UN0404	II	1.4S ...		None	62	None ..	25 kg	100 kg	A	
	Flares, aerial	1.1G	UN0420	II	1.1G ...		None	62	None ..	Forbidden	Forbidden	B	
	Flares, aerial	1.2G	UN0421	II	1.2G ...		None	62	None ..	Forbidden	Forbidden	B	
	Flares, airplane, see Flares, aerial ...	.....			.....		.....	.....	.....	.....	.....		
	Flares, signal, see Cartridges, signal	.....			.....		.....	.....	.....	.....	.....		

	Flares, surface	1.3G	UN0092	II	1.3G		None	62	None	Forbidden	75 kg	B	
	Flares, surface	1.1G	UN0418	II	1.1G		None	62	None	Forbidden	Forbidden	B	
	Flares, surface	1.2G	UN0419	II	1.2G		None	62	None	Forbidden	Forbidden	B	
	Flares, water-activated, see Contrivances, water-activated, *etc.*												
	Flash powder	1.1G	UN0094	II	1.1G		None	62	None	Forbidden	Forbidden	E	1E, 5E
	Flash powder	1.3G	UN0305	II	1.3G		None	62	None	Forbidden	Forbidden	E	1E, 5E
	Flue dusts, poisonous, see Arsenical dust.												
	Fluoric acid, see Hydrofluoric acid, solution, *etc.*												
	Fluorine, compressed	2.3	UN1045		2.3, 5.1, 8.	1	None	302	None	Forbidden	Forbidden	D	40, 89, 90
	Fluoroacetic acid	6.1	UN2642	I	6.1	B100	None	211	242	1 kg	15 kg	E	
	Fluoroanilines	6.1	UN2941	III	6.1	T8	153	203	241	60 L	220 L	A	
	Fluorobenzene	3	UN2387	II	3	B101, T8	150	202	242	5 L	60 L	B	
	Fluoroboric acid	8	UN1775	II	8	A6, A7, B2, B15, N3, N34, T15, T27	154	202	242	1 L	30 L	A	
	Fluorophosphoric acid anhydrous	8	UN1776	II	8	A6, A7, B2, N3, N34, T9, T27	None	202	242	1 L	30 L	A	
	Fluorosilicates, n.o.s	6.1	UN2856	III	6.1		153	213	240	100 kg	200 kg	A	26
	Fluorosilicic acid	8	UN1778	II	8	A6, A7, B2, B15, N3, N34, T12, T27	None	202	242	1 L	30 L	A	
	Fluorosulfonic acid	8	UN1777	I	8	A3, A6, A7, A10, B6, B10, N3, T9, T27	None	201	243	0.5 L	2.5 L	D	40
	Fluorotoluenes	3	UN2388	II	3	T8	150	202	242	5 L	60 L	B	40
	Forbidden materials. See 173.21	Forbidden											
	Formaldehyde, solutions, flammable	3	UN1198	III	3, 8	B1, T8	150	203	242	5 L	60 L	A	40
	Formaldehyde, solutions, *with not less than 25 percent formaldehyde.*	8	UN2209	III	8	T1	154	203	241	5 L	60 L	A	
	Formalin, see Formaldehyde, solutions.												
	Formic acid	8	UN1779	II	8	B2, B28, T8	154	202	242	1 L	30 L	A	40
	Fracturing devices, explosive, *without detonators for oil wells.*	1.1D	UN0099	II	1.1D		None	62	None	Forbidden	Forbidden	B	
	Fuel, aviation, turbine engine	3	UN1863	I	3	T7	150	201	243	1 L	30 L	E	
				II	3	T1	150	202	242	5 L	60 L	B	
				III	3	B1, T1	150	203	242	60 L	220 L	A	
D	Fuel oil *(No. 1, 2, 4, 5, or 6)*	3	NA1993	III	3	B1	150	203	242	60 L	220 L	A	
	Fulminate of mercury (dry)	Forbidden											
	Fulminate of mercury, wet, see Mercury fulminate, *etc.*												
	Fulminating gold	Forbidden											
	Fulminating mercury	Forbidden											
	Fulminating platinum	Forbidden											
	Fulminating silver	Forbidden											

§172.101 HAZARDOUS MATERIALS TABLE—Continued

Symbols	Hazardous materials descriptions and proper shipping names	Hazard class or Division	Identification Numbers	PG	Label Codes	Special provisions	(8) Packaging (§173.***)			(9) Quantity limitations		(10) Vessel stowage	
							Exceptions	Nonbulk	Bulk	Passenger aircraft/rail	Cargo aircraft only	Location	Other
(1)	(2)	(3)	(4)	(5)	(6)	(7)	(8A)	(8B)	(8C)	(9A)	(9B)	(10A)	(10B)
	Fulminic acid	Forbidden											
	Fumaryl chloride	8	UN1780	II	8	B2, T8, T26	154	202	242	1 L	30 L	C	8, 40
	Furaldehydes	6.1	UN1199	II	6.1, 3	T15	None	202	243	5 L	60 L	A	
	Furan	3	UN2389	I	3	T18	None	201	243	1 L	30 L	E	40
	Furfuryl alcohol	6.1	UN2874	III	6.1	T2	153	203	241	60 L	220 L	A	26, 74
	Furfurylamine	3	UN2526	III	3, 8	B1, T1	150	203	242	5 L	60 L	A	40
	Fuse, detonating, *metal clad, see* Cord, detonating, *metal clad.*												
	Fuse, detonating, mild effect, *metal clad, see* Cord, detonating, mild effect, *metal clad.*												
	Fuse, igniter *tubular metal clad*	1.4G	UN0103	II	1.4G		None	62	None	Forbidden	75 kg	A	24E
	Fuse, non-detonating *instantaneous or quickmatch.*	1.3G	UN0101	II	1.3G		None	62	None	Forbidden	Forbidden	B	
	Fuse, safety	1.4S	UN0105	II	1.4S		None	62	None	25 kg	100 kg	A	
D	Fusee (*railway or highway*	4.1	NA1325	II	4.1		None	184	None	15 kg	50 kg	B	
	Fusel oil	3	UN1201	II	3	T1	150	202	242	5 L	60 L	B	
				III	3	B1, T1	150	203	242	60 L	220 L	A	
	Fuses, tracer, see Tracers for ammunition.												
	Fuzes, combination, percussion and time, see Fuzes, detonating *(UN 0257, UN 0367);* Fuzes, igniting (UN 0317, UN 0368).												
	Fuzes, detonating	1.1B	UN0106	II	1.1B		None	62	None	Forbidden	Forbidden	B	2E, 6E
	Fuzes, detonating	1.2B	UN0107	II	1.2B		None	62	None	Forbidden	Forbidden	B	2E, 6E
	Fuzes, detonating	1.4B	UN0257	II	1.4B	116	None	62	None	Forbidden	75 kg	A	24E
	Fuzes, detonating	1.4S	UN0367	II	1.4S	116	None	62	None	25 kg	100 kg	A	
	Fuzes, detonating, *with protective features.*	1.1D	UN0408	II	1.1D		None	62	None	Forbidden	Forbidden	B	
	Fuzes, detonating, *with protective features.*	1.2D	UN0409	II	1.2D		None	62	None	Forbidden	Forbidden	B	
	Fuzes, detonating, *with protective features.*	1.4D	UN0410	II	1.4D	116	None	62	None	Forbidden	75 kg	A	24E
	Fuzes, igniting	1.3G	UN0316	II	1.3G		None	62	None	Forbidden	Forbidden	B	
	Fuzes, igniting	1.4G	UN0317	II	1.4G		None	62	None	Forbidden	75 kg	A	24E
	Fuzes, igniting	1.4S	UN0368	II	1.4S		None	62	None	25 kg	100 kg	A	
	Galactsan trinitrate	Forbidden											
	Gallium	8	UN2803	III	8		None	162	240	20 kg	20 kg	B	48

	Gas cartridges, *(flammable) without a release device, non-re-fillable.*	2.1	UN2037	.....	2.1	.....	306	304	None ..	1 kg	15 kg	B	40
	Gas generator assemblies (aircraft), *containing a non-flammable non-toxic gas and a propellant cartridge.*	2.2			2.2		None	335	None ..	75 kg	150 kg	A	
D	Gas identification set	2.3	NA9035		2.3	6	None	194	None ..	Forbidden	Forbidden	D	
	Gas oil *or* Diesel fuel *or* Heating oil, light.	3	UN1202	III	3	B1, T7, T30	150	203	242	60 L	220 L	A	
	Gas, refrigerated liquid, flammable, n.o.s. *(cryogenic liquid).*	2.1	UN3312	.....	2.1 ..	.....	None	316	318	Forbidden	Forbidden	D	40
	Gas, refrigerated liquid, n.o.s. *(cryogenic liquid).*	2.2	UN3158	.....	2.2 ..	.....	320 ...	316	318	50 kg	500 kg	D	.....
	Gas, refrigerated liquid, oxidizing, n.o.s. *(cryogenic liquid).*	2.2	UN3311	.....	2.2, 5.1.	.....	320 ...	316	318	Forbidden	Forbidden	D	.....
	Gas sample, non-pressurized, flammable, n.o.s., *not refrigerated liquid.*	2.1	UN3167		2.1		306	302, 304.	None ..	1 L	5 L	D	
	Gas sample, non-pressurized, toxic, flammable, n.o.s., *not refrigerated liquid.*	2.3	UN3168		2.3, 2.1.		306	302	None ..	Forbidden	1 L	D	
	Gas sample, non-pressurized, toxic, n.o.s., *not refrigerated liquid.*	2.3	UN3169		2.3		306	302, 304.	None ..	Forbidden	1 L	D	
D	Gasohol *gasoline mixed with ethyl alcohol, with not more than 20 percent alcohol.*	3	NA1203	II	3		150	202	242	5 L	60 L	E	
	Gasoline	3	UN1203	II	3	B33, B101, T8	150	202	242	5 L	60 L	E	
	Gasoline, casinghead, see Gasoline	.....			.....		.....	.....	.....	.....	.....		
	Gelatine, blasting, see Explosive, blasting, type A.	.....			.....		.....	.....	.....	.....	.....		
	Gelatine dynamites, see Explosive, blasting, type A.	.....			.....		.....	.....	.....	.....	.....		
	Germane	2.3	UN2192		2.3, 2.1.	2	None	192	245	Forbidden	Forbidden	D	40
	Glycerol-1,3-dinitrate	Forbidden			.....		.....	.....	.....	.....	.....		
	Glycerol gluconate trinitrate	Forbidden			.....		.....	.....	.....	.....	.....		
	Glycerol lactate trinitrate	Forbidden			.....		.....	.....	.....	.....	.....		
	Glycerol alpha-monochlorohydrin	6.1	UN2689	III	6.1	T2	153	203	241	60 L	220 L	A	
	Glyceryl trinitrate, see Nitroglycerin, *etc.*	.....			.....		.....	.....	.....	.....	.....		
	Glycidaldehyde	3	UN2622	II	3, 6.1	T8	150	202	243	1 L	60 L	A	40
D	Grenades, empty primed	1.4S	NA0349	II	None ..		None	62	None ..	25 kg	100 kg	A	
	Grenades, *hand or rifle, with bursting charge.*	1.1D	UN0284	II	1.1D ...		.....	62	None ..	Forbidden	Forbidden	B	
	Grenades, *hand or rifle, with bursting charge.*	1.2D	UN0285	II	1.2D ...		.....	62	None ..	Forbidden	Forbidden	B	
	Grenades, *hand or rifle, with bursting charge.*	1.1F	UN0292	II	1.1F ...		.....	62	None ..	Forbidden	Forbidden	E	
	Grenades, *hand or rifle, with bursting charge.*	1.2F	UN0293	II	1.2F ...		.....	62	None ..	Forbidden	Forbidden	E	

§172.101 HAZARDOUS MATERIALS TABLE—Continued

Symbols	Hazardous materials descriptions and proper shipping names	Hazard class or Division	Identification Numbers	PG	Label Codes	Special provisions	(8) Packaging (§173.***)			(9) Quantity limitations		(10) Vessel stowage	
							Exceptions	Nonbulk	Bulk	Passenger aircraft/rail	Cargo aircraft only	Location	Other
(1)	(2)	(3)	(4)	(5)	(6)	(7)	(8A)	(8B)	(8C)	(9A)	(9B)	(10A)	(10B)
	Grenades, illuminating, see Ammunition, illuminating, *etc.*	.....			.....		.....	.....	.....	.....	.....		
	Grenades, practice, *hand or rifle*	1.4S	UN0110	II	1.4S ...		.....	62	None ..	25 kg	100 kg	A	
	Grenades, practice, *hand or rifle*	1.3G	UN0318	II	1.3G ...		.....	62	None ..	Forbidden	Forbidden	B	
	Grenades, practice, *hand or rifle*	1.2G	UN0372	II	1.2G ...		.....	62	None ..	Forbidden	Forbidden	B	
	Grenades practice *Hand or rifle*	1.4G	UN0452	II	1.4G ...		.....	62	None ..	Forbidden	75 kg	A	24E
	Grenades, smoke, see Ammunition, smoke, *etc.*	.....			.....		.....	.....	.....	.....	.....		
	Guanidine nitrate	5.1	UN1467	III	5.1	A1	152	213	240	25 kg	100 kg	A	73
	Guanyl nitrosaminoguanylidene hydrazine (dry).	Forbidden			.....		.....	.....	.....	.....	.....		
	Guanyl nitrosaminoguanylidene hydrazine, wetted *with not less than 30 percent water, by mass.*	1.1A	UN0113	II	1.1A ...	111, 117	None	62	None ..	Forbidden	Forbidden	E	2E, 6E
	Guanyl nitrosaminoguanyltetrazene (dry).	Forbidden			.....		.....	.....	.....	.....	.....		
	Guanyl nitrosaminoguanyltetrazene, wetted *or* Tetrazene, wetted *with not less than 30 percent water or mixture of alcohol and water, by mass.*	1.1A	UN0114	II	1.1A ...	111, 117	None	62	None ..	Forbidden	Forbidden	E	2E, 6E
	Gunpowder, compressed *or* Gunpowder in pellets, *see* Black powder *(UN 0028).*	.....			.....		.....	.....	.....	.....	.....		
	Gunpowder, *granular or as a meal, see* Black powder *(UN 0027).*	.....			.....		.....	.....	.....	.....	.....		
	Hafnium powder, dry	4.2	UN2545	I	4.2	B100	None	211	242	Forbidden	Forbidden	D	
	.....	.....		II	4.2	A19, A20, B101, B106, N34	None	212	241	15 kg	50 kg	D	
	.....	.....		III	4.2	B100	None	213	241	25 kg	100 kg	D	
	Hafnium powder, wetted *with not less than 25 percent water (a visible excess of water must be present) (a) mechanically produced, particle size less than 53 microns; (b) chemically produced, particle size less than 840 microns.*	4.1	UN1326	II	4.1	A6, A19, A20, N34	None	212	241	15 kg	50 kg	E	
	Hand signal device, see Signal devices, hand.	.....			.....		.....	.....	.....	.....	.....		

	Hazardous substances, liquid or solid, n.o.s., see Environmentally hazardous substances, *etc.*	.....			.....		.....	.....	.....	.....	.....		
D	Hazardous waste, liquid, n.o.s	9	NA3082	III	9		155	203	241	No limit	No limit	A	
D	Hazardous waste, solid, n.o.s	9	NA3077	III	9	B54	155	213	240	No limit	No limit	A	
	Helium, compressed	2.2	UN1046		2.2		306	302	302, 314.	75 kg	150 kg	A	85
	Helium-oxygen mixture, see Rare gases and oxygen mixtures.	.....			.....		.....	.....	.....	.....	.....		
	Helium, refrigerated liquid *(cryogenic liquid).*	2.2	UN1963		2.2		320	316	318	50 kg	500 kg	B	
	Heptafluoropropane *or* Refrigerant gas R 227.	2.2	UN3296		2.2		306	304	314, 315.	75 kg	150 kg	A	
	n-Heptaldehyde	3	UN3056	III	3	B1, T1	150	203	242	60 L	220 L	A	
	Heptanes	3	UN1206	II	3	T2	150	202	242	5 L	60 L	B	
	n-Heptene	3	UN2278	II	3	B101, T8	150	202	242	5 L	60 L	B	
	Hexachloroacetone	6.1	UN2661	III	6.1	T8	153	203	241	60 L	220 L	B	12, 40
	Hexachlorobenzene	6.1	UN2729	III	6.1		153	203	241	60 L	220 L	A	
	Hexachlorobutadiene	6.1	UN2279	III	6.1	T7	153	203	241	60 L	220 L	A	
	Hexachlorocyclopentadiene	6.1	UN2646	I	6.1	2, B9, B14, B32, B74, B77, T38, T43, T45	None	227	244	Forbidden	Forbidden	D	40
	Hexachlorophene	6.1	UN2875	III	6.1		153	213	240	100 kg	200 kg	A	
	Hexadecyltrichlorosilane	8	UN1781	II	8	A7, B2, B6, N34, T8	None	202	242	Forbidden	30 L	C	40
	Hexadienes	3	UN2458	II	3	B101, T7	None	202	242	5 L	60 L	B	
	Hexaethyl tetraphosphate and compressed gas mixtures.	2.3	UN1612		2.3	3	None	334	None	Forbidden	Forbidden	D	40
	Hexaethyl tetraphosphate *liquid*	6.1	UN1611	II	6.1	N76	None	202	243	5 L	60 L	E	40
	Hexaethyl tetraphosphate, *solid*	6.1	UN1611	II	6.1	N76	None	212	242	25 kg	100 kg	E	40
	Hexafluoroacetone	2.3	UN2420		2.3, 8	2, B9, B14	None	304	314, 315.	Forbidden	Forbidden	D	40
	Hexafluoroacetone hydrate	6.1	UN2552	II	6.1	T14	None	202	243	5 L	60 L	B	40
	Hexafluoroethane, compressed *or* Refrigerant gas R 116.	2.2	UN2193		2.2		306	304	314, 315.	75 kg	150 kg	A	
	Hexafluorophosphoric acid	8	UN1782	II	8	A6, A7, B2, N3, N34, T9, T27	None	202	242	1 L	30 L	A	
D	Hexafluoropropylene oxide	2.2	NA1956		2.2		306	304	314, 315.	75 kg	150 kg	A	
	Hexafluoropropylene compressed *or* Refrigerant gas R 1216.	2.2	UN1858		2.2		306	304	314, 315.	75 kg	150 kg	A	
	Hexaldehyde	3	UN1207	III	3	B1, T1	150	203	242	60 L	220 L	A	
	Hexamethylene diisocyanate	6.1	UN2281	II	6.1	B101, T14	None	202	243	5 L	60 L	B	13, 40
	Hexamethylene triperoxide diamine (dry).	Forbidden			.....		.....	.....	.....	.....	.....		
	Hexamethylenediamine, solid	8	UN2280	III	8		154	213	240	25 kg	100 kg	A	12
	Hexamethylenediamine solution	8	UN1783	II	8	T8	None	202	242	1 L	30 L	A	
	.....	.....		III	8	T7	154	203	241	5 L	60 L	A	
	Hexamethyleneimine	3	UN2493	II	3, 8	B101, T8	None	202	243	1 L	5 L	B	40
	Hexamethylenetetramine	4.1	UN1328	III	4.1	A1	151	213	240	25 kg	100 kg	A	

§172.101 HAZARDOUS MATERIALS TABLE—Continued

Symbols	Hazardous materials descriptions and proper shipping names	Hazard class or Division	Identification Numbers	PG	Label Codes	Special provisions	(8) Packaging (§173.***)			(9) Quantity limitations		(10) Vessel stowage	
							Exceptions	Nonbulk	Bulk	Passenger aircraft/rail	Cargo aircraft only	Location	Other
(1)	(2)	(3)	(4)	(5)	(6)	(7)	(8A)	(8B)	(8C)	(9A)	(9B)	(10A)	(10B)
	Hexamethylol benzene hexanitrate	Forbidden											
	Hexanes	3	UN1208	II	3	B101, T8	150	202	242	5 L	60 L	E	
	2,2',4,4',6,6'- Hexanitro-3,3'-dihydroxyazobenzene(dry).	Forbidden											
	Hexanitroazoxy benzene	Forbidden											
	N,N'-(hexanitrodiphenyl) ethylene dinitramine (dry).	Forbidden											
	Hexanitrodiphenyl urea	Forbidden											
	2,2',3',4,4',6-Hexanitrodiphenylamine	Forbidden											
	Hexanitrodiphenylamine *or* Dipicrylamine *or* Hexyl.	1.1D	UN0079	II	1.1D		None	62	None	Forbidden	Forbidden	B	1E, 5E
	2,3',4,4',6,6'-Hexanitrodiphenylether	Forbidden											
	Hexanitroethane	Forbidden											
	Hexanitrooxanilide	Forbidden											
	Hexanitrostilbene	1.1D	UN0392	II	1.1D		None	62	None	Forbidden	Forbidden	B	1E, 5E
	Hexanoic acid, see Corrosive liquids, n.o.s.												
	Hexanols	3	UN2282	III	3	B1, T1	150	203	242	60 L	220 L	A	
	1-Hexene	3	UN2370	II	3	B101, T8	150	202	242	5 L	60 L	E	
	Hexogen and cyclotetramethylenetetranitramine mixtures, wetted *or* desensitized *see* RDX and HMX mixtures, wetted *or* desensitized *etc.*												
	Hexogen and HMX mixtures, wetted *or* desensitized *see* RDX and HMX mixtures, wetted *or* desensitized *etc.*												
	Hexogen and octogen mixtures, wetted *or* desensitized *see* RDX and HMX mixtures, wetted *or* desensitized *etc.*												
	Hexogen, *see* Cyclotrimethylenetrinitramine, *etc.*												
	Hexolite, *or* Hexotol *dry or wetted with less than 15 percent water, by mass.*	1.1D	UN0118	II	1.1D		None	62	None	Forbidden	Forbidden	B	1E, 5E
	Hexotonal	1.1D	UN0393	II	1.1D		None	62	None	Forbidden	Forbidden	B	1E, 5E
	Hexyl, *see* Hexanitrodiphenylamine												

Hexyltrichlorosilane	8	UN1784	II	8	A7, B2, B6, N34, T8, T26	None	202	242	Forbidden	30 L	C	40
High explosives, see individual explosives' entries.												
HMX, *see* Cyclotetramethylenetetranitramine, *etc.*												
Hydrazine, anhydrous *or* Hydrazine aqueous solutions *with more than 64 percent hydrazine, by mass.*	8	UN2029	I	8, 3, 6.1.	A3, A6, A7, A10, B16, B53, T25	None	201	243	Forbidden	2.5 L	D	21, 40, 42, 100
Hydrazine, aqueous solution *with not more than 37 percent hydrazine, by mass.*	6.1	UN3293	III	6.1	T7	153	203	241	60 L	220 L	A	
Hydrazine azide	Forbidden											
Hydrazine chlorate	Forbidden											
Hydrazine dicarbonic acid diazide	Forbidden											
Hydrazine hydrate *or* Hydrazine aqueous solutions, *with not less than 37 percent but not more than 64 percent hydrazine, by mass.*	8	UN2030	II	8, 6.1	B16, B53, B110, T15	None	202	243	Forbidden	30 L	D	40, 42, 82
Hydrazine perchlorate	Forbidden											
Hydrazine selenate	Forbidden											
Hydriodic acid, anhydrous, see Hydrogen iodide, anhydrous.												
Hydriodic acid	8	UN1787	II	8	A3, A6, B2, N41, T9, T27	154	202	242	1 L	30 L	C	
			III	8	T8, T26	154	203	241	5 L	60 L	C	8
Hydrobromic acid, anhydrous, see Hydrogen bromide, anhydrous.												
Hydrobromic acid, *with more than 49 percent hydrobromic acid.*	8	UN1788	II	8	B2, B15, N41, T9, T27	154	202	242	Forbidden	Forbidden	C	
			III	8	T8, T26	154	203	241	Forbidden	Forbidden	C	8
Hydrobromic acid, *with not more than 49 percent hydrobromic acid.*	8	UN1788	II	8	A3, A6, B2, B15, N41, T9, T27	154	202	242	1 L	30 L	C	
			III	8	T8, T26	154	203	241	5 L	30 L	C	8
Hydrocarbon gases, compressed, n.o.s..	2.1	UN1964		2.1		306	302	314, 315.	Forbidden	150 kg	E	40
Hydrocarbon gases, liquefied, n.o.s.	2.1	UN1965		2.1		306	304	314, 315.	Forbidden	150 kg	E	40
Hydrocarbons, liquid, n.o.s	3	UN3295	I	3	T8, T31	150	201	243	1 L	30 L	E	
			II	3	T8, T31	150	202	242	5 L	60 L	B	
			III	3	B1, T7, T30	150	203	242	60 L	220 L	A	
Hydrochloric acid, anhydrous, see Hydrogen chloride, anhydrous.												
Hydrochloric acid	8	UN1789	II	8	A3, A6, B3, B15, N41, T9, T27	154	202	242	1 L	30 L	C	
			III	8	T8, T26	154	203	241	5 L	60 L	C	8
Hydrocyanic acid, anhydrous, see Hydrogen cyanide *etc.*												

§172.101 HAZARDOUS MATERIALS TABLE—Continued

Symbols	Hazardous materials descriptions and proper shipping names	Hazard class or Division	Identification Numbers	PG	Label Codes	Special provisions	(8) Packaging (§173.***)			(9) Quantity limitations		(10) Vessel stowage	
							Exceptions	Nonbulk	Bulk	Passenger aircraft/rail	Cargo aircraft only	Location	Other
(1)	(2)	(3)	(4)	(5)	(6)	(7)	(8A)	(8B)	(8C)	(9A)	(9B)	(10A)	(10B)
	Hydrocyanic acid, aqueous solutions *or* Hydrogen cyanide, aqueous solutions *with not more than 20 percent hydrogen cyanide.*	6.1	UN1613	I	6.1	2, B61, B65, B77, B82	None	195	244	Forbidden	Forbidden	D	40
D	Hydrocyanic acid, aqueous solutions *with less than 5 percent hydrogen cyanide.*	6.1	NA1613	II	6.1	T18, T26	None	195	243	Forbidden	5 L	D	40
	Hydrocyanic acid, liquefied, see Hydrogen cyanide, *etc.*												
	Hydrocyanic acid (prussic), unstabilized.	Forbidden											
	Hydrofluoric acid and Sulfuric acid mixtures.	8	UN1786	I	8, 6.1	A6, A7, B15, B23, N5, N34, T18, T27	None	201	243	Forbidden	2.5 L	D	40, 95
	Hydrofluoric acid, anhydrous, see Hydrogen fluoride, anhydrous.												
	Hydrofluoric acid, *with more than 60 percent strength.*	8	UN1790	I	8, 6.1	A6, A7, B4, B15, B23, N5, N34, T18, T27	None	201	243	0.5 L	2.5 L	D	12, 40
	Hydrofluoric acid, *with not more than 60 percent strength.*	8	UN1790	II	8, 6.1	A6, A7, B15, B110, N5, N34, T18, T27	None	202	243	1 L	30 L	D	12, 40
	Hydrofluoroboric acid, see Fluoroboric acid.												
	Hydrofluorosilicic acid, see Fluorosilicic acid.												
	Hydrogen and Methane mixtures, compressed.	2.1	UN2034		2.1		306	302	302, 314, 315.	Forbidden	150 kg	E	40
	Hydrogen bromide, anhydrous	2.3	UN1048		2.3, 8	3, B14	None	304	314, 315.	Forbidden	25 kg	D	40
	Hydrogen chloride, anhydrous	2.3	UN1050		2.3, 8	3	None	304	None	Forbidden	Forbidden	D	40
	Hydrogen chloride, refrigerated liquid	2.3	UN2186		2.3, 8	3, B6	None	None	314, 315.	Forbidden	Forbidden	B	40
	Hydrogen, compressed	2.1	UN1049		2.1		306	302	302, 314.	Forbidden	150 kg	E	40, 57
	Hydrogen cyanide, solution in alcohol *with not more than 45 percent hydrogen cyanide.*	6.1	UN3294	I	6.1, 3	2,25,B9, B14, B32, B74, T38, T43,T45	None	227	244	Forbidden	Forbidden	D	40

Hydrogen cyanide, stabilized *with less than 3 percent water.*	6.1	UN1051	I	6.1, 3	1, B35, B61, B65, B77, B82	None	195	244	Forbidden	Forbidden	D	40
Hydrogen cyanide, stabilized, *with less than 3 percent water and absorbed in a porous inert material.*	6.1	UN1614	I	6.1	5	None	195	None ..	Forbidden	Forbidden	D	25, 40
Hydrogen fluoride, anhydrous	8	UN1052	I	8, 6.1	3, B7, B46, B71, B77, T24, T27	None	163	243	Forbidden	Forbidden	D	40
Hydrogen iodide, anhydrous	2.3	UN2197		2.3	3, B14	None	304	314, 315.	Forbidden	Forbidden	D	40
Hydrogen iodide solution, see Hydriodic acid, solution.	.....			.....		.....	.....	.....	.....	.....		
Hydrogen peroxide and peroxyacetic acid mixtures, stabilized *with acids, water and not more than 5 percent peroxyacetic acid.*	5.1	UN3149	II	5.1, 8	A2, A3, A6, B53, B104, B110, T14	None	202	243	1 L	5 L	D	25, 66, 75, 106
Hydrogen peroxide, aqueous solutions *with more than 40 percent but not more than 60 percent hydrogen peroxide (stabilized as necessary).*	5.1	UN2014	II	5.1, 8	12, A3, A6, B53, B80, B81, B85, B104, B110, T14, T37	None	202	243	Forbidden	Forbidden	D	25, 66, 75, 106
Hydrogen peroxide, aqueous solutions *with not less than 8 percent but less than 20 percent hydrogen peroxide (stabilized as necessary).*	5.1	UN2984	III	5.1	17, A1, B104, T8, T37	152	203	241	2.5 L	30 L	B	25, 75, 106
Hydrogen peroxide, aqueous solutions *with not less than 20 percent but not more than 40 percent hydrogen peroxide (stabilized as necessary).*	5.1	UN2014	II	5.1, 8	A2, A3, A6, B53, B104, B110, T14, T37	None	202	243	1 L	5 L	D	25, 66, 75, 106
Hydrogen peroxide, stabilized *or* Hydrogen peroxide aqueous solutions, stabilized *with more than 60 percent hydrogen peroxide.*	5.1	UN2015	I	5.1, 8	12, A3, A6, B53, B80, B81, B85, T15, T37	None	201	243	Forbidden	Forbidden	D	25, 66, 75, 106
Hydrogen, refrigerated liquid *(cryogenic liquid).*	2.1	UN1966		2.1		None	316	318, 319.	Forbidden	Forbidden	D	40
Hydrogen selenide, anhydrous	2.3	UN2202		2.3, 2.1.	1	None	192	245	Forbidden	Forbidden	D	40
Hydrogen sulfate, see Sulfuric acid ..	.....			.....		.....	.....	.....	.....	.....		
Hydrogen sulfide	2.3	UN1053		2.3, 2.1.	2, B9, B14	None	304	314, 315.	Forbidden	Forbidden	D	40
Hydrogendifluorides, n.o.s. *solid*	8	UN1740	II	8	N3, N34	None	212	240	15 kg	50 kg	A	25, 26, 40
.....	.....		III	8	N3, N34	154	213	240	25 kg	100 kg	A	25, 26, 40
Hydrogendifluorides, n.o.s. *solutions*	8	UN1740	II	8	N3, N34	None	202	242	1 L	30 L	A	25, 26, 40
.....	.....		III	8	N3, N34	154	203	241	5 L	60 L	A	25, 26, 40
Hydroquinone	6.1	UN2662	III	6.1		153	213	240	100 kg	200 kg	A	
Hydrosilicofluoric acid, see Fluorosilicic acid.	.....			.....		.....	.....	.....	.....	.....		

§172.101 HAZARDOUS MATERIALS TABLE—Continued

Symbols	Hazardous materials descriptions and proper shipping names	Hazard class or Division	Identification Numbers	PG	Label Codes	Special provisions	(8) Packaging (§173.***)			(9) Quantity limitations		(10) Vessel stowage	
							Exceptions	Nonbulk	Bulk	Passenger aircraft/rail	Cargo aircraft only	Location	Other
(1)	(2)	(3)	(4)	(5)	(6)	(7)	(8A)	(8B)	(8C)	(9A)	(9B)	(10A)	(10B)
	Hydroxyl amine iodide	Forbidden											
	Hydroxylamine sulfate	8	UN2865	III	8		154	213	240	25 kg	100 kg	A	
	Hypochlorite solutions	8	UN1791	II	8	A7, B2, B15, N34, T7	154	202	242	1 L	30 L	B	26
				III	8	B104, N34, T7	154	203	241	5 L	60 L	B	26
	Hypochlorites, inorganic, n.o.s	5.1	UN3212	II	5.1		152	212	240	5 kg	25 kg	D	48, 56, 58, 69, 106, 116, 118
	Hyponitrous acid	Forbidden											
	Igniter fuse, metal clad, see Fuse, igniter, tubular, metal clad.												
	Igniters	1.1G	UN0121	II	1.1G		None	62	None	Forbidden	Forbidden	B	
	Igniters	1.2G	UN0314	II	1.2G		None	62	None	Forbidden	Forbidden	B	
	Igniters	1.3G	UN0315	II	1.3G		None	62	None	Forbidden	Forbidden	A	
	Igniters	1.4G	UN0325	II	1.4G		None	62	None	Forbidden	75 kg	A	24E
	Igniters	1.4S	UN0454	II	1.4S		None	62	None	25 kg	100 kg	A	
	3,3'-Iminodipropylamine	8	UN2269	III	8	T8	154	203	241	5 L	60 L	A	
	Infectious substances, affecting animals *only.*	6.2	UN2900		6.2		134	196	None	50 mL or 50 g	4 L or 4 kg	B	
	Infectious substances, affecting humans.	6.2	UN2814		6.2		134	196	None	50 mL or 50 g	4 L or 4 kg	B	
	Inflammable, see Flammable												
	Initiating explosives (dry)	Forbidden											
	Inositol hexanitrate (dry)	Forbidden											
D	Insecticide gases *flammable* n.o.s	2.1	NA1954		2.1		306	304	314, 315.	75 kg	150 kg	D	
	Insecticide gases, n.o.s	2.2	UN1968		2.2		306	304	314, 315.	75 kg	150 kg	A	
	Insecticide gases, toxic, n.o.s	2.3	UN1967		2.3	3	None	193, 334.	245	Forbidden	Forbidden	D	40
	Inulin trinitrate (dry)	Forbidden											
	Iodine azide (dry)	Forbidden											
	Iodine monochloride	8	UN1792	II	8	B6, N41, T8, T26	None	212	240	Forbidden	50 kg	D	40, 66, 74, 89, 90

	Iodine pentafluoride	5.1	UN2495	I	5.1, 6.1, 8.		None	205	243	Forbidden	2.5 L	D	25, 40, 66, 90
	2-Iodobutane	3	UN2390	II	3	T8	150	202	242	5 L	60 L	B	
	Iodomethylpropanes	3	UN2391	II	3	T8	150	202	242	5 L	60 L	B	
	Iodopropanes	3	UN2392	III	3	B1, T8	150	203	242	60 L	220 L	A	
	Iodoxy compounds (dry)	Forbidden											
	Iridium nitratopentamine iridium nitrate.	Forbidden											
	Iron chloride, see Ferric chloride												
	Iron oxide, spent, *or* Iron sponge, spent *obtained from coal gas purification.*	4.2	UN1376	III	4.2	B18	None	213	240	Forbidden	Forbidden	E	
	Iron pentacarbonyl	6.1	UN1994	I	6.1, 3	1, B9, B14, B30, B72, B77, T38, T43, T44	None	192	244	Forbidden	Forbidden	D	40
	Iron sesquichloride, see Ferric chloride.												
	Irritating material, see Tear gas substances, *etc.*												
	Isobutane *see also* Petroleum gases, liquefied.	2.1	UN1969		2.1	19	306	304	314, 315.	Forbidden	150 kg	E	40
	Isobutanol *or* Isobutyl alcohol	3	UN1212	III	3	B1, T1	150	203	242	60 L	220 L	A	
	Isobutyl acetate	3	UN1213	II	3	T1	150	202	242	5 L	60 L	B	
	Isobutyl acrylate, inhibited	3	UN2527	III	3	B1, T1	150	203	242	60 L	220 L	A	
	Isobutyl alcohol, *see* Isobutanol												
	Isobutyl aldehyde, *see* Isobutyraldehyde.												
D	Isobutyl chloroformate	6.1	NA2742	I	6.1, 3, 8.	2, B9, B14, B32, B74, T38, T43, T45	None	227	244	1 L	30 L	A	12, 13, 22, 25, 40, 48, 100
	Isobutyl formate	3	UN2393	II	3	T1	150	202	242	5 L	60 L	B	
	Isobutyl isobutyrate	3	UN2528	III	3	B1, T1	150	203	242	60 L	220 L	A	
+	Isobutyl isocyanate	3	UN2486	II	3, 6.1	1, B9, B14, B30, B72, T38, T43, T44	None	226	244	1 L	Forbidden	D	40
	Isobutyl methacrylate, inhibited	3	UN2283	III	3	B1, T1	150	203	242	60 L	220 L	A	
	Isobutyl propionate	3	UN2394	III	3	B1, T1	150	203	242	60 L	220 L	B	
	Isobutylamine	3	UN1214	II	3, 8	B101, T8	None	202	243	1 L	5 L	B	40
	Isobutylene *see also* Petroleum gases, liquefied.	2.1	UN1055		2.1	19	306	304	314, 315.	Forbidden	150 kg	E	40
	Isobutyraldehyde *or* Isobutyl aldehyde.	3	UN2045	II	3	T8	150	202	242	5 L	60 L	E	40
	Isobutyric acid	3	UN2529	III	3, 8	B1, T1	150	203	242	5 L	60 L	A	
	Isobutyric anhydride	3	UN2530	III	3, 8	B1, T1	150	203	242	5 L	60 L	A	
	Isobutyronitrile	3	UN2284	II	3, 6.1	T17	None	202	243	1 L	60 L	E	40
	Isobutyryl chloride	3	UN2395	II	3, 8	B100, T9, T26	None	202	243	1 L	5 L	C	40

§172.101 HAZARDOUS MATERIALS TABLE—Continued

Symbols	Hazardous materials descriptions and proper shipping names	Hazard class or Division	Identification Numbers	PG	Label Codes	Special provisions	(8) Packaging (§173.***)			(9) Quantity limitations		(10) Vessel stowage	
							Exceptions	Nonbulk	Bulk	Passenger aircraft/rail	Cargo aircraft only	Location	Other
(1)	(2)	(3)	(4)	(5)	(6)	(7)	(8A)	(8B)	(8C)	(9A)	(9B)	(10A)	(10B)
	Isocyanates, flammable, toxic, n.o.s *or* Isocyanate solutions, flammable, toxic, n.o.s. *flashpoint less than 23 degrees C.*	3	UN2478	II	3, 6.1	5, A3, A7, T15	None	202	243	1 L	60 L	D	40
	Isocyanates, toxic, flammable, n.o.s. *or* Isocyanate solutions, toxic, flammable, n.o.s., *flash point not less than 23 degrees C but not more than 61 degrees C and boiling point less than 300 degrees C.*	6.1	UN3080	II	6.1, 3	T15	None	202	243	5 L	60 L	D	25, 40, 48
	Isocyanates, toxic, n.o.s. *or* Isocyanate, solutions, toxic, n.o.s., *flash point more than 61 degrees C and boiling point less than 300 degrees C.*	6.1	UN2206	II	6.1	T15	None	202	243	5 L	60 L	D	25, 40, 48
	.....	.....		III	6.1	T8	153	203	241	60 L	220 L	D	25, 40, 48
	Isocyanatobenzotrifluorides	6.1	UN2285	II	6.1, 3	5, B101, T14	None	202	243	5 L	60 L	B	25, 40, 48
	Isoheptenes	3	UN2287	II	3	T7	150	202	242	5 L	60 L	B	
	Isohexenes	3	UN2288	II	3	T7	150	202	242	5 L	60 L	E	
	Isooctane, see Octanes	.....											
	Isooctenes	3	UN1216	II	3	T8	150	202	242	5 L	60 L	B	
	Isopentane, see Pentane	.....											
	Isopentanoic acid, see Corrosive liquids, n.o.s.	.....											
	Isopentenes	3	UN2371	I	3	T20	150	201	243	1 L	30 L	E	
	Isophorone diisocyanate	6.1	UN2290	III	6.1	T7	153	203	241	60 L	220 L	B	40
	Isophoronediamine	8	UN2289	III	8	T8	154	203	241	5 L	60 L	A	
	Isoprene, inhibited	3	UN1218	I	3	T20	150	201	243	1 L	30 L	E	
	Isopropanol *or* Isopropyl alcohol	3	UN1219	II	3	T1	150	202	242	5 L	60 L	B	
	Isopropenyl acetate	3	UN2403	II	3	T1	150	202	242	5 L	60 L	B	
	Isopropenylbenzene	3	UN2303	III	3	B1, T1	150	203	242	60 L	220 L	A	
	Isopropyl acetate	3	UN1220	II	3	T1	150	202	242	5 L	60 L	B	
	Isopropyl acid phosphate	8	UN1793	III	8	T7	154	213	240	25 kg	100 kg	A	
	Isopropyl alcohol, *see* Isopropanol	.....											
	Isopropyl butyrate	3	UN2405	III	3	B1, T1	150	203	242	60 L	220 L	A	
	Isopropyl chloroacetate	3	UN2947	III	3	B1, T1	150	203	242	60 L	220 L	A	

	Isopropyl chloroformate	6.1	UN2407	I	6.1, 3, 8.	2, B9, B14, B32, B74, B77, T38, T43, T45	None	227	244	Forbidden	Forbidden	B	40
	Isopropyl 2-chloropropionate	3	UN2934	III	3	B1, T1	150	203	242	60 L	220 L	A	
	Isopropyl isobutyrate	3	UN2406	II	3	T1	150	202	242	5 L	60 L	B	
+	Isopropyl isocyanate	3	UN2483	I	3, 6.1	1, B9, B14, B30, B72, T38, T43, T44	None	226	244	Forbidden	Forbidden	D	40
	Isopropyl mercaptan, see Propanethiols.												
	Isopropyl nitrate	3	UN1222	II	3	T25	150	202	None	5 L	60 L	D	
	Isopropyl phosphoric acid, see Isopropyl acid phosphate.												
	Isopropyl propionate	3	UN2409	II	3	T1	150	202	242	5 L	60 L	B	
	Isopropylamine	3	UN1221	I	3, 8	T20	None	201	243	0.5 L	2.5 L	E	
	Isopropylbenzene	3	UN1918	III	3	B1, T1	150	203	242	60 L	220 L	A	
	Isopropylcumyl hydroperoxide, with more than 72 percent in solution.	Forbidden											
	Isosorbide dinitrate mixture *with not less than 60 percent lactose, mannose, starch or calcium hydrogen phosphate.*	4.1	UN2907	II	4.1		None	212	None	15 kg	50 kg	E	
	Isosorbide-5-mononitrate	4.1	UN3251	III	4.1	66	151	213	240	Forbidden	Forbidden	D	12
	Isothiocyanic acid	Forbidden											
	Jet fuel, see Fuel aviation, turbine engine.												
D	Jet perforating guns, charged oil well, with detonator.	1.1D	NA0124	II	1.1D	55, 56	None	62	None	Forbidden	Forbidden	A	24E
D	Jet perforating guns, charged oil well, with detonator.	1.4D	NA0494	II	1.4D	55, 56	None	62	None	Forbidden	Forbidden	B	
	Jet perforating guns, charged *oil well, without detonator.*	1.1D	UN0124	II	1.1D	55	None	62	None	Forbidden	Forbidden	B	
	Jet perforating guns, charged, *oil well, without detonator.*	1.4D	UN0494	II	1.4D	55, 114	None	62	None	Forbidden	300 kg	A	24E
	Jet perforators, see Charges, shaped, commercial *etc.*												
	Jet tappers, without detonator, see Charges, shaped commercial, *etc.*												
	Jet thrust igniters, for rocket motors or Jato, see Igniters.												
	Jet thrust unit (Jato), see Rocket motors.												
	Kerosene	3	UN1223	III	3	B1, T1	150	203	242	60 L	220 L	A	
	Ketones, liquid, n.o.s	3	UN1224	I	3	T8, T31	None	201	243	1 L	30 L	E	
				II	3	T8, T31	150	202	242	5 L	60 L	B	
				III	3	B1, T7, T30	150	203	242	60 L	220 L	A	
	Krypton, compressed	2.2	UN1056		2.2		306	302	None	75 kg	150 kg	A	
	Krypton, refrigerated liquid *(cryogenic liquid).*	2.2	UN1970		2.2		320	None	None	50 kg	500 kg	B	

§172.101 HAZARDOUS MATERIALS TABLE—Continued

Symbols	Hazardous materials descriptions and proper shipping names	Hazard class or Division	Identification Numbers	PG	Label Codes	Special provisions	(8) Packaging (§173.***) Exceptions	Non-bulk	Bulk	(9) Quantity limitations Passenger aircraft/rail	Cargo aircraft only	(10) Vessel stowage Location	Other
(1)	(2)	(3)	(4)	(5)	(6)	(7)	(8A)	(8B)	(8C)	(9A)	(9B)	(10A)	(10B)
	Lacquer base or lacquer chips, nitrocellulose, dry, see Nitrocellulose, *etc. (UN 2557).*	.....			.....		.....	.....	.....	.....	.....		
	Lacquer base or lacquer chips, plastic, wet with alcohol or solvent, see Nitrocellulose *(UN 2059, UN 2060, UN 2555, UN2556) or* Paint *etc. (UN1263).*	.....			.....		.....	.....	.....	.....	.....		
	Lead acetate	6.1	UN1616	III	6.1		153	213	240	100 kg	200 kg	A	
	Lead arsenates	6.1	UN1617	II	6.1		None	212	242	25 kg	100 kg	A	
	Lead arsenites	6.1	UN1618	II	6.1		None	212	242	25 kg	100 kg	A	
	Lead azide (dry)	Forbidden			.....		.....	.....	.....	.....	.....		
	Lead azide, wetted *with not less than 20 percent water or mixture of alcohol and water, by mass.*	1.1A	UN0129	II	1.1A	111, 117	None	62	None	Forbidden	Forbidden	E	2E, 6E
	Lead compounds, soluble, n.o.s	6.1	UN2291	III	6.1		153	213	240	100 kg	200 kg	A	
	Lead cyanide	6.1	UN1620	II	6.1		None	212	242	25 kg	100 kg	A	26
	Lead dioxide	5.1	UN1872	III	5.1	A1	152	213	240	25 kg	100 kg	A	34
	Lead dross, see Lead sulfate, *with more than 3 percent free acid.*	.....			.....		.....	.....	.....	.....	.....		
D	Lead mononitroresorcinate	1.1A	NA0473	II	1.1A	111, 117	None	62	None	Forbidden	Forbidden	E	2E, 6E
	Lead nitrate	5.1	UN1469	II	5.1, 6.1.		None	212	242	5 kg	25 kg	A	
	Lead nitroresorcinate (dry)	Forbidden			.....		.....	.....	.....	.....	.....		
	Lead perchlorate, solid	5.1	UN1470	II	5.1, 6.1.	T8	None	212	242	5 kg	25 kg	A	56, 58, 106
	Lead perchlorate, solution	5.1	UN1470	II	5.1, 6.1.	T8	None	202	243	1 L	5 L	A	56, 58, 106
	Lead peroxide, see Lead dioxide	.....			.....		.....	.....	.....	.....	.....		
	Lead phosphite, dibasic	4.1	UN2989	II	4.1		None	212	240	5 kg	25 kg	B	34
	.....	.....		III	4.1		151	213	240	15 kg	50 kg	B	34
	Lead picrate (dry)	Forbidden			.....		.....	.....	.....	.....	.....		
	Lead styphnate (dry)	Forbidden			.....		.....	.....	.....	.....	.....		
	Lead styphnate, wetted *or* Lead trinitroresorcinate, wetted *with not less than 20 percent water or mixture of alcohol and water, by mass.*	1.1A	UN0130	II	1.1A	111, 117	None	62	None	Forbidden	Forbidden	E	2E, 6E
	Lead sulfate *with more than 3 percent free acid.*	8	UN1794	II	8		154	212	240	15 kg	50 kg	A	

	Lead trinitroresorcinate, *see* Lead styphnate, *etc.*	.....			.....		.....	.....	.....	.....	.....		
	Life-saving appliances, not self inflating *containing dangerous goods as equipment.*	9	UN3072		None ..		None	219	None ..	No limit	No limit	A	
	Life-saving appliances, self inflating	9	UN2990		None ..		None	219	None ..	No limit	No limit	A	
	Lighter replacement cartridges containing liquefied petroleum gases (and similar devices, each not exceeding 65 grams), see Lighters *or* lighter refills*etc. containing flammable gas.*	.....			.....		.....	.....	.....	.....	.....		
D	Lighters for cigars, cigarettes, *etc., with lighter fluids.*	3	NA1226	II	3	N10	None	21	None ..	Forbidden	Forbidden	B	
	Lighters, fuse	1.4S	UN0131	II	1.4S ...		None	62	None ..	25 kg	100 kg	A	
	Lighters *or* Lighter refills *cigarettes, containing flammable gas.*	2.1	UN1057		2.1	N10	None	21, 308.	None ..	1 kg	15 kg	B	40
	Lime, unslaked, see Calcium oxide ..	.....			.....		.....	.....	.....	.....	.....		
	Liquefied gas, flammable, n.o.s	2.1	UN3161		2.1		306	304	314, 315.	Forbidden	150 kg	D	40
	Liquefied gas, n.o.s	2.2	UN3163		2.2		306	304	314, 315.	75 kg	150 kg	A	
	Liquefied gas, oxidizing, n.o.s	2.2	UN3157		2.2, 5.1.		306	304	314, 315.	75 kg	150 kg	D	
I	Liquefied gas, toxic, corrosive, n.o.s. *Inhalation Hazard Zone A.*	2.3	UN3308	.....	2.3, 8	1	None	192	245	Forbidden	Forbidden	D	40
I	Liquefied gas, toxic, corrosive, n.o.s. *Inhalation Hazard Zone B.*	2.3	UN3308	.....	2.3, 8	2	None	304	314, 315.	Forbidden	Forbidden	D	40
I	Liquefied gas, toxic, corrosive, n.o.s. *Inhalation Hazard Zone C.*	2.3	UN3308	.....	2.3, 8	3	None	304	314, 315.	Forbidden	Forbidden	D	40
I	Liquefied gas, toxic, corrosive, n.o.s. *Inhalation Hazard Zone D.*	2.3	UN3308	.....	2.3, 8	4	None	304	314, 315.	Forbidden	Forbidden	D	40
I	Liquefied gas, toxic, flammable, corrosive, n.o.s. *Inhalation Hazard Zone A.*	2.3	UN3309	.....	2.3, 2.1, 8.	1	None	192	245	Forbidden	Forbidden	D	17, 40
I	Liquefied gas toxic, flammable, corrosive, n.o.s. *Inhalation Hazard Zone B.*	2.3	UN3309	.....	2.3, 2.1, 8.	2	None	304	314, 315.	Forbidden	Forbidden	D	17, 40
I	Liquefied gas, toxic, flammable, corrosive, n.o.s. *Inhalation Hazard Zone C.*	2.3	UN3309	.....	2.3, 2.1, 8.	3	None	304	314, 315.	Forbidden	Forbidden	D	17, 40
I	Liquefied gas, toxic, flammable, corrosive, n.o.s. *Inhalation Hazard Zone D.*	2.3	UN3309	.....	2.3, 2.1, 8.	4	None	304	314, 315.	Forbidden	Forbidden	D	17, 40
	Liquefied gas, toxic, flammable, n.o.s. *Inhalation Hazard Zone A.*	2.3	UN3160		2.3, 2.1.	1	None	192	245	Forbidden	Forbidden	D	40
	Liquefied gas, toxic, flammable, n.o.s. *Inhalation Hazard Zone B.*	2.3	UN3160		2.3, 2.1.	2, B9, B14	None	304	314, 315.	Forbidden	Forbidden	D	40
	Liquefied gas, toxic, flammable, n.o.s. *Inhalation Hazard Zone C.*	2.3	UN3160		2.3, 2.1.	3, B14	None	304	314, 315.	Forbidden	Forbidden	D	40

§172.101 HAZARDOUS MATERIALS TABLE—Continued

Symbols	Hazardous materials descriptions and proper shipping names	Hazard class or Division	Identification Numbers	PG	Label Codes	Special provisions	(8) Packaging (§173.***)			(9) Quantity limitations		(10) Vessel stowage	
							Exceptions	Nonbulk	Bulk	Passenger aircraft/rail	Cargo aircraft only	Location	Other
(1)	(2)	(3)	(4)	(5)	(6)	(7)	(8A)	(8B)	(8C)	(9A)	(9B)	(10A)	(10B)
	Liquefied gas, toxic, flammable, n.o.s. *Inhalation Hazard Zone D.*	2.3	UN3160		2.3, 2.1.	4	None	304	314, 315.	Forbidden	Forbidden	D	40
	Liquefied gas, toxic, n.o.s. *Inhalation Hazard Zone A.*	2.3	UN3162		2.3	1	None	192	245	Forbidden	Forbidden	D	40
	Liquefied gas, toxic, n.o.s. *Inhalation Hazard Zone B.*	2.3	UN3162		2.3	2, B9, B14	None	304	314, 315.	Forbidden	Forbidden	D	40
	Liquefied gas, toxic, n.o.s. *Inhalation Hazard Zone C.*	2.3	UN3162		2.3	3, B14	None	304	314, 315.	Forbidden	Forbidden	D	40
	Liquefied gas, toxic, n.o.s. *Inhalation Hazard Zone D.*	2.3	UN3162		2.3	4	None	304	314, 315.	Forbidden	Forbidden	D	40
I	Liquefied gas, toxic, oxidizing, corrosive, n.o.s. *Inhalation Hazard Zone A.*	2.3	UN3310		2.3, 5.1, 8.	1	None	192	245	Forbidden	Forbidden	D	40, 89, 90
I	Liquefied gas, toxic, oxidizing, corrosive, n.o.s. *Inhalation Hazard Zone B.*	2.3	UN3310		2.3, 2.1, 8.	2	None	304	314, 315.	Forbidden	Forbidden	D	40, 89, 90
I	Liquefied gas, toxic, oxidizing, corrosive, n.o.s. *Inhalation Hazard Zone C.*	2.3	UN3310		2.3, 2.1, 8.	3	None	304	314, 315.	Forbidden	Forbidden	D	40, 89, 90
I	Liquefied gas, toxic, oxidizing, corrosive, n.o.s. *Inhalation Hazard Zone D.*	2.3	UN3310		2.3, 2.1, 8.	4	None	304	314, 315.	Forbidden	Forbidden	D	40, 89, 90
	Liquefied gas, toxic, oxidizing, n.o.s. *Inhalation Hazard Zone A.*	2.3	UN3307		2.3, 5.1.	1	None	192	245	Forbidden	Forbidden	D	40
	Liquefied gas, toxic, oxidizing, n.o.s *Inhalation Hazard Zone B.*	2.3	UN3307		2.3, 5.1.	2	None	304	314, 315.	Forbidden	Forbidden	D	40
	Liquefied gas, toxic, oxidizing, n.o.s. *Inhalation Hazard Zone C.*	2.3	UN3307		2.3, 5.1.	3	None	304	314, 315.	Forbidden	Forbidden	D	40
	Liquefied gas, toxic, oxidizing, n.o.s. *Inhalation Hazard Zone D.*	2.3	UN3307		2.3, 5.1.	4	None	304	314, 315.	Forbidden	Forbidden	D	40
	Liquefied gases, *non-flammable charged with nitrogen, carbon dioxide or air.*	2.2	UN1058		2.2		306	304	None	75 kg	150 kg	A	
	Liquefied hydrocarbon gas, see Hydrocarbon gases, liquefied, n.o.s., *etc.*												
	Liquefied natural gas, see Methane, *etc. (UN 1972).*												

Liquefied petroleum gas *see* Petroleum gases, liquefied.	.....			.....		.....	.....	.....	.....	.....		
Lithium	4.3	UN1415	I	4.3	A7, A19, B100, N45	None	211	244	Forbidden	15 kg	E	
Lithium acetylide ethylenediamine complex, see Water reactive solid *etc.*	.....			.....		.....	.....	.....	.....	.....		
Lithium alkyls	4.2	UN2445	I	4.2, 4.3.	B11, T28, T40	None	181	244	Forbidden	Forbidden	D	
Lithium aluminum hydride	4.3	UN1410	I	4.3	A19, B100,	None	211	242	Forbidden	15 kg	E	
Lithium aluminum hydride, ethereal	4.3	UN1411	I	4.3, 3	A2, A3, A11, N34	None	201	244	Forbidden	1 L	D	40
Lithium batteries, contained in equipment.	9	UN3091	II	9	29	185(i)	185	None	5 kg	5 kg	A	
Lithium battery	9	UN3090	II	9	29	185	185	None	5 kg	35 kg gross	A	
Lithium borohydride	4.3	UN1413	I	4.3	A19, B100, N40	None	211	242	Forbidden	15 kg	E	
Lithium ferrosilicon	4.3	UN2830	II	4.3	A19, B105, B106	151	212	241	15 kg	50 kg	E	40, 85, 103
Lithium hydride	4.3	UN1414	I	4.3	A19, B100, N40	None	211	242	Forbidden	15 kg	E	
Lithium hydride, fused solid	4.3	UN2805	II	4.3	A8, A19, A20, B101, B106	151	212	241	15 kg	50 kg	E	
Lithium hydroxide, monohydrate *or* Lithium hydroxide, solid.	8	UN2680	II	8		154	212	240	15 kg	50 kg	A	
Lithium hydroxide, solution	8	UN2679	II	8	B2, T8	154	202	242	1 L	30 L	A	
	.....		III	8	T8	154	203	241	5 L	60 L	A	96
Lithium hypochlorite, dry *or* Lithium hypochlorite mixtures, dry.	5.1	UN1471	II	5.1	A9, N34	152	212	240	5 kg	25 kg	A	48, 56, 58, 69, 106, 116
Lithium in cartridges, see Lithium	.....			.....		.....	.....	.....	.....	.....		
Lithium nitrate	5.1	UN2722	III	5.1	A1	152	213	240	25 kg	100 kg	A	
Lithium nitride	4.3	UN2806	I	4.3	A19, B101, B106, N40	None	211	242	Forbidden	15 kg	E	
Lithium peroxide	5.1	UN1472	II	5.1	A9, N34	152	212	None	5 kg	25 kg	A	13, 75, 106
Lithium silicon	4.3	UN1417	II	4.3	A19, A20, B105, B106	151	212	241	15 kg	50 kg	A	85, 103
LNG, see Methane *etc. (UN 1972)*	.....			.....		.....	.....	.....	.....	.....		
London purple	6.1	UN1621	II	6.1		None	212	242	25 kg	100 kg	A	
LPG, see Petroleum gases, liquefied	.....			.....		.....	.....	.....	.....	.....		
Lye, see Sodium hydroxide, solutions.	.....			.....		.....	.....	.....	.....	.....		
Magnesium alkyls	4.2	UN3053	I	4.2	B11, T28, T29, T40	None	181	244	Forbidden	Forbidden	D	18
Magnesium aluminum phosphide	4.3	UN1419	I	4.3, 6.1.	A19, B100, N34, N40	None	211	242	Forbidden	15 kg	E	40, 85
+ Magnesium arsenate	6.1	UN1622	II	6.1		None	212	242	25 kg	100 kg	A	
Magnesium bisulfite solution, see Bisulfites, aqueous solutions, n.o.s.	.....			.....		.....	.....	.....	.....	.....		
Magnesium bromate	5.1	UN1473	II	5.1	A1	152	212	242	5 kg	25 kg	A	56, 58, 106

§172.101 HAZARDOUS MATERIALS TABLE—Continued

Symbols	Hazardous materials descriptions and proper shipping names	Hazard class or Division	Identification Numbers	PG	Label Codes	Special provisions	(8) Packaging (§173.***)			(9) Quantity limitations		(10) Vessel stowage	
							Exceptions	Nonbulk	Bulk	Passenger aircraft/rail	Cargo aircraft only	Location	Other
(1)	(2)	(3)	(4)	(5)	(6)	(7)	(8A)	(8B)	(8C)	(9A)	(9B)	(10A)	(10B)
	Magnesium chlorate	5.1	UN2723	II	5.1		152	212	242	5 kg	25 kg	A	56, 58, 106
	Magnesium diamide	4.2	UN2004	II	4.2	A8, A19, A20	None	212	241	15 kg	50 kg	C	
	Magnesium diphenyl	4.2	UN2005	I	4.2		None	187	244	Forbidden	Forbidden	C	
	Magnesium dross, wet or hot	Forbidden											
	Magnesium fluorosilicate	6.1	UN2853	III	6.1		153	213	240	100 kg	200 kg	A	26
	Magnesium granules, coated *particle size not less than 149 microns.*	4.3	UN2950	III	4.3	A1, A19, B108	151	213	240	25 kg	100 kg	A	
	Magnesium hydride	4.3	UN2010	I	4.3	A19, B100, N40	None	211	242	Forbidden	15 kg	E	
	Magnesium *or* Magnesium alloys *with more than 50 percent magnesium in pellets, turnings or ribbons.*	4.1	UN1869	III	4.1	A1	151	213	240	25 kg	100 kg	A	39
	Magnesium nitrate	5.1	UN1474	III	5.1	A1	152	213	240	25 kg	100 kg	A	
	Magnesium perchlorate	5.1	UN1475	II	5.1		152	212	242	5 kg	25 kg	A	56, 58, 106
	Magnesium peroxide	5.1	UN1476	II	5.1		152	212	242	5 kg	25 kg	A	13, 75, 106
	Magnesium phosphide	4.3	UN2011	I	4.3, 6.1.	A19, N40	None	211	None	Forbidden	15 kg	E	40, 85
	Magnesium, powder *or* Magnesium alloys, powder.	4.3	UN1418	I	4.3, 4.2.	A19, B56	None	211	244	Forbidden	15 kg	A	39
				II	4.3, 4.2.	A19, B56, B101, B106	None	212	241	15 kg	50 kg	A	39
				III	4.3, 4.2.	A19, B56, B106, B108	None	213	241	25 kg	100 kg	A	39
	Magnesium scrap, see Magnesium, *etc. (UN 1869).*												
	Magnesium silicide	4.3	UN2624	II	4.3	A19, A20, B105, B106	151	212	241	15 kg	50 kg	B	85, 103
	Magnetized material, see section 173.21.												
D	Maleic acid	8	NA2215	III	8		154	213	240	25 kg	100 kg	A	
	Maleic anhydride	8	UN2215	III	8	T7	154	213	240	25 kg	100 kg	A	
	Malononitrile	6.1	UN2647	II	6.1		None	212	242	25 kg	100 kg	A	12
	Mancozeb (manganese ethylenebisdithiocarbamate complex with zinc) see Maneb.												
	Maneb *or* Maneb preparations *with not less than 60 percent maneb.*	4.2	UN2210	III	4.2, 4.3.	57, A1, A19, B105	None	213	242	25 kg	100 kg	A	34

	Maneb stabilized *or* Maneb preparations, stabilized *against self-heating.*	4.3	UN2968	III	4.3	54, A1, A19, B108	151	213	242	25 kg	100 kg	B	34
	Manganese nitrate	5.1	UN2724	III	5.1	A1	152	213	240	25 kg	100 kg	A	
	Manganese resinate	4.1	UN1330	III	4.1	A1	151	213	240	25 kg	100 kg	A	
	Mannitan tetranitrate	Forbidden			.....		.....	.....	.....	.....	.....		
	Mannitol hexanitrate (dry)	Forbidden			.....		.....	.....	.....	.....	.....		
	Mannitol hexanitrate, wetted *or* Nitromannite, wetted *with not less than 40 percent water, or mixture of alcohol and water, by mass.*	1.1D	UN0133	II	1.1D ...	121	None	62	None ..	Forbidden	Forbidden	B	1E, 5E
	Marine pollutants, liquid or solid, n.o.s., see Environmentally hazardous substances, liquid *or* solid, n.o.s.	.....			.....		.....	.....	.....	.....	.....		
	Matches, block, see Matches, 'strike anywhere'.	.....			.....		.....	.....	.....	.....	.....		
	Matches, fusee	4.1	UN2254	III	4.1		186	186	None ..	Forbidden	Forbidden	A	
	Matches, safety *(book, card or strike on box).*	4.1	UN1944	III	4.1		186	186	None ..	25 kg	100 kg	A	
	Matches, strike anywhere	4.1	UN1331	III	4.1		186	186	None ..	Forbidden	Forbidden	B	
	Matches, wax, Vesta	4.1	UN1945	III	4.1		186	186	None ..	25 kg	100 kg	B	
	Matting acid, see Sulfuric acid	.....			.....		.....	.....	.....	.....	.....		
	Medicine, liquid, flammable, toxic, n.o.s.	3	UN3248	II	3, 6.1	36	None	202	None ..	1 L	5 L	B	40
	.....	.....		III	3, 6.1	36	150	203	None ..	5 L	5 L	A	
	Medicine, liquid, toxic, n.o.s	6.1	UN1851	II	6.1		153	202	243	5 L	5 L	C	40
	.....	.....		III	6.1		153	203	241	5 L	5 L	C	40
	Medicine, solid, toxic, n.o.s	6.1	UN3249	II	6.1	36	153	212	None ..	5 kg	5 kg	C	40
	.....	.....		III	6.1	36	153	213	None ..	5 kg	5 kg	C	40
D	Medicines, *corrosive, liquid,* n.o.s	8	NA1760	II	8	B3	154	202	242	1 L	30 L	B	40
	.....	.....		III	8		154	203	241	5 L	60 L	A	40
D	Medicines, *corrosive, solid,* n.o.s	8	NA1759	II	8		154	212	240	15 kg	50 kg	A	
	.....	.....		III	8		154	213	240	25 kg	100 kg	A	
D	Medicines, *flammable, liquid,* n.o.s ...	3	NA1993	I	3		150	201	243	1 L	30 L	E	
	.....	.....		II	3		150	202	242	5 L	60 L	B	
	.....	.....		III	3	B1	150	203	242	60 L	220 L	A	
D	Medicines, *flammable, solid,* n.o.s	4.1	NA1325	II	4.1		151	212	240	15 kg	50 kg	B	
D	Medicines, *oxidizing substance, solid,* n.o.s.	5.1	NA1479	II	5.1		152	212	242	5 kg	25 kg	B	56, 58, 69, 106
	Memtetrahydrophthalic anhydride, see Corrosive liquids, n.o.s.	.....			.....		.....	.....	.....	.....	.....		
	Mercaptans, liquid, flammable, toxic, n.o.s. *or* Mercaptan mixtures, liquid, flammable, toxic, n.o.s.	3	UN1228	II	3, 6.1	T13	None	202	243	Forbidden	60 L	B	40, 95
	.....	.....		III	3, 6.1	B1, T8	150	203	242	5 L	220 L	A	40, 95

§172.101 HAZARDOUS MATERIALS TABLE—Continued

Symbols	Hazardous materials descriptions and proper shipping names	Hazard class or Division	Identification Numbers	PG	Label Codes	Special provisions	(8) Packaging (§173.***)			(9) Quantity limitations		(10) Vessel stowage	
							Exceptions	Nonbulk	Bulk	Passenger aircraft/rail	Cargo aircraft only	Location	Other
(1)	(2)	(3)	(4)	(5)	(6)	(7)	(8A)	(8B)	(8C)	(9A)	(9B)	(10A)	(10B)
	Mercaptans, liquid, toxic, flammable, n.o.s. *or* Mercaptan mixtures, liquid, toxic, flammable, n.o.s., *flash point not less than 23 degrees C.*	6.1	UN3071	II	6.1, 3	T14	None	202	243	5 L	60 L	C	40, 121
	5-Mercaptotetrazol-1-acetic acid	1.4C	UN0448	II	1.4C		None	62	None	Forbidden	75 kg	A	1E, 5E, 24E
	Mercuric arsenate	6.1	UN1623	II	6.1		None	212	242	25 kg	100 kg	A	
	Mercuric chloride	6.1	UN1624	II	6.1		None	212	242	25 kg	100 kg	A	
	Mercuric compounds, see Mercury compounds, *etc.*												
	Mercuric nitrate	6.1	UN1625	II	6.1	N73	None	212	242	25 kg	100 kg	A	
+	Mercuric potassium cyanide	6.1	UN1626	I	6.1	N74, N75	None	211	242	5 kg	50 kg	A	26
	Mercuric sulfocyanate, see Mercury thiocyanate.												
	Mercurol, see Mercury nucleate												
	Mercurous azide	Forbidden											
	Mercurous compounds, see Mercury compounds, *etc.*												
	Mercurous nitrate	6.1	UN1627	II	6.1		None	212	242	25 kg	100 kg	A	
A, W	Mercury	8	UN2809	III	8		164	164	240	35 kg	35 kg	B	40, 97
	Mercury acetate	6.1	UN1629	II	6.1		None	212	242	25 kg	100 kg	A	
	Mercury acetylide	Forbidden											
	Mercury ammonium chloride	6.1	UN1630	II	6.1		None	212	242	25 kg	100 kg	A	
	Mercury based pesticides, liquid, flammable, toxic, *flash point less than 23 degrees C.*	3	UN2778	I	3, 6.1		None	201	243	Forbidden	30 L	B	40
				II	3, 6.1		None	202	243	1 L	60 L	B	40
	Mercury based pesticides, liquid, toxic.	6.1	UN3012	I	6.1	T42	None	201	243	1 L	30 L	B	40
				II	6.1	T14	None	202	243	5 L	60 L	B	40
				III	6.1	T14	153	203	241	60 L	220 L	A	40
	Mercury based pesticides, liquid, toxic, flammable, *flashpoint not less than 23 degrees C.*	6.1	UN3011	I	6.1, 3	T42	None	201	243	1 L	30 L	B	40
				II	6.1, 3	T14	None	202	243	5 L	60 L	B	40
				III	6.1, 3	T14	153	203	242	60 L	220 L	A	40
	Mercury based pesticides, solid, toxic.	6.1	UN2777	I	6.1		None	211	242	5 kg	50 kg	A	40
				II	6.1		None	212	242	25 kg	100 kg	A	40

	.....	.....		III	6.1		153	213	240	100 kg	200 kg	A	40
	Mercury benzoate	6.1	UN1631	II	6.1		None	212	242	25 kg	100 kg	A	
	Mercury bromides	6.1	UN1634	II	6.1		None	212	242	25 kg	100 kg	A	
	Mercury compounds, liquid, n.o.s	6.1	UN2024	I	6.1		None	201	243	1 L	30 L	B	40
	.....	.....		II	6.1		None	202	243	5 L	60 L	B	40
	.....	.....		III	6.1		153	203	241	60 L	220 L	B	40
	Mercury compounds, solid, n.o.s	6.1	UN2025	I	6.1		None	211	242	5 kg	50 kg	A	
	.....	.....		II	6.1		None	212	242	25 kg	100 kg	A	
	.....	.....		III	6.1		153	213	240	100 kg	200 kg	A	
A	Mercury *contained in manufactured articles.*	8	UN2809	III	8		None	164	None ..	No limit	No limit	B	40, 97
	Mercury cyanide	6.1	UN1636	II	6.1	N74, N75	None	212	242	25 kg	100 kg	A	26
	Mercury fulminate, wetted *with not less than 20 percent water, or mixture of alcohol and water, by mass.*	1.1A	UN0135	II	1.1A ...	111, 117	None	62	None ..	Forbidden	Forbidden	E	2E, 6E
	Mercury gluconate	6.1	UN1637	II	6.1		None	212	242	25 kg	100 kg	A	
	Mercury iodide, *solid*	6.1	UN1638	II	6.1		None	212	242	25 kg	100 kg	A	
	Mercury iodide aquabasic ammonobasic (Iodide of Millon's base).	Forbidden			.....		.....	.....	.....	.....	.....		
	Mercury iodide, *solution*	6.1	UN1638	II	6.1		None	202	243	5 L	60 L	A	
	Mercury nitride	Forbidden			.....		.....	.....	.....	.....	.....		
	Mercury nucleate	6.1	UN1639	II	6.1		None	212	242	25 kg	100 kg	A	
	Mercury oleate	6.1	UN1640	II	6.1		None	212	242	25 kg	100 kg	A	
	Mercury oxide	6.1	UN1641	II	6.1		None	212	242	25 kg	100 kg	A	
	Mercury oxycyanide	Forbidden			.....		.....	.....	.....	.....	.....		
	Mercury oxycyanide, desensitized	6.1	UN1642	II	6.1		None	212	242	25 kg	100 kg	A	26, 91
	Mercury potassium iodide	6.1	UN1643	II	6.1		None	212	242	25 kg	100 kg	A	
	Mercury salicylate	6.1	UN1644	II	6.1		None	212	242	25 kg	100 kg	A	
+	Mercury sulfates	6.1	UN1645	II	6.1		None	212	242	25 kg	100 kg	A	
	Mercury thiocyanate	6.1	UN1646	II	6.1		None	212	242	25 kg	100 kg	A	
	Mesityl oxide	3	UN1229	III	3	B1, T1	None	203	242	60 L	220 L	A	
	Metal alkyl halides, n.o.s. *or* Metal aryl halides, n.o.s.	4.2	UN3049	I	4.2	B9, B11, T28, T29, T40	None	181	244	Forbidden	Forbidden	D	
	Metal alkyl hydrides, n.o.s. *or* Metal aryl hydrides, n.o.s.	4.2	UN3050	I	4.2	B9, B11, T28, T29, T40	None	181	244	Forbidden	Forbidden	D	
D	Metal alkyl, solution, n.o.s	3	NA9195	II	3		150	202	242	1 L	4 L	B	
	Metal alkyls, n.o.s. *or* Metal aryls, n.o.s.	4.2	UN2003	I	4.2	B11, T42	None	181	244	Forbidden	Forbidden	D	
	Metal carbonyls, n.o.s	6.1	UN3281	I	6.1	5	None	201	243	1 L	30 L	B	40
	.....	.....		II	6.1	T14	None	202	243	5 L	60 L	B	40
	.....	.....		III	6.1	T7	153	203	241	60 L	220 L	A	40
	Metal catalyst, dry	4.2	UN2881	I	4.2	N34	None	187	None ..	Forbidden	Forbidden	C	
	.....	.....		II	4.2	N34	None	187	242	Forbidden	50 kg	C	
	.....	.....		III	4.2	N34	241	187	None ..	25 kg	100 kg	C	
	Metal catalyst, wetted *with a visible excess of liquid.*	4.2	UN1378	II	4.2	A2, A8, N34	None	212	None ..	Forbidden	50 kg	C	
	Metal hydrides, flammable, n.o.s	4.1	UN3182	II	4.1	A1	151	212	240	15 kg	50 kg	E	
	.....	.....		III	4.1	A1	151	213	240	25 kg	100 kg	E	
	Metal hydrides, water reactive, n.o.s	4.3	UN1409	I	4.3	A19, B100, N34, N40	None	211	242	Forbidden	15 kg	D	

§172.101 HAZARDOUS MATERIALS TABLE—Continued

Symbols	Hazardous materials descriptions and proper shipping names	Hazard class or Division	Identification Numbers	PG	Label Codes	Special provisions	(8) Packaging (§173.***)			(9) Quantity limitations		(10) Vessel stowage	
							Exceptions	Non-bulk	Bulk	Passenger aircraft/rail	Cargo aircraft only	Location	Other
(1)	(2)	(3)	(4)	(5)	(6)	(7)	(8A)	(8B)	(8C)	(9A)	(9B)	(10A)	(10B)
	.....	.....		II	4.3	A19, B101, B106, N34, N40	151	212	242	15 kg	50 kg	D	
	Metal powder, self-heating, n.o.s	4.2	UN3189	II	4.2		None	212	241	15 kg	50 kg	C	
	.....	.....		III	4.2		None	213	241	25 kg	100 kg	C	
	Metal powders, flammable, n.o.s	4.1	UN3089	II	4.1		151	212	240	15 kg	50 kg	B	
	.....	.....		III	4.1		151	213	240	25 kg	100 kg	B	
	Metal salts of methyl nitramine (dry)	Forbidden			.....		.....	.....	.....	.....	.....		
	Metal salts of organic compounds, flammable, n.o.s.	4.1	UN3181	II	4.1	A1	151	212	240	15 kg	50 kg	B	40
	.....	.....		III	4.1	A1	151	213	240	25 kg	100 kg	B	40
	Metaldehyde	4.1	UN1332	III	4.1	A1	151	213	240	25 kg	100 kg	A	
	Metallic substance, water-reactive, n.o.s.	4.3	UN3208	I	4.3	B101, B106	None	211	242	Forbidden	15 kg	E	40
	.....	.....		II	4.3	B101, B106	151	212	242	15 kg	50 kg	E	40
	.....	.....		III	4.3	B105, B108	151	213	241	25 kg	100 kg	E	40
	Metallic substance, water-reactive, self-heating, n.o.s.	4.3	UN3209	I	4.3, 4.2.	B100	None	211	242	Forbidden	15 kg	E	40
	.....	.....		II	4.3, 4.2.	B101, B106	None	212	242	15 kg	50 kg	E	40
	.....	.....		III	4.3, 4.2.	B101, B106	None	213	242	25 kg	100 kg	E	40
	Methacrylaldehyde, inhibited	3	UN2396	II	3, 6.1	45, T8	None	202	243	1 L	60 L	E	40
	Methacrylic acid, inhibited	8	UN2531	III	8	T8, T47	154	203	241	5 L	60 L	A	
+	Methacrylonitrile, inhibited	3	UN3079	I	3, 6.1	2, B9, B14, B32, B74, T38, T43, T45	None	227	244	Forbidden	30 L	D	12, 40, 48
	Methallyl alcohol	3	UN2614	III	3	B1, T1	150	203	242	60 L	220 L	A	
	Methane and hydrogen, mixtures, see Hydrogen and methane, mixtures, *etc.*	.....			.....		.....	.....	.....	.....	.....		
	Methane, compressed *or* Natural gas, compressed *(with high methane content).*	2.1	UN1971		2.1		306	302	302	Forbidden	150 kg	E	40
	Methane, refrigerated liquid *(cryogenic liquid) or* Natural gas, refrigerated liquid *(cryogenic liquid), with high methane content).*	2.1	UN1972		2.1		None	None ..	318	Forbidden	Forbidden	D	40

	Methanesulfonyl chloride	6.1	UN3246	I	6.1, 8	2,25, B9, B14, B32, B74, T38, T43, T45	None	227	244	Forbidden	Forbidden	D	40
I	Methanol	3	UN1230	II	3, 6.1	T8	150	202	242	1 L	60 L	B	40
D	Methanol	3	UN1230	II	3	T8	150	202	242	1 L	60 L	B	40
	Methazoic acid	Forbidden											
	4-Methoxy-4-methylpentan-2-one	3	UN2293	III	3	B1, T1	150	203	242	60 L	220 L	A	
	1-Methoxy-2-propanol	3	UN3092	III	3	B1, T1	150	203	242	60 L	220 L	A	
+	Methoxymethyl isocyanate	3	UN2605	I	3, 6.1	1, B9, B14, B30, B72, T38, T43, T44	None	226	244	Forbidden	Forbidden	D	40
	Methyl acetate	3	UN1231	II	3	B101, T8	150	202	242	5 L	60 L	B	
	Methyl acetylene and propadiene mixtures, stabilized.	2.1	UN1060		2.1		306	304	314, 315.	Forbidden	150 kg	B	40
	Methyl acrylate, inhibited	3	UN1919	II	3	T8	150	202	242	5 L	60 L	B	
	Methyl alcohol, see Methanol												
	Methyl allyl chloride	3	UN2554	II	3	B101, T8	150	202	242	5 L	60 L	E	
	Methyl amyl ketone, see Amyl methyl ketone.												
	Methyl bromide	2.3	UN1062		2.3	3, B14	None	193	314, 315.	Forbidden	25 kg	D	40
	Methyl bromide and chloropicrin mixtures with more than 2 percent chloropicrin, see Chloropicrin and methyl bromide mixtures.												
	Methyl bromide and chloropicrin mixtures with not more than 2 percent chloropicrin, see Methyl bromide.												
	Methyl bromide and ethylene dibromide mixtures, liquid.	6.1	UN1647	I	6.1	2, B9, B14, B32, B74, N65, T38, T43, T45	None	227	244	Forbidden	30 L	C	40
	Methyl bromoacetate	6.1	UN2643	II	6.1	B100, T8	None	202	243	5 L	60 L	D	40
	2-Methyl-1-butene	3	UN2459	I	3	T14	None	201	243	1 L	30 L	E	
	2-Methyl-2-butene	3	UN2460	II	3	T14	None	202	242	5 L	60 L	E	
	3-Methyl-1-butene	3	UN2561	I	3	T20	None	201	243	1 L	30 L	E	
	Methyl tert-butyl ether	3	UN2398	II	3	B101, T14	150	202	242	5 L	60 L	E	
	Methyl butyrate	3	UN1237	II	3	T1	150	202	242	5 L	60 L	B	
	Methyl chloride, *or* Refrigerant gas R 40.	2.1	UN1063		2.1		306	304	314, 315.	5 kg	100 kg	D	40
	Methyl chloride and chloropicrin mixtures, see Chloropicrin and methyl chloride mixtures.												
	Methyl chloride and methylene chloride mixtures.	2.1	UN1912		2.1		306	304	314, 315.	Forbidden	150 kg	D	40
	Methyl chloroacetate	6.1	UN2295	I	6.1, 3	T42	None	201	243	1 L	30 L	D	
	Methyl chlorocarbonate, see Methyl chloroformate.												
	Methyl chloroform, see 1,1,1-Trichloroethane.												

§172.101 HAZARDOUS MATERIALS TABLE—Continued

Symbols	Hazardous materials descriptions and proper shipping names	Hazard class or Division	Identification Numbers	PG	Label Codes	Special provisions	(8) Packaging (§173.***)			(9) Quantity limitations		(10) Vessel stowage	
							Exceptions	Nonbulk	Bulk	Passenger aircraft/rail	Cargo aircraft only	Location	Other
(1)	(2)	(3)	(4)	(5)	(6)	(7)	(8A)	(8B)	(8C)	(9A)	(9B)	(10A)	(10B)
	Methyl chloroformate	6.1	UN1238	I	6.1, 3, 8.	1, B9, B14, B30, B72, N34, T38, T43, T44	None	226	244	Forbidden	Forbidden	D	21, 40, 100
	Methyl chloromethyl ether	6.1	UN1239	I	6.1, 3	1, B9, B14, B30, B72, T38, T43, T44	None	226	244	Forbidden	Forbidden	D	40
	Methyl 2-chloropropionate	3	UN2933	III	3	B1, T7	150	203	242	60 L	220 L	A	
	Methyl dichloroacetate	6.1	UN2299	III	6.1	T1	153	203	241	60 L	220 L	A	
	Methyl ethyl ether, see Ethyl methyl ether.												
	Methyl ethyl ketone, *see* Ethyl methyl ketone.												
	Methyl ethyl ketone peroxide, in solution with more than 9 percent by mass active oxygen.	Forbidden											
	2-Methyl-5-ethylpyridine	6.1	UN2300	III	6.1	T7	153	203	241	60 L	220 L	A	
	Methyl fluoride, *or* Refrigerant gas R 41.	2.1	UN2454		2.1		306	304	314, 315.	Forbidden	150 kg	E	40
	Methyl formate	3	UN1243	I	3	T20	150	201	243	1 L	30 L	E	
	2-Methyl-2-heptanethiol	6.1	UN3023	I	6.1, 3	2, B9, B14, B32, B74, T38, T43, T45	None	227	244	Forbidden	Forbidden	D	40, 102
	Methyl iodide	6.1	UN2644	I	6.1	2, B9, B14, B32, B74, T38, T43, T45	None	227	244	Forbidden	Forbidden	A	12, 40
	Methyl isobutyl carbinol	3	UN2053	III	3	B1, T1	150	203	242	60 L	220 L	A	
	Methyl isobutyl ketone	3	UN1245	II	3	T1	150	202	242	5 L	60 L	B	
	Methyl isobutyl ketone peroxide, in solution with more than 9 percent by mass active oxygen.	Forbidden											
	Methyl isocyanate	6.1	UN2480	I	6.1, 3	1, A7, B9, B14, B30, B72, T38, T43, T44	None	226	244	Forbidden	Forbidden	D	26, 40
	Methyl isopropenyl ketone, inhibited	3	UN1246	II	3	T7	150	202	242	5 L	60 L	B	
	Methyl isothiocyanate	6.1	UN2477	I	6.1,3	2, B9, B14, B32, B74, T38, T43, T45	None	227	244	Forbidden	Forbidden	A	
	Methyl isovalerate	3	UN2400	II	3	T1	150	202	242	5 L	60 L	B	

	Methyl magnesium bromide, in ethyl ether.	4.3	UN1928	I	4.3, 3		None	201	243	Forbidden	1 L	D	
	Methyl mercaptan	2.3	UN1064		2.3, 2.1.	3, B7, B9, B14	None	304	314, 315.	Forbidden	25 kg	D	40
	Methyl mercaptopropionaldehyde, see Thia-4-pentanal.												
	Methyl methacrylate monomer, inhibited.	3	UN1247	II	3	T8	150	202	242	5 L	60 L	B	40
	Methyl nitramine (dry)	Forbidden											
	Methyl nitrate	Forbidden											
	Methyl nitrite	Forbidden											
	Methyl norbornene dicarboxylic anhydride, see Corrosive liquids, n.o.s.												
	Methyl orthosilicate	6.1	UN2606	I	6.1, 3	2, B9, B14, B32, B74, T38, T43, T45	None	227	244	Forbidden	30 L	E	40
D	Methyl parathion *liquid*	6.1	NA3018	II	6.1	N76, T14	None	202	243	Forbidden	1 L	A	40
D	Methyl parathion *solid*	6.1	NA2783	II	6.1	N77	None	212	242	25 kg	100 kg	A	40
D	Methyl phosphonic dichloride	6.1	NA9206	I	6.1, 8	2, A3, B9, B14, B32, B74, N34, N43, T38, T43, T45	None	227	244	Forbidden	Forbidden	C	
	Methyl phosphonothioic dichloride, anhydrous, see Corrosive liquid, n.o.s.												
D	Methyl phosphonous dichloride, *pyrophoric liquid.*	6.1	NA2845	I	6.1, 4.2.	2, B9, B14, B16, B32, B74, T38, T43, T45	None	227	244	Forbidden	Forbidden	D	18
	Methyl picric acid (heavy metal salts of).	Forbidden											
	Methyl propionate	3	UN1248	II	3	B101, T2	150	202	242	5 L	60 L	B	
	Methyl propyl ether	3	UN2612	II	3	T14	150	202	242	5 L	60 L	E	40
	Methyl propyl ketone	3	UN1249	II	3	T1	150	202	242	5 L	60 L	B	
	Methyl sulfate, see Dimethyl sulfate												
	Methyl sulfide, see Dimethyl sulfide												
	Methyl trichloroacetate	6.1	UN2533	III	6.1	T1	153	203	241	60 L	220 L	A	
	Methyl trimethylol methane trinitrate	Forbidden											
	Methyl vinyl ketone, stabilized	6.1	UN1251	I	6.1, 3, 8.	1, 25, B9, B14, B30, B72, T38, T43, T44	None	226	244	Forbidden	Forbidden	B	40
	Methylal	3	UN1234	II	3	T14	None	202	242	5 L	60 L	E	
	Methylamine, anhydrous	2.1	UN1061		2.1		306	304	314, 315.	Forbidden	150 kg	B	40
	Methylamine, aqueous solution	3	UN1235	II	3, 8	B1, T8	150	202	243	1 L	5 L	E	41
	Methylamine dinitramine and dry salts thereof.	Forbidden											
	Methylamine nitroform	Forbidden											
	Methylamine perchlorate (dry)	Forbidden											
	Methylamyl acetate	3	UN1233	III	3	B1, T1	150	203	242	60 L	220 L	A	

§172.101 HAZARDOUS MATERIALS TABLE—Continued

Symbols	Hazardous materials descriptions and proper shipping names	Hazard class or Division	Identification Numbers	PG	Label Codes	Special provisions	(8) Packaging (§173.***)			(9) Quantity limitations		(10) Vessel stowage	
							Exceptions	Non-bulk	Bulk	Passenger aircraft/rail	Cargo aircraft only	Location	Other
(1)	(2)	(3)	(4)	(5)	(6)	(7)	(8A)	(8B)	(8C)	(9A)	(9B)	(10A)	(10B)
	N-Methylaniline	6.1	UN2294	III	6.1	T7	153	203	241	60 L	220 L	A	
	alpha-Methylbenzyl alcohol	6.1	UN2937	III	6.1	T1	153	203	241	60 L	220 L	A	
	3-Methylbutan-2-one	3	UN2397	II	3	T1	150	202	242	5 L	60 L	B	
	N-Methylbutylamine	3	UN2945	II	3, 8	T8	None	202	243	1 L	5 L	B	40
	Methylchlorosilane	2.3	UN2534		2.3, 2.1, 8.	2, A2, A3, A7, B9, B14, N34	None	226	314, 315.	Forbidden	Forbidden	D	17, 40
	Methylcyclohexane	3	UN2296	II	3	B1, T1	150	202	242	5 L	60 L	B	
	Methylcyclohexanols, *flammable*	3	UN2617	III	3	B1, T2	150	203	242	60 L	220 L	A	
	Methylcyclohexanone	3	UN2297	III	3	B1, T1	150	203	242	60 L	220 L	A	
	Methylcyclopentane	3	UN2298	II	3	T8	150	202	242	5 L	60 L	B	
D	Methyldichloroarsine	6.1	NA1556	I	6.1	2	None	192	None	Forbidden	Forbidden	D	40, 95
	Methyldichlorosilane	4.3	UN1242	I	4.3, 8, 3.	A2, A3, A7, B6, B77, N34, T16, T26	None	201	243	Forbidden	1 L	D	21, 28, 40, 49, 100
	Methylene chloride, see Dichloromethane.												
	Methylene glycol dinitrate	Forbidden											
	2-Methylfuran	3	UN2301	II	3	T7	150	202	242	5 L	60 L	E	
	a-Methylglucoside tetranitrate	Forbidden											
	a-Methylglycerol trinitrate	Forbidden											
	5-Methylhexan-2-one	3	UN2302	III	3	B1, T1	150	203	242	60 L	220 L	A	
	Methylhydrazine	6.1	UN1244	I	6.1, 3, 8.	1, B9, B14, B30, B72, B77, N34, T38, T43, T44	None	226	244	Forbidden	Forbidden	D	21, 40, 49, 100
	4-Methylmorpholine *or* n-methylmorpholine.	3	UN2535	II	3, 8	B6, T8	None	202	243	1 L	5 L	B	40
	Methylpentadienes	3	UN2461	II	3	T7	150	202	242	5 L	60 L	E	
	2-Methylpentan-2-ol	3	UN2560	III	3	B1, T1	150	203	242	60 L	220 L	A	
	Methylpentanes, see Hexanes												
	Methylphenyldichlorosilane	8	UN2437	II	8	T8, T26	154	202	242	1 L	30 L	C	40
	1-Methylpiperidine	3	UN2399	II	3, 8	T8	None	202	243	1 L	5 L	B	
	Methyltetrahydrofuran	3	UN2536	II	3	B101, T7	150	202	242	5 L	60 L	B	
	Methyltrichlorosilane	3	UN1250	I	3, 8	A7, B6, B77, N34, T14, T26	None	201	243	Forbidden	2.5 L	B	40
	alpha-Methylvaleraldehyde	3	UN2367	II	3	B1, T1	150	202	242	5 L	60 L	B	
	Mine rescue equipment containing carbon dioxide, see Carbon dioxide.												

	Mines *with bursting charge*	1.1F	UN0136	II	1.1F			62	None	Forbidden	Forbidden	E	
	Mines *with bursting charge*	1.1D	UN0137	II	1.1D			62	None	Forbidden	Forbidden	B	3E, 7E
	Mines *with bursting charge*	1.2D	UN0138	II	1.2D			62	None	Forbidden	Forbidden	B	3E, 7E
	Mines *with bursting charge*	1.2F	UN0294	II	1.2F			62	None	Forbidden	Forbidden	E	
	Mixed acid, see Nitrating acid, mixtures *etc.*												
	Mobility aids, see Wheel chair, electric.												
D	Model rocket motor	1.4C	NA0276	II	1.4C	51	None	62	None	Forbidden	75 kg	A	24E
D	Model rocket motor	1.4S	NA0323	II	1.4S	51	None	62	None	25 kg	100 kg	A	9E
	Molybdenum pentachloride	8	UN2508	III	8	T8, T26	154	213	240	25 kg	100 kg	C	40
	Monochloroacetone (unstabilized)	Forbidden											
	Monochloroethylene, see Vinyl chloride, inhibited.												
	Monoethanolamine, see Ethanolamine, solutions.												
	Monoethylamine, see Ethylamine												
	Morpholine	3	UN2054	III	3	B1, T1	150	203	242	60 L	220 L	A	
	Morpholine, aqueous, mixture, see Corrosive liquids, n.o.s.												
	Motor fuel anti-knock compounds *see* Motor fuel anti-knock mixtures.												
+	Motor fuel anti-knock mixtures	6.1	UN1649	I	6.1, 3	14, B9, B90, T26, T39	None	201	244	Forbidden	30 L	D	25, 40
	Motor spirit, *see* Gasoline												
	Muriatic acid, see Hydrochloric acid solution.												
	Musk xylene, *see* 5-tert-Butyl2,4,6-trinitro-m-xylene.												
	Naphtha see Petroleum distallate n.o.s.												
	Naphthalene, crude *or* Naphthalene, refined.	4.1	UN1334	III	4.1	A1	151	213	240	25 kg	100 kg	A	
	Naphthalene diozonide	Forbidden											
	Naphthalene, molten	4.1	UN2304	III	4.1	A1, T8	151	213	241	Forbidden	Forbidden	C	
	beta-Naphthylamine	6.1	UN1650	II	6.1	T12, T26	None	212	242	25 kg	100 kg	A	
	alpha-Naphthylamine	6.1	UN2077	III	6.1	T7	153	213	240	100 kg	200 kg	A	
	Naphthylamineperchlorate	Forbidden											
	Naphthylthiourea	6.1	UN1651	II	6.1		None	212	242	25 kg	100 kg	A	
	Naphthylurea	6.1	UN1652	II	6.1		None	212	242	25 kg	100 kg	A	
	Natural gases (with high methane content), see Methane, *etc. (UN 1971, UN 1972).*												
	Neohexane, see Hexanes												
	Neon, compressed	2.2	UN1065		2.2		306	302	302	75 kg	150 kg	A	
	Neon, refrigerated liquid *(cryogenic liquid).*	2.2	UN1913		2.2		320	316	None	50 kg	500 kg	B	
	New explosive or explosive device, see sections 173.51 and 173.56.												
	Nickel carbonyl	6.1	UN1259	I	6.1, 3	1	None	198	None	Forbidden	Forbidden	D	18, 40

§172.101 HAZARDOUS MATERIALS TABLE—Continued

Symbols	Hazardous materials descriptions and proper shipping names	Hazard class or Division	Identification Numbers	PG	Label Codes	Special provisions	(8) Packaging (§173.***)			(9) Quantity limitations		(10) Vessel stowage	
							Exceptions	Nonbulk	Bulk	Passenger aircraft/rail	Cargo aircraft only	Location	Other
(1)	(2)	(3)	(4)	(5)	(6)	(7)	(8A)	(8B)	(8C)	(9A)	(9B)	(10A)	(10B)
	Nickel cyanide	6.1	UN1653	II	6.1	N74, N75	None	212	242	25 kg	100 kg	A	26
	Nickel nitrate	5.1	UN2725	III	5.1	A1	152	213	240	25 kg	100 kg	A	
	Nickel nitrite	5.1	UN2726	III	5.1	A1	152	213	240	25 kg	100 kg	A	56, 58
	Nickel picrate	Forbidden											
	Nicotine	6.1	UN1654	II	6.1		None	202	243	5 L	60 L	A	
	Nicotine compounds, liquid, n.o.s. *or* Nicotine preparations, liquid, n.o.s.	6.1	UN3144	I	6.1	A4, T42	None	201	243	1 L	30 L	B	40
				II	6.1	T14	None	202	243	5 L	60 L	B	40
				III	6.1	T7	153	203	241	60 L	220 L	B	40
	Nicotine compounds, solid, n.o.s. *or* Nicotine preparations, solid, n.o.s.	6.1	UN1655	I	6.1		None	211	242	5 kg	50 kg	B	
				II	6.1		None	212	242	25 kg	100 kg	A	
				III	6.1		153	213	240	100 kg	200 kg	A	
	Nicotine hydrochloride *or* Nicotine hydrochloride solution.	6.1	UN1656	II	6.1		None	202	243	5 L	60 L	A	
	Nicotine salicylate	6.1	UN1657	II	6.1		None	212	242	25 kg	100 kg	A	
	Nicotine sulfate, *solid*	6.1	UN1658	II	6.1		None	212	242	25 kg	100 kg	A	
	Nicotine sulfate, *solution*	6.1	UN1658	II	6.1	T14	None	202	243	5 L	60 L	A	
	Nicotine tartrate	6.1	UN1659	II	6.1		None	212	242	25 kg	100 kg	A	
	Nitrated paper (unstable)	Forbidden											
	Nitrates, inorganic, aqueous solution, n.o.s.	5.1	UN3218	II	5.1	58, T8	152	202	242	1 L	5 L	B	46
				III	5.1	58, T8	152	203	241	2.5 L	30 L	B	46
	Nitrates, inorganic, n.o.s	5.1	UN1477	II	5.1		152	212	240	5 kg	25 kg	A	46
				III	5.1		152	213	240	25 kg	100 kg	A	46
	Nitrates of diazonium compounds	Forbidden											
	Nitrating acid mixtures, spent *with more than 50 percent nitric acid.*	8	UN1826	I	8, 5.1	T12, T27	None	158	243	Forbidden	2.5 L	D	40, 66
	Nitrating acid mixtures spent *with not more than 50 percent nitric acid.*	8	UN1826	II	8	B2, B100, T12, T27	None	158	242	Forbidden	30 L	D	40
	Nitrating acid mixtures *with more than 50 percent nitric acid.*	8	UN1796	I	8, 5.1	T12, T27	None	158	243	Forbidden	2.5 L	D	40, 66
	Nitrating acid mixtures *with not more than 50 percent nitric acid.*	8	UN1796	II	8	B2, T12, T27	None	158	242	Forbidden	30 L	D	40
	Nitric acid *other than red fuming, with more than 70 percent nitric acid.*	8	UN2031	I	8	B47, B53, T9, T27	None	158	243	Forbidden	2.5 L	D	44, 66, 89, 90, 110, 111

	Nitric acid *other than red fuming, with not more than 70 percent nitric acid.*	8	UN2031	II	8	B2, B47, B53, T9, T27	None	158	242	Forbidden	30 L	D	44, 66, 89, 90, 110, 111
+	Nitric acid, red fuming	8	UN2032	I	8, 5.1, 6.1.	2, B9, B32, B74, T38, T43, T45	None	227	244	Forbidden	Forbidden	D	40, 66, 74, 89, 90
	Nitric oxide, compressed	2.3	UN1660		2.3, 5.1, 8.	1, B37, B46, B50, B60, B77	None	337	None ..	Forbidden	Forbidden	D	40, 89, 90
	Nitric oxide and dinitrogen tetroxide mixtures *or* Nitric oxide and nitrogen dioxide mixtures.	2.3	UN1975		2.3, 5.1, 8.	1, B7, B9, B14, B45, B46, B61, B66, B67, B77	None	337	None ..	Forbidden	Forbidden	D	40, 89, 90
	Nitriles, flammable, toxic, n.o.s	3	UN3273	I	3, 6.1		None	201	243	Forbidden	30 L	E	40, 52
	.....	.....		II	3, 6.1	T14	None	202	243	1 L	60 L	B	40, 52
	Nitriles, toxic, flammable, n.o.s	6.1	UN3275	I	6.1, 3	5	None	201	243	1 L	30 L	B	40
	.....	.....		II	6.1, 3	T14	None	202	243	5 L	60 L	B	40
	Nitriles, toxic, n.o.s	6.1	UN3276	I	6.1	5	None	201	243	1 L	30 L	B	
	.....	.....		II	6.1	T14	None	202	243	5 L	60 L	B	
	.....	.....		III	6.1	T7	153	203	241	60 L	220 L	A	
	Nitrites, inorganic, aqueous solution, n.o.s.	5.1	UN3219	II	5.1	T8	152	202	242	1 L	5 L	B	46, 56, 58
	.....	.....		III	5.1	T8	152	203	241	2.5 L	30 L	B	46, 56, 58
	Nitrites, inorganic, n.o.s	5.1	UN2627	II	5.1	33	152	212	None ..	5 kg	25 kg	A	46, 56, 58
	3-Nitro-4-chlorobenzotrifluoride	6.1	UN2307	II	6.1	T8	None	202	243	5 L	60 L	A	40
	6-Nitro-4-diazotoluene-3-sulfonic acid (dry).	Forbidden			.....		.....	.....	.....	.....	.....		
	Nitro isobutane triol trinitrate	Forbidden			.....		.....	.....	.....	.....	.....		
	N-Nitro-N-methylglycolamide nitrate	Forbidden			.....		.....	.....	.....	.....	.....		
	2-Nitro-2-methylpropanol nitrate	Forbidden			.....		.....	.....	.....	.....	.....		
	Nitro urea	1.1D	UN0147	II	1.1D ...		None	62	None ..	Forbidden	Forbidden	B	1E, 5E
	N-Nitroaniline	Forbidden			.....		.....	.....	.....	.....	.....		
	Nitroanilines *(o-; m-; p-;)*	6.1	UN1661	II	6.1	T14	None	212	242	25 kg	100 kg	A	
	Nitroanisole	6.1	UN2730	III	6.1	T8	153	213	240	100 kg	200 kg	A	
	Nitrobenzene	6.1	UN1662	II	6.1	T14	None	202	243	5 L	60 L	A	40
	m-Nitrobenzene diazonium perchlorate.	Forbidden			.....		.....	.....	.....	.....	.....		
	Nitrobenzenesulfonic acid	8	UN2305	II	8		154	202	242	1 L	30 L	A	
	Nitrobenzol, see Nitrobenzene	.....			.....		.....	.....	.....	.....	.....		
	5-Nitrobenzotriazol	1.1D	UN0385	II	1.1D ...		None	62	None ..	Forbidden	Forbidden	B	1E, 5E, 19E
	Nitrobenzotrifluorides	6.1	UN2306	II	6.1	T8	None	202	243	5 L	60 L	A	40
	Nitrobromobenzenes *liquid*	6.1	UN2732	III	6.1	T8, T38	153	203	241	60 L	220 L	A	
	Nitrobromobenzenes *solid*	6.1	UN2732	III	6.1		153	213	240	100 kg	200 kg	A	
	Nitrocellulose, *dry or wetted with less than 25 percent water (or alcohol), by mass.*	1.1D	UN0340	II	1.1D ...		None	62	None ..	Forbidden	Forbidden	B	4E, 27E
	Nitrocellulose membrane filters	4.1	UN3270	II	4.1	43, A1	151	212	240	1 kg	15 kg	D	

§172.101 HAZARDOUS MATERIALS TABLE—Continued

Symbols	Hazardous materials descriptions and proper shipping names	Hazard class or Division	Identification Numbers	PG	Label Codes	Special provisions	(8) Packaging (§173.***)			(9) Quantity limitations		(10) Vessel stowage	
							Exceptions	Nonbulk	Bulk	Passenger aircraft/rail	Cargo aircraft only	Location	Other
(1)	(2)	(3)	(4)	(5)	(6)	(7)	(8A)	(8B)	(8C)	(9A)	(9B)	(10A)	(10B)
	Nitrocellulose, plasticized *with not less than 18 percent plasticizing substance, by mass.*	1.3C	UN0343	II	1.3C ...		None	62	None ..	Forbidden	Forbidden	B	1E, 5E
	Nitrocellulose, solution, flammable *with not more than 12.6 percent nitrogen, by mass, and not more than 55 percent nitrocellulose.*	3	UN2059	II	3	T8, T31	150	202	242	5 L	60 L	B	
	.....	.....		III	3	B1, T7, T30	150	203	242	60 L	220 L	A	
	Nitrocellulose, *unmodified or plasticized with less than 18 percent plasticizing substance, by mass.*	1.1D	UN0341	II	1.1D ...		None	62	None ..	Forbidden	Forbidden	B	4E, 27E
	Nitrocellulose, wetted *with not less than 25 percent alcohol, by mass.*	1.3C	UN0342	II	1.3C ...		None	62	None ..	Forbidden	Forbidden	B	1E, 5E
	Nitrocellulose with alcohol *with not less than 25 percent alcohol by mass, and with not more than 12.6 percent nitrogen, by dry mass.*	4.1	UN2556	II	4.1		151	212	None ..	1 kg	15 kg	D	28
	Nitrocellulose, *with not more than 12.6 percent nitrogen, by dry mass, or* Nitrocellulose mixture with pigment *or* Nitrocellulose mixture with plasticizer *or* Nitrocellulose mixture with pigment and plasticizer.	4.1	UN2557	II	4.1	44	151	212	None ..	1 kg	15 kg	D	28
	Nitrocellulose with water *with not less than 25 percent water, by mass.*	4.1	UN2555	II	4.1		151	212	None ..	15 kg	50 kg	E	28
	Nitrochlorobenzene, see Chloronitrobenzenes *etc.*	.....			.....		.....	.....	.....	.....	.....		
	Nitrocresols	6.1	UN2446	III	6.1		153	213	240	100 kg	200 kg	A	
	Nitroethane	3	UN2842	III	3	B1, T8	150	203	242	60 L	220 L	A	
	Nitroethyl nitrate	Forbidden			.....		.....	.....	.....	.....	.....		
	Nitroethylene polymer	Forbidden			.....		.....	.....	.....	.....	.....		
	Nitrogen, compressed	2.2	UN1066		2.2		306	302	314, 315.	75 kg	150 kg	A	
	Nitrogen dioxide, see Dinitrogen tetroxide.	.....			.....		.....	.....	.....	.....	.....		
	Nitrogen fertilizer solution, see Fertilizer ammoniating solution *etc.*	.....			.....		.....	.....	.....	.....	.....		

	Nitrogen, mixtures with rare gases, see Rare gases and nitrogen mixtures.	.....			.....		.....	.....	.....	.....	.....		
	Nitrogen peroxide, see Dinitrogen tetroxide, liquefied.	.....			.....		.....	.....	.....	.....	.....		
	Nitrogen, refrigerated liquid *cryogenic liquid.*	2.2	UN1977		2.2		320	316	318	50 kg	500 kg	D	
	Nitrogen tetroxide and nitric oxide mixtures, see Nitric oxide and nitrogen tetroxide mixtures.	.....			.....		.....	.....	.....	.....	.....		
	Nitrogen tetroxide, see Dinitrogen tetroxide, liquefied.	.....			.....		.....	.....	.....	.....	.....		
	Nitrogen trichloride	Forbidden			.....		.....	.....	.....	.....	.....		
D	Nitrogen trifluoride, compressed	2.2	UN2451		2.2, 5.1.		None	302	None ..	Forbidden	25 kg	D	40
I	Nitrogen trifluoride, compressed	2.3	UN2451		2.3, 5.1.		None	302	None ..	Forbidden	25 kg	D	40
	Nitrogen triiodide	Forbidden			.....		.....	.....	.....	.....	.....		
	Nitrogen triiodide monoamine	Forbidden			.....		.....	.....	.....	.....	.....		
	Nitrogen trioxide	2.3	UN2421		2.3, 5.1, 8.	1	None	336	245	Forbidden	Forbidden	D	40, 89, 90
	Nitroglycerin, desensitized *with not less than 40 percent non-volatile water insoluble phlegmatizer, by mass.*	1.1D	UN0143	II	1.1D, 6.1.	125	None	62	None ..	Forbidden	Forbidden	B	1E, 4E, 21E
	Nitroglycerin, liquid, not desensitized	Forbidden			.....		.....	.....	.....	.....	.....		
	Nitroglycerin mixture *with more than 2 percent but not more than 10 percent nitroglycerin, by mass, desensitized.*	4.1	UN3319	.....	4.1	118	None	None ..	None ..	Forbidden	0.5 kg	E	.....
	Nitroglycerin, solution in alcohol, *with more than 1 percent but not more than 5 percent nitroglycerin.*	3	UN3064	II	3	N8	None	202	None ..	Forbidden	5 L	E	
	Nitroglycerin, solution in alcohol, *with more than 1 percent but not more than 10 percent nitrogylcerin.*	1.1D	UN0144	II	1.1D ...		None	62	None ..	Forbidden	Forbidden	B	1E, 5E, 21E
	Nitroglycerin solution in alcohol *with not more than 1 percent nitroglycerin.*	3	UN1204	II	3	N34, T25	None	202	None ..	5 L	60 L	B	
	Nitroguanidine nitrate	Forbidden			.....		.....	.....	.....	.....	.....		
	Nitroguanidine *or* Picrite, *dry or wetted with less than 20 percent water, by mass.*	1.1D	UN0282	II	1.1D ...		None	62	None ..	Forbidden	Forbidden	B	1E, 5E
	Nitroguanidine, wetted *or* Picrite, wetted *with not less than 20 percent water, by mass.*	4.1	UN1336	I	4.1	23, A8, A19, A20, N41	None	211	None ..	1 kg	15 kg	E	28
	1-Nitrohydantoin	Forbidden			.....		.....	.....	.....	.....	.....		

§172.101 HAZARDOUS MATERIALS TABLE—Continued

Symbols	Hazardous materials descriptions and proper shipping names	Hazard class or Division	Identification Numbers	PG	Label Codes	Special provisions	(8) Packaging (§173.***)			(9) Quantity limitations		(10) Vessel stowage	
							Exceptions	Non-bulk	Bulk	Passenger aircraft/rail	Cargo aircraft only	Location	Other
(1)	(2)	(3)	(4)	(5)	(6)	(7)	(8A)	(8B)	(8C)	(9A)	(9B)	(10A)	(10B)
	Nitrohydrochloric acid	8	UN1798	I	8	A3, B10, N41, T18, T27	None	201	243	Forbidden	2.5 L	D	40, 66, 74, 89, 90
	Nitromannite (dry)	Forbidden											
	Nitromannite, wetted, *see* Mannitol hexanitrate, *etc.*												
	Nitromethane	3	UN1261	II	3	T25	150	202	None	Forbidden	60 L	A	
	Nitromuriatic acid, see Nitrohydrochloric acid.												
	Nitronaphthalene	4.1	UN2538	III	4.1	A1	151	213	240	25 kg	100 kg	A	
	Nitrophenols *(o-; m-; p-;)*	6.1	UN1663	III	6.1	T8, T38	153	213	240	100 kg	200 kg	A	
	m-Nitrophenyldinitro methane	Forbidden											
	Nitropropanes	3	UN2608	III	3	B1, T1	150	203	242	60 L	220 L	A	
	p-Nitrosodimethylaniline	4.2	UN1369	II	4.2	A19, A20, B101, N34	None	212	241	15 kg	50 kg	D	34
	Nitrostarch, *dry or wetted with less than 20 percent water, by mass.*	1.1D	UN0146	II	1.1D		None	62	None	Forbidden	Forbidden	B	1E, 5E
	Nitrostarch, wetted *with not less than 20 percent water, by mass.*	4.1	UN1337	I	4.1	23, A8, A19, A20, N41	None	211	None	1 kg	15 kg	D	28
	Nitrosugars (dry)	Forbidden											
	Nitrosyl chloride	2.3	UN1069		2.3, 8	3, B14	None	304	314, 315.	Forbidden	Forbidden	D	40
	Nitrosylsulfuric acid	8	UN2308	II	8	A3, A6, A7, B2, N34, T9, T27	154	202	242	1 L	30 L	D	40, 66, 74, 89, 90
	Nitrotoluenes, *liquid o-; m-; p-;*	6.1	UN1664	II	6.1	T14	None	202	243	5 L	60 L	A	
	Nitrotoluenes, *solid m-, or p-*	6.1	UN1664	II	6.1	T14	None	212	242	25 kg	100 kg	A	
	Nitrotoluidines (mono)	6.1	UN2660	III	6.1		153	213	240	100 kg	200 kg	A	
	Nitrotriazolone *or* NTO	1.1D	UN0490	II	1.1D		None	62	None	Forbidden	Forbidden	B	1E, 5E
	Nitrous oxide and carbon dioxide mixtures, see Carbon dioxide and nitrous oxide mixtures.												
	Nitrous oxide	2.2	UN1070		2.2, 5.1.		306	304	314, 315.	75 kg	150 kg	A	40
	Nitrous oxide, refrigerated liquid	2.2	UN2201		2.2	B6	None	304	314, 315.	75 kg	150 kg	B	40
	Nitroxylenes, (o-; m-; p-)	6.1	UN1665	II	6.1	T14	None	202	243	5 L	60 L	A	
	Nitroxylol, see Nitroxylenes												
	Nonanes	3	UN1920	III	3	B1, T1	150	203	242	60 L	220 L	A	

Nonflammable gas, n.o.s., see Compressed *or* Liquefied gases, *etc. (UN 1955, UN 1956).*	.....			.....		.....	.....	.....	.....	.....		
Nonliquefied gases, see Compressed gases, *etc.*	.....			.....		.....	.....	.....	.....	.....		
Nonliquefied hydrocarbon gas, see Hydrocarbon gases, compressed, n.o.s.	.....			.....		.....	.....	.....	.....	.....		
Nonyltrichlorosilane	8	UN1799	II	8	A7, B2, B6, N34, T8, T26	None	202	242	Forbidden	30 L	C	40
2,5-Norbornadiene *or* Bicyclo[2,2,1]hepta-2,5-diene, inhibited.	3	UN2251	II	3		150	202	242	5 L	60 L	D	
Nordhausen acid, see Sulfuric acid, fuming *etc.*	.....			.....		.....	.....	.....	.....	.....		
Octadecyltrichlorosilane	8	UN1800	II	8	A7, B2, B6 N34, T8	None	202	242	Forbidden	30 L	C	40
Octadiene	3	UN2309	II	3	B1, T1	150	202	242	5 L	60 L	B	
1,7-Octadine-3,5-diyne-1,8-dimethoxy-9-octadecynoic acid.	Forbidden			.....		.....	.....	.....	.....	.....		
Octafluorobut-2-ene *or* Refrigerant gas R 1318.	2.2	UN2422		2.2		None	304	314, 315.	75 kg	150 kg	A	
Octafluorocyclobutane, *or* Refrigerant gas R C318.	2.2	UN1976		2.2		None	304	314, 315.	75 kg	150 kg	A	
Octafluoropropane*or* Refrigerant gas R 218.	2.2	UN2424		2.2		None	304	314, 315.	75 kg	150 kg	A	
Octanes	3	UN1262	II	3	T1	150	202	242	5 L	60 L	B	
Octogen, *see* Cyclotetramethylene tetranitramine, etc.	.....			.....		.....	.....	.....	.....	.....		
Octolite *or* Octol, *dry or wetted with less than 15 percent water, by mass.*	1.1D	UN0266	II	1.1D		None	62	None	Forbidden	Forbidden	B	1E, 5E
Octonal	1.1D	UN0496		1.1D		None	62	None	Forbidden	Forbidden	B	1E, 5E
Octyl aldehydes, *flammable*	3	UN1191	III	3	B1, T1	150	203	242	60 L	220 L	A	
Octyltrichlorosilane	8	UN1801	II	8	A7, B2, B6, N34, T8, T26	None	202	242	Forbidden	30 L	C	40
Oil gas, compressed	2.3	UN1071		2.3, 2.1.	6	None	304	314, 315.	Forbidden	25 kg	D	40
Oleum, see Sulfuric acid, fuming	.....			.....		.....	.....	.....	.....	.....		
Organic peroxide type A, liquid or solid.	Forbidden			.....		.....	.....	.....	.....	.....		
Organic peroxide type B, liquid	5.2	UN3101	II	5.2, 1	53	152	225	None	Forbidden	Forbidden	D	12, 40
Organic peroxide type B, liquid, temperature controlled.	5.2	UN3111	II	5.2, 1	53	None	225	None	Forbidden	Forbidden	D	2, 40
Organic peroxide type B, solid	5.2	UN3102	II	5.2, 1	53	152	225	None	Forbidden	Forbidden	D	12, 40
Organic peroxide type B, solid, temperature controlled.	5.2	UN3112	II	5.2, 1	53	None	225	None	Forbidden	Forbidden	D	2, 40
Organic peroxide type C, liquid	5.2	UN3103	II	5.1		152	225	None	5 L	10 L	D	12, 40
Organic peroxide type C, liquid, temperature controlled.	5.2	UN3113	II	5.2		None	225	None	Forbidden	Forbidden	D	2, 40

§172.101 HAZARDOUS MATERIALS TABLE—Continued

Symbols	Hazardous materials descriptions and proper shipping names	Hazard class or Division	Identification Numbers	PG	Label Codes	Special provisions	(8) Packaging (§173.***)			(9) Quantity limitations		(10) Vessel stowage	
							Exceptions	Nonbulk	Bulk	Passenger aircraft/rail	Cargo aircraft only	Location	Other
(1)	(2)	(3)	(4)	(5)	(6)	(7)	(8A)	(8B)	(8C)	(9A)	(9B)	(10A)	(10B)
	Organic peroxide type C, solid	5.2	UN3104	II	5.2		152	225	None	5 kg	10 kg	D	12, 40
	Organic peroxide type C, solid, temperature controlled.	5.2	UN3114	II	5.2		None	225	None	Forbidden	Forbidden	D	2, 40
	Organic peroxide type D, liquid	5.2	UN3105	II	5.2		152	225	None	5 L	10 L	D	12, 40
	Organic peroxide type D, liquid, temperature controlled.	5.2	UN3115	II	5.2		None	225	None	Forbidden	Forbidden	D	2, 40
	Organic peroxide type D, solid	5.2	UN3106	II	5.2		152	225	None	5 kg	10 kg	D	12, 40
	Organic peroxide type D, solid, temperature controlled.	5.2	UN3116	II	5.2		None	225	None	Forbidden	Forbidden	D	2, 40
	Organic peroxide type E, liquid	5.2	UN3107	II	5.2		152	225	None	10 L	25 L	D	12, 40
	Organic peroxide type E, liquid, temperature controlled.	5.2	UN3117	II	5.2		None	225	None	Forbidden	Forbidden	D	2, 40
	Organic peroxide type E, solid	5.2	UN3108	II	5.2		152	225	None	10 kg	25 kg	D	12, 40
	Organic peroxide type E, solid, temperature controlled.	5.2	UN3118	II	5.2		None	225	None	Forbidden	Forbidden	D	2, 40
	Organic peroxide type F, liquid	5.2	UN3109	II	5.2		152	225	225	10 L	25 L	D	12, 40
	Organic peroxide type F, liquid, temperature controlled.	5.2	UN3119	II	5.2		None	225	225	Forbidden	Forbidden	D	2, 40
	Organic peroxide type F, solid	5.2	UN3110	II	5.2	T42	152	225	225	10 kg	25 kg	D	12, 40
	Organic peroxide type F, solid, temperature controlled.	5.2	UN3120	II	5.2		None	225	225	Forbidden	Forbidden	D	2, 40
	.....	.....		III	6.1	B1, T14	153	203	242	60 L	220 L	A	40
D	Organic phosphate, mixed with compressed gas *or* Organic phosphate compound, mixed with compressed gas *or* Organic phosphorus compound, mixed with compressed gas.	2.3	NA1955		2.3	3	None	334	None	Forbidden	Forbidden	D	40
	Organic pigments, self-heating	4.2	UN3313	II	4.2	None	None	212	241	15 kg	50 kg	C	.....
	.....	.....		III	4.2	B101	None	213	241	25 kg	100 kg	C	.....
	Organoarsenic compound, n.o.s	6.1	UN3280	I	6.1	5	None	211	242	5 kg	50 kg	B	
	.....	.....		II	6.1	T14	None	212	242	25 kg	100 kg	B	
	.....	.....		III	6.1	T7	153	213	240	100 kg	200 kg	A	
	Organochlorine pesticides liquid, flammable, toxic, *flash point less than 23 degrees C.*	3	UN2762	I	3, 6.1		None	201	243	Forbidden	30 L	B	40
	.....	.....		II	3, 6.1		None	202	243	1 L	60 L	B	40
	Organochlorine pesticides, liquid, toxic.	6.1	UN2996	I	6.1	T42	None	201	243	1 L	30 L	B	40

.....	.....		II	6.1	T14	None	202	243	5 L	60 L	B	40
.....	.....		III	6.1	T14	153	203	241	60 L	220 L	A	40
Organochlorine pesticides, liquid, toxic, flammable, *flashpoint not less than 23 degrees C.*	6.1	UN2995	I	6.1, 3	T42	None	201	243	1 L	30 L	B	40
.....	.....		II	6.1, 3	T14	None	202	243	5 L	60 L	B	40
.....	.....		III	6.1	B1, T14	153	203	242	60 L	220 L	A	40
Organochlorine pesticides, solid toxic	6.1	UN2761	I	6.1		None	211	242	5 kg	50 kg	A	40
.....	.....		II	6.1		None	212	242	25 kg	100 kg	A	40
.....	.....		III	6.1		153	213	240	100 kg	200 kg	A	40
Organometallic compound *or* Compound solution *or* Compound dispersion, water-reactive, flammable, n.o.s.	4.3	UN3207	I	4.3, 3		None	201	244	Forbidden	1 L	E	40
.....	.....		II	4.3, 3		None	202	243	1 L	5 L	E	40
.....	.....		III	4.3, 3	B101, B106	None	203	242	5 L	60 L	E	40
Organometallic compound, toxic n.o.s.	6.1	UN3282	I	6.1	B106	None	211	242	5 kg	50 kg	B	
.....	.....		II	6.1	T14	None	212	242	25 kg	100 kg	B	
.....	.....		III	6.1	T7	153	213	240	100 kg	200 kg	A	
Organophosphorus compound, toxic, flammable, n.o.s.	6.1	UN3279	I	6.1, 3	5	None	201	243	1 L	30 L	B	40
.....	.....		II	6.1, 3	T14	None	202	243	5 L	60 L	B	40
Organophosphorus compound, toxic n.o.s.	6.1	UN3278	I	6.1	5	None	201	243	1 L	30 L	B	
.....	.....		II	6.1	T14	None	202	243	5 L	60 L	B	
.....	.....		III	6.1	T7	153	203	241	60 L	220 L	A	
Organophosphorus pesticides, liquid, flammable, toxic, *flash point less than 23 degrees C.*	3	UN2784	I	3, 6.1	T42	None	201	243	Forbidden	30 L	B	40
.....	.....		II	3, 6.1	T18	None	202	243	1 L	60 L	B	40
Organophosphorus pesticides, liquid, toxic.	6.1	UN3018	I	6.1	N76, T42	None	201	243	1 L	30 L	B	40
.....	.....		II	6.1	N76, T14	None	202	243	5 L	60 L	B	40
.....	.....		III	6.1	N76, T14	153	203	241	60 L	220 L	A	40
Organophosphorus pesticides, liquid, toxic, flammable, *flashpoint not less than 23 degrees C.*	6.1	UN3017	I	6.1, 3	N76, T42	None	201	243	1 L	30 L	B	40
.....	.....		II	6.1, 3	N76, T14	None	202	243	5 L	60 L	B	40
.....	.....		III	6.1, 3	B1, N76, T14	153	203	242	60 L	220 L	A	40
Organophosphorus pesticides, solid, toxic.	6.1	UN2783	I	6.1	N77	None	211	242	5 kg	50 kg	A	40
.....	.....		II	6.1	N77	None	212	242	25 kg	100 kg	A	40
.....	.....		III	6.1	N77	153	213	240	100 kg	200 kg	A	40
Organotin compounds, liquid, n.o.s ..	6.1	UN2788	I	6.1	A3, N33, N34, T42	None	201	243	1 L	30 L	B	40
.....	.....		II	6.1	A3, N33, N34, T14	None	202	243	5 L	60 L	A	40
.....	.....		III	6.1	T14	153	203	241	60 L	220 L	A	40
Organotin compounds, solid, n.o.s ...	6.1	UN3146	I	6.1	A5	None	211	242	5 kg	50 kg	B	40

§172.101 HAZARDOUS MATERIALS TABLE—Continued

Symbols	Hazardous materials descriptions and proper shipping names	Hazard class or Division	Identification Numbers	PG	Label Codes	Special provisions	(8) Packaging (§173.***)			(9) Quantity limitations		(10) Vessel stowage	
							Exceptions	Nonbulk	Bulk	Passenger aircraft/rail	Cargo aircraft only	Location	Other
(1)	(2)	(3)	(4)	(5)	(6)	(7)	(8A)	(8B)	(8C)	(9A)	(9B)	(10A)	(10B)
	.....	.....		II	6.1		None	212	242	25 kg	100 kg	A	40
	.....	.....		III	6.1		153	213	240	100 kg	200 kg	A	40
	Organotin pesticides, liquid, flammable, toxic, *flash point less than 23 degrees C.*	3	UN2787	I	3, 6.1		None	201	243	Forbidden	30 L	B	40
	.....	.....		II	3, 6.1		None	202	243	1 L	60 L	B	40
	Organotin pesticides, liquid, toxic	6.1	UN3020	I	6.1	T42	None	201	243	1 L	30 L	B	40
	.....	.....		II	6.1	T14	None	202	243	5 L	60 L	B	40
	.....	.....		III	6.1	T14	153	203	241	60 L	220 L	A	40
	Organotin pesticides, liquid, toxic, flammable, *flashpoint not less than 23 degrees C.*	6.1	UN3019	I	6.1, 3	T42	None	201	243	1 L	30 L	B	40
	.....	.....		II	6.1, 3	T14	None	202	243	5 L	60 L	B	40
	.....	.....		III	6.1, 3	B1, T14	153	203	242	60 L	220 L	A	40
	Organotin pesticides, solid, toxic	6.1	UN2786	I	6.1		None	211	242	5 kg	50 kg	A	40
	.....	.....		II	6.1		None	212	242	25 kg	100 kg	A	40
	.....	.....		III	6.1		153	213	240	100 kg	200 kg	A	40
	Orthonitroaniline, see Nitroanilines *etc.*	.....			.....		.....	.....	.....	.....	.....		
	Osmium tetroxide	6.1	UN2471	I	6.1	A8, B100, N33, N34	None	211	242	5 kg	50 kg	B	40
AD	Other regulated substances, liquid, n.o.s.	9	NA3082	III	9		155	203	241	No limit	No limit	A	
AD	Other regulated substances, solid, n.o.s.	9	NA3077	III	9	B54	155	213	240	No limit	No limit	A	
	Oxidizing liquid, corrosive, n.o.s	5.1	UN3098	I	5.1, 8		None	201	244	Forbidden	2.5 L	D	34, 56, 58, 69, 106
	.....	.....		II	5.1, 8		None	202	243	1 L	5 L	B	34, 56, 58, 69, 106
	.....	.....		III	5.1, 8		152	203	242	2.5 L	30 L	B	34, 56, 58, 69, 106
	Oxidizing liquid, n.o.s	5.1	UN3139	I	5.1	127, A2	None	201	243	Forbidden	2.5 L	D	56, 58, 69, 106

.....	.....		II	5.1	127, A2	152	202	242	1 L	5 L	B	56, 58, 69, 106
.....	.....		III	5.1	127, A2	152	203	241	2.5 L	30 L	B	56, 58, 69, 106
Oxidizing liquid, toxic, n.o.s	5.1	UN3099	I	5.1, 6.1.		None	201	244	Forbidden	2.5 L	D	56, 58, 95, 106
.....	.....		II	5.1, 6.1.		None	202	243	1 L	5 L	B	56, 58, 95, 106
.....	.....		III	5.1, 6.1.		152	203	242	2.5 L	30 L	B	56, 58, 95, 106
Oxidizing solid, corrosive, n.o.s	5.1	UN3085	I	5.1, 8		None	211	242	1 kg	15 kg	D	13, 34, 56, 58, 69, 106
.....	.....		II	5.1, 8		None	212	242	5 kg	25 kg	B	13, 34, 56, 58, 69, 106
.....	.....		III	5.1, 8		152	213	240	25 kg	100 kg	B	13, 34, 56, 58, 69, 106
Oxidizing solid, flammable, n.o.s	5.1	UN3137	I	5.1, 4.1.		None	214	214	Forbidden	Forbidden		
Oxidizing solid, n.o.s	5.1	UN1479	I	5.1		None	211	242	1 kg	15 kg	D	56, 58, 69, 106
.....	.....		II	5.1		152	212	240	5 kg	25 kg	B	56, 58, 69, 106
.....	.....		III	5.1		152	213	240	25 kg	100 kg	B	56, 58, 69, 106
Oxidizing solid, self-heating, n.o.s	5.1	UN3100	II	5.1, 4.2.		None	214	214	Forbidden	Forbidden		
Oxidizing solid, toxic, n.o.s	5.1	UN3087	I	5.1, 6.1.		None	211	242	1 kg	15 kg	D	56, 58, 69, 95, 106
.....	.....		II	5.1, 6.1.		None	212	242	5 kg	25 kg	B	56, 58, 69, 95, 106
.....	.....		III	5.1, 6.1.		152	213	240	25 kg	100 kg	B	56, 58, 69, 95, 106

§172.101 HAZARDOUS MATERIALS TABLE—Continued

Symbols	Hazardous materials descriptions and proper shipping names	Hazard class or Division	Identification Numbers	PG	Label Codes	Special provisions	(8) Packaging (§173.***)			(9) Quantity limitations		(10) Vessel stowage	
							Exceptions	Nonbulk	Bulk	Passenger aircraft/rail	Cargo aircraft only	Location	Other
(1)	(2)	(3)	(4)	(5)	(6)	(7)	(8A)	(8B)	(8C)	(9A)	(9B)	(10A)	(10B)
	Oxidizing solid, water-reactive, n.o.s	5.1	UN3121		5.1, 4.3.		None	214	214	Forbidden	Forbidden		
	Oxygen and carbon dioxide mixtures, see Carbon dioxide and oxygen mixtures.												
	Oxygen, compressed	2.2	UN1072		2.2, 5.1.		306	302	314, 315.	75 kg	150 kg	A	
	Oxygen difluoride, compressed	2.3	UN2190		2.3, 5.1, 8.	1	None	304	None	Forbidden	Forbidden	D	13, 40, 89, 90
	Oxygen generator, chemical	5.1	UN3356	II	5.1	60, A51	None	212	None	Forbidden	25 kg	D	56, 58, 69, 106
	Oxygen, mixtures with rare gases, see Rare gases and oxygen mixtures.												
	Oxygen, refrigerated liquid *(cryogenic liquid).*	2.2	UN1073		2.2, 5.1.		320	316	318	Forbidden	Forbidden	D	
	Paint *including paint, lacquer, enamel, stain, shellac solutions, varnish, polish, liquid filler, and liquid lacquer base.*	3	UN1263	I	3	T8, T31	150	201	243	1 L	30 L	E	
				II	3	B52, T7, T30	150	173	242	5 L	60 L	B	
				III	3	B1, B52, T7, T30	150	173	242	60 L	220 L	A	
	Paint *or* Paint related material	8	UN3066	II	8	B2, N71, T14	154	202	242	1 L	30 L	A	
				III	8	B52, N71, T7	154	203	241	5 L	60 L	A	
	Paint related material *including paint thinning, drying, removing, or reducing compound.*	3	UN1263	I	3	T8, T31	150	201	243	1 L	30 L	E	
				II	3	B52, T7, T30	150	173	242	5 L	60 L	B	
				III	3	B1, B52, T7, T30	150	173	242	60 L	220 L	A	
	Paper, unsaturated oil treated *incompletely dried (including carbon paper).*	4.2	UN1379	III	4.2	B101, B106	None	213	241	Forbidden	Forbidden	A	
	Paraformaldehyde	4.1	UN2213	III	4.1	A1	151	213	240	25 kg	100 kg	A	
	Paraldehyde	3	UN1264	III	3	B1, T1	150	203	242	60 L	220 L	A	
	Paranitroaniline, solid, see Nitroanilines *etc.*												
D	Parathion	6.1	NA2783	I	6.1	T42	None	201	243	Forbidden	1 L	A	40

	.....	.....		II	6.1	T14	None	202	243	Forbidden	5 L	A	40
D	Parathion and compressed gas mixture.	2.3	NA1967		2.3	3	None	334	245	Forbidden	Forbidden	E	40
	Paris green, solid, see Copper acetoarsenite.	.....			.....		.....	.....	.....	.....	.....		
A,W	PCB, *see* Polychlorinated biphenyls	.....			.....		.....	.....	.....	.....	.....		
+	Pentaborane	4.2	UN1380	I	4.2, 6.1.	1	None	205	245	Forbidden	Forbidden	D	
	Pentachloroethane	6.1	UN1669	II	6.1	T14	None	202	243	5 L	60 L	A	40
	Pentachlorophenol	6.1	UN3155	II	6.1		None	212	242	25 kg	100 kg	A	
	Pentaerythrite tetranitrate (dry)	Forbidden			.....		.....	.....	.....	.....	.....		
	Pentaerythrite tetranitrate *or* Pentaerythritol tetranitrate *or* PETN, *with not less than 7 percent wax by mass.*	1.1D	UN0411	II	1.1D ...		None	62	None ..	Forbidden	Forbidden	B	1E, 5E
	Pentaerythrite tetranitrate, wetted *or* Pentaerythritol tetranitrate, wetted, *or* PETN, wetted *with not less than 25 percent water, by mass, or* Pentaerythrite tetranitrate, *or* Pentaerythritol tetranitrate *or* PETN, desensitized *with not less than 15 percent phlegmatizer by mass.*	1.1D	UN0150	II	1.1D ...	121	None	62	None ..	Forbidden	Forbidden	B	1E, 5E
	Pentaerythritol tetranitrate, *see* Pentaerythrite tetranitrate, *etc.*	.....			.....		.....	.....	.....	.....	.....		
	Pentafluoroethane *or* Refrigerant gas R 125.	2.2	UN3220		2.2		306	304	314, 315.	75 kg	150 kg	A	
	Pentamethylheptane	3	UN2286	III	3	B1, T1	150	203	242	60 L	220 L	A	
	Pentane-2,4-dione	3	UN2310	III	3, 6.1	B1, T1	150	203	242	60 L	220 L	A	.....
	Pentanes	3	UN1265	I	3	T20	150	201	243	1 L	30 L	E	
	.....	.....		II	3	T20	150	202	242	5 L	60 L	E	
	Pentanitroaniline (dry)	Forbidden			.....		.....	.....	.....	.....	.....		
	1-Pentene (*n-amylene*)	3	UN1108	I	3	T14	150	201	243	1 L	30 1	E	.....
	1-Pentol	8	UN2705	II	8	B2, T8	154	202	242	1 L	30 L	B	38
	Pentolite, *dry or wetted with less than 15 percent water, by mass.*	1.1D	UN0151	II	1.1D ...		None	62	None ..	Forbidden	Forbidden	B	1E, 5E
	Perchlorates, inorganic, aqueous solution, n.o.s.	5.1	UN3211	II	5.1	T8	152	202	242	1 L	5 L	B	46, 56, 58
	.....	.....		III	5.1	T8	152	203	241	2.5 L	30 L	B	56, 58, 69, 106
	Perchlorates, inorganic, n.o.s	5.1	UN1481	II	5.1		152	212	242	5 kg	25 kg	A	46, 56
	.....	.....		III	5.1		152	213	240	25 kg	100 kg	A	46, 56
	Perchloric acid, with more than 72 percent acid by mass.	Forbidden			.....		.....	.....	.....	.....	.....		
	Perchloric acid *with more than 50 percent but not more than 72 percent acid, by mass.*	5.1	UN1873	I	5.1, 8	A2, A3, N41, T9, T27	None	201	243	Forbidden	2.5 L	D	66
	Perchloric acid *with not more than 50 percent acid by mass.*	8	UN1802	II	8, 5.1	N41, T9	None	202	243	Forbidden	30 L	C	66

§172.101 HAZARDOUS MATERIALS TABLE—Continued

Symbols	Hazardous materials descriptions and proper shipping names	Hazard class or Division	Identification Numbers	PG	Label Codes	Special provisions	(8) Packaging (§173.***)			(9) Quantity limitations		(10) Vessel stowage	
							Exceptions	Non-bulk	Bulk	Passenger aircraft/rail	Cargo aircraft only	Location	Other
(1)	(2)	(3)	(4)	(5)	(6)	(7)	(8A)	(8B)	(8C)	(9A)	(9B)	(10A)	(10B)
	Perchloroethylene, see Tetrachloroethylene.												
	Perchloromethyl mercaptan	6.1	UN1670	I	6.1	2, A3, A7, B9, B14, B32, B74, N34, T38, T43, T45	None	227	244	Forbidden	Forbidden	D	40
	Perchloryl fluoride	2.3	UN3083		2.3, 5.1.	2, B9, B14	None	302	314, 315.	Forbidden	Forbidden	D	40
	Percussion caps, see Primers, cap type.												
	Perfluoro-2-butene, see Octafluorobut-2-ene.												
	Perfluoro(ethyl vinyl ether)	2.1	UN3154		2.1		306	302, 304, 305.	314, 315.	Forbidden	150 kg	E	40
	Perfluoro(methyl vinyl ether)	2.1	UN3153		2.1		306	302, 304, 305.	314, 315.	Forbidden	150 kg	E	40
	Perfumery products *with flammable solvents.*	3	UN1266	II	3	T7, T30	150	202	242	15 L	60 L	B	
				III	3	B1, T7, T30	150	203	242	60 L	220 L	A	
	Permanganates, inorganic, aqueous solution, n.o.s.	5.1	UN3214	II	5.1	26, T8	152	202	242	1 L	5 L	D	56, 58, 69, 106, 107
	Permanganates, inorganic, n.o.s	5.1	UN1482	II	5.1	26, A30	152	212	242	5 kg	25 kg	D	56, 58, 69, 106, 107
				III	5.1	26, A30	152	213	240	25 kg	100 kg	D	56, 58, 69, 106, 107
	Peroxides, inorganic, n.o.s	5.1	UN1483	II	5.1	A7, A20, N34	None	212	242	5 kg	25 kg	A	13, 75, 106
				III	5.1	A7, A20, N34	152	213	240	25 kg	100 kg	A	13, 75, 106

	Peroxyacetic acid, with more than 43 percent and with more than 6 percent hydrogen peroxide.	Forbidden			.....		.....	.....	.....	.....	.....		
	Persulfates, inorganic, aqueous solution, n.o.s.	5.1	UN3216	III	5.1	T2	152	203	241	2.5 L	30 L	A	
	Persulfates, inorganic, n.o.s	5.1	UN3215	III	5.1		152	213	240	25 kg	100 kg	A	
	Pesticides, liquid, flammable, toxic, *flashpoint less than 23 degrees C.*	3	UN3021	I	3, 6.1	B5	None	201	243	Forbidden	30 L	B	
	.....	.....		II	3, 6.1		None	202	243	1 L	60 L	B	
	Pesticides, liquid, toxic, flammable, n.o.s. *flashpoint not less than 23 degrees C.*	6.1	UN2903	I	6.1, 3	T42	None	201	243	1 L	30 L	B	40
	.....	.....		II	6.1, 3	T14	None	202	243	5 L	60 L	B	40
	.....	.....		III	6.1, 3	B1, T14	153	203	242	60 L	220 L	A	40
	Pesticides, liquid, toxic, n.o.s	6.1	UN2902	I	6.1	T42	None	201	243	1 L	30 L	B	40
	.....	.....		II	6.1	T14	None	202	243	5 L	60 L	B	40
	.....	.....		III	6.1	T14	153	203	241	60 L	220 L	A	40
	Pesticides, solid, toxic, n.o.s	6.1	UN2588	I	6.1		None	211	242	5 kg	50 kg	A	40
	.....	.....		II	6.1		None	212	242	25 kg	100 kg	A	40
	.....	.....		III	6.1		153	213	240	100 kg	200 kg	A	40
	PETN, *see* Pentaerythrite tetranitrate	.....			.....		.....	.....	.....	.....	.....		
	PETN/TNT, *see* Pentolite, *etc*	.....			.....		.....	.....	.....	.....	.....		
	Petrol, *see* Gasoline	.....			.....		.....	.....	.....	.....	.....		
	Petroleum crude oil	3	UN1267	I	3	T8, T31	None	201	243	1 L	30 L	E	
	.....	.....		II	3	T8, T31	150	202	242	5 L	60 L	B	
	.....	.....		III	3	B1, T7, T30	150	203	242	60 L	220 L	A	
	Petroleum distillates, n.o.s. *or* Petroleum products, n.o.s.	3	UN1268	I	3	T8, T31	150	201	243	1 L	30 L	E	
	.....	.....		II	3	T8, T31	150	202	242	5 L	60 L	B	
	.....	.....		III	3	B1, T7, T30	150	203	242	60 L	220 L	A	
	Petroleum gases, liquefied *or* Liquefied petroleum gas.	2.1	UN1075		2.1		306	304	314, 315.	Forbidden	150 kg	E	40
D	Petroleum oil	3	NA1270	I	3	T8, T31	None	201	243	1 L	30 L	E	
	.....	.....		II	3	T8, T31	150	202	242	5 L	60 L	B	
	.....	.....		III	3	B1, T7, T30	150	203	242	60 L	220 L	A	
	Phenacyl bromide	6.1	UN2645	II	6.1	B106	None	212	242	25 kg	100 kg	B	40
	Phenetidines	6.1	UN2311	III	6.1	T7	153	203	241	60 L	220 L	A	
	Phenol, molten	6.1	UN2312	II	6.1	B14, B100, T8	None	202	243	Forbidden	Forbidden	B	40
+	Phenol, solid	6.1	UN1671	II	6.1	N78, T14	None	212	242	25 kg	100 kg	A	
	Phenol solutions	6.1	UN2821	II	6.1	T14	None	202	243	5 L	60 L	A	
	.....	.....		III	6.1	T7	153	203	241	60 L	220 L	A	
	Phenolsulfonic acid, liquid	8	UN1803	II	8	B2, N41, T8	154	202	242	1 L	30 L	C	14
	Phenoxy pesticides, liquid, flammable, toxic, *flash point less than 23 degrees C.*	3	UN2766	I	3, 6.1		None	201	243	Forbidden	30 L	B	40
	.....	.....		II	3, 6.1		None	202	243	1 L	60 L	B	40
	Phenoxy pesticides, liquid, toxic	6.1	UN3000	I	6.1	T42	None	201	243	1 L	30 L	B	40
	.....	.....		II	6.1	T14	None	202	243	5 L	60 L	B	40
	.....	.....		III	6.1	T14	153	203	241	60 L	220 L	A	40

§172.101 HAZARDOUS MATERIALS TABLE—Continued

Symbols	Hazardous materials descriptions and proper shipping names	Hazard class or Division	Identification Numbers	PG	Label Codes	Special provisions	(8) Packaging (§173.***)			(9) Quantity limitations		(10) Vessel stowage	
							Exceptions	Nonbulk	Bulk	Passenger aircraft/rail	Cargo aircraft only	Location	Other
(1)	(2)	(3)	(4)	(5)	(6)	(7)	(8A)	(8B)	(8C)	(9A)	(9B)	(10A)	(10B)
	Phenoxy pesticides, liquid, toxic, flammable, *flashpoint not less than 23 degrees C.*	6.1	UN2999	I	6.1, 3	T42	None	201	243	1 L	30 L	B	40
				II	6.1, 3	T14	None	202	243	5 L	60 L	B	40
				III	6.1, 3	B1, T14	153	203	242	60 L	220 L	A	40
	Phenoxy pesticides, solid, toxic	6.1	UN2765	I	6.1		None	211	242	5 kg	50 kg	A	40
				II	6.1		None	212	242	25 kg	100 kg	A	40
				III	6.1		153	213	240	100 kg	200 kg	A	40
	Phenyl chloroformate	6.1	UN2746	II	6.1, 8	T12	None	202	243	1 L	30 L	A	12, 13, 21, 25, 40, 100
	Phenyl isocyanate	6.1	UN2487	I	6.1,3	2, B9, B14, B32, B74, B77, N33, N34, T38, T43, T45	None	227	244	Forbidden	Forbidden	D	20, 40, 95
	Phenyl mercaptan	6.1	UN2337	I	6.1, 3	2, B9, B14, B32, B74, B77, T38, T43, T45	None	227	244	Forbidden	Forbidden	B	26, 40
	Phenyl phosphorus dichloride	8	UN2798	II	8	B2, B15, T8, T26	154	202	242	Forbidden	30 L	B	40
	Phenyl phosphorus thiodichloride	8	UN2799	II	8	B2, B15, T8, T26	154	202	242	Forbidden	30 L	B	40
	Phenyl urea pesticides, liquid, flammable, toxic, *flash point less than 23 degrees C.*	3	UN2768	I	3, 6.1		None	201	243	Forbidden	30 L	B	40
				II	3, 6.1		None	202	243	1 L	60 L	B	40
	Phenyl urea pesticides, liquid, toxic	6.1	UN3002	I	6.1	T42	None	201	243	1 L	30 L	B	40
				II	6.1	T14	None	202	243	5 L	60 L	B	40
				III	6.1	T14	153	203	241	60 L	220 L	A	40
	Phenyl urea pesticides, liquid, toxic, flammable, *flash point not less than 23 degrees C.*	6.1	UN3001	I	6.1, 3	T42	None	201	243	1 L	30 L	B	40
				II	6.1, 3	T14	None	202	243	5 L	60 L	B	40
				III	6.1, 3	B1, T14	153	203	242	60 L	220 L	A	40
	Phenyl urea pesticides, solid, toxic	6.1	UN2767	I	6.1		None	211	242	5 kg	50 kg	A	40
				II	6.1		None	212	242	25 kg	100 kg	A	40
				III	6.1		153	213	240	100 kg	200 kg	A	40
	Phenylacetonitrile, liquid	6.1	UN2470	III	6.1	T8	153	203	241	60 L	220 L	A	26
	Phenylacetyl chloride	8	UN2577	II	8	B2, T8, T26	154	202	242	1 L	30 L	C	40

	Phenylcarbylamine chloride	6.1	UN1672	I	6.1	2, B9, B14, B32, B74, T38, T43, T45	None	227	244	Forbidden	Forbidden	D	40
	m-Phenylene diaminediperchlorate (dry).	Forbidden											
	Phenylenediamines *(o-; m-; p-;)*	6.1	UN1673	III	6.1		153	213	240	100 kg	200 kg	A	
	Phenylhydrazine	6.1	UN2572	II	6.1	T8	None	202	243	5 L	60 L	A	40
	Phenylmercuric acetate	6.1	UN1674	II	6.1		None	212	242	25 kg	100 kg	A	
	Phenylmercuric compounds, n.o.s	6.1	UN2026	I	6.1		None	211	242	5 kg	50 kg	A	
				II	6.1		None	212	242	25 kg	100 kg	A	
				III	6.1		153	213	240	100 kg	200 kg	A	
	Phenylmercuric hydroxide	6.1	UN1894	II	6.1		None	212	242	25 kg	100 kg	A	
	Phenylmercuric nitrate	6.1	UN1895	II	6.1		None	212	242	25 kg	100 kg	A	
	Phenyltrichlorosilane	8	UN1804	II	8	A7, B6, N34, T8	None	202	242	Forbidden	30 L	C	40
	Phosgene	2.3	UN1076		2.3, 8	1, B7, B46	None	192	314	Forbidden	Forbidden	D	40
	9-Phosphabicyclononanes *or* Cyclooctadiene phosphines.	4.2	UN2940	II	4.2	A19	None	212	241	15 kg	50 kg	A	
	Phosphine	2.3	UN2199		2.3, 2.1.	1	None	192	245	Forbidden	Forbidden	D	40
	Phosphoric acid	8	UN1805	III	8	A7, N34, T7	154	203	241	5 L	60 L	A	
	Phosphoric acid triethyleneimine, see Tris-(1-aziridiyl)phosphine oxide, solution.												
	Phosphoric anhydride, see Phosphorus pentoxide.												
	Phosphorous acid	8	UN2834	III	8	T7	154	213	240	25 kg	100 kg	A	48
	Phosphorus, amorphous	4.1	UN1338	III	4.1	A1, A19, B1, B9, B26	None	213	243	25 kg	100 kg	A	74
	Phosphorus bromide, see Phosphorus tribromide.												
	Phosphorus chloride, see Phosphorus trichloride.												
	Phosphorus heptasulfide, *free from yellow or white phosphorus.*	4.1	UN1339	II	4.1	A20, N34	None	212	240	15 kg	50 kg	B	74
	Phosphorus oxybromide	8	UN1939	II	8	B8, B106, N41, N43	None	212	240	Forbidden	50 kg	C	12, 40
	Phosphorus oxybromide, molten	8	UN2576	II	8	B2, B8, N41, N43, T8, T27	None	202	242	Forbidden	Forbidden	C	40
+	Phosphorus oxychloride	8	UN1810	II	8, 6.1	2, A7, B9, B14, B32, B74, B77, N34, T38, T43, T45	None	227	244	Forbidden	30 L	C	40
	Phosphorus pentabromide	8	UN2691	II	8	A7, B106, N34	154	212	240	Forbidden	50 kg	B	12, 40
	Phosphorus pentachloride	8	UN1806	II	8	A7, B106, N34	None	212	240	Forbidden	50 kg	C	40
	Phosphorus pentafluoride, compressed.	2.3	UN2198		2.3, 8	2, B9, B14	None	302, 304.	314, 315.	Forbidden	Forbidden	D	40
	Phosphorus pentasulfide, *free from yellow or white phosphorus.*	4.3	UN1340	II	4.3, 4.1.	A20, B59, B101, B106	151	212	242	15 kg	50 kg	B	74
	Phosphorus pentoxide	8	UN1807	II	8	A7, N34	154	212	240	15 kg	50 kg	A	

§172.101 HAZARDOUS MATERIALS TABLE—Continued

Symbols	Hazardous materials descriptions and proper shipping names	Hazard class or Division	Identification Numbers	PG	Label Codes	Special provisions	(8) Packaging (§173.***)			(9) Quantity limitations		(10) Vessel stowage	
							Exceptions	Non-bulk	Bulk	Passenger aircraft/rail	Cargo aircraft only	Location	Other
(1)	(2)	(3)	(4)	(5)	(6)	(7)	(8A)	(8B)	(8C)	(9A)	(9B)	(10A)	(10B)
	Phosphorus sesquisulfide, *free from yellow or white phosphorus.*	4.1	UN1341	II	4.1	A20, N34	None	212	240	15 kg	50 kg	B	74
	Phosphorus tribromide	8	UN1808	II	8	A3, A6, A7, B2, B25, N34, N43, T8	None	202	242	Forbidden	30 L	C	40
	Phosphorus trichloride	6.1	UN1809	I	6.1, 8	2, B9, B14, B15, B32, B74, B77, N34, T38, T43, T45	None	227	244	Forbidden	Forbidden	C	40
	Phosphorus trioxide	8	UN2578	III	8		154	213	240	25 kg	100 kg	A	12
	Phosphorus trisulfide, *free from yellow or white phosphorus.*	4.1	UN1343	II	4.1	A20, N34	None	212	240	15 kg	50 kg	B	74
	Phosphorus, white dry *or* Phosphorus, white, under water *or* Phosphorus white, in solution *or* Phosphorus, yellow dry *or* Phosphorus, yellow, under water *or* Phosphorus, yellow, in solution.	4.2	UN1381	I	4.2, 6.1.	B9, B26, N34, T15, T26, T33	None	188	243	Forbidden	Forbidden	E	
	Phosphorus white, molten	4.2	UN2447	I	4.2, 6.1.	B9, B26, N34, T15, T26, T29	None	188	243	Forbidden	Forbidden	D	
	Phosphorus (white or red) and a chlorate, mixtures of.	Forbidden											
	Phosphoryl chloride, see Phosphorus oxychloride.												
	Phthalic anhydride *with more than .05 percent maleic anhydride.*	8	UN2214	III	8	T7	154	213	240	25 kg	100 kg	A	
	Phthalimide derivative pesticides, liquid, flammable, toxic, *flash point less than 23 degrees C.*	3	UN2774	I	3, 6.1		None	201	243	Forbidden	30 L	B	40
				II	3, 6.1		None	202	243	1 L	60 L	B	40
	Phthalimide derivative pesticides, liquid, toxic.	6.1	UN3008	I	6.1	T42	None	201	243	1 L	30 L	B	40
				II	6.1	T14	None	202	243	5 L	60 L	B	40
				III	6.1	T14	153	203	241	60 L	220 L	A	40
	Phthalimide derivative pesticides, liquid, toxic, flammable *flashpoint not less than 23 degrees C.*	6.1	UN3007	I	6.1, 3	T42	None	201	243	1 L	30 L	B	40
				II	6.1, 3	T14	None	202	243	5 L	60 L	B	40
				III	6.1, 3	T14	153	203	242	60 L	220 L	A	40

	Phthalimide derivative pesticides, solid, toxic.	6.1	UN2773	I	6.1		None	211	242	5 kg	50 kg	A	40
	.....	.....		II	6.1		None	212	242	25 kg	100 kg	A	40
	.....	.....		III	6.1		153	213	240	100 kg	200 kg	A	40
	Picolines	3	UN2313	III	3	B1, T8	150	203	242	60 L	220 L	A	40
	Picric acid, *see* Trinitrophenol, *etc*	.....			.....		.....	.....	.....	.....	.....		
D	Picric acid, wet, *with not less than 10 percent water.*	4.1	NA1344	I	4.1	A19, A20, N41	None	211	None	Forbidden	Forbidden	D	
	Picrite, *see* Nitroguanidine, *etc*	.....			.....		.....	.....	.....	.....	.....		
	Picryl chloride, *see* Trinitrochlorobenzene.	.....			.....		.....	.....	.....	.....	.....		
	Pine oil	3	UN1272	III	3	B1, T1	150	203	242	60 L	220 L	A	
	alpha-Pinene	3	UN2368	III	3	B1, T1	150	203	242	60 L	220 L	A	
	Piperazine	8	UN2579	III	8	T7	154	213	240	25 kg	100 kg	A	12
	Piperidine	3	UN2401	II	3, 8	T2	None	202	243	1 L	5 L	B	
	Pivaloyl chloride, see Trimethylacetyl chloride.	.....			.....		.....	.....	.....	.....	.....		
	Plastic molding compound *in dough, sheet or extruded rope form evolving flammable vapor.*	9	UN3314	III	9	32	155	213	None	100 kg	200 kg	A	85, 87
	Plastic solvent, n.o.s., see Flammable liquids, n.o.s.	.....			.....		.....	.....	.....	.....	.....		
	Plastics, nitrocellulose-based, self-heating, n.o.s.	4.2	UN2006	III	4.2		None	213	None	Forbidden	Forbidden	C	
	Poisonous gases, n.o.s., see Compressed *or* liquefied gases, flammable *or* toxic, n.o.s.	.....			.....		.....	.....	.....	.....	.....		
	Polyalkylamines, n.o.s., see Amines, *etc.*	.....			.....		.....	.....	.....	.....	.....		
AW	Polychlorinated biphenyls	9	UN2315	II	9	9, 81	155	202	241	100 L	220 L	A	34
	Polyester resin kit	3	UN3269		3	121	152	225	None	5 kg	5 kg	B	
	Polyhalogenated biphenyls, liquid *or* Polyhalogenated terphenyls liquid.	9	UN3151	II	9		155	204	241	100 L	220 L	A	34
	Polyhalogenated biphenyls, solid *or* Polyhalogenated terphenyls, solid.	9	UN3152	II	9		155	204	241	100 kg	200 kg	A	34
	Polymeric beads, expandable, *evolving flammable vapor.*	9	UN2211	III	None	32	155	221	240	100 kg	200 kg	A	85, 87
	Potassium	4.3	UN2257	I	4.3	A19, A20, B27, B100, N6, N34, T15, T26	None	211	244	Forbidden	15 kg	D	
	Potassium arsenate	6.1	UN1677	II	6.1		None	212	242	25 kg	100 kg	A	
	Potassium arsenite	6.1	UN1678	II	6.1		None	212	242	25 kg	100 kg	A	
	Potassium bisulfite solution, see Bisulfites, inorganic, aqueous solutions, n.o.s.	.....			.....		.....	.....	.....	.....	.....		
	Potassium borohydride	4.3	UN1870	I	4.3	A19, B100, N40	None	211	242	Forbidden	15 kg	E	
	Potassium bromate	5.1	UN1484	II	5.1		152	212	242	5 kg	25 kg	A	56, 58, 106
	Potassium carbonyl	Forbidden			.....		.....	.....	.....	.....	.....		

§172.101 HAZARDOUS MATERIALS TABLE—Continued

Symbols	Hazardous materials descriptions and proper shipping names	Hazard class or Division	Identification Numbers	PG	Label Codes	Special provisions	(8) Packaging (§173.***)			(9) Quantity limitations		(10) Vessel stowage	
							Exceptions	Non-bulk	Bulk	Passenger aircraft/rail	Cargo aircraft only	Location	Other
(1)	(2)	(3)	(4)	(5)	(6)	(7)	(8A)	(8B)	(8C)	(9A)	(9B)	(10A)	(10B)
	Potassium chlorate	5.1	UN1485	II	5.1	A9, N34	152	212	242	5 kg	25 kg	A	56, 58, 106
	Potassium chlorate, aqueous solution.	5.1	UN2427	II	5.1	A2, T8	152	202	241	1 L	5 L	B	56, 58, 106
				III	5.1	A2, T8	152	203	241	2.5 L	30 L	B	56, 58, 69, 106
	Potassium chlorate mixed with mineral oil, see Explosive, blasting, type C.												
	Potassium cuprocyanide	6.1	UN1679	II	6.1		None	212	242	25 kg	100 kg	A	26
	Potassium cyanide	6.1	UN1680	I	6.1	B69, B77, N74, N75, T18, T26	None	211	242	5 kg	50 kg	B	52
	Potassium dichloro isocyanurate or Potassium dichloro-s-triazinetrione, see Dichloroisocyanuric acid, dry or Dichloroisocyanuric acid salts *etc.*												
	Potassium dithionite *or* Potassium hydrosulfite.	4.2	UN1929	II	4.2	A8, A19, A20	None	212	241	15 kg	50 kg	E	13
	Potassium fluoride	6.1	UN1812	III	6.1	T8	153	213	240	100 kg	200 kg	A	26
	Potassium fluoroacetate	6.1	UN2628	I	6.1		None	211	242	5 kg	50 kg	E	
	Potassium fluorosilicate	6.1	UN2655	III	6.1		153	213	240	100 kg	200 kg	A	26
	Potassium hydrate, see Potassium hydroxide, solid.												
	Potassium hydrogen fluoride, see Potassium hydrogen difluoride.												
	Potassium hydrogen fluoride solution, see Corrosive liquid, n.o.s.												
	Potassium hydrogen sulfate	8	UN2509	II	8	A7, N34	154	212	240	15 kg	50 kg	A	
	Potassium hydrogendifluoride, *solid*	8	UN1811	II	8, 6.1	B106, N3, N34, T8	154	212	240	15 kg	50 kg	A	25, 26, 40
	Potassium hydrogendifluoride, *solution.*	8	UN1811	II	8, 6.1	N3, N34, T8	154	202	243	1 L	30 L	A	26, 40, 95
	Potassium hydrosulfite, *see* Potassium dithionite.												
	Potassium hydroxide, liquid, see Potassium hydroxide solution.												
	Potassium hydroxide, solid	8	UN1813	II	8		154	212	240	15 kg	50 kg	A	

Potassium hydroxide, solution	8	UN1814	II	8	B2, T8	154	202	242	1 L	30 L	A	
.....	.....		III	8	T7	154	203	241	5 L	60 L	A	
Potassium hypochlorite, solution, see Hypochlorite solutions, *etc.*	.....			.....		.....	.....	.....	.....	.....		
Potassium, metal alloys	4.3	UN1420	I	4.3	A19, A20, B27	None	211	244	Forbidden	15 kg	D	
Potassium metal, liquid alloy, see Alkali metal alloys, liquid.	.....			.....		.....	.....	.....	.....	.....		
Potassium metavanadate	6.1	UN2864	II	6.1		None	212	242	25 kg	100 kg	A	
Potassium monoxide	8	UN2033	II	8		154	212	240	15 kg	50 kg	A	
Potassium nitrate	5.1	UN1486	III	5.1	A1, A29	152	213	240	25 kg	100 kg	A	
Potassium nitrate and sodium nitrite mixtures.	5.1	UN1487	II	5.1	B78	152	212	240	5 kg	25 kg	A	56, 58
Potassium nitrite	5.1	UN1488	II	5.1		152	212	242	5 kg	25 kg	A	56, 58
Potassium perchlorate, solid	5.1	UN1489	II	5.1		152	212	242	5 kg	25 kg	A	56, 58, 106
Potassium perchlorate, solution	5.1	UN1489	II	5.1		152	202	242	1 L	5 L	A	56, 58, 106
Potassium permanganate	5.1	UN1490	II	5.1	.....	152	212	240	5 kg	25 kg	D	56, 58, 69, 106, 107
Potassium peroxide	5.1	UN1491	I	5.1	A20, N34	None	211	None	Forbidden	15 kg	B	13, 75, 106
Potassium persulfate	5.1	UN1492	III	5.1	A1, A29	152	213	240	25 kg	100 kg	A	
Potassium phosphide	4.3	UN2012	I	4.3, 6.1.	A19, N40	None	211	None	Forbidden	15 kg	E	40, 85
Potassium selenate, see Selenates *or* Selenites.	.....			.....		.....	.....	.....	.....	.....		
Potassium selenite, see Selenates *or* Selenites.	.....			.....		.....	.....	.....	.....	.....		
Potassium sodium alloys	4.3	UN1422	I	4.3	A19, B27, N34, N40, T15, T26	None	211	244	Forbidden	15 kg	D	
Potassium sulfide, anhydrous *or* Potassium sulfide *with less than 30 percent water of crystallization.*	4.2	UN1382	II	4.2	A19, A20, B16, B106, N34	None	212	241	15 kg	50 kg	A	
Potassium sulfide, hydrated *with not less than 30 percent water of crystallization.*	8	UN1847	II	8		154	212	240	15 kg	50 kg	A	26
Potassium superoxide	5.1	UN2466	I	5.1	A20	None	211	None	Forbidden	15 kg	B	13, 75, 106
Powder cake, wetted *or* Powder paste, wetted *with not less than 17 percent alcohol by mass.*	1.1C	UN0433	II	1.1C		None	62	None	Forbidden	Forbidden	B	1E, 5E
Powder cake, wetted *or* Powder paste, wetted *with not less than 25 percent water, by mass.*	1.3C	UN0159	II	1.3C		None	62	None	Forbidden	Forbidden	B	1E, 5E
Powder paste, *see* Powder cake, *etc*	.....			.....		.....	.....	.....	.....	.....		
Powder, smokeless	1.1C	UN0160	II	1.1C		None	62	None	Forbidden	Forbidden	B	10E, 26E

§172.101 HAZARDOUS MATERIALS TABLE—Continued

Symbols	Hazardous materials descriptions and proper shipping names	Hazard class or Division	Identification Numbers	PG	Label Codes	Special provisions	(8) Packaging (§173.***)			(9) Quantity limitations		(10) Vessel stowage	
							Exceptions	Nonbulk	Bulk	Passenger aircraft/rail	Cargo aircraft only	Location	Other
(1)	(2)	(3)	(4)	(5)	(6)	(7)	(8A)	(8B)	(8C)	(9A)	(9B)	(10A)	(10B)
	Powder, smokeless	1.3C	UN0161	II	1.3C		None	62	None	Forbidden	Forbidden	B	10E, 26E
	Power device, explosive, see Cartridges, power device.												
	Primers, cap type	1.4S	UN0044	II	None		None	62	None	25 kg	100 kg	A	
	Primers, cap type	1.1B	UN0377	II	1.1B		None	62	None	Forbidden	Forbidden	B	2E, 6E
	Primers, cap type	1.4B	UN0378	II	1.4B		None	62	None	Forbidden	75 kg	A	24E
	Primers, small arms, see Primers, cap type.												
	Primers, tubular	1.3G	UN0319	II	1.3G		None	62	None	Forbidden	Forbidden	B	
	Primers, tubular	1.4G	UN0320	II	1.4G		None	62	None	Forbidden	75 kg	A	24E
	Primers, tubular	1.4S	UN0376	II	None		None	62	None	25 kg	100 kg	A	
	Printing ink, *flammable*	3	UN1210	I	3	T8, T31	150	173	243	1 L	30 L	E	
				II	3	T7, T30	150	173	242	5 L	60 L	B	
				III	3	B1, T7, T30	150	173	242	60 L	220 L	A	
	Projectiles, illuminating, see Ammunition, illuminating, *etc.*												
	Projectiles, *inert with tracer*	1.4S	UN0345	II	1.4S			62	None	25 kg	100 kg	A	3E, 7E, 9E
	Projectiles, *inert, with tracer*	1.3G	UN0424	II	1.3G			62	None	Forbidden	Forbidden	B	3E, 7E
	Projectiles, *inert, with tracer*	1.4G	UN0425	II	1.4G			62	None	Forbidden	75 kg	A	3E, 7E, 24E
	Projectiles, *with burster or expelling charge.*	1.2D	UN0346	II	1.2D			62	None	Forbidden	Forbidden	B	3E, 7E
	Projectiles, *with burster or expelling charge.*	1.4D	UN0347	II	1.4D			62	None	Forbidden	75 kg	A	3E, 7E, 24E
	Projectiles, *with burster or expelling charge.*	1.2F	UN0426	II	1.2F			62	None	Forbidden	Forbidden	E	
	Projectiles, *with burster or expelling charge.*	1.4F	UN0427	II	1.4F			62	None	Forbidden	Forbidden	E	
	Projectiles, *with burster or expelling charge.*	1.2G	UN0434	II	1.2G			62	None	Forbidden	Forbidden	B	3E, 7E
	Projectiles, *with burster or expelling charge.*	1.4G	UN0435	II	1.4G			62	None	Forbidden	75 kg	A	3E, 7E, 24E
	Projectiles, *with bursting charge*	1.1F	UN0167	II	1.1F			62	None	Forbidden	Forbidden	E	
	Projectiles, *with bursting charge*	1.1D	UN0168	II	1.1D			62	None	Forbidden	Forbidden	B	3E, 7E
	Projectiles, *with bursting charge*	1.2D	UN0169	II	1.2D			62	None	Forbidden	Forbidden	B	3E, 7E
	Projectiles, *with bursting charge*	1.2F	UN0324	II	1.2F			62	None	Forbidden	Forbidden	E	

	Projectiles, *with bursting charge*	1.4D	UN0344	II	1.4D			62	None	Forbidden	75 kg	A	3E, 7E, 24E
	Propadiene, inhibited	2.1	UN2200		2.1		None	304	314, 315.	Forbidden	150 kg	B	40
	Propadiene mixed with methyl acetylene, see Methyl acetylene and propadiene mixtures, stabilized.												
	Propane *see also* Petroleum gases, liquefied.	2.1	UN1978		2.1	19	306	304	314, 315.	Forbidden	150 kg	E	40
	Propanethiols	3	UN2402	II	3	T8	150	202	242	5 L	60 L	E	95, 102
	n-Propanol *or* Propyl alcohol, normal	3	UN1274	II	3	B1, T1	150	202	242	5 L	60 L	B	
				III	3	B1, T1	150	203	242	60 L	220 L	A	
D	Propargyl alcohol	3	NA1986	II	3, 6.1		None	202	243	Forbidden	1 L	B	40
	Propellant, liquid	1.3C	UN0495	II	1.3C	37	None	62	None	Forbidden	Forbidden	B	
	Propellant, liquid	1.1C	UN0497	II	1.1C	37	None	62	None	Forbidden	Forbidden	B	
	Propellant, solid	1.1C	UN0498	II	1.1C		None	62	None	Forbidden	Forbidden	A	
	Propellant, solid	1.3C	UN0499	II	1.3C		None	62	None	Forbidden	Forbidden	A	
	Propionaldehyde	3	UN1275	II	3	T14	150	202	242	5 L	60 L	E	
	Propionic acid	8	UN1848	III	8	T7	154	203	241	5 L	60 L	A	
	Propionic anhydride	8	UN2496	III	8	T2	154	203	241	5 L	60 L	A	
	Propionitrile	3	UN2404	II	3, 6.1	T14	None	202	243	Forbidden	60 L	E	40
	Propionyl chloride	3	UN1815	II	3, 8	B100, T8, T26	None	202	243	1 L	5 L	B	40
	n-Propyl acetate	3	UN1276	II	3	T1	150	202	242	5 L	60 L	B	
	Propyl alcohol, *see* Propanol												
	n-Propyl benzene	3	UN2364	III	3	B1, T1	150	203	242	60 L	220 L	A	
	Propyl chloride	3	UN1278	II	3	N34, T14	None	202	242	Forbidden	60 L	E	
	n-Propyl chloroformate	6.1	UN2740	I	6.1, 3, 8.	2, A3, A6, A7, B9, B14, B32, B74, B77, N34, T38, T43, T45	None	227	244	Forbidden	2.5 L	B	21, 40, 100
	Propyl formates	3	UN1281	II	3	T8	150	202	242	5 L	60 L	B	
	n-Propyl isocyanate	6.1	UN2482	I	6.1, 3	1, A7, B9, B14, B30, B72, T38, T43, T44	None	226	244	Forbidden	Forbidden	D	40
	Propyl mercaptan, see Propanethiols												
	n-Propyl nitrate	3	UN1865	II	3	T25	150	202	None	5 L	60 L	D	
	Propylamine	3	UN1277	II	3, 8	N34, T14	None	202	243	1 L	5 L	E	40
	Propylene *see also* Petroleum gases, liquefied.	2.1	UN1077		2.1	19	306	304	314, 315.	Forbidden	150 kg	E	40
	Propylene chlorohydrin	6.1	UN2611	II	6.1, 3	T9	None	202	243	5 L	60 L	A	12, 40, 48
	Propylene oxide	3	UN1280	I	3	A3, N34, T20, T29	None	201	243	1 L	30 L	E	40
	Propylene tetramer	3	UN2850	III	3	B1, T1	150	203	242	60 L	220 L	A	
	1,2-Propylenediamine	8	UN2258	II	8, 3	A3, A6, N34, T8	None	202	243	1 L	30 L	A	40
	Propyleneimine, inhibited	3	UN1921	I	3	A3, N34, T25	None	201	243	1 L	30 L	B	40
	Propyltrichlorosilane	8	UN1816	II	8, 3	A7, B2, B6, N34, T8, T26	None	202	243	Forbidden	30 L	C	40
	Prussic acid, see Hydrogen cyanide												

§172.101 HAZARDOUS MATERIALS TABLE—Continued

Symbols	Hazardous materials descriptions and proper shipping names	Hazard class or Division	Identification Numbers	PG	Label Codes	Special provisions	(8) Packaging (§173.***)			(9) Quantity limitations		(10) Vessel stowage	
							Exceptions	Nonbulk	Bulk	Passenger aircraft/rail	Cargo aircraft only	Location	Other
(1)	(2)	(3)	(4)	(5)	(6)	(7)	(8A)	(8B)	(8C)	(9A)	(9B)	(10A)	(10B)
	Pyridine	3	UN1282	II	3	T8	None	202	242	5 L	60 L	B	21, 100
	Pyridine perchlorate	Forbidden											
	Pyrophoric liquid, inorganic, n.o.s	4.2	UN3194	I	4.2		None	181	244	Forbidden	Forbidden	D	18
	Pyrophoric liquids, organic, n.o.s	4.2	UN2845	I	4.2	B11, T42	None	181	244	Forbidden	Forbidden	D	18
	Pyrophoric metals, n.o.s., *or* Pyrophoric alloys, n.o.s.	4.2	UN1383	I	4.2	B11	None	187	242	Forbidden	Forbidden	D	
	Pyrophoric organometallic compound, n.o.s.	4.2	UN3203	I	4.2		None	187	242	Forbidden	Forbidden	D	
	Pyrophoric solid, inorganic, n.o.s	4.2	UN3200	I	4.2		None	187	242	Forbidden	Forbidden	D	
	Pyrophoric solids, organic, n.o.s	4.2	UN2846	I	4.2		None	187	242	Forbidden	Forbidden	D	
	Pyrosulfuryl chloride	8	UN1817	II	8	B2, T9, T27	154	202	242	1 L	30 L	C	40
	Pyroxylin solution or solvent, see Nitrocellulose.												
	Pyrrolidine	3	UN1922	II	3, 8	T1	None	202	243	1 L	5 L	B	40
	Quebrachitol pentanitrate	Forbidden											
	Quicklime, see Calcium oxide												
	Quinoline	6.1	UN2656	III	6.1	T8	153	203	241	60 L	220 L	A	12
	R 114, see Dichlorotetrafluoroethane												
	R 115, see Chloropentafluoroethane												
	R 116, see Hexafluoroethane												
	R 124, see Chlorotetrafluoroethane												
	R 133a, see Chlorotrifluoroethane												
	R 152a, see Difluoroethane												
	R 500, see Dichlorodifluoromethane and difluorethane, *etc.*												
	R 502, see Chlorodifluoromethane and chloropentafluoroethane mixture, *etc.*												
	R 503, see Chlorotrifluoromethane and trifluoromethane, *etc.*												
	R 12, see Dichlorodifluoromethane												
	R 12B1, see Chlorodifluorobromomethane.												
	R 13, see Chlorotrifluoromethane												
	R 13B1, see Bromotrifluoromethane												
	R 14, see Tetrafluoromethane												
	R 21, see Dichlorofluoromethane												
	R 22, see Chlorodifluoromethane												

Radioactive material, excepted package-articles manufactured from natural *or* depleted uranium or natural thorium.	7	UN2910	.....	None ..	.....	422, 426	422, 426.	422, 426.	.....	.....	A	
Radioactive material, excepted package-empty package *or* empty packaging.	7	UN2910	.....	empty	.....	428	428	428	.....	.....	A	.....
Radioactive material, excepted package-instruments *or* articles.	7	UN2910	.....	None ..	.....	422, 424	422, 424.	422, 424.	.....	.....	A	
Radioactive material, excepted package-limited quantity of material.	7	UN2910	.....	None ..	.....	421, 422	421, 422.	421, 422.	.....	.....	A	
Radioactive material, fissile, n.o.s	7	UN2918		7		453	417	417	.....	.....	A	40, 95
Radioactive material, low specific activity, n.o.s.*or* Radioactive material, LSA, n.o.s.	7	UN2912	.....	7	.....	421, 428	427	427	.....	.....	A	.....
Radioactive material, n.o.s	7	UN2982	.....	7	.....	421, 428	415, 416.	415, 416.	.....	.....	A	40, 95
Radioactive material, special form, n.o.s.	7	UN2974	.....	7	.....	421, 424	415, 416.	415, 416.	.....	.....	A	
Radioactive material, surface contaminated object *or* Radioactive material, SCO.	7	UN2913	.....	7	.....	421, 424, 426.	427	427	.....	.....	A	
Railway torpedo, see Signals, railway track, explosive.	.....			.....		.....	.....	.....	.....	.....		
Rare gases and nitrogen mixtures, compressed.	2.2	UN1981		2.2		306	302	None ..	75 kg	150 kg	A	
Rare gases and oxygen mixtures, compressed.	2.2	UN1980		2.2		306	302	None ..	75 kg	150 kg	A	
Rare gases mixtures, compressed ...	2.2	UN1979		2.2		306	302	None ..	75 kg	150 kg	A	
RC 318, see Octafluorocyclobutane	.....			.....		.....	.....	.....	.....	.....		
RDX and cyclotetramethylenetetranitramine, wetted *or* desensitized *see* RDX and HMX mixtures, wetted or desensitized.	.....			.....		.....	.....	.....	.....	.....		
RDX and HMX mixtures, wetted *with not less than 15 percent water by mass or* RDX and HMX mixtures, desensitized *with not less than 10 percent phlegmatizer by mass.*	1.1D	UN0391	II	1.1D ...		None	62	None ..	Forbidden	Forbidden	B	1E, 5E
RDX and Octogen mixtures, wetted *or* desensitized *see* RDX and HMX mixtures, wetted *or* desensitized *etc.*	.....			.....		.....	.....	.....	.....	.....		
RDX, see Cyclotrimethylene trinitramine, etc.	.....			.....		.....	.....	.....	.....	.....		
Receptacles, small, containing gas (gas cartridges) *flammable, without release device, not refillable and not exceeding 1 L capacity.*	2.1	UN2037		2.1		306	304	None ..	1 kg	15 kg	B	40

§172.101 HAZARDOUS MATERIALS TABLE—Continued

Symbols	Hazardous materials descriptions and proper shipping names	Hazard class or Division	Identification Numbers	PG	Label Codes	Special provisions	(8) Packaging (§173.***)			(9) Quantity limitations		(10) Vessel stowage	
							Exceptions	Non-bulk	Bulk	Passenger aircraft/rail	Cargo aircraft only	Location	Other
(1)	(2)	(3)	(4)	(5)	(6)	(7)	(8A)	(8B)	(8C)	(9A)	(9B)	(10A)	(10B)
	Receptacles, small, containing gas (gas cartridges) *non-flammable, without release device, not refillable and not exceeding 1 L capacity.*	2.2	UN2037		2.2		306	304	None	1 kg	15 kg	B	40
	Red phosphorus, see Phosphorus, amorphous.												
	Refrigerant gases, n.o.s	2.2	UN1078		2.2		306	304	314, 315.	75 kg	150 kg	A	
D	Refrigerant gases, n.o.s. *or* Dispersant gases, n.o.s.	2.1	NA1954		2.1		306	304	314, 315.	Forbidden	150 kg	D	40
D	Refrigerating machine	3	NA1993	III	3		174	174	None	10 L	10 L	A	
D	Refrigerating machines, *containing flammable, non-poisonous, liquefied gas.*	2.1	NA1954		2.1		306	306	306	Forbidden	25 kg	C	40
	Refrigerating machines, *containing non-flammable, non-toxic, liquefied gas or ammonia solution (UN2672).*	2.2	UN2857		2.2		306, 307	306	306, 307.	Forbidden	450 kg	A	
D	Regulated medical waste	6.2	UN3291	II	6.2	A13, A14	134	197	None	Forbidden	Forbidden	E	
	Release devices, explosive	1.4S	UN0173	II	1.4S		None	62	None	25 kg	100 kg	A	
	Resin solution, *flammable*	3	UN1866	I	3	B52, T8, T31	150	201	243	1 L	30 L	E	
				II	3	B52, T7, T30	150	173	242	5 L	60 L	B	
				III	3	B1, B52, T7, T30	150	173	242	60 L	220 L	A	
	Resorcinol	6.1	UN2876	III	6.1		153	213	240	100 kg	200 kg	A	
	Rifle grenade, see Grenades, *hand or rifle, etc.*												
	Rifle powder, see Powder, smokeless *(UN 0160).*												
	Rivets, explosive	1.4S	UN0174	II	1.4S		None	62	None	25 kg	100 kg	A	
	Road asphalt or tar liquid, see Tars, liquid, *etc.*												
	Rocket motors	1.3C	UN0186	II	1.3C	109	None	62	None	Forbidden	220 kg	B	
	Rocket motors	1.1C	UN0280	II	1.1C	109	None	62	None	Forbidden	Forbidden	B	
	Rocket motors	1.2C	UN0281	II	1.2C	109	None	62	None	Forbidden	Forbidden	B	
	Rocket motors, liquid fueled	1.2J	UN0395	II	1.2J	109	None	62	None	Forbidden	Forbidden	E	7E, 16E, 23E

Rocket motors, liquid fueled	1.3J	UN0396	II	1.3J	109	None	62	None	Forbidden	Forbidden	E	7E, 16E, 23E
Rocket motors with hypergolic liquids *with or without an expelling charge.*	1.3L	UN0250	II	1.3L	109	None	62	None	Forbidden	Forbidden	E	2E, 8E, 11E, 17E
Rocket motors with hypergolic liquids *with or without an expelling charge.*	1.2L	UN0322	II	1.2L	109	None	62	None	Forbidden	Forbidden	E	2E, 8E, 11E, 17E
Rockets, line-throwing	1.2G	UN0238	II	1.2G		None	62	None	Forbidden	Forbidden	B	
Rockets, line-throwing	1.3G	UN0240	II	1.3G		None	62	None	Forbidden	75 kg	B	
Rockets, line-throwing	1.4G	UN0453	II	1.4G		None	62	None	Forbidden	75 kg	A	24E
Rockets, liquid fueled *with bursting charge.*	1.1J	UN0397	II	1.1J		None	62	None	Forbidden	Forbidden	E	7E, 16E, 23E
Rockets, liquid fueled *with bursting charge.*	1.2J	UN0398	II	1.2J		None	62	None	Forbidden	Forbidden	E	7E, 16E, 23E
Rockets, *with bursting charge*	1.1F	UN0180	II	1.1F		None	62	None	Forbidden	Forbidden	E	
Rockets, *with bursting charge*	1.1E	UN0181	II	1.1E		None	62	None	Forbidden	Forbidden	B	
Rockets, *with bursting charge*	1.2E	UN0182	II	1.2E		None	62	None	Forbidden	Forbidden	B	
Rockets, *with bursting charge*	1.2F	UN0295	II	1.2F		None	62	None	Forbidden	Forbidden	E	
Rockets, *with expelling charge*	1.2C	UN0436	II	1.2C		None	62	None	Forbidden	Forbidden	B	
Rockets, *with expelling charge*	1.3C	UN0437	II	1.3C		None	62	None	Forbidden	Forbidden	B	
Rockets, *with expelling charge*	1.4C	UN0438	II	1.4C		None	62	None	Forbidden	75 kg	A	24E
Rockets, *with inert head*	1.3C	UN0183	II	1.3C		None	62	None	Forbidden	Forbidden	B	
Rosin oil	3	UN1286	II	3	T7	150	202	242	5 L	60 L	B	
			III	3	B1, T1	150	203	242	60 L	220 L	A	
Rubber solution	3	UN1287	II	3	T7, T30	150	202	242	5 L	60 L	B	
			III	3	B1, T7, T30	150	203	242	60 L	220 L	A	
Rubidium	4.3	UN1423	I	4.3	22, A7, A19, B100, N34, N40, N45	None	211	242	Forbidden	15 kg	D	
Rubidium hydroxide	8	UN2678	II	8	T8	154	212	240	15 kg	50 kg	A	
Rubidium hydroxide solution	8	UN2677	II	8	B2, T8	154	202	242	1 L	30 L	A	
			III	8	T7	154	203	241	5 L	60 L	A	
Safety fuse, see Fuse, safety												
Samples, explosive, *other than initiating explosives.*		UN0190	II		113	None	62	None	Forbidden	Forbidden	E	12E
Sand acid, see Fluorosilicic acid												
Seed cake, *containing vegetable oil solvent extractions and expelled seeds, with not more than 10 percent of oil and when the amount of moisture is higher than 11 percent, with not more than 20 percent of oil and moisture combined..*	4.2	UN1386	III	None	N7	None	213	241	Forbidden	Forbidden	A	13
I Seed cake *with more than 1.5 percent oil and not more than 11 percent moisture.*	4.2	UN1386	III	None	N7	None	213	241	Forbidden	Forbidden	E	13

§172.101 HAZARDOUS MATERIALS TABLE—Continued

Symbols	Hazardous materials descriptions and proper shipping names	Hazard class or Division	Identification Numbers	PG	Label Codes	Special provisions	(8) Packaging (§173.***)			(9) Quantity limitations		(10) Vessel stowage	
							Exceptions	Non-bulk	Bulk	Passenger aircraft/rail	Cargo aircraft only	Location	Other
(1)	(2)	(3)	(4)	(5)	(6)	(7)	(8A)	(8B)	(8C)	(9A)	(9B)	(10A)	(10B)
I	Seed cake *with not more than 1.5 percent oil and not more than 11 percent moisture.*	4.2	UN2217	III	None ..	N7	None	213	241	Forbidden	Forbidden	A	13
	Selenates *or* Selenites	6.1	UN2630	I	6.1		None	211	242	5 kg	50 kg	E	
	Selenic acid	8	UN1905	I	8	N34	None	211	242	Forbidden	25 kg	A	
	Selenium compound, n.o.s	6.1	UN3283	I	6.1		None	211	242	5 kg	50 kg	B	
	.....	.....		II	6.1	T14	None	212	242	25 kg	100 kg	B	
	.....	.....		III	6.1	T7	153	213	240	100 kg	200 kg	A	
	Selenium disulfide	6.1	UN2657	II	6.1		None	212	242	25 kg	100 kg	A	
	Selenium hexafluoride	2.3	UN2194		2.3, 8	1	None	302	None ..	Forbidden	Forbidden	D	40
	Selenium nitride	Forbidden			.....		.....	.....	.....	.....	.....		
D	Selenium oxide	6.1	NA2811	I	6.1		None	211	242	5 kg	50 kg	B	
	Selenium oxychloride	8	UN2879	I	8, 6.1	A3, A6, A7, N34, T12, T27	None	201	243	0.5 L	2.5 L	E	40
	Self-heating liquid, corrosive, inorganic, n.o.s.	4.2	UN3188	II	4.2, 8		None	202	243	1 L	5 L	C	
	.....	.....		III	4.2, 8		None	203	241	5 L	60 L	C	
	Self-heating liquid, corrosive, organic, n.o.s.	4.2	UN3185	II	4.2, 8		None	202	243	1 L	5 L	C	
	.....	.....		III	4.2, 8		None	203	241	5 L	60 L	C	
	Self-heating liquid, inorganic, n.o.s ...	4.2	UN3186	II	4.2		None	202	242	1 L	5 L	C	
	.....	.....		III	4.2		None	203	241	5 L	60 L	C	
	Self-heating liquid, organic, n.o.s	4.2	UN3183	II	4.2		None	202	242	1 L	5 L	C	
	.....	.....		III	4.2		None	203	241	5 L	60 L	C	
	Self-heating liquid, toxic, inorganic, n.o.s.	4.2	UN3187	II	4.2, 6.1.		None	202	243	1 L	5 L	C	
	.....	.....		III	4.2, 6.1.		None	203	241	5 L	60 L	C	
	Self-heating liquid, toxic, organic, n.o.s.	4.2	UN3184	II	4.2, 6.1.		None	202	243	1 L	5 L	C	
	.....	.....		III	4.2, 6.1.		None	203	241	5 L	60 L	C	
	Self-heating solid, corrosive, inorganic, n.o.s.	4.2	UN3192	II	4.2, 8		None	212	242	15 kg	50 kg	C	
	.....	.....		III	4.2, 8		None	213	242	25 kg	100 kg	C	
	Self-heating, solid, corrosive, organic, n.o.s.	4.2	UN3126	II	4.2, 8		None	212	242	15 kg	50 kg	C	
	.....	.....		III	4.2, 8		None	213	242	25 kg	100 kg	C	
	Self-heating solid, inorganic, n.o.s	4.2	UN3190	II	4.2		None	212	241	15 kg	50 kg	C	

.....	.....		III	4.2		None	213	241	25 kg	100 kg	C	
Self-heating, solid, organic, n.o.s	4.2	UN3088	II	4.2	B101	None	212	241	15 kg	50 kg	C	
.....	.....		III	4.2	B101	None	213	241	25 kg	100 kg	C	
Self-heating, solid, oxidizing, n.o.s ...	4.2	UN3127		4.2, 5.1.		None	214	214	Forbidden	Forbidden		
Self-heating solid, toxic, inorganic, n.o.s.	4.2	UN3191	II	4.2, 6.1.		None	212	242	15 kg	50 kg	C	
.....	.....		III	4.2, 6.1.		None	213	242	25 kg	100 kg	C	
Self-heating, solid, toxic, organic, n.o.s.	4.2	UN3128	II	4.2, 6.1.		None	212	242	15 kg	50 kg	C	
.....	.....		III	4.2, 6.1.		None	213	242	25 kg	100 kg	C	
Self-propelled vehicle, see Engines *or* Batteries *etc.*	.....			.....		.....	.....	.....	.....	.....		
Self-reactive liquid type B	4.1	UN3221	II	4.1	53	None	224	None ..	Forbidden	Forbidden	D	61
Self-reactive liquid type B, temperature controlled.	4.1	UN3231	II	4.1	53	None	224	None ..	Forbidden	Forbidden	D	2, 61
Self-reactive liquid type C	4.1	UN3223	II	4.1		None	224	None ..	5 L	10 L	D	61
Self-reactive liquid type C, temperature controlled.	4.1	UN3233	II	4.1		None	224	None ..	Forbidden	Forbidden	D	2, 61
Self-reactive liquid type D	4.1	UN3225	II	4.1		None	224	None ..	5 L	10 L	D	61
Self-reactive liquid type D, temperature controlled.	4.1	UN3235	II	4.1		None	224	None ..	Forbidden	Forbidden	D	2, 61
Self-reactive liquid type E	4.1	UN3227	II	4.1		None	224	None ..	10 L	25 L	D	61
Self-reactive liquid type E, temperature controlled.	4.1	UN3237	II	4.1		None	224	None ..	Forbidden	Forbidden	D	2, 61
Self-reactive liquid type F	4.1	UN3229	II	4.1		None	224	None ..	10 L	25 L	D	61
Self-reactive liquid type F, temperature controlled.	4.1	UN3239	II	4.1		None	224	None ..	Forbidden	Forbidden	D	2, 61
Self-reactive solid type B	4.1	UN3222	II	4.1	53	None	224	None ..	Forbidden	Forbidden	D	61
Self-reactive solid type B, temperature controlled.	4.1	UN3232	II	4.1	53	None	224	None ..	Forbidden	Forbidden	D	2, 61
Self-reactive solid type C	4.1	UN3224	II	4.1		None	224	None ..	5 kg	10 kg	D	61
Self-reactive solid type C, temperature controlled.	4.1	UN3234	II	4.1		None	224	None ..	Forbidden	Forbidden	D	2, 61
Self-reactive solid type D	4.1	UN3226	II	4.1		None	224	None ..	5 kg	10 kg	D	61
Self-reactive solid type D, temperature controlled.	4.1	UN3236	II	4.1		None	224	None ..	Forbidden	Forbidden	D	2, 61
Self-reactive solid type E	4.1	UN3228	II	4.1		None	224	None ..	10 kg	25 kg	D	61
Self-reactive solid type E, temperature controlled.	4.1	UN3238	II	4.1		None	224	None ..	Forbidden	Forbidden	D	2, 61
Self-reactive solid type F	4.1	UN3230	II	4.1		None	224	None ..	10 kg	25 kg	D	61
Self-reactive solid type F, temperature controlled.	4.1	UN3240	II	4.1		None	224	None ..	Forbidden	Forbidden	D	2, 61
Shale oil	3	UN1288	I	3	T7	None	201	243	1 L	30 L	B	
.....	.....		II	3	T7, T30	150	202	242	5 L	60 L	B	
.....	.....		III	3	B1, T7, T30	150	203	242	60 L	220 L	A	
Shaped charges, commercial, see Charges, shaped, commercial *etc.*	.....			.....		.....	.....	.....	.....	.....		

§172.101 HAZARDOUS MATERIALS TABLE—Continued

Symbols	Hazardous materials descriptions and proper shipping names	Hazard class or Division	Identification Numbers	PG	Label Codes	Special provisions	(8) Packaging (§173.***)			(9) Quantity limitations		(10) Vessel stowage	
							Exceptions	Nonbulk	Bulk	Passenger aircraft/rail	Cargo aircraft only	Location	Other
(1)	(2)	(3)	(4)	(5)	(6)	(7)	(8A)	(8B)	(8C)	(9A)	(9B)	(10A)	(10B)
	Signal devices, hand	1.4G	UN0191	II	1.4G		None	62	None	Forbidden	75 kg	A	24E
	Signal devices, hand	1.4S	UN0373	II	1.4S		None	62	None	25 kg	100 kg	A	
	Signals, distress, *ship*	1.1G	UN0194	II	1.1G		None	62	None	Forbidden	Forbidden	B	
	Signals, distress, *ship*	1.3G	UN0195	II	1.3G		None	62	None	Forbidden	75 kg	B	
	Signals, highway, see Signal devices, hand; Fireworks, type D.												
	Signals, railway track, explosive	1.1G	UN0192	II	1.1G		None	62	None	Forbidden	Forbidden	B	
	Signals, railway track, explosive	1.4S	UN0193	II	1.4S		None	62	None	25 kg	100 kg	A	
	Signals, railway track, explosive	1.3G	UN0492		1.3G		None	62	None	Forbidden	Forbidden	E	1E, 8E
	Signals, railway track, explosive	1.4G	UN0493		1.4G		None	62	None	Forbidden	75 kg	A	24E
	Signals, ship distress, water-activated, see Contrivances, water-activated, *etc.*												
	Signals, smoke	1.1G	UN0196	II	1.1G		None	62	None	Forbidden	Forbidden	B	
	Signals, smoke	1.4G	UN0197	II	1.4G		None	62	None	Forbidden	75 kg	A	24E
	Signals, smoke	1.2G	UN0313	II	1.2G		None	62	None	Forbidden	Forbidden	B	
	Signals, smoke	1.3G	UN0487	II	1.3G		None	62	None	Forbidden	Forbidden	B	
	Silane, compressed	2.1	UN2203		2.1		None	302	None	Forbidden	Forbidden	E	40, 57, 104
	Silicofluoric acid, see Fluorosilicic acid.												
	Silicon chloride, see Silicon tetrachloride.												
	Silicon powder, amorphous	4.1	UN1346	III	4.1	A1	None	213	240	25 kg	100 kg	A	
	Silicon tetrachloride	8	UN1818	II	8	A3, A6, B2, B6, T18, T26, T29	154	202	242	1 L	30 L	C	40
	Silicon tetrafluoride, compressed	2.3	UN1859		2.3, 8	2	None	302	None	Forbidden	Forbidden	D	40
	Silver acetylide (dry)	Forbidden											
	Silver arsenite	6.1	UN1683	II	6.1		None	212	242	25 kg	100 kg	A	
	Silver azide (dry)	Forbidden											
	Silver chlorite (dry)	Forbidden											
	Silver cyanide	6.1	UN1684	II	6.1		None	212	242	25 kg	100 kg	A	26, 40
	Silver fulminate (dry)	Forbidden											
	Silver nitrate	5.1	UN1493	II	5.1		152	212	242	5 kg	25 kg	A	
	Silver oxalate (dry)	Forbidden											
	Silver picrate (dry)	Forbidden											
	Silver picrate, wetted *with not less than 30 percent water, by mass.*	4.1	UN1347	I	4.1		None	211	None	Forbidden	Forbidden	D	28, 36

	Sludge, acid	8	UN1906	II	8	A3, A7, B2, N34, T9, T27	None	202	242	Forbidden	30 L	C	14
D	Smokeless powder for small arms (*100 pounds or less.*	4.1	NA3178	I	4.1	16	None	171	None	Forbidden	7.3 kg	A	
	Soda lime *with more than 4 percent sodium hydroxide.*	8	UN1907	III	8		154	213	240	25 kg	100 kg	A	
	Sodium	4.3	UN1428	I	4.3	A7, A8, A19, A20, B9, B48, B68, N34, T15, T29, T46	None	211	244	Forbidden	15 kg	D	
	Sodium aluminate, solid	8	UN2812	III	8		154	213	240	25 kg	100 kg	A	
	Sodium aluminate, solution	8	UN1819	II	8	B2, T8	154	202	242	1 L	30 L	A	
				III	8	T7	154	203	241	5 L	60 L	A	
	Sodium aluminum hydride	4.3	UN2835	II	4.3	A8, A19, A20, B100	151	212	242	Forbidden	50 kg	E	
	Sodium ammonium vanadate	6.1	UN2863	II	6.1		None	212	242	25 kg	100 kg	A	
	Sodium arsanilate	6.1	UN2473	III	6.1		153	213	240	100 kg	200 kg	A	
	Sodium arsenate	6.1	UN1685	II	6.1		None	212	242	25 kg	100 kg	A	
	Sodium arsenite, aqueous solutions	6.1	UN1686	II	6.1	T15	None	202	243	5 L	60 L	A	
				III	6.1	T15	153	203	241	60 L	220 L	A	
	Sodium arsenite, solid	6.1	UN2027	II	6.1		None	212	242	25 kg	100 kg	A	
	Sodium azide	6.1	UN1687	II	6.1	B28	None	212	242	25 kg	100 kg	A	36, 52, 91
	Sodium bifluoride, see Sodium hydrogendifluoride.												
	Sodium bisulfite, solution, see Bisulfites, aqueous solutions, n.o.s.												
	Sodium borohydride	4.3	UN1426	I	4.3	B100, N40	None	211	242	Forbidden	15 kg	E	
	Sodium borohydride and sodium hydroxide solution, *with not more than 12 percent sodium borohydride and not more than 40 percent sodium hydroxide by mass.*	8	UN3320	II	8	B2, N34, T8	154	202	242	1 L	30 L	A	26
				III	8	B2, N34, T7	154	203	241	5 L	60 L	A	
	Sodium bromate	5.1	UN1494	II	5.1		152	212	242	5 kg	25 kg	A	56, 58, 106
	Sodium cacodylate	6.1	UN1688	II	6.1		None	212	242	25 kg	100 kg	A	26
	Sodium chlorate	5.1	UN1495	II	5.1	A9, N34, T8	152	212	240	5 kg	25 kg	A	56, 58, 106
	Sodium chlorate, aqueous solution	5.1	UN2428	II	5.1	A2, B6, T8	152	202	241	1 L	5 L	B	56, 58, 106
				III	5.1	A2, T8	152	203	241	2.5 L	30 L	B	56, 58, 69, 106
	Sodium chlorate mixed with dinitrotoluene, see Explosive blasting, type C.												
	Sodium chlorite	5.1	UN1496	II	5.1	A9, N34, T8	None	212	242	5 kg	25 kg	A	56, 58, 106
	Sodium chloroacetate	6.1	UN2659	III	6.1		153	213	240	100 kg	200 kg	A	

§172.101 HAZARDOUS MATERIALS TABLE—Continued

Symbols	Hazardous materials descriptions and proper shipping names	Hazard class or Division	Identification Numbers	PG	Label Codes	Special provisions	(8) Packaging (§173.***)			(9) Quantity limitations		(10) Vessel stowage	
							Exceptions	Nonbulk	Bulk	Passenger aircraft/rail	Cargo aircraft only	Location	Other
(1)	(2)	(3)	(4)	(5)	(6)	(7)	(8A)	(8B)	(8C)	(9A)	(9B)	(10A)	(10B)
	Sodium cuprocyanide, solid	6.1	UN2316	I	6.1		None	211	242	5 kg	50 kg	A	26
	Sodium cuprocyanide, solution	6.1	UN2317	I	6.1	T8, T26	None	201	243	1 L	30 L	B	26, 40
	Sodium cyanide	6.1	UN1689	I	6.1	B69, B77, N74, N75, T42	None	211	242	5 kg	50 kg	B	52
	Sodium dichloroisocyanurate or Sodium dichloro-s-triazinetrione, see Dichloroisocyanuric acid *etc.*												
	Sodium dinitro-o-cresolate, *dry or wetted with less than 15 percent water, by mass.*	1.3C	UN0234	II	1.3C		None	62	None	Forbidden	Forbidden	B	1E, 5E
	Sodium dinitro-o-cresolate, wetted *with not less than 15 percent water, by mass.*	4.1	UN1348	I	4.1, 6.1.	23, A8, A19, A20, N41	None	211	None	1 kg	15 kg	E	28, 36
	Sodium dithionite *or* Sodium hydrosulfite.	4.2	UN1384	II	4.2	A19, A20, B106	None	212	241	15 kg	50 kg	E	13
	Sodium fluoride	6.1	UN1690	III	6.1	T8	153	213	240	100 kg	200 kg	A	26
	Sodium fluoroacetate	6.1	UN2629	I	6.1		None	211	242	5 kg	50 kg	E	
	Sodium fluorosilicate	6.1	UN2674	III	6.1		153	213	240	100 kg	200 kg	A	26
	Sodium hydrate, see Sodium hydroxide, solid.												
	Sodium hydride	4.3	UN1427	I	4.3	A19, B100, N40	None	211	242	Forbidden	15 kg	E	
	Sodium hydrogendifluoride, solid	8	UN2439	II	8	B106, N3, N34	154	212	240	15 kg	50 kg	A	12, 25, 26, 40
	Sodium hydrogendifluoride *solution*	8	UN2439	II	8	N3, N34	154	202	242	1 L	30 L	A	12, 25, 26, 40
D	Sodium hydrosulfide, solution	8	NA2922	II	8, 6.1	B2	154	202	243	1 L	30 L	B	40, 95
	Sodium hydrosulfide, *with less than 25 percent water of crystallization.*	4.2	UN2318	II	4.2	A7, A19, A20	None	212	241	15 kg	50 kg	A	
	Sodium hydrosulfide *with not less than 25 percent water of crystallization.*	8	UN2949	II	8	A7	154	212	240	15 kg	50 kg	A	26
	Sodium hydrosulfite, *see* Sodium dithionite.												
	Sodium hydroxide, solid	8	UN1823	II	8		154	212	240	15 kg	50 kg	A	
	Sodium hydroxide solution	8	UN1824	II	8	B2, N34, T8	154	202	242	1 L	30 L	A	
				III	8	N34, T7	154	203	241	5 L	60 L	A	
	Sodium hypochlorite, solution, see Hypochlorite solutions *etc.*												

	Sodium metal, liquid alloy, see Alkali metal alloys, liquid, n.o.s.	.....			.....		.....	.....	.....	.....	.....		
	Sodium methylate	4.2	UN1431	II	4.2, 8	A19	None	212	242	15 kg	50 kg	B	
	Sodium methylate solutions *in alcohol.*	3	UN1289	II	3, 8	T8, T31	None	202	243	1 L	5 L	B	
	.....	.....		III	3, 8	B1, T7, T30	150	203	242	5 L	60 L	A	
	Sodium monoxide	8	UN1825	II	8		154	212	240	15 kg	50 kg	A	
	Sodium nitrate	5.1	UN1498	III	5.1	A1, A29	152	213	240	25 kg	100 kg	A	
	Sodium nitrate and potassium nitrate mixtures.	5.1	UN1499	III	5.1	A1, A29	152	213	240	25 kg	100 kg	A	
	Sodium nitrite	5.1	UN1500	III	5.1	A1, A29	152	213	240	25 kg	100 kg	A	56, 58
	Sodium pentachlorophenate	6.1	UN2567	II	6.1		None	212	242	25 kg	100 kg	A	
	Sodium perchlorate	5.1	UN1502	II	5.1		152	212	242	5 kg	25 kg	A	56, 58, 106
	Sodium permanganate	5.1	UN1503	II	5.1		152	212	242	5 kg	25 kg	D	56, 58, 69, 106, 107
	Sodium peroxide	5.1	UN1504	I	5.1	A20, N34	None	211	None	Forbidden	15 kg	B	13, 75, 106
	Sodium peroxoborate, anhydrous	5.1	UN3247	II	5.1		152	212	240	5 kg	25 kg	A	13, 25, 106
	Sodium persulfate	5.1	UN1505	III	5.1	A1	152	213	240	25 kg	100 kg	A	
	Sodium phosphide	4.3	UN1432	I	4.3, 6.1.	A19, N40	None	211	None	Forbidden	15 kg	E	40, 85
	Sodium picramate, *dry or wetted with less than 20 percent water, by mass.*	1.3C	UN0235	II	1.3C		None	62	None	Forbidden	Forbidden	B	1E, 5E
	Sodium picramate, wetted *with not less than 20 percent water, by mass.*	4.1	UN1349	I	4.1	23, A8, A19, N41	None	211	None	Forbidden	15 kg	E	28, 36
	Sodium picryl peroxide	Forbidden			.....		.....	.....	.....	.....	.....		
	Sodium potassium alloys, see Potassium sodium alloys.	.....			.....		.....	.....	.....	.....	.....		
	Sodium selenate, see Selenates *or* Selenites.	.....			.....		.....	.....	.....	.....	.....		
D	Sodium selenite	6.1	NA2630	II	6.1		None	212	242	25 kg	100 kg	E	
	Sodium sulfide, anhydrous *or* Sodium sulfide *with less than 30 percent water of crystallization.*	4.2	UN1385	II	4.2	A19, A20, B106, N34	None	212	241	15 kg	50 kg	A	
	Sodium sulfide, hydrated *with not less than30 percent water.*	8	UN1849	II	8	T8	154	212	240	15 kg	50 kg	A	26
	Sodium superoxide	5.1	UN2547	I	5.1	A20, N34	None	211	None	Forbidden	15 kg	E	13, 75, 106
	Sodium tetranitride	Forbidden			.....		.....	.....	.....	.....	.....		
	Solids containing corrosive liquid, n.o.s.	8	UN3244	II	8	49	154	212	240	15 kg	50 kg	B	40
	Solids containing flammable liquid, n.o.s.	4.1	UN3175	II	4.1	47	151	212	240	15 kg	50 kg	B	
	Solids containing toxic liquid, n.o.s	6.1	UN3243	II	6.1	48	None	212	240	25 kg	100 kg	B	40

§172.101 HAZARDOUS MATERIALS TABLE—Continued

Symbols	Hazardous materials descriptions and proper shipping names	Hazard class or Division	Identification Numbers	PG	Label Codes	Special provisions	(8) Packaging (§173.***)			(9) Quantity limitations		(10) Vessel stowage	
							Exceptions	Nonbulk	Bulk	Passenger aircraft/rail	Cargo aircraft only	Location	Other
(1)	(2)	(3)	(4)	(5)	(6)	(7)	(8A)	(8B)	(8C)	(9A)	(9B)	(10A)	(10B)
	Sounding devices, explosive	1.2F	UN0204	II	1.2F		None	62	None	Forbidden	Forbidden	E	
	Sounding devices, explosive	1.1F	UN0296	II	1.1F		None	62	None	Forbidden	Forbidden	E	
	Sounding devices, explosive	1.1D	UN0374	II	1.1D		None	62	None	Forbidden	Forbidden	B	
	Sounding devices, explosive	1.2D	UN0375	II	1.2D		None	62	None	Forbidden	Forbidden	B	
	Spirits of salt, see Hydrochloric acid												
	Squibs, see Igniters *etc*												
	Stannic chloride, anhydrous	8	UN1827	II	8	B2, T8, T26	154	202	242	1 L	30 L	C	
	Stannic chloride, pentahydrate	8	UN2440	III	8		154	213	240	25 kg	100 kg	A	
	Stannic phosphide	4.3	UN1433	I	4.3, 6.1.	A19, B100, N40	None	211	242	Forbidden	15 kg	E	40, 85
	Steel swarf, see Ferrous metal borings, *etc.*												
	Stibine	2.3	UN2676		2.3, 2.1.	1	None	304	None	Forbidden	Forbidden	D	40
	Storage batteries, wet, see Batteries, *wet etc.*												
	Strontium arsenite	6.1	UN1691	II	6.1		None	212	242	25 kg	100 kg	A	
	Strontium chlorate	5.1	UN1506	II	5.1	A1, A9, N34	152	212	242	5 kg	25 kg	A	56, 58, 106
	Strontium nitrate	5.1	UN1507	III	5.1	A1, A29	152	213	240	25 kg	100 kg	A	
	Strontium perchlorate	5.1	UN1508	II	5.1		152	212	242	5 kg	25 kg	A	56, 58, 106
	Strontium peroxide	5.1	UN1509	II	5.1		152	212	242	5 kg	25 kg	A	13, 75, 106
	Strontium phosphide	4.3	UN2013	I	4.3, 6.1.	A19, N40	None	211	None	Forbidden	15 kg	E	40, 85
	Strychnine *or* Strychnine salts	6.1	UN1692	I	6.1		None	211	242	5 kg	50 kg	A	40
	Styphnic acid, *see* Trinitroresorcinol, *etc.*												
	Styrene monomer, inhibited	3	UN2055	III	3	B1, T1	150	203	242	60 L	220 L	A	
	Substances, explosive, n.o.s	1.1L	UN0357	II	1.1L	101	None	62	None	Forbidden	Forbidden	E	2E, 8E, 11E, 17E
	Substances, explosive, n.o.s	1.2L	UN0358	II	1.2L	101	None	62	None	Forbidden	Forbidden	E	2E, 8E, 11E, 17E
	Substances, explosive, n.o.s	1.3L	UN0359	II	1.3L	101	None	62	None	Forbidden	Forbidden	E	2E, 8E, 11E, 17E

	Substances, explosive, n.o.s	1.1A	UN0473	II	1.1A	101, 111	None	62	None	Forbidden	Forbidden	E	2E, 6E
	Substances, explosive, n.o.s	1.1C	UN0474	II	1.1C	101	None	62	None	Forbidden	Forbidden	B	1E, 5E
	Substances, explosive, n.o.s	1.1D	UN0475	II	1.1D	101	None	62	None	Forbidden	Forbidden	B	1E, 5E
	Substances, explosive, n.o.s	1.1G	UN0476	II	1.1G	101	None	62	None	Forbidden	Forbidden	E	1E, 8E
	Substances, explosive, n.o.s	1.3C	UN0477	II	1.3C	101	None	62	None	Forbidden	Forbidden	B	1E, 5E
	Substances, explosive, n.o.s	1.3G	UN0478	II	1.3G	101	None	62	None	Forbidden	Forbidden	E	1E, 8E
	Substances, explosive, n.o.s	1.4C	UN0479	II	1.4C	101	None	62	None	Forbidden	75 kg	A	1E, 5E
	Substances, explosive, n.o.s	1.4D	UN0480	II	1.4D	101	None	62	None	Forbidden	75 kg	A	1E, 5E, 24E
	Substances, explosive, n.o.s	1.4S	UN0481	II	1.4S	101	None	62	None	25 kg	75 kg	A	
	Substances, explosive, n.o.s	1.4G	UN0485	II	1.4G	101	None	62	None	Forbidden	75 kg	E	1E, 8E
	Substances, explosive, very insensitive, n.o.s., *or* Substances, EVI, n.o.s.	1.5D	UN0482	II	1.5D	101	None	62	None	Forbidden	Forbidden	B	1E, 5E
	Substituted nitrophenol pesticides, liquid, flammable, toxic, *flash point less than 23 degrees C.*	3	UN2780	I	3, 6.1		None	201	243	Forbidden	30 L	B	40
				II	3, 6.1		None	202	243	1 L	60 L	B	40
	Substituted nitrophenol pesticides, liquid, toxic.	6.1	UN3014	I	6.1	T42	None	201	243	1 L	30 L	B	40
				II	6.1	T14	None	202	243	5 L	60 L	B	40
				III	6.1	T14	153	203	241	60 L	220 L	A	40
	Substituted nitrophenol pesticides, liquid, toxic, flammable *flashpoint not less than 23 degrees C.*	6.1	UN3013	I	6.1, 3	T42	None	201	243	1 L	30 L	B	40
				II	6.1, 3	T14	None	202	243	5 L	60 L	B	40
				III	6.1, 3	B1, T14	153	203	242	60 L	220 L	A	40
	Substituted nitrophenol pesticides, solid, toxic.	6.1	UN2779	I	6.1		None	211	242	5 kg	50 kg	A	40
				II	6.1		None	212	242	25 kg	100 kg	A	40
				III	6.1		153	213	240	100 kg	200 kg	A	40
	Sucrose octanitrate (dry)	Forbidden											
	Sulfamic acid	8	UN2967	III	8		154	213	240	25 kg	100 kg	A	
D	Sulfur	9	NA1350	III	9	30, A1	None	None	240	25 kg	100 kg	A	19, 74
I	Sulfur	4.1	UN1350	III	4.1	30, A1, N20, T1	None	None	240	25 kg	100 kg	A	19, 74
	Sulfur and chlorate, loose mixtures of.	Forbidden											
	Sulfur chlorides	8	UN1828	I	8	5, A3, B10, B77, N34, T18, T27	None	201	243	Forbidden	2.5 L	C	40
	Sulfur dichloride, see Sulfur chlorides.												
	Sulfur dioxide	2.3	UN1079		2.3, 8	3, B14	None	304	314, 315.	Forbidden	25 kg	D	40
	Sulfur dioxide solution, see Sulfurous acid.												
	Sulfur hexafluoride	2.2	UN1080		2.2		306	304	314, 315.	75 kg	150 kg	A	
D	Sulfur, molten	9	NA2448	III	9	T9, T38	None	213	247	Forbidden	Forbidden	C	61
I	Sulfur, molten	4.1	UN2448	III	4.1	T9, T38	None	213	247	Forbidden	Forbidden	C	61
	Sulfur tetrafluoride	2.3	UN2418		2.3, 8	1	None	302	245	Forbidden	Forbidden	D	40

§172.101 HAZARDOUS MATERIALS TABLE—Continued

Symbols	Hazardous materials descriptions and proper shipping names	Hazard class or Division	Identification Numbers	PG	Label Codes	Special provisions	(8) Packaging (§173.***)			(9) Quantity limitations		(10) Vessel stowage	
							Exceptions	Non-bulk	Bulk	Passenger aircraft/rail	Cargo aircraft only	Location	Other
(1)	(2)	(3)	(4)	(5)	(6)	(7)	(8A)	(8B)	(8C)	(9A)	(9B)	(10A)	(10B)
+	Sulfur trioxide, inhibited *or* Sulfur trioxide, stabilized.	8	UN1829	I	8, 6.1	2, A7, B9, B14, B32, B49, B74, B77, N34, T38, T43, T45	None	227	244	Forbidden	25 kg	A	40
+, D	Sulfur trioxide, uninhibited	8	NA1829	I	8, 6.1	2, A7, B9, B14, B32, B49, B74, B77, N34, T38, T43, T45	None	227	244	Forbidden	25 kg	C	10, 40
	Sulfuretted hydrogen, see Hydrogen sulfide, liquefied.												
	Sulfuric acid, fuming *with less than 30 percent free sulfur trioxide.*	8	UN1831	I	8	A3, A7, B84, N34, T18, T27	None	201	243	Forbidden	2.5 L	C	14, 40
+	Sulfuric acid, fuming *with 30 percent or more free sulfur trioxide.*	8	UN1831	I	8, 6.1	2, A3, A6, A7, B9, B14, B32, B74, B77, B84, N34, T38, T43, T45	None	227	244	Forbidden	Forbidden	C	14, 40
	Sulfuric acid, spent	8	UN1832	II	8	A3, A7, B2, B83, B84, N34, T9, T27	None	202	242	Forbidden	30 L	C	14
	Sulfuric acid *with more than 51 percent acid.*	8	UN1830	II	8	A3, A7, B3, B83, B84, N34, T9, T27	154	202	242	1 L	30 L	C	14
	Sulfuric acid *with not more than 51% acid.*	8	UN2796	II	8	A3, A7, B2, B15, N6, N34, T9, T27	154	202	242	1 L	30 L	B	
	Sulfuric and hydrofluoric acid mixtures, *see* Hydrofluoric and sulfuric acid mixtures.												
	Sulfuric anhydride, see Sulfur trioxide, inhibited.												
	Sulfurous acid	8	UN1833	II	8	B3, T8	154	202	242	1 L	30 L	B	40
+	Sulfuryl chloride	8	UN1834	I	8, 6.1	1, A3, B6, B9, B10, B14, B30, B74, B77, N34, T38, T43, T44	None	226	244	Forbidden	Forbidden	C	40
	Sulfuryl fluoride	2.3	UN2191		2.3	4	None	304	314, 315.	Forbidden	25 kg	D	40
	Tars, liquid *including road asphalt and oils, bitumen and cut backs.*	3	UN1999	II	3	B13, T7, T30	150	202	242	5 L	60 L	B	
				III	3	B1, B13, T7, T30	150	203	242	60 L	220 L	A	
	Tear gas candles	6.1	UN1700	II	6.1, 4.1.		None	340	None	Forbidden	50 kg	D	40

	Tear gas cartridges, see Ammunition, tear-producing, *etc.*	.....			.....		.....	.....	.....	.....	.....		
D	Tear gas devices *with more than 2 percent tear gas substances, by mass.*	6.1	NA1693	I	6.1		None	340	None ..	Forbidden	Forbidden	D	40
	.....	.....		II	6.1		None	340	None ..	Forbidden	Forbidden	D	40
	Tear gas devices, with not more than 2 percent tear gas substances, by mass, see Aerosols, *etc.*	.....			.....		.....	.....	.....	.....	.....		
	Tear gas grenades, see Tear gas candles.	.....			.....		.....	.....	.....	.....	.....		
	Tear gas substances, liquid, n.o.s	6.1	UN1693	I	6.1		None	201	None ..	Forbidden	Forbidden	D	40
	.....	.....		II	6.1		None	202	None ..	Forbidden	5 L	D	40
	Tear gas substances, solid, n.o.s	6.1	UN1693	I	6.1		None	211	None ..	Forbidden	Forbidden	D	40
	.....	.....		II	6.1		None	212	None ..	Forbidden	25 kg	D	40
	Tellurium compound, n.o.s	6.1	UN3284	I	6.1		None	211	242	5 kg	50 kg	B	
	.....	.....		II	6.1	T14	None	212	242	25 kg	100 kg	B	
	.....	.....		III	6.1	T7	153	213	240	100 kg	200 kg	A	
	Tellurium hexafluoride	2.3	UN2195		2.3, 8	1	None	302	None ..	Forbidden	Forbidden	D	40
	Terpene hydrocarbons, n.o.s	3	UN2319	III	3	B1, T1	150	203	242	60 L	220 L	A	
	Terpinolene	3	UN2541	III	3	B1, T1	150	203	242	60 L	220 L	A	
	Tetraazido benzene quinone	Forbidden			.....		.....	.....	.....	.....	.....		
	Tetrabromoethane	6.1	UN2504	III	6.1	T7	153	203	241	60 L	220 L	A	
	Tetrachloroethane	6.1	UN1702	II	6.1	N36, T14	None	202	243	5 L	60 L	A	40
	Tetrachloroethylene	6.1	UN1897	III	6.1	N36, T1	153	203	241	60 L	220 L	A	40
	Tetraethyl dithiopyrophosphate	6.1	UN1704	II	6.1		None	212	242	25 kg	100 kg	D	40
D	Tetraethyl lead, liquid	6.1	NA1649	I	6.1, 3		None	201	None ..	Forbidden	Forbidden	E	40
D	Tetraethyl pyrophosphate, *liquid*	6.1	NA3018	I	6.1		None	201	243	Forbidden	1 L	A	40
D	Tetraethyl pyrophosphate *solid*	6.1	NA2783	I	6.1	N77	None	211	242	Forbidden	50 kg	A	40
	Tetraethyl silicate	3	UN1292	III	3	B1, T1	150	203	242	60 L	220 L	A	
	Tetraethylammonium perchlorate (dry).	Forbidden			.....		.....	.....	.....	.....	.....		
	Tetraethylenepentamine	8	UN2320	III	8	T2	154	203	241	5 L	60 L	A	
	1,1,1,2-Tetrafluoroethane *or* Refrigerant gas R 134a.	2.2	UN3159		2.2		306	304	314, 315.	75 kg	150 kg	A	
	Tetrafluoroethylene, inhibited	2.1	UN1081		2.1		306	304	None ..	Forbidden	150 kg	E	40
	Tetrafluoromethane, compressed*or* Refrigerant gas R 14.	2.2	UN1982		2.2		None	302	None ..	75 kg	150 kg	A	
	1,2,3,6-Tetrahydrobenzaldehyde	3	UN2498	III	3	B1, T1	150	203	242	60 L	220 L	A	
	Tetrahydrofuran	3	UN2056	II	3	T8	None	202	242	5 L	60 L	B	
	Tetrahydrofurfurylamine	3	UN2943	III	3	B1, T1	150	203	242	60 L	220 L	A	
	Tetrahydrophthalic anhydrides *with more than 0.05 percent of maleic anhydride.*	8	UN2698	III	8		154	213	240	25 kg	100 kg	A	
	1,2,3,6-Tetrahydropyridine	3	UN2410	II	3	T8	150	202	242	5 L	60 L	B	
	Tetrahydrothiophene	3	UN2412	II	3	T7	150	202	242	5 L	60 L	B	
	Tetramethylammonium hydroxide	8	UN1835	II	8	B2, T8	154	202	242	1 L	30 L	A	
	Tetramethylene diperoxide dicarbamide.	Forbidden			.....		.....	.....	.....	.....	.....		

§172.101 HAZARDOUS MATERIALS TABLE—Continued

Symbols	Hazardous materials descriptions and proper shipping names	Hazard class or Division	Identification Numbers	PG	Label Codes	Special provisions	(8) Packaging (§173.***)			(9) Quantity limitations		(10) Vessel stowage	
							Exceptions	Nonbulk	Bulk	Passenger aircraft/rail	Cargo aircraft only	Location	Other
(1)	(2)	(3)	(4)	(5)	(6)	(7)	(8A)	(8B)	(8C)	(9A)	(9B)	(10A)	(10B)
	Tetramethylsilane	3	UN2749	I	3	T21, T26	None	201	243	Forbidden	30 L	D	
	Tetranitro diglycerin	Forbidden											
	Tetranitroaniline	1.1D	UN0207	II	1.1D		None	62	None	Forbidden	Forbidden	B	1E, 5E
+	Tetranitromethane	5.1	UN1510	I	5.1, 6.1.	2, B9, B14, B32, B74, T38, T43, T45	None	227	None	Forbidden	Forbidden	D	40, 66, 106
	2,3,4,6-Tetranitrophenol	Forbidden											
	2,3,4,6-Tetranitrophenyl methyl nitramine.	Forbidden											
	2,3,4,6-Tetranitrophenylnitramine	Forbidden											
	Tetranitroresorcinol (dry)	Forbidden											
	2,3,5,6-Tetranitroso-1,4-dinitrobenzene.	Forbidden											
	2,3,5,6-Tetranitroso nitrobenzene (dry).	Forbidden											
	Tetrapropylorthotitanate	3	UN2413	III	3	B1, T8	150	203	242	60 L	220 L	A	
	Tetrazene, *see* Guanyl nitrosaminoguanyltetrazene.												
	Tetrazine (dry)	Forbidden											
	Tetrazol-1-acetic acid	1.4C	UN0407	II	1.4C		None	62	None	Forbidden	75 kg	A	1E, 5E, 24E
	Tetrazolyl azide (dry)	Forbidden											
	Tetryl, *see* Trinitrophenylmethylnitramine.												
	Thallium chlorate	5.1	UN2573	II	5.1, 6.1.		None	212	242	5 kg	25 kg	A	56, 58, 106
	Thallium compounds, n.o.s	6.1	UN1707	II	6.1		None	212	242	25 kg	100 kg	A	
	Thallium nitrate	6.1	UN2727	II	6.1, 5.1.		None	212	242	5 kg	25 kg	A	
D	Thallium sulfate, solid	6.1	NA1707	II	6.1		None	212	242	5 kg	50 kg	A	
	4-Thiapentanal	6.1	UN2785	III	6.1	T8	153	203	241	60 L	220 L	D	25, 49
	Thioacetic acid	3	UN2436	II	3	T8	150	202	242	5 L	60 L	B	
	Thiocarbonylchloride, *see* Thiophosgene.												
	Thioglycol	6.1	UN2966	II	6.1	T8	None	202	243	5 L	60 L	A	
	Thioglycolic acid	8	UN1940	II	8	A7, B2, N34, T8	154	202	242	1 L	30 L	A	
	Thiolactic acid	6.1	UN2936	II	6.1	T8	None	212	242	25 kg	100 kg	A	
	Thionyl chloride	8	UN1836	I	8	A7, B6, B10, N34, T18, T27	None	201	243	Forbidden	Forbidden	C	40

	Thiophene	3	UN2414	II	3	B101, T2	150	202	242	5 L	60 L	B	40
+	Thiophosgene	6.1	UN2474	II	6.1	2, A7, B9, B14, B32, B74, N33, N34, T38, T43, T45	None	227	244	Forbidden	60 L	B	26, 40
	Thiophosphoryl chloride	8	UN1837	II	8	A3, A7, B2, B8, B25, B101, N34, T12	None	202	242	Forbidden	30 L	C	40
	Thorium metal, pyrophoric	7	UN2975		7, 4.2		None	418	None	Forbidden	Forbidden	D	
	Thorium nitrate, solid	7	UN2976		7, 5.1		None	419	None	Forbidden	15 kg	A	
	Tin chloride, fuming, see Stannic chloride, anhydrous.												
	Tin perchloride or Tin tetrachloride, see Stannic chloride, anhydrous.												
	Tinctures, medicinal	3	UN1293	II	3	T8, T31	150	202	242	5 L	60 L	B	
				III	3	B1, T7, T30	150	203	242	60 L	220 L	A	
	Tinning flux, see Zinc chloride												
	Titanium disulphide	4.2	UN3174	III	4.2		None	213	241	25 kg	100 kg	A	
	Titanium hydride	4.1	UN1871	II	4.1	A19, A20, N34	None	212	241	15 kg	50 kg	E	
	Titanium powder, dry	4.2	UN2546	I	4.2		None	211	242	Forbidden	Forbidden	D	
				II	4.2	A19, A20, N5, N34	None	212	241	15 kg	50 kg	D	
				III	4.2		None	213	241	25 kg	100 kg	D	
	Titanium powder, wetted *with not less than 25 percent water (a visible excess of water must be present) (a) mechanically produced, particle size less than 53 microns; (b) chemically produced, particle size less than 840 microns.*	4.1	UN1352	II	4.1	A19, A20, N34	None	212	240	15 kg	50 kg	E	
	Titanium sponge granules *or* Titanium sponge powders.	4.1	UN2878	III	4.1	A1	None	213	240	25 kg	100 kg	D	
D	Titanium sulfate solution	8	NA1760	II	8	B2, B15	None	202	242	1 L	30 L	B	40
+	Titanium tetrachloride	8	UN1838	II	8, 6.1	2, A3, A6, B7, B9, B14, B32, B74, B77, T38, T43, T45	None	227	244	Forbidden	30 L	C	40
	Titanium trichloride mixtures	8	UN2869	II	8	A7, B106, N34	154	212	240	15 kg	50 kg	A	40
				III	8	A7, N34	154	213	240	25 kg	100 kg	A	40
	Titanium trichloride, pyrophoric *or* Titanium trichloride mixtures, pyrophoric.	4.2	UN2441	I	4.2, 8	A7, A8, A19, A20, N34	None	181	244	Forbidden	Forbidden	D	40
	TNT mixed with aluminum, see *Tritonal.*												
	TNT, *see* Trinitrotoluene, *etc*												
	Toluene	3	UN1294	II	3	T1	150	202	242	5 L	60 L	B	
	Toluene diisocyanate	6.1	UN2078	II	6.1	B110, T14	None	202	243	5 L	60 L	D	25, 40
	Toluene sulfonic acid, see Alkyl, *or* Aryl sulfonic acid *etc.*												
	Toluidines *liquid*	6.1	UN1708	II	6.1	T14	None	202	243	5 L	60 L	A	

§172.101 HAZARDOUS MATERIALS TABLE—Continued

Symbols	Hazardous materials descriptions and proper shipping names	Hazard class or Division	Identification Numbers	PG	Label Codes	Special provisions	(8) Packaging (§173.***)			(9) Quantity limitations		(10) Vessel stowage	
							Exceptions	Non-bulk	Bulk	Passenger aircraft/rail	Cargo aircraft only	Location	Other
(1)	(2)	(3)	(4)	(5)	(6)	(7)	(8A)	(8B)	(8C)	(9A)	(9B)	(10A)	(10B)
	Toluidines *solid*	6.1	UN1708	II	6.1		None	212	242	25 kg	100 kg	A	
	2,4-Toluylenediamine *or* 2,4-Toluenediamine.	6.1	UN1709	III	6.1	T7	153	213	240	100 kg	200 kg	A	
	Torpedoes, liquid fueled, *with inert head.*	1.3J	UN0450	II	1.3J			62	None	Forbidden	Forbidden	E	7E, 16E, 23E
	Torpedoes, liquid fueled, *with or without bursting charge.*	1.1J	UN0449	II	1.1J			62	None	Forbidden	Forbidden	E	7E, 16E, 23E
	Torpedoes *with bursting charge*	1.1E	UN0329	II	1.1E			62	None	Forbidden	Forbidden	B	
	Torpedoes *with bursting charge*	1.1F	UN0330	II	1.1F			62	None	Forbidden	Forbidden	B	
	Torpedoes *with bursting charge*	1.1D	UN0451	II	1.1D			62	None	Forbidden	Forbidden	B	
	Toxic liquid, corrosive, inorganic, n.o.s.	6.1	UN3289	I	6.1, 8	T42	None	201	243	0.5 L	2.5 L	A	
				II	6.1, 8	T14	None	202	243	1 L	30 L	A	
	Toxic liquid, corrosive, inorganic, n.o.s. *Inhalation Hazard, Packing Group I, Zone A.*	6.1	UN3289	I	6.1, 8	1, B9, B14, B30, B72, T38, T43, T44	None	226	244	Forbidden	Forbidden	B	40
	Toxic liquid, corrosive, inorganic, n.o.s. *Inhalation Hazard, Packing Group I, Zone B.*	6.1	UN3289	I	6.1, 8	2, B9, B14, B32, B74, T38, T43, T45	None	227	244	Forbidden	Forbidden	B	40
	Toxic liquid, inorganic, n.o.s	6.1	UN3287	I	6.1	T42	None	201	243	1 L	30 L	A	
				II	6.1	B110, T14	None	202	243	5 L	60 L	A	
				III	6.1	T7	153	203	241	60 L	220 L	A	
	Toxic liquid, inorganic, n.o.s. *Inhalation Hazard, Packing Group I, Zone A.*	6.1	UN3287	I	6.1	1, B9, B14, B30, B72, T38, T43, T44	None	226	244	Forbidden	Forbidden	B	40
	Toxic liquid, inorganic, n.o.s. *Inhalation Hazard, Packing Group I, Zone B.*	6.1	UN3287	I	6.1	2, B9, B14, B32, B74, T38, T43, T45	None	227	244	Forbidden	Forbidden	B	40
	Toxic liquids, corrosive, organic, n.o.s.	6.1	UN2927	I	6.1, 8	T42	None	201	243	0.5 L	2.5 L	B	40
				II	6.1, 8	T42	None	202	243	1 L	30 L	B	40
	Toxic liquids, corrosive, organic, n.o.s., *inhalation hazard, Packing Group I, Zone A.*	6.1	UN2927	I	6.1, 8	1, B9, B14, B30, B72, T38, T43, T44	None	226	244	Forbidden	Forbidden	D	20, 40, 95
	Toxic liquids, corrosive, organic, n.o.s., *inhalation hazard, Packing Group I, Zone B.*	6.1	UN2927	I	6.1, 8	2, B9, B14, B32, B74, T38, T43, T45	None	227	244	Forbidden	Forbidden	D	20, 40, 95

Toxic liquids, flammable, organic, n.o.s.	6.1	UN2929	I	6.1, 3	T42	None	201	243	1 L	30 L	B	40
.....	.....		II	6.1, 3	T15	None	202	243	5 L	60 L	B	40
Toxic liquids, flammable, organic, n.o.s., *inhalation hazard, Packing Group I, Zone A.*	6.1	UN2929	I	6.1, 3	1, B9, B14, B30, B72, T38, T43, T44	None	226	244	Forbidden	Forbidden	D	20, 40, 95
Toxic liquids, flammable, organic, n.o.s., *inhalation hazard, Packing Group I, Zone B.*	6.1	UN2929	I	6.1, 3	2, B9, B14, B32, B74, T38, T43, T45	None	227	244	Forbidden	Forbidden	D	20, 40, 95
Toxic, liquids, organic, n.o.s	6.1	UN2810	I	6.1	T42	None	201	243	1 L	30 L	B	40
.....	.....		II	6.1	B110, T14	None	202	243	5 L	60 L	B	40
.....	.....		III	6.1	T7	153	203	241	60 L	220 L	A	40
Toxic, liquids, organic, n.o.s. *Inhalation hazard, Packing Group I, Zone A.*	6.1	UN2810	I	6.1	1, B9, B14, B30, B72, T38, T43, T44	None	226	244	Forbidden	Forbidden	D	20, 40, 95
Toxic, liquids, organic, n.o.s. *Inhalation hazard, Packing Group I, Zone B.*	6.1	UN2810	I	6.1	2, B9, B14, B32, B74, T38, T43, T45	None	227	244	Forbidden	Forbidden	D	20, 40, 95
Toxic liquids, oxidizing, n.o.s	6.1	UN3122	I	6.1, 5.1.	A4	None	201	243	Forbidden	2.5 L	C	
.....	.....		II	6.1, 5.1.		None	202	243	1 L	5 L	C	
Toxic liquids, oxidizing, n.o.s. *Inhalation hazard, Packing Group I, Zone A.*	6.1	UN3122	I	6.1, 5.1.	1, B9, B14, B30, B72, T38, T43, T44	None	226	244	Forbidden	Forbidden	C	
Toxic liquids, oxidizing, n.o.s. *Inhalation Hazard, Packing Group I, Zone B.*	6.1	UN3122	I	6.1, 5.1.	2, B9, B14, B32, T38, T43, T45	None	227	244	Forbidden	Forbidden	C	
Toxic liquids, water-reactive, n.o.s	6.1	UN3123	I	6.1, 4.3.	A4	None	201	243	Forbidden	1 L	E	40
.....	.....		II	6.1, 4.3.		None	202	243	1 L	5 L	E	40
Toxic liquids, water-reactive, n.o.s. *Inhalation hazard, packing group I, Zone A.*	6.1	UN3123	I	6.1, 4.3.	1, B9, B14, B30, B72, T38, T43, T44	None	226	244	Forbidden	Forbidden	E	40
Toxic liquids, water-reactive, n.o.s. *Inhalation hazard, packing group I, Zone B.*	6.1	UN3123	I	6.1, 4.3.	2, B9, B14, B32, B74, T38, T43, T45	None	227	244	Forbidden	Forbidden	E	40
Toxic solid, corrosive, inorganic, n.o.s.	6.1	UN3290	I	6.1, 8		None	211	242	1 kg	25 kg	A	
.....	.....		II	6.1, 8		None	212	242	15 kg	50 kg	A	
Toxic solid, inorganic, n.o.s	6.1	UN3288	I	6.1		None	211	242	5 kg	50 kg	A	
.....	.....		II	6.1		None	212	242	25 kg	100 kg	A	
.....	.....		III	6.1		153	213	240	100 kg	200 kg	A	
Toxic solids, corrosive, organic, n.o.s	6.1	UN2928	I	6.1, 8		None	211	242	1 kg	25 kg	B	40
.....	.....		II	6.1, 8		None	212	242	15 kg	50 kg	B	40
Toxic solids, flammable, organic, n.o.s.	6.1	UN2930	I	6.1, 4.1.	B106	None	211	242	1 kg	15 kg	B	
.....	.....		II	6.1, 4.1.	B106	None	212	242	15 kg	50 kg	B	

§172.101 HAZARDOUS MATERIALS TABLE—Continued

Symbols	Hazardous materials descriptions and proper shipping names	Hazard class or Division	Identification Numbers	PG	Label Codes	Special provisions	(8) Packaging (§173.***)			(9) Quantity limitations		(10) Vessel stowage	
							Exceptions	Nonbulk	Bulk	Passenger aircraft/rail	Cargo aircraft only	Location	Other
(1)	(2)	(3)	(4)	(5)	(6)	(7)	(8A)	(8B)	(8C)	(9A)	(9B)	(10A)	(10B)
	Toxic solids, organic, n.o.s	6.1	UN2811	I	6.1		None	211	242	5 kg	50 kg	B	
	.....	.....		II	6.1		None	212	242	25 kg	100 kg	B	
	.....	.....		III	6.1		153	213	240	100 kg	200 kg	A	
	Toxic solids, oxidizing, n.o.s	6.1	UN3086	I	6.1, 5.1.		None	211	242	1 kg	15 kg	C	
	.....	.....		II	6.1, 5.1.		None	212	242	15 kg	50 kg	C	
	Toxic solids, self-heating, n.o.s	6.1	UN3124	I	6.1, 4.2.	A5, B100	None	211	242	5 kg	15 kg	D	40
	.....	.....		II	6.1, 4.2.		None	212	242	15 kg	50 kg	D	40
	Toxic solids, water-reactive, n.o.s	6.1	UN3125	I	6.1, 4.3.	A5, B100	None	211	242	5 kg	15 kg	D	40
	.....	.....		II	6.1, 4.3.	B101	None	212	242	15 kg	50 kg	D	40
D	Toy Caps	1.4S	NA0337	II	1.4S		None	62	None	25 kg	100 kg	A	9E
	Tracers for ammunition	1.3G	UN0212	II	1.3G		None	62	None	Forbidden	Forbidden	B	
	Tracers for ammunition	1.4G	UN0306	II	1.4G		None	62	None	Forbidden	75 kg	A	24E
	Tractors, see Vehicles, self propelled	.....			.....		.....	.....	.....	.....	.....		
	Tri-(b-nitroxyethyl) ammonium nitrate	Forbidden			.....		.....	.....	.....	.....	.....		
	Triallyl borate	6.1	UN2609	III	6.1		153	203	241	60 L	220 L	A	13
	Triallylamine	3	UN2610	III	3, 8	B1, T1	None	203	242	5 L	60 L	A	40
	Triazine pesticides, flammable, toxic, *flash point less than 23 degrees C.*	3	UN2764	I	3, 6.1	.....	None	201	243	Forbidden	30 L	B	40
	.....	.....		II	3, 6.1	.....	None	202	243	1 L	60 L	B	40
	Triazine pesticides, liquid, toxic	6.1	UN2998	I	6.1	T42	None	201	243	1 L	30 L	B	40
	.....	.....		II	6.1	T14	None	202	243	5 L	60 L	B	40
	.....	.....		III	6.1	T14	153	203	241	60 L	220 L	A	40
	Triazine pesticides, liquid, toxic, flammable, *flashpoint not less than 23 degrees C.*	6.1	UN2997	I	6.1, 3	T42	None	201	243	1 L	30 L	B	40
	.....	.....		II	6.1, 3	T14	None	202	243	5 L	60 L	B	40
	.....	.....		III	6.1, 3	T14	153	203	242	60 L	220 L	A	40
	Triazine pesticides, solid, toxic	6.1	UN2763	I	6.1		None	211	242	5 kg	50 kg	A	40
	.....	.....		II	6.1		None	212	242	25 kg	100 kg	A	40
	.....	.....		III	6.1		153	213	240	100 kg	200 kg	A	40
	Tributylamine	6.1	UN2542	II	6.1	B110, T14	None	202	243	5 L	60 L	A	.....
	Tributylphosphane	4.2	UN3254	I	4.2		None	211	242	Forbidden	Forbidden	D	

D	mono-(Trichloro) tetra-(monopotassium dichloro)-penta-s-triazinetrione, dry (*with more than 39 percent available chlorine.*	5.1	NA2468	II	5.1		152	212	240	5 kg	25 kg	A	13
	Trichloro-s-triazinetrione dry, with more than 39 percent available chlorine, see Trichloroisocyanuric acid, dry.	.....			.....		.....	.....	.....	.....	.....		
	Trichloroacetic acid	8	UN1839	II	8	A7, N34	154	212	240	15 kg	50 kg	A	
	Trichloroacetic acid, solution	8	UN2564	II	8	A3, A6, A7, B2, N34, T8	154	202	242	1 L	30 L	B	
	.....	.....		III	8	A3, A6, A7, N34, T7	154	203	241	5 L	60 L	B	8
+	Trichloroacetyl chloride	8	UN2442	II	8, 6.1	2, A3, A7, B9, B14, B32, B74, N34, T38, T43, T45	None	227	244	Forbidden	Forbidden	D	40
	Trichlorobenzenes, liquid	6.1	UN2321	III	6.1	T7	153	203	241	60 L	220 L	A	
	Trichlorobutene	6.1	UN2322	II	6.1	T8	None	202	243	5 L	60 L	A	25, 40
	1,1,1-Trichloroethane	6.1	UN2831	III	6.1	N36, T7	153	203	241	60 L	220 L	A	40
	Trichloroethylene	6.1	UN1710	III	6.1	N36, T1	153	203	241	60 L	220 L	A	40
	Trichloroisocyanuric acid, dry	5.1	UN2468	II	5.1		152	212	240	5 kg	25 kg	A	13
	Trichloromethyl perchlorate	Forbidden			.....		.....	.....	.....	.....	.....		
	Trichlorosilane	4.3	UN1295	I	4.3, 3, 8.	A7, N34, T24, T26	None	201	244	Forbidden	Forbidden	D	21, 28, 40, 49, 100
	Tricresyl phosphate *with more than 3 percent ortho isomer.*	6.1	UN2574	II	6.1	A3, N33, N34, T8	None	202	243	5 L	60 L	A	
	Triethyl phosphite	3	UN2323	III	3	B1, T1	150	203	242	60 L	220 L	A	
	Triethylamine	3	UN1296	II	3, 8	B101, T8	None	202	243	1 L	5 L	B	40
	Triethylenetetramine	8	UN2259	II	8	B2, T8	154	202	242	1 L	30 L	B	40
	Trifluoroacetic acid	8	UN2699	I	8	A3, A6, A7, B4, N3, N34, T18, T27	None	201	243	0.5 L	2.5 L	B	12, 40
	Trifluoroacetyl chloride	2.3	UN3057		2.3, 8	2, B9, B14	None	304	314, 315.	Forbidden	Forbidden	D	40
	Trifluorochloroethylene, inhibited	2.3	UN1082	.....	2.3, 2.1.	3,B14	None	304	314, 315.	Forbidden	Forbidden	D	40
	1,1,1-Trifluoroethane, compressed*or* Refrigerant gas R 143a.	2.1	UN2035		2.1		306	304	314, 315.	Forbidden	150 kg	B	40
	Trifluoromethane *or* Refrigerant gas R 23.	2.2	UN1984		2.2		306	304	314, 315.	75 kg	150 kg	A	
	Trifluoromethane, refrigerated liquid	2.2	UN3136		2.2		306	None ..	314, 315.	50 kg	500 kg	D	
	2-Trifluoromethylaniline	6.1	UN2942	III	6.1		153	203	241	60 L	220 L	A	
	3-Trifluoromethylaniline	6.1	UN2948	II	6.1	T14	None	202	243	5 L	60 L	A	40
	Triformoxime trinitrate	Forbidden			.....		.....	.....	.....	.....	.....		
	Triisobutylene	3	UN2324	III	3	B1, T7, T30	150	203	242	60 L	220 L	A	
	Triisopropyl borate	3	UN2616	II	3	T8, T31	150	202	242	5 L	60 L	A	
	.....	.....		III	3	B1, T8, T31	150	203	242	60 L	220 L	A	

§172.101 HAZARDOUS MATERIALS TABLE—Continued

Symbols	Hazardous materials descriptions and proper shipping names	Hazard class or Division	Identification Numbers	PG	Label Codes	Special provisions	(8) Packaging (§173.***)			(9) Quantity limitations		(10) Vessel stowage	
							Exceptions	Nonbulk	Bulk	Passenger aircraft/rail	Cargo aircraft only	Location	Other
(1)	(2)	(3)	(4)	(5)	(6)	(7)	(8A)	(8B)	(8C)	(9A)	(9B)	(10A)	(10B)
D	Trimethoxysilane	6.1	NA9269	I	6.1, 3	2, B9, B14, B32, B74, T38, T43, T45	None	227	244	Forbidden	Forbidden	E	40
	Trimethyl borate	3	UN2416	II	3	T14	150	202	242	5 L	60 L	B	
	Trimethyl phosphite	3	UN2329	III	3	B1, T1	150	203	242	60 L	220 L	A	
	1,3,5-Trimethyl-2,4,6-trinitrobenzene	Forbidden											
	Trimethylacetyl chloride	6.1	UN2438	I	6.1, 8, 3.	2, A3, A6, A7, B3, B9, B14, B32, B74, N34, T38, T43, T45	None	227	244	Forbidden	Forbidden	D	25, 40
	Trimethylamine, anhydrous	2.1	UN1083		2.1		306	304	314, 315.	Forbidden	150 kg	B	40
	Trimethylamine, aqueous solutions *with not more than 50 percent trimethylamine by mass.*	3	UN1297	I	3, 8	T42	None	201	243	0.5 L	2.5 L	D	40, 41
				II	3, 8	B1, T14	None	202	243	1 L	5 L	B	40, 41
				III	3, 8	B1	150	203	242	5 L	60 L	A	40, 41
	1,3,5-Trimethylbenzene	3	UN2325	III	3	B1, T1	None	203	242	60 L	220 L	A	
	Trimethylchlorosilane	3	UN1298	II	3, 8	A3, A7, B77, N34, T14, T26	None	202	243	1 L	5 L	E	40
	Trimethylcyclohexylamine	8	UN2326	III	8	T2	154	203	241	5 L	60 L	A	
	Trimethylene glycol diperchlorate	Forbidden											
	Trimethylhexamethylene diisocyanate.	6.1	UN2328	III	6.1	T8	153	203	241	60 L	220 L	B	
	Trimethylhexamethylenediamines	8	UN2327	III	8	T7	154	203	241	5 L	60 L	A	
	Trimethylol nitromethane trinitrate	Forbidden											
	Trinitro-meta-cresol	1.1D	UN0216	II	1.1D		None	62	None	Forbidden	Forbidden	B	1E, 5E
	2,4,6-Trinitro-1,3-diazobenzene	Forbidden											
	2,4,6-Trinitro-1,3,5-triazido benzene (dry).	Forbidden											
	Trinitroacetic acid	Forbidden											
	Trinitroacetonitrile	Forbidden											
	Trinitroamine cobalt	Forbidden											
	Trinitroaniline *or* Picramide	1.1D	UN0153	II	1.1D		None	62	None	Forbidden	Forbidden	B	1E, 5E
	Trinitroanisole	1.1D	UN0213	II	1.1D		None	62	None	Forbidden	Forbidden	B	1E, 5E
	Trinitrobenzene, *dry or wetted with less than 30 percent water, by mass.*	1.1D	UN0214	II	1.1D		None	62	None	Forbidden	Forbidden	B	1E, 5E

Trinitrobenzene, wetted *with not less than 30 percent water, by mass.*	4.1	UN1354	I	4.1	23, A2, A8, A19, N41	None	211	None ..	0.5 kg	0.5 kg	E	28
Trinitrobenzenesulfonic acid	1.1D	UN0386	II	1.1D ...		None	62	None ..	Forbidden	Forbidden	E	1E, 5E
Trinitrobenzoic acid, *dry or wetted with less than 30 percent water, by mass.*	1.1D	UN0215	II	1.1D ...		None	62	None ..	Forbidden	Forbidden	B	1E, 5E
Trinitrobenzoic acid, wetted *with not less than 30 percent water, by mass.*	4.1	UN1355	I	4.1	23, A2, A8, A19, N41	None	211	None ..	0.5 kg	0.5 kg	E	28
Trinitrochlorobenzene *or* Picryl chloride.	1.1D	UN0155	II	1.1D ...		None	62	None ..	Forbidden	Forbidden	B	1E, 5E
Trinitroethanol	Forbidden			.....		.....	.....	.....	.....	.....		
Trinitroethylnitrate	Forbidden			.....		.....	.....	.....	.....	.....		
Trinitrofluorenone	1.1D	UN0387	II	1.1D ...		None	62	None ..	Forbidden	Forbidden	B	1E, 5E
Trinitromethane	Forbidden			.....		.....	.....	.....	.....	.....		
1,3,5-Trinitronaphthalene	Forbidden			.....		.....	.....	.....	.....	.....		
Trinitronaphthalene	1.1D	UN0217	II	1.1D ...		None	62	None ..	Forbidden	Forbidden	B	1E, 5E
Trinitrophenetole	1.1D	UN0218	II	1.1D ...		None	62	None ..	Forbidden	Forbidden	B	1E, 5E
Trinitrophenol *or* Picric acid, *dry or wetted with less than 30 percent water, by mass.*	1.1D	UN0154	II	1.1D ...		None	62	None ..	Forbidden	Forbidden	B	1E, 5E
Trinitrophenol, wetted *with not less than 30 percent water, by mass.*	4.1	UN1344	I	4.1	23, A8, A19, N41	None	211	None ..	1 kg	15 kg	E	28, 36
2,4,6-Trinitrophenyl guanidine (dry) ..	Forbidden			.....		.....	.....	.....	.....	.....		
2,4,6-Trinitrophenyl nitramine	Forbidden			.....		.....	.....	.....	.....	.....		
2,4,6-Trinitrophenyl trimethylol methyl nitramine trinitrate (dry).	Forbidden			.....		.....	.....	.....	.....	.....		
Trinitrophenylmethylnitramine *or* Tetryl.	1.1D	UN0208	II	1.1D ...		None	62	None ..	Forbidden	Forbidden	B	1E, 5E
Trinitroresorcinol *or* Styphnic acid, *dry or wetted with less than 20 percent water, or mixture of alcohol and water, by mass.*	1.1D	UN0219	II	1.1D ...		None	62	None ..	Forbidden	Forbidden	B	1E, 5E
Trinitroresorcinol, wetted *or* Styphnic acid, wetted *with not less than 20 percent water, or mixture of alcohol and water by mass.*	1.1D	UN0394	II	1.1D ...		None	62	None ..	Forbidden	Forbidden	B	1E, 5E
2,4,6-Trinitroso-3-methyl nitraminoanisole.	Forbidden			.....		.....	.....	.....	.....	.....		
Trinitrotetramine cobalt nitrate	Forbidden			.....		.....	.....	.....	.....	.....		
Trinitrotoluene and Trinitrobenzene mixtures *or* TNT and trinitrobenzene mixtures *or* TNT and hexanitrostilbene mixtures *or* Trinitrotoluene and hexanitrostilnene mixtures.	1.1D	UN0388	II	1.1D ...		None	62	None ..	Forbidden	Forbidden	B	1E, 5E
Trinitrotoluene mixtures containing Trinitrobenzene and Hexanitrostilbene *or* TNT mixtures containing trinitrobenzene and hexanitrostilbene.	1.1D	UN0389	II	1.1D ...		None	62	None ..	Forbidden	Forbidden	B	1E, 5E

§172.101 HAZARDOUS MATERIALS TABLE—Continued

Symbols	Hazardous materials descriptions and proper shipping names	Hazard class or Division	Identification Numbers	PG	Label Codes	Special provisions	(8) Packaging (§173.***)			(9) Quantity limitations		(10) Vessel stowage	
							Exceptions	Nonbulk	Bulk	Passenger aircraft/rail	Cargo aircraft only	Location	Other
(1)	(2)	(3)	(4)	(5)	(6)	(7)	(8A)	(8B)	(8C)	(9A)	(9B)	(10A)	(10B)
	Trinitrotoluene *or* TNT, *dry or wetted with less than 30 percent water, by mass.*	1.1D	UN0209	II	1.1D ...		None	62	None ..	Forbidden	Forbidden	B	1E, 5E
	Trinitrotoluene, wetted *with not less than 30 percent water, by mass.*	4.1	UN1356	I	4.1	23, A2, A8, A19, N41	None	211	None ..	0.5 kg	0.5 kg	E	28
	Tripropylamine	3	UN2260	III	3, 8	B1, T8	150	203	242	5 L	60 L	A	40
	Tripropylene	3	UN2057	II	3	T1	150	202	242	5 L	60 L	B	
	.....	.....		III	3	B1, T1	150	203	242	60 L	220 L	A	
	Tris-(1-aziridinyl)phosphine oxide, solution.	6.1	UN2501	II	6.1	T8	None	202	243	5 L	60 L	A	
	.....	.....		III	6.1	T7	153	203	241	60 L	220 L	A	
	Tris, bis-bifluoroamino diethoxy propane (TVOPA).	Forbidden			.....		.....	.....	.....	.....	.....		
	Tritonal	1.1D	UN0390	II	1.1D ...		None	62	None ..	Forbidden	Forbidden	B	1E, 5E
	Tungsten hexafluoride	2.3	UN2196		2.3, 8	2	None	338	None ..	Forbidden	Forbidden	D	40
	Turpentine	3	UN1299	III	3	B1, T1	150	203	242	60 L	220 L	A	
	Turpentine substitute	3	UN1300	I	3	T1	None	201	243	1 L	30 L	B	
	.....	.....		II	3	T1	150	202	242	5 L	60 L	B	
	.....	.....		III	3	B1, T1	150	203	242	60 L	220 L	A	
	Undecane	3	UN2330	III	3	B1, T1	150	203	242	60 L	220 L	A	
	Uranium hexafluoride, *fissile excepted or non-fissile.*	7	UN2978		7, 8		423	420, 425.	420, 425.	.....	.....		
	Uranium hexafluoride, fissile (*with more than 1 percent U-235.*	7	UN2977		7, 8		453	417, 420.	417, 420.	.....	.....	A	
	Uranium metal, pyrophoric	7	UN2979		7, 4.2		None	418	None ..	.....	.....	D	
	Uranyl nitrate hexahydrate solution ..	7	UN2980		7, 8		421, 425	415, 416, 417.	415, 416, 417.	.....	.....	D	
	Uranyl nitrate, solid	7	UN2981		7, 5.1		None	419	None ..	Forbidden	15 kg	A	
	Urea hydrogen peroxide	5.1	UN1511	III	5.1, 8	A1, A7, A29	152	213	240	25 kg	100 kg	A	13
	Urea nitrate, *dry or wetted with less than 20 percent water, by mass.*	1.1D	UN0220	II	1.1D ...	119	None	62	None ..	Forbidden	Forbidden	B	1E, 5E
	Urea nitrate, wetted *with not less than 20 percent water, by mass.*	4.1	UN1357	I	4.1	39, A8, A19, N41	None	211	None ..	1 kg	15 kg	A	28
	Urea peroxide, see Urea hydrogen peroxide.	.....			.....		.....	.....	.....	.....	.....		
	Valeraldehyde	3	UN2058	II	3	T1	150	202	242	5 L	60 L	B	
	Valeric acid, see Corrosive liquids, n.o.s.	.....			.....		.....	.....	.....	.....	.....		

	Valeryl chloride	8	UN2502	II	8, 3	A3, A6, A7, B2, N34, T8	154	202	243	1 L	30 L	C	40
	Vanadium compound, n.o.s	6.1	UN3285	I	6.1		None	211	242	5 kg	50 kg	B	
				II	6.1	T14	None	212	242	25 kg	100 kg	B	
				III	6.1	T7	153	213	240	100 kg	200 kg	A	
	Vanadium oxytrichloride	8	UN2443	II	8	A3, A6, A7, B2, B16, N34, T8, T26	154	202	242	Forbidden	30 L	C	40
	Vanadium pentoxide, *non-fused form*	6.1	UN2862	II	6.1		None	212	242	25 kg	100 kg	A	
	Vanadium tetrachloride	8	UN2444	I	8	A3, A6, A7, B4, N34, T8, T26	None	201	243	Forbidden	2.5 L	C	40
	Vanadium trichloride	8	UN2475	III	8		154	213	240	25 kg	100 kg	A	40
	Vanadyl sulfate	6.1	UN2931	II	6.1		None	212	242	25 kg	100 kg	A	
D	*Vehicles, self-propelled including internal combustion engines or other apparatus containing an internal combustion Engine or electric storage battery, see* Engines *etc. or* Battery powered *etc. or* Wheel chair, electric).												
	Very signal cartridge, see Cartridges, signal.												
	Vinyl acetate, inhibited	3	UN1301	II	3	T8	150	202	242	5 L	60 L	B	
	Vinyl bromide, inhibited	2.1	UN1085		2.1		306	304	314, 315.	Forbidden	150 kg	B	40
	Vinyl butyrate, inhibited	3	UN2838	II	3	T7	150	202	242	5 L	60 L	B	
	Vinyl chloride, inhibited *or* Vinyl chloride, stabilized.	2.1	UN1086		2.1	21, B44	306	304	314, 315.	Forbidden	150 kg	B	40
	Vinyl chloroacetate	6.1	UN2589	II	6.1, 3	T14	None	202	243	5 L	60 L	A	
	Vinyl ethyl ether, inhibited	3	UN1302	I	3	A3, B100, T14	None	201	243	1 L	30 L	D	
	Vinyl fluoride, inhibited	2.1	UN1860		2.1		306	304	314, 315.	Forbidden	150 kg	E	40
	Vinyl isobutyl ether, inhibited	3	UN1304	II	3	T8	150	202	242	5 L	60 L	B	
	Vinyl methyl ether, inhibited	2.1	UN1087		2.1	B44	306	304	314, 315.	Forbidden	150 kg	B	40
	Vinyl nitrate polymer	Forbidden											
	Vinyltoluenes, inhibited	3	UN2618	III	3	B1, T1	150	203	242	60 L	220 L	A	
	Vinylidene chloride, inhibited	3	UN1303	I	3	T23, T29	150	201	243	1 L	30 L	E	40
	Vinylpyridines, inhibited	6.1	UN3073	II	6.1, 3, 8.	B100, T8	None	202	243	1 L	30 L	B	40
	Vinyltrichlorosilane, inhibited	3	UN1305	I	3, 8	A3, A7, B6, N34, T14, T26	None	201	243	Forbidden	2.5 L	B	40
	Warheads, rocket *with burster or expelling charge.*	1.4D	UN0370	II	1.4D		None	62	None	Forbidden	75 kg	A	3E, 7E, 24E
	Warheads, rocket *with burster or expelling charge.*	1.4F	UN0371	II	1.4F		None	62	None	Forbidden	Forbidden	E	
	Warheads, rocket *with bursting charge.*	1.1D	UN0286	II	1.1D		None	62	None	Forbidden	Forbidden	B	3E, 7E
	Warheads, rocket *with bursting charge.*	1.2D	UN0287	II	1.2D		None	62	None	Forbidden	Forbidden	B	3E, 7E

§172.101 HAZARDOUS MATERIALS TABLE—Continued

Symbols	Hazardous materials descriptions and proper shipping names	Hazard class or Division	Identification Numbers	PG	Label Codes	Special provisions	(8) Packaging (§173.***)			(9) Quantity limitations		(10) Vessel stowage	
							Exceptions	Nonbulk	Bulk	Passenger aircraft/rail	Cargo aircraft only	Location	Other
(1)	(2)	(3)	(4)	(5)	(6)	(7)	(8A)	(8B)	(8C)	(9A)	(9B)	(10A)	(10B)
	Warheads, rocket *with bursting charge.*	1.1F	UN0369	II	1.1F ...		None	62	None ..	Forbidden	Forbidden	E	
	Warheads, torpedo *with bursting charge.*	1.1D	UN0221	II	1.1D ...		None	62	None ..	Forbidden	Forbidden	B	3E, 7E
	Water-reactive liquid, corrosive, n.o.s	4.3	UN3129	I	4.3, 8		None	201	243	Forbidden	1 L	D	
	.....	.....		II	4.3, 8	B106	None	202	243	1 L	5 L	E	85
	.....	.....		III	4.3, 8	B106	None	203	242	5 L	60 L	E	
	Water-reactive liquid, n.o.s	4.3	UN3148	I	4.3		None	201	244	Forbidden	1 L	E	40
	.....	.....		II	4.3	B106	None	202	243	1 L	5 L	E	40
	.....	.....		III	4.3	B106	None	203	242	5 L	60 L	E	40
	Water-reactive liquid, toxic, n.o.s	4.3	UN3130	I	4.3, 6.1.	A4	None	201	243	Forbidden	1 L	D	
	.....	.....		II	4.3, 6.1.	B106	None	202	243	1 L	5 L	E	85
	.....	.....		III	4.3, 6.1.	B106	None	203	242	5 L	60 L	E	85
	Water-reactive solid, corrosive, n.o.s	4.3	UN3131	I	4.3, 8	B101, B106, N40	None	211	242	Forbidden	15 kg	D	
	.....	.....		II	4.3, 8	128, B101, B106	151	212	242	15 kg	50 kg	E	85
	.....	.....		III	4.3, 8	128, B105, B106	151	213	241	25 kg	100 kg	E	85
	Water-reactive solid, flammable, n.o.s.	4.3	UN3132	I	4.3, 4.1.	B101, B106, N40	None	211	242	Forbidden	15 kg	E	
	.....	.....		II	4.3, 4.1.	B101, B106	151	212	242	15 kg	50 kg	E	
	.....	.....		III	4.3, 4.1.	B105, B106	151	213	241	25 kg	100 kg	E	
	Water-reactive solid, n.o.s	4.3	UN2813	I	4.3	B101, B106, N40	None	211	242	Forbidden	15 kg	E	40
	.....	.....		II	4.3	B101, B106	151	212	242	15 kg	50 kg	E	40
	.....	.....		III	4.3	B105, B106	151	213	241	25 kg	100 kg	E	40
	Water-reactive solid, oxidizing, n.o.s	4.3	UN3133		4.3, 5.1.		None	214	214	Forbidden	Forbidden		
	Water-reactive solid, self-heating, n.o.s.	4.3	UN3135	I	4.3, 4.2.	B100, N40	None	211	242	Forbidden	15 kg	E	
	.....	.....		II	4.3, 4.2.	B101, B106	None	212	242	15 kg	50 kg	E	
	.....	.....		III	4.3, 4.2.	B101, B106	None	213	241	25 kg	100 kg	E	
	Water-reactive solid, toxic, n.o.s	4.3	UN3134	I	4.3, 6.1.	A8, B101, B106, N40	None	211	242	Forbidden	15 kg	D	

	.....	.....		II	4.3, 6.1.	B105, B106	151	212	242	15 kg	50 kg	E	85
	.....	.....		III	4.3, 6.1.	B105, B106	151	213	241	25 kg	100 kg	E	85
AD	Wheel chair, electric *(spillable or non-spillable type batteries).*	9		III	9		222	222	None ..	No limit	No limit	A	
	White acid, see Hydrofluoric acid mixtures.	.....			.....		.....	.....	.....	.....	.....		
I	White asbestos *(chrysotile, actinolite, anthophyllite, tremolite).*	9	UN2590	III	9		155	216	240	200 kg	200 kg	A	34, 40
	Wood preservatives, liquid	3	UN1306	II	3	T7, T30	150	202	242	5 L	60 L	B	40
	.....	.....		III	3	B1, T7, T30	150	203	242	60 L	220 L	A	40
	Xenon, compressed	2.2	UN2036		2.2		306	302	None ..	75 kg	150 kg	A	
	Xenon, refrigerated liquid *(cryogenic liquids).*	2.2	UN2591		2.2		320	None ..	None ..	50 kg	500 kg	B	
	Xylenes	3	UN1307	II	3	T1	150	202	242	5 L	60 L	B	
	.....	.....		III	3	B1, T1	150	203	242	60 L	220 L	A	
	Xylenols	6.1	UN2261	II	6.1	T8	None	212	242	25 kg	100 kg	A	
	Xylidines, solid	6.1	UN1711	II	6.1	T14	None	212	242	25 kg	100 kg	A	
	Xylidines, solution	6.1	UN1711	II	6.1	T14	None	202	243	5 L	60 L	A	
	Xylyl bromide	6.1	UN1701	II	6.1	A3, A6, A7, N33	None	340	None ..	Forbidden	60 L	D	40
	p-Xylyl diazide	Forbidden			.....		.....	.....	.....	.....	.....		
	Zinc ammonium nitrite	5.1	UN1512	II	5.1		None	212	242	5 kg	25 kg	E	
	Zinc arsenate *or* Zinc arsenite *or* Zinc arsenate and zinc arsenite mixtures..	6.1	UN1712	II	6.1		None	212	242	25 kg	100 kg	A	
	Zinc ashes	4.3	UN1435	III	4.3	A1, A19, B108	151	213	241	25 kg	100 kg	A	
	Zinc bisulfite solution, see Bisulfites, inorganic aqueous solutions, n.o.s.	.....			.....		.....	.....	.....	.....	.....		
	Zinc bromate	5.1	UN2469	III	5.1	A1, A29	152	213	240	25 kg	100 kg	A	56, 58, 106
	Zinc chlorate	5.1	UN1513	II	5.1	A9, N34	152	212	242	5 kg	25 kg	A	56, 58, 106
	Zinc chloride, anhydrous	8	UN2331	III	8		None	213	240	25 kg	100 kg	A	
	Zinc chloride, solution	8	UN1840	III	8	T7	154	203	241	5 L	60 L	A	
	Zinc cyanide	6.1	UN1713	I	6.1		None	211	242	5 kg	50 kg	A	26
	Zinc dithionite *or* Zinc hydrosulfite	9	UN1931	III	None ..		155	204	240	100 kg	200 kg	A	49
	Zinc ethyl, see Diethylzinc	.....			.....		.....	.....	.....	.....	.....		
	Zinc fluorosilicate	6.1	UN2855	III	6.1		153	213	240	100 kg	200 kg	A	26
	Zinc hydrosulfite, *see* Zinc dithionite	.....			.....		.....	.....	.....	.....	.....		
	Zinc muriate solution, see Zinc chloride, solution.	.....			.....		.....	.....	.....	.....	.....		
	Zinc nitrate	5.1	UN1514	II	5.1		152	212	240	5 kg	25 kg	A	
	Zinc permanganate	5.1	UN1515	II	5.1		152	212	242	5 kg	25 kg	D	56, 58, 69, 106, 107
	Zinc peroxide	5.1	UN1516	II	5.1		152	212	242	5 kg	25 kg	A	13, 75, 106

§172.101 HAZARDOUS MATERIALS TABLE—Continued

Symbols	Hazardous materials descriptions and proper shipping names	Hazard class or Division	Identification Numbers	PG	Label Codes	Special provisions	(8) Packaging (§173.***)			(9) Quantity limitations		(10) Vessel stowage	
							Exceptions	Non-bulk	Bulk	Passenger aircraft/rail	Cargo aircraft only	Location	Other
(1)	(2)	(3)	(4)	(5)	(6)	(7)	(8A)	(8B)	(8C)	(9A)	(9B)	(10A)	(10B)
	Zinc phosphide	4.3	UN1714	I	4.3, 6.1.	A19, N40	None	211	None	Forbidden	15 kg	E	40, 85
	Zinc powder *or* Zinc dust	4.3	UN1436	I	4.3, 4.2.	A19, B109, N40	None	211	242	Forbidden	15 kg	A	
				II	4.3, 4.2.	A19, B109	None	212	242	15 kg	50 kg	A	
				III	4.3, 4.2.	B108	None	213	242	25 kg	100 kg	A	
	Zinc resinate	4.1	UN2714	III	4.1	A1	151	213	240	25 kg	100 kg	A	
	Zinc selenate, see Selenates *or* Selenites.												
	Zinc selenite, see Selenates *or* Selenites.												
	Zinc silicofluoride, see Zinc fluorosilicate.												
	Zirconium, dry, *coiled wire, finished metal sheets, strip (thinner than 254 microns but not thinner than 18 microns).*	4.1	UN2858	III	4.1	A1	151	213	240	25 kg	100 kg	A	
	Zirconium, dry, *finished sheets, strip or coiled wire.*	4.2	UN2009	III	4.2	A1, A19	None	213	240	25 kg	100 kg	D	
	Zirconium hydride	4.1	UN1437	II	4.1	A19, A20, N34	None	212	240	15 kg	50 kg	E	
	Zirconium nitrate	5.1	UN2728	III	5.1	A1, A29	152	213	240	25 kg	100 kg	A	
	Zirconium picramate, *dry or wetted with less than 20 percent water, by mass.*	1.3C	UN0236	II	1.3C		None	62	None	Forbidden	Forbidden	B	1E, 5E
	Zirconium picramate, wetted *with not less than 20 percent water, by mass.*	4.1	UN1517	I	4.1	23, N41	None	211	None	1 kg	15 kg	D	28, 36
	Zirconium powder, dry	4.2	UN2008	I	4.2		None	211	242	Forbidden	Forbidden	D	
				II	4.2	A19, A20, N5, N34	None	212	241	15 kg	50 kg	D	
				III	4.2		None	213	241	25 kg	100 kg	D	

	Zirconium powder, wetted *with not less than 25 percent water (a visible excess of water must be present) (a) mechanically produced, particle size less than 53 microns; (b) chemically produced, particle size less than 840 microns.*	4.1	UN1358	II	4.1	A19, A20, N34	None	212	241	15 kg	50 kg	E	
	Zirconium scrap	4.2	UN1932	III	4.2	N34	None	213	240	Forbidden	Forbidden	D	
D	Zirconium sulfate	8	NA9163	III	8	N34	None	213	240	50 kg	No limit	A	
	Zirconium suspended in a liquid	3	UN1308	I	3		None	201	243	Forbidden	Forbidden	B	
	.....	.....		II	3		None	202	242	5 L	60 L	B	
	.....	.....		III	3	B1	150	203	242	60 L	220 L	B	
	Zirconium tetrachloride	8	UN2503	III	8		154	213	240	25 kg	100 kg	A	

EDITORIAL NOTE: For FEDERAL REGISTER citations affecting §171.101, see the List of CFR Sections Affected in the Finding Aids section of this volume.

EFFECTIVE DATE NOTE: At 62 FR 39404, July 22, 1997, in § 172.101(g), the entries for label codes 6.1 in the Label Substitution Table were revised, effective Oct. 1, 1998. For the convenience of the user, the revised text is set forth as follows:

§ 172.101 Purpose and use of hazardous materials table.

* * * * *

(g) * * *

LABEL SUBSTITUTION TABLE

Label code	Label name
* * * * *	
6.1 (inhalation hazard, Zone A or B).	Poison Inhalation Hazard.
6.1 (I or II, other than Zone A or B inhalation hazard)[2].	Poison.
6.1 (III)[2]	Keep Away From Food.
* * * * *	

* * * * *

[2] The packing group for a material is indicated in column 5 of the table.

* * * * *

APPENDIX A TO § 172.101—LIST OF HAZARDOUS SUBSTANCES AND REPORTABLE QUANTITIES

1. This Appendix lists materials and their corresponding reportable quantities (RQ's) that are listed or designated as ''hazardous substances'' under section 101(14) of the Comprehensive Environmental Response, Compensation, and Liability Act, 42 U.S.C. 9601(14) (CERCLA; 42 U.S.C. 9601 *et seq*). This listing fulfills the requirement of CERCLA, 42 U.S.C. 9656(a), that all ''hazardous substances,'' as defined in 42 U.S.C. 9601(14), be listed and regulated as hazardous materials under 49 U.S.C. 5101–5127. That definition includes substances listed under sections 311(b)(2)(A) and 307(a) of the Federal Water Pollution Control Act, 33 U.S.C. 1321(b)(2)(A) and 1317(a), section 3001 of the Solid Waste Disposal Act, 42 U.S.C. 6921, and section 112 of the Clean Air Act, 42 U.S.C. 7412. In addition, this list contains materials that the Administrator of the Environmental Protection Agency has determined to be hazardous substances in accordance with section 102 of CERCLA, 42 U.S.C. 9602. It should be noted that 42 U.S.C. 9656(b) provides that common and contract carriers may be held liable under laws other than CERCLA for the release of a hazardous substance as defined in that Act, during transportation that commenced before the effective date of the listing and regulating of that substance as a hazardous material under 49 U.S.C. 5101–5127.

2. This Appendix is divided into two TABLES which are entitled ''TABLE 1—HAZARDOUS SUBSTANCES OTHER THAN RADIONUCLIDES'' and ''TABLE 2—RADIONUCLIDES.'' A material listed in this Appendix is regulated as a hazardous material and a hazardous substance under this subchapter if it meets the definition of a hazardous substance in § 171.8 of this subchapter.

3. The procedure for selecting a proper shipping name for a hazardous substance is set forth in § 172.101(c)(8).

4. Column 1 of TABLE 1, entitled *''Hazardous substance''*, contains the names of those elements and compounds that are hazardous substances. Following the listing of elements and compounds is a listing of waste streams. These waste streams appear on the list in numerical sequence and are referenced by the appropriate ''D'', ''F'', or ''K'' numbers. Column 2 of TABLE 1, entitled *''Reportable quantity (RQ)''*, contains the reportable quantity (RQ), in pounds and kilograms, for each hazardous substance listed in Column 1 of TABLE 1.

5. A series of notes is used throughout TABLE 1 and TABLE 2 to provide additional information concerning certain hazardous substances. These notes are explained at the end of each TABLE.

6. TABLE 2 lists radionuclides that are hazardous substances and their corresponding RQ's. The RQ's in Table 2 for radionuclides are expressed in units of curies and terabecquerels, whereas those in Table 1 are expressed in units of pounds and kilograms. If a material is listed in both Table 1 and Table 2, the lower RQ shall apply. Radionuclides are listed in alphabetical order. The RQ's for radionuclides are given in the radiological unit of measure of curie, abbreviated ''Ci'', followed, in parentheses, by an equivalent unit measured in terabecquerels, abbreviated ''TBq''.

7. For mixtures of radionuclides, the following requirements shall be used in determining if a package contains an RQ of a hazardous substance: (i) if the identity and quantity (in curies or terabecquerels) of each radionuclide in a mixture or solution is known, the ratio between the quantity per package (in curies or terabecquerels) and the RQ for the radionuclide must be determined for each radionuclide. A package contains an RQ of a hazardous substance when the sum of the ratios for the radionuclides in the mixture or solution is equal to or greater than one; (ii) if the identity of each radionuclide in a mixture or solution is known but the quantity per package (in curies or terabecquerels) of one or more of the radionuclides is unknown, an RQ of a hazardous substance is present in a package when the total quantity (in curies or terabecquerels) of the mixture or solution is equal to or greater than the lowest RQ of any individual radionuclide in the mixture or solution; and

(iii) if the identity of one or more radionuclides in a mixture or solution is unknown (or if the identity of a radionuclide by itself is unknown), an RQ of a hazardous substance is present when the total quantity (in curies or terabecquerels) in a package is equal to or greater than either one curie or the lowest RQ of any known individual radionuclide in the mixture or solution, whichever is lower.

TABLE 1.—HAZARDOUS SUBSTANCES OTHER THAN RADIONUCLIDES

Hazardous substance	Reportable quantity (RQ) pounds (kilograms)
Acenaphthene	100 (45.4)
Acenaphthylene	5000 (2270)
Acetaldehyde	1000 (454)
Acetaldehyde, chloro-	1000 (454)
Acetaldehyde, trichloro-	5000 (2270)
Acetamide	100 (45.4)
Acetamide, N-(aminothioxomethyl)-	1000 (454)
Acetamide, N-(4-ethoxyphenyl)-	100 (45.4)
Acetamide, N-fluoren-2-yl-	1 (0.454)
Acetamide, 2-fluoro-	100 (45.4)
Acetic acid	5000 (2270)
Acetic acid (2,4-dichlorophenoxy)-	100 (45.4)
Acetic acid, ethyl ester	5000 (2270)
Acetic acid, fluoro-, sodium salt	10 (4.54)
Acetic acid, lead (2+) salt	10 (4.54)
Acetic acid, thallium(I+) salt	1000 (454)
Acetic anhydride	5000 (2270)
Acetone	5000 (2270)
Acetone cyanohydrin	10 (4.54)
Acetonitrile	5000 (2270)
Acetophenone	5000 (2270)
2-Acetylaminofluorene	1 (0.454)
Acetyl bromide	5000 (2270)
Acetyl chloride	5000 (2270)
1-Acetyl-2-thiourea	1 (0.454)
Acrylamide	5000 (2270)
Acrylic acid	5000 (2270)
Acrylonitrile	100 (45.4)
Adipic acid	5000 (2270)
AldicarbD1 (0.454).	
Aldrin	1 (0.454)
Allyl alcohol	100 (45.4)
Allyl chloride	1000 (454)
Aluminum phosphide	100 (45.4)
Aluminum sulfate	5000 (2270)
4–Aminobiphenyl	1 (0.454)
5-(Aminomethyl)-3-isoxazolol	1000 (454)
4-Aminopyridine	1000 (454)
Amitrole	10 (4.54)
Ammonia	100 (45.4)
Ammonium acetate	5000 (2270)
Ammonium benzoate	5000 (2270)
Ammonium bicarbonate	5000 (2270)
Ammonium bichromate	10 (4.54)
Ammonium bifluoride	100 (45.4)
Ammonium bisulfite	5000 (2270)
Ammonium carbamate	5000 (2270)
Ammonium carbonate	5000 (2270)
Ammonium chloride	5000 (2270)
Ammonium chromate	10 (4.54)
Ammonium citrate, dibasic	5000 (2270)
Ammonium dichromate @	10 (4.54)
Ammonium fluoborate	5000 (2270)
Ammonium fluoride	100 (45.4)
Ammonium hydroxide	1000 (454)
Ammonium oxalate	5000 (2270)
Ammonium picrate	10 (4.54)
Ammonium silicofluoride	1000 (454)
Ammonium sulfamate	5000 (2270)
Ammonium sulfide	100 (45.4)
Ammonium sulfite	5000 (2270)
Ammonium tartrate	5000 (2270)
Ammonium thiocyanate	5000 (2270)

TABLE 1.—HAZARDOUS SUBSTANCES OTHER THAN RADIONUCLIDES—Continued

Hazardous substance	Reportable quantity (RQ) pounds (kilograms)
Ammonium vanadate	1000 (454)
Amyl acetate	5000 (2270)
iso-Amyl acetate	.....
sec-Amyl acetate	.....
tert-Amyl acetate	.....
Aniline	5000 (2270)
o-Anisidine	100 (45.4)
Anthracene	5000 (2270)
Antimony ¢	5000 (2270)
Antimony pentachloride	1000 (454)
Antimony potassium tartrate	100 (45.4)
Antimony tribromide	1000 (454)
Antimony trichloride	1000 (454)
Antimony trifluoride	1000 (454)
Antimony trioxide	1000 (454)
Argentate(1-), bis(cyano-C)-, potassium	1 (0.454)
Aroclor 1016	1 (0.454)
Aroclor 1221	1 (0.454)
Aroclor 1232	1 (0.454)
Aroclor 1242	1 (0.454)
Aroclor 1248	1 (0.454)
Aroclor 1254	1 (0.454)
Aroclor 1260	1 (0.454)
Arsenic ¢	1 (0.454)
Arsenic acid	1 (0.454)
Arsenic acid H3AsO4	1 (0.454)
Arsenic disulfide	1 (0.454)
Arsenic oxide As203	1 (0.454)
Arsenic oxide As205	1 (0.454)
Arsenic pentoxide	1 (0.454)
Arsenic trichloride	1 (0.454)
Arsenic trioxide	1 (0.454)
Arsenic trisulfide	1 (0.454)
Arsine, diethyl-	1 (0.454)
Arsinic acid, dimethyl-	1 (0.454)
Arsonous dichloride, phenyl-	1 (0.454)
Asbestos ¢¢	1 (0.454)
Auramine100 (45.4).	
Azaserine	1 (0.454)
Aziridine	1 (0.454)
Aziridine, 2-methyl-	1 (0.454)
Azirino[2',3':3,4]pyrrolo(1,2-a)indole-4,7-dione,6- amino-8-[[(aminocarbonyl)oxy] methyl]-1,1a,2,8,8a, 8b-hexahydro-8a-methoxy-5-methyl-, [1aS-[aalpha,8beta,8aalpha,8balpha)]-	10 (4.54)
Barium cyanide	10 (4.54)
Benz[j]aceanthrylene, 1,2-dihydro-3-methyl-	10 (4.54)
Benz[c]acridine	100 (45.4)
3,4-Benzacridine	100 (45.4)
Benzal chloride	5000 (2270)
Benzamide, 3,5-dichloro-N-(1,1-dimethyl-2-propynyl)	5000 (2270)
Benz[a]anthracene	10 (4.54)
1,2-Benzanthracene	10 (4.54)
Benz[a]anthracene, 7,12-dimethyl-	1 (0.454)
Benzenamine	5000 (2270)
Benzenamine, 4,4'-carbonimidoylbis (N,N-dimethyl-	100 (45.4)
Benzenamine, 4-chloro-	1000 (454)
Benzenamine, 4-chloro-2-methyl-, hydrochloride	100 (45.4)
Benzenamine, N,N-dimethyl-4-(phenylazo)-	10 (4.54)
Benzenamine, 2-methyl-	100 (45.4)
Benzenamine, 4-methyl-	100 (45.4)
Benzenamine, 4,4'-methylenebis(2-chloro-	10 (4.54)
Benzenamine, 2-methyl-, hydrochloride	100 (45.4)
Benzenamine, 2-methyl-5-nitro-	100 (45.4)
Benzenamine, 4-nitro-	5000 (2270)
Benzene	10 (4.54)
Benzene, 1-bromo-4-phenoxy-	100 (45.4)
Benzene, chloro-	100 (45.4)
Benzene, chloromethyl-	100 (45.4)
Benzene, 1,2-dichloro-	100 (45.4)
Benzene, 1,3-dichloro-	100 (45.4)
Benzene, 1,4-dichloro-	100 (45.4)

TABLE 1.—HAZARDOUS SUBSTANCES OTHER THAN RADIONUCLIDES—Continued

Hazardous substance	Reportable quantity (RQ) pounds (kilograms)
Benzene, 1,1'-(2,2-dichloroethylidene)bis[4-chloro	1 (0.454)
Benzene, dichloromethyl-	5000 (2270)
Benzene, 1,3-diisocyanatomethyl	100 (45.4)
Benzene, dimethyl-	100 (45.4)
Benzene, m-dimethyl-	1000 (454)
Benzene, o-dimethyl-	1000 (454)
Benzene, p-dimethyl-	100 (45.4)
Benzene, hexachloro-	10 (4.54)
Benzene, hexahydro-	1000 (454)
Benzene, hydroxy-	1000 (454)
Benzene, methyl-	1000 (454)
Benzene, 1-methyl-2,4-dinitro-	10 (4.54)
Benzene, 2-methyl-1,3-dinitro-	100 (45.4)
Benzene, 1-methylethyl-	5000 (2270)
Benzene, nitro-	1000 (454)
Benzene, pentachloro-	10 (4.54)
Benzene, pentachloronitro-	100 (45.4)
Benzene, 1,2,4,5-tetrachloro-	5000 (2270)
Benzene, 1,1'-(2,2,2-trichloroethylidene)bis[4-chloro-	1 (0.454)
Benzene, 1,1'-(2,2,2-trichloroethylidene)bis[4-methoxy)-	1 (0.454)
Benzene, (trichloromethyl)	10 (4.54)
Benzene, 1,3,5-trinitro-	10 (4.54)
Benzeneacetic acid, 4-chloro-alpha-(4-chlorophenyl)-alpha-hydroxy-, ethyl ester	10 (4.54)
Benzenebutanoic acid, 4-[bis(2-chloroethyl)amino]-	10 (4.54)
Benzenediamine, ar-methyl-	10 (4.54)
1,2-Benzenedicarboxylic acid, [bis(2-ethylhexyl)] ester	100 (45.4)
1,2-Benzenedicarboxylic acid, dibutyl ester	10 (4.54)
1,2-Benzenedicarboxylic acid, diethyl ester	1000 (454)
1,2-Benzenedicarboxylic acid, dimethyl ester	5000 (2270)
1,2-Benzenedicarboxylic acid, dioctyl ester	5000 (2270)
1,3-Benzenediol	5000 (2270)
1,2-Benzenediol,4-[1-hydroxy-2-(methylamino)ethyl]-	1000 (454)
Benzeneethanamine, alpha,alpha-dimethyl-	5000 (2270)
Benzeneethanamine, alpha,alpha-dimethyl-	5000 (2270)
Benzenesulfonic acid chloride	100 (45.4)
Benzenesulfonyl chloride	100 (45.4)
Benzenethiol	100 (45.4)
Benzidine	1 (0.454)
1,2-Benzisothiazol-3(2H)-one,1,1-dioxide	100 (45.4)
Benzo[a]anthracene	10 (4.54)
1,3-Benzodioxole, 5-(2-propenyl)-	100 (45.4)
1,3-Benzodioxole, 5-(1-propenyl)-	100 (45.4)
1,3-Benzodioxole, 5-propyl-	10 (4.54)
Benzo[b]fluoranthene	1 (0.454)
Benzo[k]fluoranthene	5000 (2270)
Benzo[j,k]fluorene	100 (45.4)
Benzoic acid	5000 (2270)
Benzonitrile	5000 (2270)
Benzo[g,h,i]perylene	5000 (2270)
2H-1-Benzopyran-2-one, 4-hydroxy-3-(3-oxo-1-phenyl-butyl)-, & salts, when present at concentrations greater than 0.3%	100 (45.4)
Benzo[a]pyrene	1 (0.454)
3,4-Benzopyrene	1 (0.454)
p-Benzoquinone	10 (4.54)
Benzo [rst]pentaphene	10 (4.54)
Benzotrichloride	10 (4.54)
Benzoyl chloride	1000 (454)
1,2-Benzphenanthrene	100 (45.4)
Benzyl chloride	100 (45.4)
Beryllium ¢	10 (4.54)
Beryllium chloride	1 (0.454)
Beryllium dust ¢	10 (4.54)
Beryllium fluoride	1 (0.454)
Beryllium nitrate	1 (0.454)
alpha - BHC	10 (4.54)
beta - BHC	1 (0.454)
delta - BHC	1 (0.454)
gamma - BHC	1 (0.454)
2,2'Bioxirane	10 (4.54)
Biphenyl	100 (45.4)

TABLE 1.—HAZARDOUS SUBSTANCES OTHER THAN RADIONUCLIDES—Continued

Hazardous substance	Reportable quantity (RQ) pounds (kilograms)
(1,1'-Biphenyl)-4,4'-diamine	1 (0.454)
(1,1'-Biphenyl)-4,4'-diamine,3,3'-dichloro-	1 (0.454)
(1,1'-Biphenyl)-4,4'-diamine,3,3'-dimethoxy-	10 (4.54)
(1,1'-Biphenyl)-4,4'-diamine,3,3'-dimethyl-	10 (4.54)
Bis(2-chloroethoxy) methane	1000 (454)
Bis(2-chloroethyl) ether	10 (4.54)
Bis(2-ethylhexyl)phthalate	100 (45.4)
Bromoacetone	1000 (454)
Bromoform	100 (45.4)
4-Bromophenyl phenyl ether	D100 (45.4).
Brucine	100 (45.4)
1,3–Butadiene	10 (4.54)
1,3-Butadiene, 1,1,2,3,4,4-hexachloro-	1 (0.454)
1-Butanamine, N-butyl-N-nitroso-	10 (4.54)
1-Butanol	5000 (2270)
2-Butanone	5000 (2270)
2-Butanone, 3,3-dimethyl-1-(methylthio)-,O-[(methylamino)carbonyl] oxime	100 (45.4)
2-Butanone peroxide	10 (4.54)
2-Butenal	100 (45.4)
2-Butene, 1,4-dichloro-	1 (0.454)
2-Butenoic acid, 2-methyl-,7[[2,3-dihydroxy-2-(1-methoxyethyl)-3-methyl-1-oxobutoxy]methyl]-2,3,5,7a-tetrahydro-1H-pyrrolizin-1-yl ester, [1S-[1alpha(Z),7(2S*, 3R*), 7aalpha]]-	10 (4.54)
Butyl acetate	5000 (2270)
iso-Butyl acetate	.....
sec-Butyl acetate	.....
tert-Butyl acetate	.....
n-Butyl alcohol	5000 (2270)
Butylamine	1000 (454)
iso-Butylamine	.....
sec-Butylamine	.....
tert-Butylamine	.....
Butyl benzyl phthalate	100 (45.4)
n-Butyl phthalate	10 (4.54)
Butyric acid	5000 (2270)
iso-Butyric acid	.....
Cacodylic acid	1 (0.454)
Cadmium ¢	10 (4.54)
Cadmium acetate	10 (4.54)
Cadmium bromide	10 (4.54)
Cadmium chloride	10 (4.54)
Calcium arsenate	1 (0.454)
Calcium arsenite	1 (0.454)
Calcium carbide	10 (4.54)
Calcium chromate	10 (4.54)
Calcium cyanamide	1000 (454)
Calcium cyanide	10 (4.54)
Calcium cyanide Ca(CN)2	10 (4.54)
Calcium dodecylbenzene sulfonate	1000 (454)
Calcium hypochlorite	10 (4.54)
Camphene, octachloro-	1 (0.454)
Caprolactam	5000 (2270)
Captan	10 (4.54)
Carbamic acid, ethyl ester	100 (45.4)
Carbamic acid, methylnitroso-, ethyl ester	1 (0.454)
Carbamic chloride, dimethyl-	1 (0.454)
Carbamide, thio-	10 (4.54)
Carbamimidoselenoic acid	1000 (454)
Carbamothioic acid, bis (1-methylethyl)-, S-(2,3-dichloro-2-propenyl) ester	100 (45.4)
Carbaryl	100 (45.4)
Carbofuran	10 (4.54)
Carbon bisulfide	100 (45.4)
Carbon disulfide	100 (45.4)
Carbonic acid, dithallium (I+)	100 (45.4)
Carbonic dichloride	10 (4.54)
Carbonic difluoride	1000 (454)
Carbonochloridic acid, methyl ester	1000 (454)
Carbon oxyfluoride	1000 (454)
Carbon tetrachloride	10 (4.54)
Carbonyl sulfide	100 (45.4)
Catechol	100 (45.4)

TABLE 1.—HAZARDOUS SUBSTANCES OTHER THAN RADIONUCLIDES—Continued

Hazardous substance	Reportable quantity (RQ) pounds (kilograms)
Chloral	5000(2270)
Chloramben	100 (45.4)
Chlorambucil	10 (4.54)
Chlordane	1 (0.454)
Chlordane, alpha & gamma isomers	1 (0.454)
Chlordane, technical	1 (0.454)
Chlorine	10 (4.54)
Chlornaphazine	100 (45.4)
Chloroacetaldehyde	1000 (454)
Chloroacetic acid	100 (45.4)
2–Chloroacetophenone	100 (45.4)
p-Chloroaniline	1000 (454)
Chlorobenzene	100 (45.4)
Chlorobenzilate	10 (4.54)
4-Chloro-m-cresol	5000 (2270)
p-Chloro-m-cresol	5000 (2270)
Chlorodibromomethane	100 (45.4)
Chloroethane	100 (45.4)
2-Chloroethyl vinyl ether	1000 (454)
Chloroform	10 (4.54)
Chloromethane	100 (45.4)
Chloromethyl methyl ether	1 (0.454)
beta-Chloronaphthalene	5000 (2270)
2-Chloronaphthalene	5000 (2270)
2-Chlorophenol	100 (45.4)
o-Chlorophenol	100 (45.4)
4-Chlorophenyl phenyl ether	5000 (2270)
1-(o-Chlorophenyl)thiourea	100 (45.4)
Chloroprene	100 (45.4)
3-Chloropropionitrile	1000 (454)
Chlorosulfonic acid	1000 (454)
4-Chloro-o-toluidine, hydrochloride	100 (45.4)
Chlorpyrifos	1 (0.454)
Chromic acetate	1000 (454)
Chromic acid	10 (4.54)
Chromic acid H2CrO4, calcium salt	10 (4.54)
Chromic sulfate	1000 (454)
Chromium ¢	5000 (2270)
Chromous chloride	1000 (454)
Chrysene	100 (45.4)
Cobaltous bromide	1000 (454)
Cobaltous formate	1000 (454)
Cobaltous sulfamate	1000 (454)
Coke Oven Emissions	1 (0.454)
Copper ¢	5000 (2270)
Copper chloride @	10 (4.54)
Copper cyanide	10 (4.54)
Copper cyanide CuCN	10 (4.54)
Coumaphos	10 (4.54)
Creosote	1 (0.454)
Cresols (isomers and mixture)	100 (45.4)
m-Cresol	100 (45.4)
o-Cresolo	100 (45.4)
p-Cresol	100 (45.4)
Cresylic acid (isomers and mixture)	100 (45.4)
m-Cresylic acid	100 (45.4)
o-Cresylic acid	100 (45.4)
p-Cresylic acid	100 (45.4)
Crotonaldehyde	100 (45.4)
Cumene	5000 (2270)
Cupric acetate	100 (45.4)
Cupric acetoarsenite	1 (0.454)
Cupric chloride	10 (4.54)
Cupric nitrate	100 (45.4)
Cupric oxalate	100 (45.4)
Cupric sulfate	10 (4.54)
Cupric sulfate ammoniated	100 (45.4)
Cupric tartrate	100 (45.4)
Cyanides (soluble salts and complexes) not otherwise specified	10 (4.54)
Cyanogen	100 (45.4)

TABLE 1.—HAZARDOUS SUBSTANCES OTHER THAN RADIONUCLIDES—Continued

Hazardous substance	Reportable quantity (RQ) pounds (kilograms)
Cyanogen bromide	1000 (454)
Cyanogen bromide (CN)Br	1000 (454)
Cyanogen chloride	10 (4.54)
Cyanogen chloride (CN)Cl	10 (4.54)
2,5-Cyclohexadiene-1,4-dione	10 (4.54)
Cyclohexane	1000 (454)
Cyclohexane, 1,2,3,4,5,6-hexachloro-, (1alpha,2alpha,3beta,4alpha,5alpha,6beta)-	1 (0.454)
Cyclohexanone	5000 (2270)
2-Cyclohexyl-4,6-dinitrophenol	100 (45.4)
1,3-Cyclopentadiene, 1,2,3,4,5,5-hexachloro-	10 (4.54)
Cyclophosphamide	10 (4.54)
2,4-D Acid	100 (45.4)
2,4-D Ester	100 (45.4)
Daunomycin	10 (4.54)
DDD	1 (0.454)
4,4'-DDD	1 (0.454)
DDE	5000 (2270)
4,4'-DDE	5000 (2270)
DDE	1 (0.454)
4,4'-DDE	1 (0.454)
DDT	1 (0.454)
4,4'-DDT	1 (0.454)
Diallate	100 (45.4)
Diamine	1 (0.454)
Diazinon	1 (0.454)
Diazomethane	100 (45.4)
Dibenz[a,h]anthracene	1 (0.454)
1,2:5,6-Dibenzanthracene	1 (0.454)
Dibenzo[a,h]anthracene	1 (0.454)
Dibenzofuran	100 (45.4)
Dibenz[a,i]pyrene	10 (4.54)
1,2-Dibromo-3-chloropropane	1 (0.454)
Dibutyl phthalate	10 (4.54)
Di-n-butyl phthalate	10 (4.54)
Dicamba	1000 (454)
Dichlobenil	100 (45.4)
Dichlone	1 (0.454)
Dichlorobenzene	100 (45.4)
1,2-Dichlorobenzene	100 (45.4)
1,3-Dichlorobenzene	100 (45.4)
1,4-Dichlorobenzene	100 (45.4)
m-Dichlorobenzene	100 (45.4)
o-Dichlorobenzene	100 (45.4)
p-Dichlorobenzene	100 (45.4)
3,3'-Dichlorobenzidine	1 (0.454)
Dichlorobromomethane	5000 (2270)
1,4-Dichloro-2-butene	1 (0.454)
Dichlorodifluoromethane	5000 (2270)
1,1-Dichloroethane	1000 (454)
1,2-Dichloroethane	100 (45.4)
1,1-Dichloroethylene	100 (45.4)
1,2-Dichloroethylene	1000 (454)
Dichloroethyl ether	10 (4.54)
Dichloroisopropyl—ether	1000 (454)
Dichloromethane @	1000 (454)
Dichloromethoxy ethane	1000 (454)
Dichloromethyl ether	1 (0.454)
2,4-Dichlorophenol	100 (45.4)
2,6-Dichlorophenol	100 (45.4)
Dichlorophenylarsine	1 (0.454)
Dichloropropane	1000 (454)
1,1-Dichloropropane	.....
1,3-Dichloropropane	.....
1,2-Dichloropropane	1000 (454)
Dichloropropane - Dichloropropene (mixture)	100 (45.4)
Dichloropropene	100 (45.4)
2,3-Dichloropropene	.....
1,3-Dichloropropene	100 (45.4)
2,2-Dichloropropionic acid	5000 (2270)
Dichlorvos	10 (4.54)

TABLE 1.—HAZARDOUS SUBSTANCES OTHER THAN RADIONUCLIDES—Continued

Hazardous substance	Reportable quantity (RQ) pounds (kilograms)
Dicofol	10 (4.54)
Dieldrin	1 (0.454)
1,2:3,4-Diepoxybutane	10 (4.54)
Diethanolamine	100 (45.4)
Diethylamine	1000 (454)
N,N-diethylaniline	1000 (454)
Diethylarsine	1 (0.454)
1,4-Diethylenedioxide	100 (45.4)
Diethylhexyl phthalate	100 (45.4)
N,N′-Diethylhydrazine	10 (4.54)
O,O-Diethyl S-methyl dithiophosphate	5000 (2270)
Diethyl-p-nitrophenyl phosphate	100 (45.4)
Diethyl phthalate	1000(454)
O,O-Diethyl O-pyrazinyl phosphorothioate	100 (45.4)
Diethylstilbestrol	1 (0.454)
Diethyl sulfate	10 (4.54)
Dihydrosafrole	10 (4.54)
Diisopropyl fluorophosphate	100 (45.4)
1,4,5,8-Dimethanonaphthalene, 1,2,3,4,10,10-hexachloro-1,4,4a,5,8,8a-hexahydro, (1alpha,4alpha,4abeta,5abeta,8beta,8abeta)-	1 (0.454)
1,4,5,8-Dimethanonaphthalene,1,2,3,4,10,10-10-hexachloro-1,4,4a,5,8,8a-hexahydro- ,(1alpha,4alpha,4abeta,5alpha,8alpha,8abeta)-	1 (0.454)
2,7:3,6-Dimethanonaphth[2,3-b]oxirene, 3,4,5,6,9,9-hexachloro-1a,2,2a,3,6,6a,7,7a- octahydro-,(1aalpha,2beta,2abeta,3alpha,6alpha,6abeta, 7beta,7aalpha)-	1 (0.454)
2,7:3,6-Dimethanonaphth[2,3-b]oxirene, 3,4,5,6,9,9-hexachloro-1a,2,2a,3,6,6a,7,7a- octahydro-,(1aalpha,2beta,2aalpha,3beta,6beta,6aalpha, 7beta,7aalpha)-	1 (0.454)
Dimethoate	10 (4.54)
3,3′-Dimethoxybenzidine	10 (4.54)
Dimethylamine	1000 (454)
p-Dimethylaminoazobenzene	10 (4.54)
N,N-dimethylaniline	100 (45.4)
7,12-Dimethylbenz[a]anthracene	1 (0.454)
3,3′-Dimethylbenzidine	10 (4.54)
alpha,alpha-Dimethylbenzylhydroperoxide	10 (4.54)
Dimethylcarbamoyl chloride	1 (0.454)
Dimethylformamide	100 (45.4)
1,1-Dimethylhydrazine	10 (4.54)
1,2-Dimethylhydrazine	1 (0.454)
Dimethylhydrazine, unsymmetrical @	10 (4.54)
alpha,alpha-Dimethylphenethylamine	5000 (2270)–
12,4-Dimethylphenol	100 (45.4)
Dimethyl phthalate	5000 (2270)
Dimethyl sulfate	100 (45.4)
Dinitrobenzene (mixed)	100 (45.4)
m-Dinitrobenzene	.....
o-Dinitrobenzene	.....
p-Dinitrobenzene.	
4,6-Dinitro-o-cresol and salts	10 (4.54)
Dinitrogen tetroxide @	10 (4.54)
Dinitrophenol	10 (4.54)
2,5-Dinitrophenol	.....
2,4-Dinitrophenol	10 (4.54)
Dinitrotoluene	10 (4.54)
3,4-Dinitrotoluene	.....
2,4-Dinitrotoluene	10 (4.54)
2,6-Dinitrotoluene	100 (45.4)
Dinoseb	1000 (454)
Di-n-octyl phthalate	5000 (2270)
1,4-Dioxane	100 (45.4)
1,2-Diphenylhydrazine	10 (4.54)
Diphosphoramide, octamethyl-	100 (45.4)
Diphosphoric acid, tetraethyl ester	10 (4.54)
Dipropylamine	5000 (2270)
Di-n-propylnitrosamine	10 (4.54)
Diquat	1000 (454)
Disulfoton	1 (0.454)
Dithiobiuret	100 (45.4)
Diuron	100 (45.4)

TABLE 1.—HAZARDOUS SUBSTANCES OTHER THAN RADIONUCLIDES—Continued

Hazardous substance	Reportable quantity (RQ) pounds (kilograms)
Dodecylbenzenesulfonic acid	1000 (454)
2,4-D, salts and esters	100 (45.4)
Endosulfan	1 (0.454)
alpha-Endosulfan	1 (0.454)
beta-Endosulfan	1 (0.454)
Endosulfan sulfate	1 (0.454)
Endothall	1000 (454)
Endrin	1 (0.454)
Endrin, & metabolites	1 (0.454)
Endrin aldehyde	1 (0.454)
Epichlorohydrin	100 (45.4)
Epinephrine	1000 (454)
1,2–Epoxybutane	100 (45.4)
Ethanal	1000 (454)
Ethanamine, N-ethyl-N-nitroso-	1 (0.454)
Ethane, 1,2-dibromo-	1 (0.454)
Ethane, 1,1-dichloro-	1000 (454)
Ethane, 1,2-dichloro-	100 (45.4)
Ethane, hexachloro-	100 (45.4)
Ethane, 1,1'-[methylenebis(oxy)]bis(2-chloro-	1000 (454)
Ethane, 1,1'-oxybis-	100 (45.4)
Ethane, 1,1'-oxybis(2-chloro-	10 (4.54)
Ethane, pentachloro-	10 (4.54)
Ethane, 1,1,1,2-tetrachloro-	100 (45.4)
Ethane, 1,1,2,2-tetrachloro-	100 (45.4)
Ethane, 1,1,2-trichloro-	100 (45.4)
Ethane, 1,1,1-trichloro-	1000 (454)
1,2-Ethanediamine, N,N-dimethyl-N'-2-pyridinyl-N'-(2-thienyl-methyl)-	5000 (2270)
Ethanedinitrile	100 (45.4)
Ethanenitrile	5000 (2270)
Ethanethioamide	10 (4.54)
Ethanimidothioic acid, N-[[(methylamino)carbonyl] oxy]-, methyl ester	100 (45.4)
Ethanol, 2-ethoxy-	1000 (454)
Ethanol, 2,2'-(nitrosoimino)bis-	1 (0.454)
Ethanone, 1-phenyl-	5000 (2270)
Ethanoyl chloride	5000 (2270)
Ethene, chloro-	1 (0.454)
Ethene, 2-chloroethoxy-	1000 (454)
Ethene, 1,1-dichloro-	100 (45.4)
Ethene, 1,2-dichloro- (E)	1000 (454)
Ethene, tetrachloro-	100 (45.4)
Ethene, trichloro-	100 (45.4)
Ethion	10 (4.54)
Ethyl acetate	5000 (2270)
Ethyl acrylate	1000 (454)
Ethylbenzene	1000 (454)
Ethyl carbamate (Urethan)	100 (45.4)
Ethyl chloride @	100 (45.4)
Ethyl cyanide	10 (4.54)
Ethylene dibromide	1 (0.454)
Ethylene dichloride	100 (45.4)
Ethylene glycol	5000 (2270)
Ethylene glycol monoethyl ether	1000 (454)
Ethylene oxide	10 (4.54)
Ethylenebisdithiocarbamic acid	5000 (2270)
Ethylenebisdithiocarbamic acid, salts and esters	5000 (2270)
Ethylenediamine	5000 (2270)
Ethylenediamine tetraacetic acid (EDTA)	5000 (2270)
Ethylenethiourea	10 (4.54)
Ethylenimine	1 (0.454)
Ethyl ether	100 (45.4)
Ethylidene dichloride	1000 (454)
Ethyl methacrylate	1000 (454)
Ethyl methanesulfonate	1 (0.454)
Ethyl methyl ketone @	5000 (2270)
Famphurdimethylester	1000 (454)
Ferric ammonium citrate	1000 (454)
Ferric ammonium oxalate	1000 (454)
Ferric chloride	1000 (454)
Ferric fluoride	100 (45.4)

TABLE 1.—HAZARDOUS SUBSTANCES OTHER THAN RADIONUCLIDES—Continued

Hazardous substance	Reportable quantity (RQ) pounds (kilograms)
Ferric nitrate	1000 (454)
Ferric sulfate	1000 (454)
Ferrous ammonium sulfate	1000 (454)
Ferrous chloride	100 (45.4)
Ferrous sulfate	1000 (454)
Fluoranthene	100 (45.4)
Fluorene	5000 (2270)
Fluorine	10 (4.54)
Fluoroacetamide	100 (45.4)
Fluoroacetic acid, sodium salt	10 (4.54)
Formaldehyde	100 (45.4)
Formic acid	5000 (2270)
Fulminic acid, mercury(2+)salt	10 (4.54)
Fumaric acid	5000 (2270)
Furan	100 (45.4)
Furan, tetrahydro-	1000 (454)
2-Furancarboxaldehyde	5000 (2270)
2,5-Furandione	5000 (2270)
Furfural	5000 (2270)
Furfuran	100 (45.4)
Glucopyranose, 2-deoxy-2-(3-methyl-3-nitrosoureido)-	1 (0.454)
D-Glucose, 2-deoxy-2-[[methylnitrosoamino)-carbonyl]amino]-	1 (0.454)
Glycidylaldehyde	10 (4.54)
Guanidine, N-methyl-N'-nitro-N-nitroso-	10 (4.54)
Guthion	1 (0.454)
Heptachlor	1 (0.454)
Heptachlor epoxide	1 (0.454)
Hexachlorobenzene	10 (4.54)
Hexachlorobutadiene	1 (0.454)
Hexachlorocyclohexane (gamma isomer)	1 (0.454)
Hexachlorocyclopentadiene	10 (4.54)
Hexachloroethane	100 (45.4)
1,2,3,4,10-10-Hexachloro-1,4,4a,5,8,8a-hexahydro-1,4:5,8-endo,exo-dimethanonaphthalene	1 (0.454)
Hexachlorophene	100 (45.4)
Hexachloropropene	1000 (454)
Hexaethyl tetraphosphate	100 (45.4)
Hexamethylene-1,6-diisocyanate	100 (45.4)
Hexamethylphosphoramide	1 (0.454)
Hexane	5000 (2270)
Hydrazine	1 (0.454)
Hydrazine, 1,2-diethyl-	10 (4.54)
Hydrazine, 1,1-dimethyl-	10 (4.54)
Hydrazine, 1,2-dimethyl-	1 (0.454)
Hydrazine, 1,2-diphenyl-	10 (4.54)
Hydrazine, methyl-	10 (4.54)
Hydrazinecarbothioamide	100 (45.4)
Hydrochloric acid	5000 (2270)
Hydrocyanic acid	10 (4.54)
Hydrofluoric acid	100 (45.4)
Hydrogen chloride	5000 (2270)
Hydrogen cyanide	10 (4.54)
Hydrogen fluoride	100 (45.4)
Hydrogen phosphide	100 (45.4)
Hydrogen sulfide	100 (45.4)
Hydrogen sulfide H2S	100 (45.4)
Hydroperoxide, 1-methyl-1-phenylethyl-	10 (4.54)
Hydroquinone	100 (45.4)
2-Imidazolidinethione	10 (4.54)
Indeno(1,2,3-cd)pyrene	100 (45.4)
1,3-Isobenzofurandione	5000 (2270)
Isobutyl alcohol	5000 (2270)
Isodrin	1 (0.454)
Isophorone	5000 (2270)
Isoprene	100 (45.4)
Isopropanolamine dodecylbenzene sulfonate	1000 (454)
Isosafrole	100 (45.4)
3(2H)-Isoxazolone, 5-(aminomethyl)-	1000 (454)
Keponedecachloroc-tahydro-	1 (0.454)
Lasiocarpine	10 (4.54)
Lead ¢	10 (4.54)

TABLE 1.—HAZARDOUS SUBSTANCES OTHER THAN RADIONUCLIDES—Continued

Hazardous substance	Reportable quantity (RQ) pounds (kilograms)
Lead acetate	10 (4.54)
Lead arsenate	1 (0.454)
Lead, bis(acetato-O)tetrahydroxytri	10 (4.54)
Lead chloride	10 (4.54)
Lead fluoborate	10 (4.54)
Lead fluoride	10 (4.54)
Lead iodide	10 (4.54)
Lead nitrate	10 (4.54)
Lead phosphate	10 (4.54)
Lead stearate	10 (4.54)
Lead subacetate	10 (4.54)
Lead sulfate	10 (4.54)
Lead sulfide	10 (4.54)
Lead thiocyanate	10 (4.54)
Lindane	1 (0.454)
Lithium chromate	10 (4.54)
Malathion	100 (45.4)
Maleic acid	5000 (2270)
Maleic anhydride	5000 (2270)
Maleic hydrazide	5000 (2270)
Malononitrile	1000 (454)
MDI	5000 (2270)
Melphalan	1 (0.454)
Mercaptodimethur	10 (4.54)
Mercuric cyanide	1 (0.454)
Mercuric nitrate	10 (4.54)
Mercuric sulfate	10 (4.54)
Mercuric thiocyanate	10 (4.54)
Mercurous nitrate	10 (4.54)
Mercury	1 (0.454)
Mercury, (acetato-O)phenyl-	100 (45.4)
Mercury fulminate	10 (4.54)
Methacrylonitrile	1000 (454)
Methanamine, N-methyl-	1000 (454)
Methanamine, N-methyl-N-nitroso	10 (4.54)
Methane, bromo-	1000 (454)
Methane, chloro-	100 (45.4)
Methane, chloromethoxy-	1 (0.454)
Methane, dibromo-	1000 (454)
Methane, dichloro-	1000 (454)
Methane, dichlorodifluoro-	5000 (2270)
Methane, iodo-	100 (45.4)
Methane, isocyanato-	10 (4.54)
Methane, oxybis(chloro-	1 (0.454)
Methane, tetrachloro-	10 (4.54)
Methane, tetranitro-	10 (4.54)
Methane, tribromo-	100 (45.4)
Methane, trichloro-	10 (4.54)
Methane, trichlorofluoro-	5000 (2270)
Methanesulfenyl chloride, trichloro-	100 (45.4)
Methanesulfonic acid, ethyl ester	1 (0.454)
Methanethiol	100 (45.4)
6,9-Methano-2,4,3-benzodioxathiepin, 6,7,8,9,10,10-hexachloro-1,5,5a,6,9,9a-hexahydro-, 3-oxide	1 (0.454)
Methanoic acid	5000 (2270)
4,7-Methano-1H-indene, 1,4,5,6,7,8,8-heptachloro-a,4,7,7a-tetrahydro-	1 (0.454)
4,7-Methano-1H-indene, 1,4,5,6,7,8,8-octachloro-2,3,3a,4,7,7a-hexahydro-	1 (0.454)
Methanol	5000 (2270)
Methapyrilene	5000 (2270)
1,3,4-Metheno-2H-cyclobutal[cd]-pentalen-2-one, 1,1a,3,3a,4,5,5,5a,5b,6-decachloroctahydro-	1 (0.454)
Methomyl	100 (45.4)
Methoxychlor	1 (0.454)
Methyl alcohol	5000 (2270)
Methylamine @	100 (45.4)
Methyl bromide	1000 (454)
1-Methylbutadiene	100 (45.4)
Methyl chloride	100 (45.4)
Methyl chlorocarbonate	1000 (454)
Methyl chloroform	1000 (454)
Methyl chloroformate	1000 (454)
Methylchloromethyl ether @	1 (0.454)

TABLE 1.—HAZARDOUS SUBSTANCES OTHER THAN RADIONUCLIDES—Continued

Hazardous substance	Reportable quantity (RQ) pounds (kilograms)
3-Methylcholanthrene	10 (4.54)
4,4'-Methylenebis(2-chloroaniline)	10 (4.54)
Methylene bromide	1000 (454)
Methylene chloride	1000 (454)
4,4'-Methylenedianiline	10 (4.54)
Methylene diphenyl diisocyanate	5000 (2270)
Methylene oxide	100 (45.4)
Methyl ethyl ketone (MEK)	5000 (2270)
Methyl ethyl ketone peroxide	10 (4.54)
Methyl hydrazine	10 (4.54)
Methyl iodide	100 (45.4)
Methyl isobutyl ketone	5000 (2270)
Methyl isocyanate	10 (4.54)
2-Methyllactonitrile	10 (4.54)
Methyl mercaptan	100 (45.4)
Methyl methacrylate	1000 (454)
Methyl parathion	100 (45.4)
4-Methyl-2-pentanone	5000 (2270)
Methyl tert-butyl ether	1000 (454)
Methylthiouracil	10 (4.54)
Mevinphos	10 (4.54)
Mexacarbate	1000 (454)
Mitomycin C	10 (4.54)
MNNG	10 (4.54)
Monoethylamine	100 (45.4)
Monomethylamine	100 (45.4)
Muscimol	1000 (454)
Naled	10 (4.54)
5,12-Naphthacenedione, 8-acetyl-10-[3-amino-2,3,6-trideoxy-alpha-L-lyxo-hexopyranosyl) oxy]-7,8,9,10-tetrahydro-6,8,11-trihydroxy-1-methoxy-, (8S-cis)-	10 (4.54)
Naphthalenamine, N,N-bis(2-chloroethyl)-	100 (45.4)
Naphthalene	100 (45.4)
Naphthalene, 2-chloro-	5000 (2270)
1,4-Naphthalenedione	5000 (2270)
2,7-Naphthalenedisulfonic acid, 3,3'-[(3,3'- dimethyl-(l,1'-biphenyl)-4,4'-diyl)-bis(azo)]bis(5-amino-4-hydroxy)-tetrasodium salt	10 (4.54)
Naphthenic acid	100 (45.4)
1,4-Naphthoquinone	5000 (2270)
alpha-Naphthylamine	100 (45.4)
beta-Naphthylamine	1 (0.454)
1-Naphthylamine	100 (45.4)
2-Naphthylamine	1 (0.454)
alpha-Naphthylthiourea	100 (45.4)
Nickel ¢	100 (45.4)
Nickel ammonium sulfate	100 (45.4)
Nickel carbonyl	10 (4.54)
Nickel carbonyl Ni(CO)4,(T-4)-	10 (4.54)
Nickel chloride	100 (45.4)
Nickel cyanide	10 (4.54)
Nickel cyanide Ni(CN)2	10 (4.54)
Nickel hydroxide	10 (4.54)
Nickel nitrate	100 (45.4)
Nickel sulfate	100 (45.4)
Nicotine and salts	100 (45.4)
Nitric acid	1000 (454)
Nitric acid, thallium(1+) salt	100 (45.4)
Nitric oxide	10 (4.54)
p-Nitroaniline	5000 (2270)
Nitrobenzene	1000 (454)
4-nitrobiphenyl	10 (4.54)
Nitrogen dioxide	10 (4.54)
Nitrogen oxide NO	10 (4.54)
Nitrogen oxide NO2	10 (4.54)
Nitroglycerine	10 (4.54)
Nitrophenol (mixed)	100 (45.4)
m-	.....
o-	.....
p-	.....
o-Nitrophenol	100 (45.4)
p-Nitrophenol	100 (45.4)

TABLE 1.—HAZARDOUS SUBSTANCES OTHER THAN RADIONUCLIDES—Continued

Hazardous substance	Reportable quantity (RQ) pounds (kilograms)
2-Nitrophenol	100 (45.4)
4-Nitrophenol	100 (45.4)
2-Nitropropane	10 (4.54)
N-Nitrosodi-n-butylamine	10 (4.54)
N-Nitrosodiethanolamine	1 (0.454)
N-Nitrosodiethylamine	1 (0.454)
N-Nitrosodimethylamine	10 (4.54)
N-Nitrosodiphenylamine	100 (45.4)
N-Nitroso-N-ethylurea	1 (0.454)
N-Nitroso-N-methylurea	1 (0.454)
N-Nitroso-N-methylurethane	1 (0.454)
N-Nitrosomethylvinylamine	10 (4.54)
n-Nitrosomorpholine	1 (0.454)
N-Nitrosopiperidine	10 (4.54)
N-Nitrosopyrrolidine	1 (0.454)
Nitrotoluene	1000 (454)
m-Nitrotoluene	.....
o-Nitrotoluene	.....
p-Nitrotoluene	.....
5-Nitro-o-toluidine	100 (45.4)
Octamethylpyrophosphoramide	100 (45.4)
Osmium oxide OsO4 (T-4)-	1000 (454)
Osmium tetroxide	1000 (454)
7-Oxabicyclo[2.2.1]heptane-2,3-dicarboxylic acid	1000 (454)
1,2-Oxathiolane, 2,2-dioxide	10 (4.54)
2H-1,3,2-Oxazaphosphorin-2-amine, N,N-bis(2-chloroethyl)tetrahydro-, 2-oxide	10 (4.54)
Oxirane	10 (4.54)
Oxiranecarboxyaldehyde	10 (4.54)
Oxirane, (chloromethyl)-	100 (45.4)
Paraformaldehyde	1000 (454)
Paraldehyde	1000 (454)
Parathion	10 (4.54)
Pentachlorobenzene	10 (4.54)
Pentachloroethane	10 (4.54)
Pentachloronitrobenzene (PCNB)	100 (45.4)
Pentachlorophenol	10 (4.54)
1,3-Pentadiene	100 (45.4)
Perchloroethylene	100 (45.4)
Perchloromethyl mercaptan @	100 (45.4)
Phenacetin	100 (45.4)
Phenanthrene	5000 (2270)
Phenol	1000 (454)
Phenol, 2-chloro-	100 (45.4)
Phenol, 4-chloro-3-methyl-	5000 (2270)
Phenol, 2-cyclohexyl-4,6-dinitro-	100 (45.4)
Phenol, 2,4-dichloro-	100 (45.4)
Phenol, 2,6-dichloro-	100 (45.4)
Phenol, 4,4'-(1,2-diethyl-1,2-ethenediyl)bis-, (E)	1 (0.454)
Phenol, 2,4-dimethyl-	100 (45.4)
Phenol, 2,4-dinitro-	10 (4.54)
Phenol, methyl-	100 (45.4)
Phenol, 2-methyl-4,6-dinitro-	10 (4.54)
Phenol, 2,2'-methylenebis[3,4,6-trichloro-	100 (45.4)
Phenol, 2-(1-methylpropyl)-4,6-dinitro	1000 (454)
Phenol, 4-nitro-	100 (45.4)
Phenol, pentachloro-	10 (4.54)
Phenol, 2,3,4,6-tetrachloro-	10 (4.54)
Phenol, 2,4,5-trichloro-	10 (4.54)
Phenol, 2,4,6-trichloro-	10 (4.54)
Phenol, 2,4,6-trinitro-, ammonium salt	10 (4.54)
L-Phenylalanine, 4-[bis(2-chloroethyl)aminol]	1 (0.454)
p-Phenylenedimine	5000 (2270)
1,10-(1,2-Phenylene)pyrene	100 (45.4)
Phenyl mercaptan @	100 (45.4)
Phenylmercuric acetate	100 (45.4)
Phenylthiourea	100 (45.4)
Phorate	10 (4.54)
Phosgene	10 (4.54)
Phosphine	100 (45.4)
Phosphoric acid	5000 (2270)

TABLE 1.—HAZARDOUS SUBSTANCES OTHER THAN RADIONUCLIDES—Continued

Hazardous substance	Reportable quantity (RQ) pounds (kilograms)
Phosphoric acid, diethyl 4-nitrophenyl ester	100 (45.4)
Phosphoric acid, lead(2+) salt (2:3)	10 (4.54)
Phosphorodithioic acid, O,O-diethyl S-[2-(ethylthio)ethyl]ester	1 (0.454)
Phosphorodithioic acid, O,O-diethyl S-(ethylthio), methyl ester	10 (4.54)
Phosphorodithioic acid, O,O-diethyl S-methyl ester	5000 (2270)
Phosphorodithioic acid, O,O-dimethyl S-[2 (methylamino)-2-oxoethyl] ester	10 (4.54)
Phosphorofluoridic acid, bis(1-methylethyl) ester	100 (45.4)
Phosphorothioic acid, O,O-diethyl O-(4-nitrophenyl) ester	10 (4.54)
Phosphorothioic acid, O,O-diethyl O-pyrazinyl ester	100 (45.4)
Phosphorothioic acid, O,O-dimethyl O-(4-nitrophenyl) ester	100 (45.4)
Phosphorothioic acid, O,[4-[(dimethylamino)sulfonyl] phenyl] O,O-dimethyl ester	1000 (454)
Phosphorus	1 (0.454)
Phosphorus oxychloride	1000 (454)
Phosphorus pentasulfide	100 (45.4)
Phosphorus sulfide	100 (45.4)
Phosphorus trichloride	1000 (454)
Phthalic anhydride	5000 (2270)
2-Picoline	5000 (2270)
Piperidine, 1-nitroso-	10 (4.54)
Plumbane, tetraethyl-	10 (4.54)
POLYCHLORINATED BIPHENYLS (PCBs)	1 (0.454)
Potassium arsenate	1 (0.454)
Potassium arsenite	1 (0.454)
Potassium bichromate	10 (4.54)
Potassium chromate	10 (4.54)
Potassium cyanide	10 (4.54)
Potassium cyanide K(CN)	10 (4.54)
Potassium hydroxide	1000 (454)
Potassium permanganate	100 (45.4)
Potassium silver cyanide	1 (0.454)
Pronamide	5000 (2270)
Propanal, 2-methyl-2-(methylthio)-,O-[(methylamino)carbonyl]oxime	1 (0.454)
1-Propanamine	5000 (2270)
1-Propanamine, N-nitroso-N-propyl-	10 (4.54)
1-Propanamine, N-propyl-	5000 (2270)
Propane, 1,2-dibromo-3-chloro-	1 (0.454)
Propane, 1,2-dichloro-	1000 (454)
Propane, 2-nitro-	10 (4.54)
Propane, 2,2'-oxybis [2-chloro-	1000 (454)
1,3-Propane sultone	10 (4.54)
Propanedinitrile	1000 (454)
Propanenitrile	10 (4.54)
Propanenitrile, 3-chloro-	1000 (454)
Propanenitrile, 2-hydroxy-2-methyl-	10 (4.54)
1,2,3-Propanetriol, trinitrate-	10 (4.54)
1-Propanol, 2,3-dibromo-, phosphate (3:1)	10 (4.54)
1-Propanol, 2-methyl-	5000 (2270)
2-Propanone	5000 (2270)
2-Propanone, 1-bromo-	1000 (454)
Propargite	10 (4.54)
Propargyl alcohol	1000 (454)
2-Propenal	1 (0.454)
2-Propenamide	5000 (2270)
1-Propene, 1,3-dichloro-	100 (45.4)
1-Propene, 1,1,2,3,3,3-hexachloro-	1000 (454)
2-Propenenitrile	100 (45.4)
2-Propenenitrile, 2-methyl-	1000 (454)
2-Propenoic acid	5000 (2270)
2-Propenoic acid, ethyl ester	1000 (454)
2-Propenoic acid, 2-methyl-, ethyl ester	1000 (454)
2-Propenoic acid, 2-methyl-, methyl ester	1000 (454)
2-Propen-1-ol	100 (45.4)
beta-Propioaldehyde	1000 (454)
Propionic acid	5000 (2270)
Propionic acid, 2-(2,4,5-trichlorophenoxy)-	100 (45.4)
Propionic anhydride	5000 (2270)
Propoxur (baygon)	100 (45.4)
n-Propylamine	5000 (2270)
Propylene dichloride	1000 (454)
Propylene oxide	100 (45.4)

TABLE 1.—HAZARDOUS SUBSTANCES OTHER THAN RADIONUCLIDES—Continued

Hazardous substance	Reportable quantity (RQ) pounds (kilograms)
1,2-Propylenimine	1 (0.454)
2-Propyn-1-ol	1000 (454)
Pyrene	5000 (2270)
Pyrethrins	1 (0.454)
3,6-Pyridazinedione, 1,2-dihydro-	5000 (2270)
4-Pyridinamine	1000 (454)
Pyridine	1000 (454)
Pyridine, 2-methyl-	5000 (2270)
Pyridine, 3-(1-methyl-2-pyrrolidinyl)-, (S)	100 (45.4)
2,4-(1H,3H)-Pyrimidinedione, 5-[bis(2-chloroethyl)amino]-	10 (4.54)
4(1H)-Pyrimidinone, 2,3-dihydro-6-methyl-2-thioxo-	10 (4.54)
Pyrrolidine, 1-nitroso-	1 (0.454)
Quinoline	5000 (2270)
RADIONUCLIDES	See Table 2
Reserpine	5000 (2270)
Resorcinol	5000 (2270)
Saccharin and salts	100 (45.4)
Safrole	100 (45.4)
Selenious acid	10 (4.54)
Selenious acid, dithallium(1+) salt	1000 (454)
Selenium ¢	100 (45.4)
Selenium dioxide	10 (4.54)
Selenium oxide	10 (4.54)
Selenium sulfide	10 (4.54)
Selenium sulfide SeS2	10 (4.54)
Selenourea	1000 (454)
L-Serine, diazoacetate (ester)	1 (0.454)
Silver ¢	1000 (454)
Silver cyanide	1 (0.454)
Silver cyanide Ag(CN)	1 (0.454)
Silver nitrate	1 (0.454)
Silvex(2,4,5-TP)	100 (45.4)
Sodium	10 (4.54)
Sodium arsenate	1 (0.454)
Sodium arsenite	1 (0.454)
Sodium azide	1000 (454)
Sodium bichromate	10 (4.54)
Sodium bifluoride	100 (45.4)
Sodium bisulfite	5000 (2270)
Sodium chromate	10 (4.54)
Sodium cyanide	10 (4.54)
Sodium cyanide Na(CN)	10 (4.54)
Sodium dodecylbenzene sulfonate	1000 (454)
Sodium fluoride	1000 (454)
Sodium hydrosulfide	5000 (2270)
Sodium hydroxide	1000 (454)
Sodium hypochlorite	100 (45.4)
Sodium methylate	1000 (454)
Sodium nitrite	100 (45.4)
Sodium phosphate, dibasic	5000 (2270)
Sodium phosphate, tribasic	5000 (2270)
Sodium selenite	100 (45.4)
Streptozotocin	1 (0.454)
Strontium chromate	10 (4.54)
Strychnidin-10-one	10 (4.54)
Strychnidin-10-one, 2,3-dimethoxy-	100 (45.4)
Strychnine and salts	10 (4.54)
Styrene	1000 (454)
Styrene oxide	100 (45.4)
Sulfur chloride @	1000 (454)
Sulfur monochloride	1000 (454)
Sulfur phosphide	100 (45.4)
Sulfuric acid	1000 (454)
Sulfuric acid, dimethyl ester	100 (45.4)
Sulfuric acid, dithallium(I+) salt	100 (45.4)
2,4,5-T	1000 (454)
2,4,5-T acid	1000 (454)
2,4,5-T amines	5000 (2270)
2,4,5-T esters	1000 (454)
2,4,5-T salts	1000 (454)

TABLE 1.—HAZARDOUS SUBSTANCES OTHER THAN RADIONUCLIDES—Continued

Hazardous substance	Reportable quantity (RQ) pounds (kilograms)
TDE	1 (0.454)
1,2,4,5-Tetrachlorobenzene	5000 (2270)
2,3,7,8-Tetrachlorodibenzo-p-dioxin (TCDD)	1 (0.454)
1,1,1,2-Tetrachloroethane	100 (45.4)
1,1,2,2-Tetrachloroethane	100 (45.4)
Tetrachloroethane @	100 (45.4)
Tetrachloroethene	100 (45.4)
Tetrachloroethylene	100 (45.4)
2,3,4,6-Tetrachlorophenol	10 (4.54)
Tetraethyl lead	10 (4.54)
Tetraethyl pyrophosphate	10 (4.54)
Tetraethyldithiopyrophosphate	100 (45.4)
Tetrahydrofuran	1000 (454)
Tetranitromethane	10 (4.54)
Tetraphosphoric acid, hexaethyl ester	100 (45.4)
Thallic oxide	100 (45.4)
Thallium ¢	1000 (454)
Thallium(I) acetate	100 (45.4)
Thallium(I) carbonate	100 (45.4)
Thallium(I) chloride	100 (45.4)
Thallium chloride TlCl	100 (45.4)
Thallium(I) nitrate	100 (45.4)
Thallium oxide T1203	100 (45.4)
Thallium selenite	1000 (454)
Thallium(I) sulfate	100 (45.4)
Thioacetamide	10 (4.54)
Thiodiphosphoric acid, tetraethyl ester	100 (45.4)
Thiofanox	100 (45.4)
Thioimidodicarbonic diamide [(H2N)C(S)]2NH	100 (45.4)
Thiomethanol	100 (45.4)
Thioperoxydicarbonic diamide [(H2N)C(S)]2S2, tetramethyl-	10 (4.54)
Thiophenol	100 (45.4)
Thiosemicarbazide	100 (45.4)
Thiourea	10 (4.54)
Thiourea, (2-chlorophenyl)-	100 (45.4)
Thiourea, 1-naphthalenyl-	100 (45.4)
Thiourea, phenyl-	100 (45.4)
Thiram	10 (4.54)
Titanium tetrachloride	1000 (454)
Toluene	1000 (454)
Toluenediamine	10 (4.54)
Toluene diisocyanate	100 (45.4)
o-Toluidine	100 (45.4)
p-Toluidine	100 (45.4)
o-Toluidine hydrochloride	100 (45.4)
Toxaphene	1 (0.454)
2,4,5-TP acid	100 (45.4)
2,4,5-TP acid esters	100 (45.4)
1H-1,2,4-Triazol-3-amine	10 (4.54)
Trichlorfon	100 (45.4)
1,2,4-Trichlorobenzene	100 (45.4)
1,1,1-Trichloroethane	1000 (454)
1,1,2-Trichloroethane	100 (45.4)
Trichloroethene	100 (45.4)
Trichloroethylene	100 (45.4)
Trichloromethanesulfenyl chloride	100 (45.4)
Trichloromonofluoromethane	5000 (2270)
Trichlorophenol	10 (4.54)
2,3,4-Trichlorophenol	.....
2,3,5-Trichlorophenol.	
2,3,6-Trichlorophenol	.....
2,4,5-Trichlorophenol	.....
2,4,6-Trichlorophenol	.....
3,4,5-Trichlorophenol	.....
2,4,5-Trichlorophenol	10 (4.54)
2,4,6-Trichlorophenol	10 (4.54)
Triethanolamine dodecylbenzene sulfonate	1000 (454)
Triethylamine	5000 (2270)
Trifluralin	10 (4.54)
Trimethylamine	100 (45.4)

TABLE 1.—HAZARDOUS SUBSTANCES OTHER THAN RADIONUCLIDES—Continued

Hazardous substance	Reportable quantity (RQ) pounds (kilograms)
2,2,4–Trimethylpentane	1000 (454)
1,3,5-Trinitrobenzene	10 (4.54)
1,3,5-Trioxane, 2,4,6-trimethyl-	1000 (454)
Tris(2,3-dibromopropyl) phosphate	10 (4.54)
Trypan blue	10 (4.54)
Uracil mustard	10 (4.54)
Uranyl acetate	100 (45.4)
Uranyl nitrate	100 (45.4)
Urea, N-ethyl-N-nitroso-	1 (0.454)
Urea, N-methyl-N-nitroso-	1 (0.454)
Vanadic acid, ammonium salt	1000 (454)
Vanadium oxide V205	1000 (454)
Vanadium pentoxide	1000 (454)
Vanadyl sulfate	1000 (454)
Vinyl acetate	5000 (2270)
Vinyl acetate monomer	5000 (2270)
Vinylamine, N-methyl-N-nitroso-	10 (4.54)
Vinyl bromide	100 (45.4)
Vinyl chloride	1 (0.454)
Vinylidene chloride	100 (45.4)
Warfarin, & salts, when present at concentrations greater than 0.3%	100 (45.4)
Xylene	100 (45.4)
m-Xylene	1000 (454)
o-Xylene	1000 (454)
p-Xylene	100 (45.4)
Xylene (mixed)	100 (45.4)
Xylenes (isomers and mixture)	100 (45.4)
Xylenol	1000 (454)
Yohimban-16-carboxylic acid,11,17-dimethoxy-18-[(3,4,5-trimethoxybenzoyl)oxy]-, methyl ester (3beta,16beta,17alpha,18beta,20alpha)-	5000 (2270)
Zinc ¢	1000 (454)
Zinc acetate	1000 (454)
Zinc ammonium chloride	1000 (454)
Zinc borate	1000 (454)
Zinc bromide	1000 (454)
Zinc carbonate	1000 (454)
Zinc chloride	1000 (454)
Zinc cyanide	10 (4.54)
Zinc cyanide Zn(CN)2	10 (4.54)
Zinc fluoride	1000 (454)
Zinc formate	1000 (454)
Zinc hydrosulfite	1000 (454)
Zinc nitrate	1000 (454)
Zinc phenolsulfonate	5000 (2270)
Zinc phosphide	100 (45.4)
Zinc phosphide Zn3P2, when present at concentrations greater than 10%	100 (45.4)
Zinc silicofluoride	5000 (2270)
Zinc sulfate	1000 (454)
Zirconium nitrate	5000 (2270)
Zirconium potassium fluoride	1000 (454)
Zirconium sulfate	5000 (2270)
Zirconium tetrachloride	5000 (2270)
D001 Unlisted Hazardous Wastes Characteristic of Ignitability	100 (45.4)
D002 Unlisted Hazardous Wastes Characteristic of Corrosivity	100 (45.4)
D003 Unlisted Hazardous Wastes Characteristic of Reactivity	100 (45.4)
D004-D043 Unlisted Hazardous Wastes Characteristic of Toxicity	.....
D004 Arsenic	1 (0.454)
D005 Barium	1000 (454)
D006 Cadmium	10 (4.54)
D007 Chromium	10 (4.54)
D008 Lead	10 (4.54)
D009 Mercury	1 (0.454)
D010 Selenium	10 (4.54)
D011 Silver	1 (0.454)
D012 Endrin	1 (0.454)
D013 Lindane	1 (0.454)
D014 Methoxychlor	1 (0.454)
D015 Toxaphene	1 (0.454)
D016 2,4-D	100 (45.4)
D017 2,4,5-TP	100 (45.4)

TABLE 1.—HAZARDOUS SUBSTANCES OTHER THAN RADIONUCLIDES—Continued

Hazardous substance	Reportable quantity (RQ) pounds (kilograms)
D018 Benzene	10 (4.54)
D019 Carbon tetrachloride	10 (4.54)
D020 Chlordane	1 (0.454)
D021 Chlorobenzene	100 (45.4)
D022 Chloroform	10 (4.54)
D023 o-Cresol	100 (45.4)
D024 m-Cresol	100 (45.4)
D025 p-Cresol	100 (45.4)
D026 Cresol	100 (45.4)
D027 1,4-Dichlorobenzene	100 (45.4)
D028 1,2-Dichloroethane	100 (45.4)
D029 1,1-Dichloroethylene	100 (45.4)
D030 2,4-Dinitrotoluene	10 (4.54)
D031 Heptachlor (and hydroxide)	1 (0.454)
D032 Hexachlorobenzene	10 (4.54)
D033 Hexachlorobutadiene	1 (0.454)
D034 Hexachloroethane	100 (45.4)
D035 Methyl ethyl ketone	5000 (2270)
D036 Nitrobenzene	1000 (454)
D037 Pentachlorophenol	10 (4.54)
D038 Pyridine	1000 (454)
D039 Tetrachloroethylene	100 (45.4)
D040 Tricholorethylene	100 (45.4)
D041 2,4,5–Trichlorophenol	10 (4.54)
D042 2,4,6–Trichlorophenol	10 (4.54)
D043 Vinyl chloride	1 (0.454)
F001	
The following spent halogenated solvents used in degreasing; all spent solvent mixtures/blends used in degreasing containing, before use, a total of ten percent or more (by volume) of one or more of the below listed halogenated solvents or those solvents listed in F002, F004 and F005; and still bottoms from the recovery of these spent solvents and spent solvent mixtures	10 (4.54)
(a) Tetrachloroethylene	100 (45.4)
(b) Trichloroethylene	100 (45.4)
(c) Methylene chloride	1000 (454)
(d) 1,1,1–Trichloroethane	1000 (454)
(e) Carbon tetrachloride	10 (4.54)
(f) Chlorinated fluorocarbons	5000 (2270)
F002	
The following spent halogenated solvents; all spent solvent mixtures/blends containing, before use, a total of ten percent or more (by volume) of one or more of the below listed halogenated solvents or those listed in F001, F004, F005; and still bottoms from the recovery of these spent solvents and spent solvent mixtures.	10 (4.54)
(a) Tetrachloroethylene	100 (45.4)
(b) Methylene chloride	1000 (454)
(c) Trichloroethylene	100 (45.4)
(d) 1,1,1–Trichloroethane	1000 (454)
(e) Chlorobenzene	100 (45.4)
(f) 1,1,2–Trichloro-1,2,2-trifluoroethane	5000 (2270)
(g) o-Dichlorobenzene	100 (45.4)
(h) Trichlorofluoromethane	5000 (2270)
(i) 1,1,2 Trichloroethane	100 (45.4)
F003	
The following spent non-halogenated solvents and solvents:	100 (45.4)
(a) Xylene	1000 (454)
(b) Acetone	5000 (2270)
(c) Ethyl acetate	5000 (2270)
(d) Ethylbenzene	1000 (454)
(e) Ethyl ether	100 (45.4)
(f) Methyl isobutyl ketone	5000 (2270)
(g) n-Butyl alcohol	5000 (2270)
(h) Cyclohexanone	5000 (2270)
(i) Methanol	5000 (2270)
F004	100 (45.4)
The following spent non-halogenated solvents and the stillbottoms from the recovery of these solvents:	
(a) Cresols/Cresylic acid	1000 (454)
(b) Nitrobenzene	100 (45.4)
F005	
The following spent non-halogenated solvents and the stillbottoms from the recovery of these solvents:	100 (45.4)
(a) Toluene	1000 (454)
(b) Methyl ethyl ketone	5000 (2270)
(c) Carbon disulfide	100 (45.4)

TABLE 1.—HAZARDOUS SUBSTANCES OTHER THAN RADIONUCLIDES—Continued

Hazardous substance	Reportable quantity (RQ) pounds (kilograms)
(d) Isobutanol	5000 (2270)
(e) Pyridine	1000 (454)
F006	
Wastewater treatment sludges from electroplating operations except from the following processes: (1) sulfuric acid anodizing of aluminum, (2) tin plating on carbon steel, (3) zinc plating (segregated basis) on carbonsteel, (4) aluminum or zinc-aluminum plating on carbon steel, (5) cleaning/stripping associated with tin, zinc and aluminum plating on carbon steel, and (6) chemical etching and milling of aluminum	10 (4.54)
F007	
Spent cyanide plating bath solutions from electroplating operations	10 (4.54)
F008	
Plating bath residues from the bottom of plating baths from electroplating operations where cyanides are used in the process	10 (4.54)
F009	
Spent stripping and cleaning bath solutions from electroplating operations where cyanides are used in the process	10 (4.54)
F010	
Quenching bath residues from oil baths from metal heat treating operations where cyanides are used in the process	10 (4.54)
F011	
Spent cyanide solutions from salt bath pot cleaning from metal heat treating operations (except for precious metals heat treating spent cyanide solutions from salt bath pot cleaning)	10 (4.54)
F012	
Quenching wastewater treatment sludges from metal heat treating operations where cyanides are used in the process	10 (4.54)
F019	
Wastewater treatment sludges from the chemical conversion coating of aluminum—except from zirconium phosphating in aluminum can washing when such phosphating is an exclusive conversion coating process	10 (4.54)
F020	
Wastes (except wastewater and spent carbon from hydrogen chloride purification) from the production or manufacturing use (as a reactant, chemical intermediate, or component in a formulating process) of tri- or tetrachlorophenol, or of intermediates used to produce their pesticide derivatives. (This listing does not include wastes from the production of hexachlorophene from highly purified 2,4,5-trichlorophenol.)	1 (0.454)
F021	
Wastes (except wastewater and spent carbon from hydrogen chloride purification) from the production or manufacturing use (as a reactant, chemical intermediate, or component in a formulating process) of pentachlorophenol, or of intermediates used to produce its derivatives.	1 (0.454)
F022	
Wastes (except wastewater and spent carbon from hydrogen chloride purification) from the manufacturing use (as a reactant, chemical intermediate, or component in a formulating process) of tetra-, penta-, or hexachlorobenzenes under alkaline conditions.	1 (0.454)
F023	
Wastes (except wastewater and spent carbon from hydrogen chloride purification) from the production of materials on equipment previously used for the production or manufacturing use (as a reactant, chemical intermediate, or component in a formulating process) of tri- and tetrachlorophenols. (This listing does not include wastes from equipment used only for the production or use of hexachlorophene from highly purified 2,4,5-trichlorophenol.)	1 (0.454)
F024	
Wastes, including but not limited to distillation residues, heavy ends, tars, and reactor cleanout wastes, from the production of chlorinated aliphatichydrocarbons, having carbon content from one to five, utilizing free radical catalyzed processes. (This listing does not include light ends, spent filters and filter aids, spent dessicants(sic), wastewater, wastewater treatment sludges,spent catalysts, and wastes listed in 40 CFR 261.32.)	1 (0.454)
F025	
Condensed light ends, spent filters and filter aids, and spent desiccant wastes from the production of certain chlorinated aliphatic hydrocarbons, by free radical catalyzed processes. These chlorinated aliphatic hydrocarbons are those having carbon chain lengths ranging from one to and including five, with varying amounts and positions of chlorine substitution	1 (0.454)
F026	
Wastes (except wastewater and spent carbon from hydrogen chloride purification) from the production of materials on equipment previously used for the manufacturing use (as a reactant, chemical intermediate, or component in a formulating process) of tetra-, penta-, or hexachlorobenzene under alkaline conditions.	1 (0.454)
F027	
Discarded unused formulations containing tri-, tetra-, or pentachlorophenol or discarded unused formulations containing compounds derived from these chlorophenols. (This listing does not include formulations containing hexachlorophene synthesized from prepurified 2,4,5-trichlorophenol as the sole component.)	1 (0.454)
F028	
Residues resulting from the incineration or thermal treatment of soil contaminated with EPA Hazardous Waste Nos. F020, F021, F022, F023, F026, and F027.	1 (0.454)
F032	1 (0.454)

TABLE 1.—HAZARDOUS SUBSTANCES OTHER THAN RADIONUCLIDES—Continued

Hazardous substance	Reportable quantity (RQ) pounds (kilo-grams)
F034	1 (0.454)
F035	1 (0.454)
F037	1 (0.454)
F038.	
F039	
Multi source leachate	1 (0.454)
K001	
Bottom sediment sludge from the treatment of wastewaters from wood preserving processes that use creosote and/or pentachlorophenol.	
K002	
Wastewater treatment sludge from the production of chrome yellow and orange pigments	10 (4.54)
K003	
Wastewater treatment sludge from the production of molybdate orange pigments.	
K004	
Wastewater treatment sludge from the production of zinc yellow pigments	10 (4.54)
K005	
Wastewater treatment sludge from the production of chrome green pigments.	
K006	
Wastewater treatment sludge from the production of chrome oxide green pigments (anhydrous and hydrated)	10 (4.54)
K007	
Wastewater treatment sludge from the production of iron blue pigments.	
K008	
Oven residue from the production of chrome oxide green pigments	10 (4.54)
K009	
Distillation bottoms from the production of acetaldehyde from ethylene	10 (4.54)
K010	
Distillation side cuts from the production of acetaldehyde from ethylene	10 (4.54)
K011	
Bottom stream from the wastewater stripper in the production of acrylonitrile	10 (4.54)
K013	
Bottom stream from the acetonitrile column in the production of acrylonitrile	10 (4.54)
K014	
Bottoms from the acetonitrile purification column in the production of acrylonitrile	5000 (2270)
K015	
Still bottoms from the distillation of benzyl chloride	10 (4.54)
K016	
Heavy ends or distillation residues from the production of carbon tetrachloride	1 (0.454)
K017	
Heavy ends (still bottoms) from the purification column in the production of epichlorohydrin	10 (4.54)
K018	
Heavy ends from the fractionation column in ethyl chloride production	1 (0.454)
K019	
Heavy ends from the distillation of ethylene dichloride in ethylene dichloride production.	1 (0.454)
K020	
Heavy ends from the distillation of vinyl chloride in vinyl chloride monomer production	1 (0.454)
K021	
Aqueous spent antimony catalyst waste from fluoromethanes production	10 (4.54)
K022	
Distillation bottom tars from the production of phenol/acetone from cumene	1 (0.454)
K023	
Distillation light ends from the production of phthalic anhydride from naphthalene	5000 (2270)
K024	
Distillation bottoms from the production of phthalic anhydride from naphthalene	5000 (2270)
K025	
Distillation bottoms from the production of nitrobenzene by the nitration of benzene	10 (4.54)
K026	
Stripping still tails from the production of methyl ethyl pyridines	1000 (454)
K027	
Centrifuge and distillation residues from toluene diisocyanate production	10 (4.54)
K028	
Spent catalyst from the hydrochlorinator reactor in the production of 1,1,1-trichloroethane	1 (0.454)
K029	
Waste from the product steam stripper in the production of 1,1,1-trichloroethane	1 (0.454)
K030	
Column bottoms or heavy ends from the combined production of trichloroethylene and perchloroethylene	1 (0.454)
K031	
By-product salts generated in the production of MSMA and cacodylic acid	1 (0.454)
K032	
Wastewater treatment sludge from the production of chlordane	10 (4.54)

TABLE 1.—HAZARDOUS SUBSTANCES OTHER THAN RADIONUCLIDES—Continued

Hazardous substance	Reportable quantity (RQ) pounds (kilograms)
K033	
Wastewater and scrub water from the chlorination of cyclopentadiene in the production of chlordane	10 (4.54)
K034	
Filter solids from the filtration of hexachlorocyclopentadiene in the production of chlordane	10 (4.54)
K035	
Wastewater treatment sludges generated in the production of creosote	1 (0.454)
K036	
Still bottoms from toluene reclamation distillation in the production ofdisulfoton	1 (0.454)
K037	
Wastewater treatment sludges from the production of disulfoton	1 (0.454)
K038	
Wastewater from the washing and stripping of phorate production	10 (4.54)
K039	
Filter cake from the filtration of diethylphosphorodithioic acid in the production of phorate	10 (4.54)
K040	
Wastewater treatment sludge from the production of phorate	10 (4.54)
K041	
Wastewater treatment sludge from the production of toxaphene	1 (0.454)
K042	
Heavy ends or distillation residues from the distillation of tetrachlorobenzene in the production of 2,4,5–T	10 (4.54)
K043	
2,6-dichlorophenol waste from the production of 2,4–D	10 (4.54)
K044	
Wastewater treatment sludges from the manufacturing and processing of explosives	10 (4.54)
K045	
Spent carbon from the treatment of wastewater containing explosives	10 (4.54)
K046	
Wastewater treatment sludges from the manufacturing, formulation and loading of lead-based initiating compounds	10 (4.54)
K047	
Pink/red water from TNT operations	10 (4.54)
K048	
Dissolved air flotation (DAF) float from the petroleum refining industry	10 (4.54)
K049	
Slop oil emulsion solids from the petroleum refining industry	10 (4.54)
K050	
Heat exchanger bundle cleaning sludge from the petroleum refining industry	10 (4.54)
K051	
API separator sludge from the petroleum refining industry	10 (4.54)
K052	
Tank bottoms (leaded) from the petroleum refining industry	10 (4.54)
K060	
Ammonia still lime sludge from coking operations	1 (0.454)
K061	
Emission control dust/sludge from the primary production of steel in electric furnaces	10 (4.54)
K062	
Spent pickle liquor generated by steel finishing operations of facilities within the iron and steel industry	10 (4.54)
K064	
Acid plant blowdown slurry/sludge resulting from thickening of blowdoen slurry from primary copper production.	10 (4.54)
K065	
Surface impoundment solids contained in and dredged from surface impoundments at primary lead smelting facilities.	10 (4.54)
K066	
Sludge from treatment of process wastewater and /or acid plant blowdown from primary zinc production.	10 (4.54)
K069	
Emission control dust/sludge from secondary lead smelting	10 (4.54)
K071	
Brine purification muds from the mercury cell process in chlorine production, where separately prepurified brine is not used	1 (0.454)
K073	
Chlorinated hydrocarbon waste from the purification step of the diaphragm cell process using graphite anodes in chlorine production.	10 (4.54)
K083	
Distillation bottoms from aniline extraction	100 (45.4)
K084	
Wastewater treatment sludges generated during the production of veterinary pharmaceuticals from arsenic or organo-arsenic compounds	1 (0.454)
K085	
Distillation or fractionation column bottoms from the production of chlorobenzenes	10 (4.54)

TABLE 1.—HAZARDOUS SUBSTANCES OTHER THAN RADIONUCLIDES—Continued

Hazardous substance	Reportable quantity (RQ) pounds (kilograms)
K086	
Solvent washes and sludges, caustic washes and sludges, or water washes and sludges from cleaning tubs and equipment used in the formulation of ink from pigments, driers, soaps, and stabilizers containing chromium and lead	10 (4.54)
K087	
Decanter tank tar sludge from coking operations	100 (45.4)
K088	10 (4.54)
Spent potliners from primary aluminum reduction.	
K090	10 (4.54)
Emission control dust or sludge from ferrochromiumsilicon production	
K091	10 (4.54)
Emission control dust or sludge from ferrochromium production	
K093	
Distillation light ends from the production of phthalic anhydride from ortho-xylene	5000 (2270)
K094	
Distillation bottoms from the production of phthalic anhydride from ortho-xylene	5000 (2270)
K095	
Distillation bottoms from the production of 1,1,1-trichloroethane.	100 (45.4)
K096	
Heavy ends from the heavy ends column from the production of 1,1,1-trichloroethane.	100 (45.4)
K097	
Vacuum stripper discharge from the chlordane chlorinator in the production of chlordane	1 (0.454)
K098	
Untreated process wastewater from the production of toxaphene	1 (0.454)
K099	
Untreated wastewater from the production of 2,4-D	10 (4.54)
K100	
Waste leaching solution from acid leaching of emission control dust/sludge from secondary lead smelting	10 (4.54)
K101	
Distillation tar residues from the distillation of aniline-based compounds in the production of veterinary pharmaceuticals from arsenic or organo-arsenic compounds	1 (0.454)
K102	
Residue from the use of activated carbon for decolorization in the production of veterinary pharmaceuticals from arsenic or organo-arsenic compounds	1 (0.454)
K103	
Process residues from aniline extraction from the production of aniline	100 (45.4)
K104	
Combined wastewater streams generated from nitrobenzene/aniline chlorobenzenes	10 (4.54)
K105	
Separated aqueous stream from the reactor product washing step in the production of chlorobenzenes	10 (4.54)
K106	
Wastewater treatment sludge from the mercury cell process in chlorine production	1 (0.454)
K107	
Column bottoms from product seperation from the production of 1,1-dimethylhydrazine (UDMH) from carboxylic acid hydrazines	10 (4.54)
K108	
Condensed column overheads from product seperation and condensed reator vent gases from the production of 1,1-dimethylhydrazine (UDMH) from carboxylic acid hydrazides	10 (4.54)
K109	
Spent filter cartidges from product purification from the production of 1,1-dimethylhydrazine (UDMH) from carboxylic acid hydazides	10 (4.54)
K110	
Condensed column overheads from intermediate seperation from the production of 1,1-dimethylhydrazines (UDMH) from carboxylic acid hydrazides	10 (4.54)
K111	
Product washwaters from the production of dinitrotoluene via nitration of toluene.	10 (4.54)
K112	
Reaction by-product water from the drying column in the production of toluenediamine via hydrogenation of dinitrotoluene.	10 (4.54)
K113	
Condensed liquid light ends from the purification of toluenediamine in the production of toluenediamine via hydrogenation of dinitrotoluene.	10 (4.54)
K114	
Vicinals from the purification of toluenediamine in the production of toluenediamine via hydrogenation of dinitrotoluene.	10 (4.54)
K115	
Heavy ends from the purification of toluenediamine in the production of toluenediamine via hydrogenation of dinitrotoluene.	10 (4.54)

TABLE 1.—HAZARDOUS SUBSTANCES OTHER THAN RADIONUCLIDES—Continued

Hazardous substance	Reportable quantity (RQ) pounds (kilograms)
K116	
Organic condensate from the solvent recovery column in the production of toluene diisocyanate via phosgenation of toluenediamine.	10 (4.54)
K117	
Wastewater from the reaction vent gas scrubber in the production of ethylene bromide via bromination of ethene.	1 (0.454)
K118	
Spent absorbent solids from purification of ethylene dibromide in the production of ethylene dibromide.	1 (0.454)
K123	
Process wastewater (including supernates, filtrates, and washwaters) from the production of ethylenebisdithiocarbamic acid and its salts.	10 (4.54)
K124	
Reactor vent scrubber water from the production of ethylenebisdithiocarbamic acid and its salts.	10 (4.54)
K125	
Filtration, evaporation, and centrifugation solids from the production of ethylenebisdithiocarbamic acid and its salts.	10 (4.54)
K126	
Baghouse dust and floor sweepings in milling and packaging operations from the production or formulation of ethylenebisdithiocarbamic acid and its salts.	10 (4.54)
K131	
Waste water from the reactor and spent sulfuric acid from the acid dryer in the production of methyl bromide	100 (45.4)
K132	
Spent absorbent and wastewater solids from the production of methyl bromide	1000 (454)
K136	
Still bottoms from the purification of ethylene dibromide in the production of ethylene dibromide via bromination of ethene.	1 (0.454)
K141	1 (0.454)
K142	1 (0.454)
K143	1 (0.454)
K144	1 (0.454)
K145	1 (0.454)
K147	1 (0.454)
K148	1 (0.454)
K149	10 (4.54)
K150	10 (4.54)
K151	10 (4.54)

Footnotes:

¢ The RQ for these hazardous substances is limited to those pieces of the metal having a diameter smaller than 100 micrometers (0.004 inches)

¢¢ The RQ for asbestos is limited to friable forms only

@ Indicates that the name was added by RSPA because (1) the name is a synonym for a specific hazardous substance and (2) the name appears in the Hazardous Materials Table as a proper shipping name.

LIST OF HAZARDOUS SUBSTANCES AND REPORTABLE QUANTITIES

TABLE 2.—Radionuclides

(1)—Radionuclide	(2)—Atomic Number	(3)—Reportable Quantity (RQ) Ci (TBq)
Actinium-224	89	100 (3.7)
Actinium-225	89	1 (.037)
Actinium-226	89	10 (.37)
Actinium-227	89	0.001 (.000037)
Actinium-228	89	10 (.37)
Aluminum-26	13	10 (.37)
Americium-237	95	1000 (37)
Americium-238	95	100 (3.7)
Americium-239	95	100 (3.7)
Americium-240	95	10 (.37)
Americium-241	95	0.01 (.00037)
Americium-242	95	100 (3.7)
Americium-242m	95	0.01 (.00037)
Americium-243	95	0.01 (.00037)
Americium-244	95	10 (.37)
Americium-244m	95	1000 (37)
Americium-245	95	1000 (37)
Americium-246	95	1000 (37)
Americium-246m	95	1000 (37)
Antimony-115	51	1000 (37)
Antimony-116	51	1000 (37)
Antimony-116m	51	100 (3.7)
Antimony-117	51	1000 (37)
Antimony-118m	51	10 (.37)
Antimony-119	51	1000 (37)
Antimony-120 (16 min)	51	1000 (37)
Antimony-120 (5.76 day)	51	10 (.37)
Antimony-122	51	10 (.37)
Antimony-124	51	10 (.37)
Antimony-124m	51	1000 (37)
Antimony-125	51	10 (.37)
Antimony-126	51	10 (.37)
Antimony-126m	51	1000 (37)
Antimony-127	51	10 (.37)
Antimony-128 (10.4 min)	51	1000 (37)
Antimony-128 (9.01 hr)	51	10 (.37)
Antimony-129	51	100 (3.7)
Antimony-130	51	100 (3.7)
Antimony-131	51	1000 (37)
Argon-39	18	1000 (37)
Argon-41	18	10 (.37)
Arsenic-69	33	1000 (37)
Arsenic-70	33	100 (3.7)
Arsenic-71	33	100 (3.7)
Arsenic-72	33	10 (.37)
Arsenic-73	33	100 (3.7)
Arsenic-74	33	10 (.37)
Arsenic-76	33	100 (3.7)
Arsenic-77	33	1000 (37)
Arsenic-78	33	100 (3.7)
Astatine-207	85	100 (3.7)
Astatine-211	85	100 (3.7)
Barium-126	56	1000 (37)
Barium-128	56	10 (.37)
Barium-131	56	10 (.37)
Barium-131m	56	1000 (37)
Barium-133	56	10 (.37)
Barium-133m	56	100 (3.7)
Barium-135m	56	1000 (37)
Barium-139	56	1000 (37)
Barium-140	56	10 (.37)
Barium-141	56	1000 (37)
Barium-142	56	1000 (37)
Berkelium-245	97	100 (3.7)
Berkelium-246	97	10 (.37)
Berkelium-247	97	0.01 (.00037)

TABLE 2.—Radionuclides—Continued

(1)—Radionuclide	(2)—Atomic Number	(3)—Reportable Quantity (RQ) Ci (TBq)
Berkelium-249	97	1 (.037)
Berkelium-250	97	100 (3.7)
Beryllium-10	4	1 (.037)
Beryllium-7	4	100 (3.7)
Bismuth-200	83	100 (3.7)
Bismuth-201	83	100 (3.7)
Bismuth-202	83	1000 (37)
Bismuth-203	83	10 (.37)
Bismuth-205	83	10 (.37)
Bismuth-206	83	10 (.37)
Bismuth-207	83	10 (.37)
Bismuth-210	83	10 (.37)
Bismuth-210m	83	0.1 (.0037)
Bismuth-212	83	100 (3.7)
Bismuth-213	83	100 (3.7)
Bismuth-214	83	100 (3.7)
Bromine-74	35	100 (3.7)
Bromine-74m	35	100 (3.7)
Bromine-75	35	100 (3.7)
Bromine-76	35	10 (.37)
Bromine-77	35	100 (3.7)
Bromine-80	35	1000 (37)
Bromine-80m	35	1000 (37)
Bromine-82	35	10 (.37)
Bromine-83	35	1000 (37)
Bromine-84	35	100 (3.7)
Cadmium-104	48	1000 (37)
Cadmium-107	48	1000 (37)
Cadmium-109	48	1 (.037)
Cadmium-113	48	0.1 (.0037)
Cadmium-113m	48	0.1 (.0037)
Cadmium-115	48	100 (3.7)
Cadmium-115m	48	10 (.37)
Cadmium-117	48	100 (3.7)
Cadmium-117m	48	10 (.37)
Calcium-41	20	10 (.37)
Calcium-45	20	10 (.37)
Calcium-47	20	10 (.37)
Californium-244	98	1000 (37)
Californium-246	98	10 (.37)
Californium-248	98	0.1 (.0037)
Californium-249	98	0.01 (.00037)
Californium-250	98	0.01 (.00037)
Californium-251	98	0.01 (.00037)
Californium-252	98	0.1 (.0037)
Californium-253	98	10 (.37)
Californium-254	98	0.1 (.0037)
Carbon-11	6	1000 (37)
Carbon-14	6	10 (.37)
Cerium-134	58	10 (.37)
Cerium-135	58	10 (.37)
Cerium-137	58	1000 (37)
Cerium-137m	58	100 (3.7)
Cerium-139	58	100 (3.7)
Cerium-141	58	10 (.37)
Cerium-143	58	100 (3.7)
Cerium-144	58	1 (.037)
Cesium-125	55	1000 (37)
Cesium-127	55	100 (3.7)
Cesium-129	55	100 (3.7)
Cesium-130	55	1000 (37)
Cesium-131	55	1000 (37)
Cesium-132	55	10 (.37)
Cesium-134	55	1 (.037)
Cesium-134m	55	1000 (37)
Cesium-135	55	10 (.37)
Cesium-135m	55	100 (3.7)
Cesium-136	55	10 (.37)
Cesium-137	55	1 (.037)
Cesium-138	55	100 (3.7)

TABLE 2.—Radionuclides—Continued

(1)—Radionuclide	(2)—Atomic Number	(3)—Reportable Quantity (RQ) Ci (TBq)
Chlorine-36	17	10 (.37)
Chlorine-38	17	100 (3.7)
Chlorine-39	17	100 (3.7)
Chromium-48	24	100 (3.7)
Chromium-49	24	1000 (37)
Chromium-51	24	1000 (37)
Cobalt-55	27	10 (.37)
Cobalt-56	27	10 (.37)
Cobalt-57	27	100 (3.7)
Cobalt-58	27	10 (.37)
Cobalt-58m	27	1000 (37)
Cobalt-60	27	10 (.37)
Cobalt-60m	27	1000 (37)
Cobalt-61	27	1000 (37)
Cobalt-62m	27	1000 (37)
Copper-60	29	100 (3.7)
Copper-61	29	100 (3.7)
Copper-64	29	1000 (37)
Copper-67	29	100 (3.7)
Curium-238	96	1000 (37)
Curium-240	96	1 (.037)
Curium-241	96	10 (.37)
Curium-242	96	1 (.037)
Curium-243	96	0.01 (.00037)
Curium-244	96	0.01 (.00037)
Curium-245	96	0.01 (.00037)
Curium-246	96	0.01 (.00037)
Curium-247	96	0.01 (.00037)
Curium-248	96	0.001 (.000037)
Curium-249	96	1000 (37)
Dysprosium-155	66	100 (3.7)
Dysprosium-157	66	100 (3.7)
Dysprosium-159	66	100 (3.7)
Dysprosium-165	66	1000 (37)
Dysprosium-166	66	10 (.37)
Einsteinium-250	99	10 (.37)
Einsteinium-251	99	1000 (37)
Einsteinium-253	99	10 (.37)
Einsteinium-254	99	0.1 (.0037)
Einsteinium-254m	99	1 (.037)
Erbium-161	68	100 (3.7)
Erbium-165	68	1000 (37)
Erbium-169	68	100 (3.7)
Erbium-171	68	100 (3.7)
Erbium-172	68	10 (.37)
Europium-145	63	10 (.37)
Europium-146	63	10 (.37)
Europium-147	63	10 (.37)
Europium-148	63	10 (.37)
Europium-149	63	100 (3.7)
Europium-150 (12.6 hr)	63	1000 (37)
Europium-150 (34.2 yr)	63	10 (.37)
Europium-152	63	10 (.37)
Europium-152m	63	100 (3.7)
Europium-154	63	10 (.37)
Europium-155	63	10 (.37)
Europium-156	63	10 (.37)
Europium-157	63	10 (.37)
Europium-158	63	1000 (37)
Fermium-252	100	10 (.37)
Fermium-253	100	10 (.37)
Fermium-254	100	100 (3.7)
Fermium-255	100	100 (3.7)
Fermium-257	100	1 (.037)
Fluorine-18	9	1000 (37)
Francium-222	87	100 (3.7)
Francium-223	87	100 (3.7)
Gadolinium-145	64	100 (3.7)
Gadolinium-146	64	10 (.37)
Gadolinium-147	64	10 (.37)

TABLE 2.—Radionuclides—Continued

(1)—Radionuclide	(2)—Atomic Number	(3)—Reportable Quantity (RQ) Ci (TBq)
Gadolinium-148	64	0.001 (.000037)
Gadolinium-149	64	100 (3.7)
Gadolinium-151	64	100 (3.7)
Gadolinium-152	64	0.001 (.000037)
Gadolinium-153	64	10 (.37)
Gadolinium-159	64	1000 (37)
Gallium-65	31	1000 (37)
Gallium-66	31	10 (.37)
Gallium-67	31	100 (3.7)
Gallium-68	31	1000 (37)
Gallium-70	31	1000 (37)
Gallium-72	31	10 (.37)
Gallium-73	31	100 (3.7)
Germanium-66	32	100 (3.7)
Germanium-67	32	1000 (37)
Germanium-68	32	10 (.37)
Germanium-69	32	10 (.37)
Germanium-71	32	1000 (37)
Germanium-75	32	1000 (37)
Germanium-77	32	10 (.37)
Germanium-78	32	1000 (37)
Gold-193	79	100 (3.7)
Gold-194	79	10 (.37)
Gold-195	79	100 (3.7)
Gold-198	79	100 (3.7)
Gold-198m	79	10 (.37)
Gold-199	79	100 (3.7)
Gold-200	79	1000 (37)
Gold-200m	79	10 (.37)
Gold-201	79	1000 (37)
Hafnium-170	72	100 (3.7)
Hafnium-172	72	1 (.037)
Hafnium-173	72	100 (3.7)
Hafnium-175	72	100 (3.7)
Hafnium-177m	72	1000 (37)
Hafnium-178m	72	0.1 (.0037)
Hafnium-179m	72	100 (3.7)
Hafnium-180m	72	100 (3.7)
Hafnium-181	72	10 (.37)
Hafnium-182	72	0.1 (.0037)
Hafnium-182m	72	100 (3.7)
Hafnium-183	72	100 (3.7)
Hafnium-184	72	100 (3.7)
Holmium-155	67	1000 (37)
Holmium-157	67	1000 (37)
Holmium-159	67	1000 (37)
Holmium-161	67	1000 (37)
Holmium-162	67	1000 (37)
Holmium-162m	67	1000 (37)
Holmium-164	67	1000 (37)
Holmium-164m	67	1000 (37)
Holmium-166	67	100 (3.7)
Holmium-166m	67	1 (.037)
Holmium-167	67	100 (3.7)
Hydrogen-3	1	100 (3.7)
Indium-109	49	100 (3.7)
Indium-110 (4.9 hr)	49	10 (.37)
Indium-110 (69.1 min)	49	100 (3.7)
Indium-111	49	100 (3.7)
Indium-112	49	1000 (37)
Indium-113m	49	1000 (37)
Indium-114m	49	10 (.37)
Indium-115	49	0.1 (.0037)
Indium-115m	49	100 (3.7)
Indium-116m	49	100 (3.7)
Indium-117	49	1000 (37)
Indium-117m	49	100 (3.7)
Indium-119m	49	1000 (37)
Iodine-120	53	10 (.37)
Iodine-120m	53	100 (3.7)

TABLE 2.—Radionuclides—Continued

(1)—Radionuclide	(2)—Atomic Number	(3)—Reportable Quantity (RQ) Ci (TBq)
Iodine-121	53	100 (3.7)
Iodine-123	53	10 (.37)
Iodine-124	53	0.1 (.0037)
Iodine-125	53	0.01 (.00037)
Iodine-126	53	0.01 (.00037)
Iodine-128	53	1000 (37)
Iodine-129	53	0.001 (.000037)
Iodine-130	53	1 (.037)
Iodine-131	53	0.01 (.00037)
Iodine-132	53	10 (.37)
Iodine-132m	53	10 (.37)
Iodine-133	53	0.1 (.0037)
Iodine-134	53	100 (3.7)
Iodine-135	53	10 (.37)
Iridium-182	77	1000 (37)
Iridium-184	77	100 (3.7)
Iridium-185	77	100 (3.7)
Iridium-186	77	10 (.37)
Iridium-187	77	100 (3.7)
Iridium-188	77	10 (.37)
Iridium-189	77	100 (3.7)
Iridium-190	77	10 (.37)
Iridium-190m	77	1000 (37)
Iridium-192	77	10 (.37)
Iridium-192m	77	100 (3.7)
Iridium-194	77	100 (3.7)
Iridium-194m	77	10 (.37)
Iridium-195	77	1000 (37)
Iridium-195m	77	100 (3.7)
Iron-52	26	100 (3.7)
Iron-55	26	100 (3.7)
Iron-59	26	10 (.37)
Iron-60	26	0.1 (.0037)
Krypton-74	36	10 (.37)
Krypton-76	36	10 (.37)
Krypton-77	36	10 (.37)
Krypton-79	36	100 (3.7)
Krypton-81	36	1000 (37)
Krypton-83m	36	1000 (37)
Krypton-85	36	1000 (37)
Krypton-85m	36	100 (3.7)
Krypton-87	36	10 (.37)
Krypton-88	36	10 (.37)
Lanthanum-131	57	1000 (37)
Lanthanum-132	57	100 (3.7)
Lanthanum-135	57	1000 (37)
Lanthanum-137	57	10 (.37)
Lanthanum-138	57	1 (.037)
Lanthanum-140	57	10 (.37)
Lanthanum-141	57	1000 (37)
Lanthanum-142	57	100 (3.7)
Lanthanum-143	57	1000 (37)
Lead-195m	82	1000 (37)
Lead-198	82	100 (3.7)
Lead-199	82	100 (3.7)
Lead-200	82	100 (3.7)
Lead-201	82	100 (3.7)
Lead-202	82	1 (.037)
Lead-202m	82	10 (.37)
Lead-203	82	100 (3.7)
Lead-205	82	100 (3.7)
Lead-209	82	1000 (37)
Lead-210	82	0.01 (.00037)
Lead-211	82	100 (3.7)
Lead-212	82	10 (.37)
Lead-214	82	100 (3.7)
Lutetium-169	71	10 (.37)
Lutetium-170	71	10 (.37)
Lutetium-171	71	10 (.37)
Lutetium-172	71	10 (.37)

TABLE 2.—Radionuclides—Continued

(1)—Radionuclide	(2)—Atomic Number	(3)—Reportable Quantity (RQ) Ci (TBq)
Lutetium-173	71	100 (3.7)
Lutetium-174	71	10 (.37)
Lutetium-174m	71	10 (.37)
Lutetium-176	71	1 (.037)
Lutetium-176m	71	1000 (37)
Lutetium-177	71	100 (3.7)
Lutetium-177m	71	10 (.37)
Lutetium-178	71	1000 (37)
Lutetium-178m	71	1000 (37)
Lutetium-179	71	1000 (37)
Magnesium-28	12	10 (.37)
Manganese-51	25	1000 (37)
Manganese-52	25	10 (.37)
Manganese-52m	25	1000 (37)
Manganese-53	25	1000 (37)
Manganese-54	25	10 (.37)
Manganese-56	25	100 (3.7)
Mendelevium-257	101	100 (3.7)
Mendelevium-258	101	1 (.037)
Mercury-193	80	100 (3.7)
Mercury-193m	80	10 (.37)
Mercury-194	80	0.1 (.0037)
Mercury-195	80	100 (3.7)
Mercury-195m	80	100 (3.7)
Mercury-197	80	1000 (37)
Mercury-197m	80	1000 (37)
Mercury-199m	80	1000 (37)
Mercury-203	80	10 (.37)
Molybdenum-101	42	1000 (37)
Molybdenum-90	42	100 (3.7)
Molybdenum-93	42	100 (3.7)
Molybdenum-93m	42	10 (.37)
Molybdenum-99	42	100 (3.7)
Neodymium-136	60	1000 (37)
Neodymium-138	60	1000 (37)
Neodymium-139	60	1000 (37)
Neodymium-139m	60	100 (3.7)
Neodymium-141	60	1000 (37)
Neodymium-147	60	10 (.37)
Neodymium-149	60	100 (3.7)
Neodymium-151	60	1000 (37)
Neptunium-232	93	1000 (37)
Neptunium-233	93	1000 (37)
Neptunium-234	93	10 (.37)
Neptunium-235	93	1000 (37)
Neptunium-236 (1.2 E 5 yr)	93	0.1 (.0037)
Neptunium-236 (22.5 hr)	93	100 (3.7)
Neptunium-237	93	0.01 (.00037)
Neptunium-238	93	10 (.37)
Neptunium-239	93	100 (3.7)
Neptunium-240	93	100 (3.7)
Nickel-56	28	10 (.37)
Nickel-57	28	10 (.37)
Nickel-59	28	100 (3.7)
Nickel-63	28	100 (3.7)
Nickel-65	28	100 (3.7)
Nickel-66	28	10 (.37)
Niobium-88	41	100 (3.7)
Niobium-89 (122 min)	41	100 (3.7)
Niobium-89 (66 min)	41	100 (3.7)
Niobium-90	41	10 (.37)
Niobium-93m	41	100 (3.7)
Niobium-94	41	10 (.37)
Niobium-95	41	10 (.37)
Niobium-95m	41	100 (3.7)
Niobium-96	41	10 (.37)
Niobium-97	41	100 (3.7)
Niobium-98	41	1000 (37)
Osmium-180	76	1000 (37)
Osmium-181	76	100 (3.7)

TABLE 2.—Radionuclides—Continued

(1)—Radionuclide	(2)—Atomic Number	(3)—Reportable Quantity (RQ) Ci (TBq)
Osmium-182	76	100 (3.7)
Osmium-185	76	10 (.37)
Osmium-189m	76	1000 (37)
Osmium-191	76	100 (3.7)
Osmium-191m	76	1000 (37)
Osmium-193	76	100 (3.7)
Osmium-194	76	1 (.037)
Palladium-100	46	100 (3.7)
Palladium-101	46	100 (3.7)
Palladium-103	46	100 (3.7)
Palladium-107	46	100 (3.7)
Palladium-109	46	1000 (37)
Phosphorus-32	15	0.1 (.0037)
Phosphorus-33	15	1 (.037)
Platinum-186	78	100 (3.7)
Platinum-188	78	100 (3.7)
Platinum-189	78	100 (3.7)
Platinum-191	78	100 (3.7)
Platinum-193	78	1000 (37)
Platinum-193m	78	100 (3.7)
Platinum-195m	78	100 (3.7)
Platinum-197	78	1000 (37)
Platinum-197m	78	1000 (37)
Platinum-199	78	1000 (37)
Platinum-200	78	100 (3.7)
Plutonium-234	94	1000 (37)
Plutonium-235	94	1000 (37)
Plutonium-236	94	0.1 (.0037)
Plutonium-237	94	1000 (37)
Plutonium-238	94	0.01 (.00037)
Plutonium-239	94	0.01 (.00037)
Plutonium-240	94	0.01 (.00037)
Plutonium-241	94	1 (.037)
Plutonium-242	94	0.01 (.00037)
Plutonium-243	94	1000 (37)
Plutonium-244	94	0.01 (.00037)
Plutonium-245	94	100 (3.7)
Polonium-203	84	100 (3.7)
Polonium-205	84	100 (3.7)
Polonium-207	84	10 (.37)
Polonium-210	84	0.01 (.00037)
Potassium-40	19	1 (.037)
Potassium-42	19	100 (3.7)
Potassium-43	19	10 (.37)
Potassium-44	19	100 (3.7)
Potassium-45	19	1000 (37)
Praseodymium-136	59	1000 (37)
Praseodymium-137	59	1000 (37)
Praseodymium-138m	59	100 (3.7)
Praseodymium-139	59	1000 (37)
Praseodymium-142	59	100 (3.7)
Praseodymium-142m	59	1000 (37)
Praseodymium-143	59	10 (.37)
Praseodymium-144	59	1000 (37)
Praseodymium-145	59	1000 (37)
Praseodymium-147	59	1000 (37)
Promethium-141	61	1000 (37)
Promethium-143	61	100 (3.7)
Promethium-144	61	10 (.37)
Promethium-145	61	100 (3.7)
Promethium-146	61	10 (.37)
Promethium-147	61	10 (.37)
Promethium-148	61	10 (.37)
Promethium-148m	61	10 (.37)
Promethium-149	61	100 (3.7)
Promethium-150	61	100 (3.7)
Promethium-151	61	100 (3.7)
Protactinium-227	91	100 (3.7)
Protactinium-228	91	10 (.37)
Protactinium-230	91	10 (.37)

TABLE 2.—Radionuclides—Continued

(1)—Radionuclide	(2)—Atomic Number	(3)—Reportable Quantity (RQ) Ci (TBq)
Protactinium-231	91	0.01 (.00037)
Protactinium-232	91	10 (.37)
Protactinium-233	91	100 (3.7)
Protactinium-234	91	10 (.37)
RADIONUCLIDES $ †		1 (.037)
Radium-223	88	1 (.037)
Radium-224	88	10 (.37)
Radium-225	88	1 (.037)
Radium-226 **	88	0.1 (.0037)
Radium-227	88	1000 (37)
Radium-228	88	0.1 (.0037)
Radon-220	86	0.1 (.0037)
Radon-222	86	0.1 (.0037)
Rhenium-177	75	1000 (37)
Rhenium-178	75	1000 (37)
Rhenium-181	75	100 (3.7)
Rhenium-182 (12.7 hr)	75	10 (.37)
Rhenium-182 (64.0 hr)	75	10 (.37)
Rhenium-184	75	10 (.37)
Rhenium-184m	75	10 (.37)
Rhenium-186	75	100 (3.7)
Rhenium-186m	75	10 (.37)
Rhenium-187	75	1000 (37)
Rhenium-188	75	1000 (37)
Rhenium-188m	75	1000 (37)
Rhenium-189	75	1000 (37)
Rhodium-100	45	10 (.37)
Rhodium-101	45	10 (.37)
Rhodium-101m	45	100 (3.7)
Rhodium-102	45	10 (.37)
Rhodium-102m	45	10 (.37)
Rhodium-103m	45	1000 (37)
Rhodium-105	45	100 (3.7)
Rhodium-106m	45	10 (.37)
Rhodium-107	45	1000 (37)
Rhodium-99	45	10 (.37)
Rhodium-99m	45	100 (3.7)
Rubidium-79	37	1000 (37)
Rubidium-81	37	100 (3.7)
Rubidium-81m	37	1000 (37)
Rubidium-82m	37	10 (.37)
Rubidium-83	37	10 (.37)
Rubidium-84	37	10 (.37)
Rubidium-86	37	10 (.37)
Rubidium-87	37	10 (.37)
Rubidium-88	37	1000 (37)
Rubidium-89	37	1000 (37)
Ruthenium-103	44	10 (.37)
Ruthenium-105	44	100 (3.7)
Ruthenium-106	44	1 (.037)
Ruthenium-94	44	1000 (37)
Ruthenium-97	44	100 (3.7)
Samarium-141	62	1000 (37)
Samarium-141m	62	1000 (37)
Samarium-142	62	1000 (37)
Samarium-145	62	100 (3.7)
Samarium-146	62	0.01 (.00037)
Samarium-147	62	0.01 (.00037)
Samarium-151	62	10 (.37)
Samarium-153	62	100 (3.7)
Samarium-155	62	1000 (37)
Samarium-156	62	100 (3.7)
Scandium-43	21	1000 (37)
Scandium-44	21	100 (3.7)
Scandium-44m	21	10 (.37)
Scandium-46	21	10 (.37)
Scandium-47	21	100 (3.7)
Scandium-48	21	10 (.37)
Scandium-49	21	1000 (37)
Selenium-70	34	1000 (37)

TABLE 2.—Radionuclides—Continued

(1)—Radionuclide	(2)—Atomic Number	(3)—Reportable Quantity (RQ) Ci (TBq)
Selenium-73	34	10 (.37)
Selenium-73m	34	100 (3.7)
Selenium-75	34	10 (.37)
Selenium-79	34	10 (.37)
Selenium-81	34	1000 (37)
Selenium-81m	34	1000 (37)
Selenium-83	34	1000 (37)
Silicon-31	14	1000 (37)
Silicon-32	14	1 (.037)
Silver-102	47	100 (3.7)
Silver-103	47	1000 (37)
Silver-104	47	1000 (37)
Silver-104m	47	1000 (37)
Silver-105	47	10 (.37)
Silver-106	47	1000 (37)
Silver-106m	47	10 (.37)
Silver-108m	47	10 (.37)
Silver-110m	47	10 (.37)
Silver-111	47	10 (.37)
Silver-112	47	100 (3.7)
Silver-115	47	1000 (37)
Sodium-22	11	10 (.37)
Sodium-24	11	10 (.37)
Strontium-80	38	100 (3.7)
Strontium-81	38	1000 (37)
Strontium-83	38	100 (3.7)
Strontium-85	38	10 (.37)
Strontium-85m	38	1000 (37)
Strontium-87m	38	100 (3.7)
Strontium-89	38	10 (.37)
Strontium-90	38	0.1 (.0037)
Strontium-91	38	10 (.37)
Strontium-92	38	100 (3.7)
Sulfur-35	16	1 (.037)
Tantalum-172	73	100 (3.7)
Tantalum-173	73	100 (3.7)
Tantalum-174	73	100 (3.7)
Tantalum-175	73	100 (3.7)
Tantalum-176	73	10 (.37)
Tantalum-177	73	1000 (37)
Tantalum-178	73	1000 (37)
Tantalum-179	73	1000 (37)
Tantalum-180	73	100 (3.7)
Tantalum-180m	73	1000 (37)
Tantalum-182	73	10 (.37)
Tantalum-182m	73	1000 (37)
Tantalum-183	73	100 (3.7)
Tantalum-184	73	10 (.37)
Tantalum-185	73	1000 (37)
Tantalum-186	73	1000 (37)
Technetium-101	43	1000 (37)
Technetium-104	43	1000 (37)
Technetium-93	43	100 (3.7)
Technetium-93m	43	1000 (37)
Technetium-94	43	10 (.37)
Technetium-94m	43	100 (3.7)
Technetium-96	43	10 (.37)
Technetium-96m	43	1000 (37)
Technetium-97	43	100 (3.7)
Technetium-97m	43	100 (3.7)
Technetium-98	43	10 (.37)
Technetium-99	43	10 (.37)
Technetium-99m	43	100 (3.7)
Tellurium-116	52	1000 (37)
Tellurium-121	52	10 (.37)
Tellurium-121m	52	10 (.37)
Tellurium-123	52	10 (.37)
Tellurium-123m	52	10 (.37)
Tellurium-125m	52	10 (.37)
Tellurium-127	52	1000 (37)

TABLE 2.—Radionuclides—Continued

(1)—Radionuclide	(2)—Atomic Number	(3)—Reportable Quantity (RQ) Ci (TBq)
Tellurium-127m	52	10 (.37)
Tellurium-129	52	1000 (37)
Tellurium-129m	52	10 (.37)
Tellurium-131	52	1000 (37)
Tellurium-131m	52	10 (.37)
Tellurium-132	52	10 (.37)
Tellurium-133	52	1000 (37)
Tellurium-133m	52	1000 (37)
Tellurium-134	52	1000 (37)
Terbium-147	65	100 (3.7)
Terbium-149	65	100 (3.7)
Terbium-150	65	100 (3.7)
Terbium-151	65	10 (.37)
Terbium-153	65	100 (3.7)
Terbium-154	65	10 (.37)
Terbium-155	65	100 (3.7)
Terbium-156	65	10 (.37)
Terbium-156m (24.4 hr)	65	1000 (37)
Terbium-156m (5.0 hr)	65	1000 (37)
Terbium-157	65	100 (3.7)
Terbium-158	65	10 (.37)
Terbium-160	65	10 (.37)
Terbium-161	65	100 (3.7)
Thallium-194	81	1000 (37)
Thallium-194m	81	100 (3.7)
Thallium-195	81	100 (3.7)
Thallium-197	81	100 (3.7)
Thallium-198	81	10 (.37)
Thallium-198m	81	100 (3.7)
Thallium-199	81	100 (3.7)
Thallium-200	81	10 (.37)
Thallium-201	81	1000 (37)
Thallium-202	81	10 (.37)
Thallium-204	81	10 (.37)
Thorium (Irradiated)	90	***
Thorium (Natural)	90	**
Thorium-226	90	100 (3.7)
Thorium-227	90	1 (.037)
Thorium-228	90	0.01 (.00037)
Thorium-229	90	0.001 (.000037)
Thorium-230	90	0.01 (.00037)
Thorium-231	90	100 (3.7)
Thorium-232 **	90	0.001 (.000037)
Thorium-234	90	100 (3.7)
Thulium-162	69	1000 (37)
Thulium-166	69	10 (.37)
Thulium-167	69	100 (3.7)
Thulium-170	69	10 (.37)
Thulium-171	69	100 (3.7)
Thulium-172	69	100 (3.7)
Thulium-173	69	100 (3.7)
Thulium-175	69	1000 (37)
Tin-110	50	100 (3.7)
Tin-111	50	1000 (37)
Tin-113	50	10 (.37)
Tin-117m	50	100 (3.7)
Tin-119m	50	10 (.37)
Tin-121	50	1000 (37)
Tin-121m	50	10 (.37)
Tin-123	50	10 (.37)
Tin-123m	50	1000 (37)
Tin-125	50	10 (.37)
Tin-126	50	1 (.037)
Tin-127	50	100 (3.7)
Tin-128	50	1000 (37)
Titanium-44	22	1 (.037)
Titanium-45	22	1000 (37)
Tungsten-176	74	1000 (37)
Tungsten-177	74	100 (3.7)
Tungsten-178	74	100 (3.7)

TABLE 2.—Radionuclides—Continued

(1)—Radionuclide	(2)—Atomic Number	(3)—Reportable Quantity (RQ) Ci (TBq)
Tungsten-179	74	1000 (37)
Tungsten-181	74	100 (3.7)
Tungsten-185	74	10 (.37)
Tungsten-187	74	100 (3.7)
Tungsten-188	74	10 (.37)
Uranium (Depleted)	92	***
Uranium (Irradiated)	92	***
Uranium (Natural)	92	**
Uranium Enriched 20% or greater	92	***
Uranium Enriched less than 20%	92	***
Uranium-230	92	1 (.037)
Uranium-231	92	1000 (37)
Uranium-232	92	0.01 (.00037)
Uranium-233	92	0.1 (.0037)
Uranium-234 **	92	0.1 (.0037)
Uranium-235 **	92	0.1 (.0037)
Uranium-236	92	0.1 (.0037)
Uranium-237	92	100 (3.7)
Uranium-238 **	92	0.1 (.0037)
Uranium-239	92	1000 (37)
Uranium-240	92	1000 (37)
Vanadium-47	23	1000 (37)
Vanadium-48	23	10 (.37)
Vanadium-49	23	1000 (37)
Xenon-120	54	100 (3.7)
Xenon-121	54	10 (.37)
Xenon-122	54	100 (3.7)
Xenon-123	54	10 (.37)
Xenon-125	54	100 (3.7)
Xenon-127	54	100 (3.7)
Xenon-129m	54	1000 (37)
Xenon-131m	54	1000 (37)
Xenon-133	54	1000 (37)
Xenon-133m	54	1000 (37)
Xenon-135	54	100 (3.7)
Xenon-135m	54	10 (.37)
Xenon-138	54	10 (.37)
Ytterbium-162	70	1000 (37)
Ytterbium-166	70	10 (.37)
Ytterbium-167	70	1000 (37)
Ytterbium-169	70	10 (.37)
Ytterbium-175	70	100 (3.7)
Ytterbium-177	70	1000 (37)
Ytterbium-178	70	1000 (37)
Yttrium-86	39	10 (.37)
Yttrium-86m	39	1000 (37)
Yttrium-87	39	10 (.37)
Yttrium-88	39	10 (.37)
Yttrium-90	39	10 (.37)
Yttrium-90m	39	100 (3.7)
Yttrium-91	39	10 (.37)
Yttrium-91m	39	1000 (37)
Yttrium-92	39	100 (3.7)
Yttrium-93	39	100 (3.7)
Yttrium-94	39	1000 (37)
Yttrium-95	39	1000 (37)
Zinc-62	30	100 (3.7)
Zinc-63	30	1000 (37)
Zinc-65	30	10 (.37)
Zinc-69	30	1000 (37)
Zinc-69m	30	100 (3.7)
Zinc-71m	30	100 (3.7)
Zinc-72	30	100 (3.7)
Zirconium-86	40	100 (3.7)
Zirconium-88	40	10 (.37)
Zirconium-89	40	100 (3.7)
Zirconium-93	40	1 (.037)
Zirconium-95	40	10 (.37)

TABLE 2.—Radionuclides—Continued

(1)—Radionuclide	(2)—Atomic Number	(3)—Reportable Quantity (RQ) Ci (TBq)
Zirconium-97	40	10 (.37)

$ The RQs for all radionuclides apply to chemical compounds containing the radionuclides and elemental forms regardless of the diameter of pieces of solid material.

EEE† The RQ of one curie applies to all radionuclides not otherwise listed. Whenever the RQs in TABLE 1—HAZARDOUS SUBSTANCES OTHER THAN RADIONUCLIDES and this table conflict, the lowest RQ shall apply. For example, uranyl acetate and uranyl nitrate have RQs shown in TABLE 1 of 100 pounds, equivalent to about one-tenth the RQ level for uranium-238 in this table.

** The method to determine the RQs for mixtures or solutions of radionuclides can be found in paragraph 6 of the note preceding TABLE 1 of this appendix. RQs for the following four common radionuclide mixtures are provided: radium-226 in secular equilibrium with its daughters (0.053 curie); natural uranium (0.1 curie); natural uranium in secular equilibrium with its daughters (0.052 curie); and natural thorium in secular equilibrium with its daughters (0.011 curie).

*** Indicates that the name was added by RSPA because it appears in the list of radionuclides in 49 CFR 173.435. The reportable quantity (RQ), if not specifically listed elsewhere in this appendix, shall be determined in accordance with the procedures in paragraph 6 of this appendix.

[Amdt. 172–122, 55 FR 46798, Nov. 7, 1990]

EDITORIAL NOTE: For FEDERAL REGISTER citations affecting Appendix A to §172.102, see the List of CFR Sections Affected in the Finding Aids section of this volume.

APPENDIX B TO §172.101—LIST OF MARINE POLLUTANTS

1. This appendix lists potential marine pollutants as defined in §171.8 of this subchapter.

2. If a marine pollutant meets the definition of any hazard class or division as defined in this subchapter, other than Class 9, the class of the material must be determined in accordance with §173.2a of this subchapter.

3. This appendix contains two columns. The first column, entitled ''S.M.P.'' (for severe marine pollutants), identifies whether a material is a severe marine pollutant. If the letters ''PP'' appear in this column for a material, the material is a severe marine pollutant, otherwise it is not. The second column, entitled ''Marine Pollutant'' , lists the marine pollutants.

4. If a material not listed in this appendix meets the criteria for a marine pollutant, as provided in the General Introduction of the IMDG Code, Guidelines for the Identification of Harmful Substances in Packaged Form, the material may be transported as a marine pollutant in accordance with the applicable requirements of this subchapter.

5. If approved by the Associate Administrator for Hazardous Materials Safety, a material listed in this appendix which does not meet the criteria for a marine pollutant, as provided in the General Introduction of the

IMDG Code, Guidelines for the Identification of Harmful Substances in Packaged Form, is excepted from the requirements of this subchapter as a marine pollutant.

APPENDIX B TO § 172.101 List of Marine Pollutants

S.M.P.	Marine Pollutant
(1)	(2)
.....	Acetal
.....	Acetaldehyde.
.....	Acetone cyanohydrin, stabilized
.....	Acetylene tetrabromide
.....	Acetylene tetrachloride
.....	Acraldehyde, inhibited
.....	Acrolein, inhibited
.....	Acrylic aldehyde, inhibited
.....	Alcohol C-12 - C-15 poly(1-3) ethoxylate
.....	Alcohol C-13 - C-15 poly(1-6) ethoxylate
.....	Alcohol C-6 - C-17 (secondary)poly(3-6) ethoxylate
.....	Aldicarb
PP	Aldrin
.....	Alkyl (c12-c14) dimethylamine
.....	Alkyl (c7-c9) nitrates
.....	Alkyl (C10-C21) sulphonic acid ester of phenol.
.....	Alkylphenols, liquid, n.o.s. *(including C2-C8 homologues)*
.....	Alkylphenols, solid, n.o.s. *(including C2-C8 homologues)*
.....	Allyl bromide
.....	ortho-Aminoanisole
.....	Aminocarb
.....	Ammonium dinitro-o-cresolate
.....	n-Amylbenzene
.....	Amyl mercaptans
.....	ortho-Anisidines
.....	Anisole.
PP	Azinphos-ethyl
.....	Azinphos-methyl.
.....	Barium compounds, soluble, n.o.s.
.....	Barium cyanide
.....	Bendiocarb
.....	Benomyl
.....	Benquinox
.....	Benzaldehyde.
.....	Benzyl chlorocarbonate
.....	Benzyl chloroformate
PP	Binapacryl
.....	*N,N-Bis* (2-hydroxyethyl) oleamide (LOA).
PP	Brodifacoum
.....	Bromine cyanide
.....	Bromoacetone
.....	Bromoallylene
.....	Bromobenzene.
.....	ortho-Bromobenzyl cyanide
.....	Bromocyane
.....	Bromoform
PP	Bromophos-ethyl
.....	3-Bromopropene
.....	Bromoxynil
.....	Butanedione.
.....	2-Butenal, inhibited
.....	Butyl benzenes
.....	Butyl benzyl phthalate
.....	n-Butyl butyrate
.....	*N-tert*-butyl-*N*-cyclopropyl-6-methylthio-1,3,5-triazine-2,4-diamine.
.....	Butyl mercaptans.
.....	Butylphenols, liquid
.....	Butylphenols, solid
.....	2,4-Di-tert-butylphenol.

APPENDIX B TO § 172.101 List of Marine Pollutants—Continued

S.M.P.	Marine Pollutant
(1)	(2)
.....	2,6-Di-tert-butylphenol.
.....	para-tertiary-butyltoluene
.....	Butyraldehyde.
PP	Cadmium compounds
.....	Cadmium sulphide
.....	Calcium arsenate
.....	Calcium arsenate and calcium arsenite, mixtures, solid
.....	Calcium cyanide
.....	Calcium naphthenate
PP	Camphechlor
.....	Camphor oil.
.....	Carbaryl
.....	Carbendazim
.....	Carbofuran
.....	Carbon tetrabromide
.....	Carbon tetrachloride
PP	Carbophenothion
.....	Cartap hydrochloride
PP	Chlordane
.....	Chlorfenvinphos
PP	Chlorinated paraffins (C-10 - C-13)
.....	Chlorine
.....	Chlorine cyanide, inhibited
.....	Chlormephos
.....	Chloroacetone, stabilized
.....	2-Chloro-6-nitrotoluene
.....	4-Chloro-2-nitrotoluene
.....	Chloro-ortho-nitrotoluene
.....	2-Chloro-5-trifluoromethylnitrobenzene
.....	para-Chlorobenzyl chloride, liquid or solid
.....	Chlorodinitrobenzenes
.....	1-Chloroheptane
.....	1-Chlorohexane
.....	Chloronitroanilines
.....	Chloronitrotoluenes *liquid*
.....	Chloronitrotoluenes, *solid*
.....	1-Chlorooctane
PP	Chlorophenates, liquid
PP	Chlorophenates, solid
.....	Chlorophenols, liquid
.....	Chlorophenols, solid
.....	Chlorophenyltrichlorosilane
.....	alpha-Chloropropylene
.....	Chlorotoluenes
PP	Chlorpyriphos
PP	Chlorthiophos
.....	Coal tar
.....	Coal tar naphtha
.....	Cocculus
.....	Coconitrile.
.....	Copper acetoarsenite
.....	Copper arsenite
.....	Copper chloride
PP	Copper chloride solution
PP	Copper cyanide
PP	Copper metal powder
.....	Coumachlor
PP	Coumaphos
.....	Creosote (coal tar)
.....	Creosote (wood tar)
.....	Cresols *(o-; m-; p-)*
PP	Cresyl diphenyl phosphate
.....	Cresylic acid
.....	Cresylic acid sodium salt
.....	Crotonaldehyde, inhibited
.....	Crotonic aldehyde
.....	Crotoxyphos
.....	Cumene
.....	Cupric arsenite

APPENDIX B TO § 172.101 List of Marine Pollutants—Continued

S.M.P.	Marine Pollutant
(1)	(2)
.....	Cupric chloride
PP	Cupric cyanide
PP	Cupric sulfate
.....	Cupriethylenediamine solution
.....	Cuprous chloride
.....	Cyanide mixtures
.....	Cyanide solutions
.....	Cyanides, inorganic, n.o.s.
.....	Cyanogen bromide
.....	Cyanogen chloride, inhibited
.....	Cyanophos
PP	1,5,9-Cyclododecatriene
PP	Cyhexatin
PP	Cymenes (o-;m-;p-).
PP	Cypermethrin
.....	2,4-D
PP	DDT
.....	*normal*-Decaldehyde.
.....	*normal*-Decanol.
.....	Decyl acrylate
.....	Decyloxytetrahydrothiophene dioxide
.....	DEF
.....	Di-allate
.....	Di-n-Butyl phthalate
PP	Dialifos
.....	4,4'-Diaminodiphenylmethane
PP	Diazinon
.....	1,3-Dibromobenzene.
.....	Di-*normal*-butyl ketone.
PP	Dichlofenthion
.....	Dichloroanilines
.....	1,3-Dichlorobenzene
.....	1,2-Dichlorobenzene
.....	1,4-Dichlorobenzene
.....	Dichlorobenzene (meta; ortho; para)
.....	2,2-Dichlorodiethyl ether
.....	Dichloroethyl ether
.....	1,1-Dichloroethylene, inhibited
.....	1,6-Dichlorohexane
.....	Dichlorophenols, liquid
.....	Dichlorophenols, solid
.....	2,4-Dichlorophenoxyacetic acid (see also 2,4D)
.....	2,4-Dichlorophenoxyacetic acid diethanolamine salt
.....	2,4-Dichlorophenoxyacetic acid dimethylamine salt
.....	2,4-Dichlorophenoxyacetic acid triisopropylamine salt
.....	Dichlorophenyltrichlorosilane
PP	Dichlorvos
.....	Dicrotophos
PP	Dieldrin
.....	Diethybenzenes (mixed isomers)
.....	Diisopropylbenzenes
.....	Diisopropylnaphthalene
PP	Dimethoate
.....	Dimethyl disulphide.
.....	Dimethyl glyoxal (butanedione)
.....	Dimethyl sulphide
.....	Dimethylhydrazine, symmetrical.
.....	Dimethylhydrazine, unsymmetrical.
.....	Dimethylphenols, liquid or solid
.....	Dinitro-o-cresol, *solid*
.....	Dinitro-o-cresol, *solution*
.....	Dinitrochlorobenzenes, liquid or solid
.....	Dinitrophenol, *dry or wetted with less than 15 per cent water, by mass*
.....	Dinitrophenol solutions

APPENDIX B TO § 172.101 List of Marine Pollutants—Continued

S.M.P.	Marine Pollutant
(1)	(2)
.....	Dinitrophenol, wetted *with not less than 15 per cent water, by mass*
.....	Dinitrophenolates *alkali metals, dry or wetted with less than 15 per cent water, by mass*
.....	Dinitrophenolates, wetted *with not less than 15 per cent water, by mass*
.....	Dinobuton
.....	Dinoseb
.....	Dinoseb acetate
.....	Dioxacarb
.....	Dioxathion
.....	Dipentene.
.....	Diphacinone
.....	Diphenyl
.....	Diphenyl ether
.....	Diphenyl ether/biphenyl phenyl ether mixtures.
.....	Diphenyl/diphenyl ether (mixtures).
.....	Diphenyl oxide
.....	Diphenyl oxide and biphenyl phenyl ether mixtures
PP	Diphenylamine chloroarsine
PP	Diphenylchloroarsine, solid *or* liquid
.....	Disulfoton
.....	1,4-Di-tert-butylbenzene
.....	DNOC
.....	DNOC (pesticide)
.....	Dodecyl diphenyl oxide disulphonate
.....	Dodecyl hydroxypropyl sulfide
.....	Dodecylamine
PP	Dodecylphenol
.....	Drazoxolon
.....	Edifenphos
PP	Endosulfan
PP	Endrin
.....	Epibromohydrin
.....	Epichlorohydrin
PP	EPN
.....	EPTC (ISO).
PP	Esfenvalerate
PP	Ethion
.....	Ethoprophos
.....	Ethyl acrylate, inhibited
.....	Ethyl chlorothioformate
.....	Ethyl fluid
.....	Ethyl mercaptan
.....	1-Ethyl-2-methylbenzene
.....	2-Ethylhexyl nitrate
.....	5-Ethyl-2-picoline
.....	Ethyl propenoate, inhibited
.....	2-Ethyl-3-propylacrolein
.....	Ethyl tetraphosphate
.....	2-Ethylbutyraldehyde
.....	Ethyldichloroarsine
.....	Ethylene dibromide and methyl bromide mixtures, liquid
.....	2-Ethylhexaldehyde
.....	2-Ethylhexenal
.....	Fenaminphos
PP	Fenbutatin oxide
PP	Fenitrothion
PP	Fenpropathrin
.....	Fensulfothion
PP	Fenthion
PP	Fentin acetate
PP	Fentin hydroxide
.....	Ferric arsenate
.....	Ferric arsenite
.....	Ferrous arsenate
PP	Fonofos

APPENDIX B TO § 172.101 List of Marine Pollutants—Continued

S.M.P.	Marine Pollutant
(1)	(2)
.....	Formetanate
.....	Furathiocarb (ISO).
PP	gamma-BHC
.....	Gasoline, leaded
PP	Heptachlor
.....	Heptenophos
PP	*normal*-Heptyl aldehyde.
.....	normal-Heptyl chloride
.....	n-Heptylbenzene
PP	Hexachlorobutadiene
PP	1,3-Hexachlorobutadiene
.....	2,4-Hexadiene aldehyde.
.....	Hexaethyl tetraphosphate *liquid*
.....	Hexaethyl tetraphosphate, *solid*
.....	normal-Hexyl chloride
.....	*normal*-Hexaldehyde.
.....	n-Hexylbenzene
.....	Hydrocyanic acid, anhydrous, stabilized
.....	Hydrocyanic acid, anhydrous, stabilized, absorbed in a porous inert material
.....	Hydrocyanic acid, aqueous solutions *not more than 20% hydrocyanic acid*
.....	Hydrogen cyanide solution in alcohol, *with not more than* 45% hydrogen cyanide.
.....	Hydrogen cyanide, stabilized *with less than 3% water.*
.....	Hydrogen cyanide, stabilized *with less than 3% water and absorbed in a porous inert material.*
.....	Hydroxydimethylbenzenes, liquid or solid
.....	Ioxynil
.....	Iron oxide, spent
.....	Iron sponge, spent.
.....	Isoamyl mercaptan
.....	Isobenzan
.....	Isobutyl butyrate
.....	Isobutyl isobutyrate
.....	Isobutyl propionate
.....	Isobutybenzene
.....	Isodecaldehyde.
.....	Isodecanol.
.....	Isodecyl acrylate
.....	Isodecyl diphenyl phosphate
.....	Isofenphos
.....	Isononanol.
.....	Isooctanol.
.....	Isooctyl nitrate
.....	Isoprocarb
.....	Isopropenyl chloride
.....	Isopropenylbenzene
.....	Isopropyl chloride
.....	Isopropylbenzene
.....	Isotetramethylbenzene.
.....	Isovaleraldehyde.
PP	Isoxathion
.....	Lead acetate
.....	Lead arsenates
.....	Lead arsenites
.....	Lead compounds, soluble, n.o.s.
.....	Lead cyanide
.....	Lead nitrate
.....	Lead perchlorate, solid or solution
.....	Lead tetraethyl
.....	Lead tetramethyl
PP	Lindane
.....	London Purple
.....	Magnesium arsenate
.....	Malathion
.....	Mancozeb (ISO).

APPENDIX B TO § 172.101 List of Marine Pollutants—Continued

S.M.P.	Marine Pollutant
(1)	(2)
.....	Maneb *or* Maneb preparations *with not less than 60 per cent maneb*
.....	Maneb stabilized *or* Maneb preparations, stabilized *against self-heating*
.....	Manganese ethylene-1,2-bis dithiocarbamate
.....	Manganese ethylene-1,2-bis-dithiocarbamate, stabilized against self-heating
.....	Mephosfolan
.....	Mercaptodimethur
.....	Mercarbam
PP	Mercuric acetate
PP	Mercuric ammonium chloride
PP	Mercuric arsenate
PP	Mercuric benzoate
PP	Mercuric bisulphate
PP	Mercuric bromide
PP	Mercuric chloride
PP	Mercuric cyanide
PP	Mercuric gluconate
.....	Mercuric iodide
PP	Mercuric nitrate
PP	Mercuric oleate
PP	Mercuric oxide
PP	Mercuric oxycyanide, desensitized
PP	Mercuric potassium cyanide
PP	Mercuric Sulphate
PP	Mercuric thiocyanate
PP	Mercurol
PP	Mercurous acetate
PP	Mercurous bisuphate
PP	Mercurous bromide
PP	Mercurous chloride
PP	Mercurous nitrate
PP	Mercurous salicylate
PP	Mercurous sulphate
PP	Mercury acetates
PP	Mercury ammonium chloride
PP	Mercury based pesticides, liquid, flammable, toxic, n.o.s.
PP	Mercury based pesticides, liquid, toxic, flammable, n.o.s.
PP	Mercury based pesticides, liquid, toxic, n.o.s.
PP	Mercury based pesticides, solid, toxic, n.o.s.
PP	Mercury benzoate
PP	Mercury bichloride
PP	Mercury bisulphates
PP	Mercury bromides
PP	Mercury compounds, liquid, n.o.s.
PP	Mercury compounds, solid, n.o.s.
PP	Mercury cyanide
PP	Mercury gluconate
PP	Mercury (I) (mercurous) compounds (pesticides)
PP	Mercury (II) (mercuric) compounds (pesticides)
.....	Mercury iodide
PP	Mercury nucleate
PP	Mercury oleate
PP	Mercury oxide
PP	Mercury oxycyanide, desensitized
PP	Mercury potassium cyanide
PP	Mercury potassium iodide
PP	Mercury salicylate
PP	Mercury sulfates
PP	Mercury thiocyanate
.....	Metam-sodium
.....	Methamidophos
.....	Methanethiol
.....	Methidathion
.....	Methomyl

APPENDIX B TO § 172.101 List of Marine Pollutants—Continued

S.M.P.	Marine Pollutant
(1)	(2)
.....	ortho-Methoxyaniline
.....	Methyl bromide and ethylene dibromide mixtures, liquid
.....	1-Methyl-2-ethylbenzene
.....	1-Methyl-4-ethylbenzene
.....	2-Methyl-5-ethylpyridine
.....	Methyl mercaptan
.....	2-Methyl-2-phenylpropane
.....	Methyl salicylate
.....	3-Methylacroleine, inhibited
.....	2-Methylbutyraldehyde.
.....	Methylchlorobenzenes
.....	Methylnaphthalenes, liquid
.....	Methylnaphthalenes, solid
.....	Methylnitrophenols
.....	3-Methylpyradine
.....	alpha-Methylstyrene
.....	Methylstyrenes, inhibited
.....	Methyltrithion
.....	Methylvinylbenzenes, inhibited
PP	Mevinphos
.....	Mexacarbate
.....	Mirex
.....	Monocrotophos
.....	Motor fuel anti-knock mixtures
.....	Motor fuel anti-knock mixtures or compounds
.....	Nabam
.....	Naled
.....	Naphthalene, crude *or* refined
.....	Naphthalene, molten
.....	Naphthenic acids, liquid
.....	Naphthenic acids, solid
PP	Nickel carbonyl
PP	Nickel cyanide
PP	Nickel tetracarbonyl
.....	3-Nitro-4-chlorobenzotrifluoride
.....	Nitrobenzene.
.....	Nitrobenzotrifluorides
.....	Nitrocresols
.....	Nitrotolueunes (o-: m:- p-)
.....	Nitroxyluenes, (o-; m-; p-)
.....	1-Nonanal.
.....	1-Nonanol.
.....	Nonylphenol
.....	*normal*-Octaldehyde.
.....	1-Octanol.
.....	Oleylamine
PP	Organotin compounds, liquid, n.o.s.
PP	Organotin compounds (pesticides)
PP	Organotin compounds, solid, n.o.s.
PP	Organotin pesticides, liquid, flammable, toxic, n.o.s., *flash point less than 23deg C*
PP	Organotin pesticides, liquid, toxic, flammable, n.o.s.
PP	Organotin pesticides, liquid, toxic, n.o.s.
PP	Organotin pesticides, solid, toxic, n.o.s.
.....	Orthoarsenic acid
.....	Osmium tetroxide
.....	Oxamyl
.....	Oxydisulfoton
.....	Paraoxon
PP	Parathion
PP	Parathion-methyl
PP	PCBs***
.....	Pentachloroethane
PP	Pentachlorophenol
.....	Pentalin
.....	Pentanethiols
.....	n-Pentylbenzene
.....	Perchloroethylene

APPENDIX B TO § 172.101 List of Marine Pollutants—Continued

S.M.P.	Marine Pollutant
(1)	(2)
.....	Perchloromethylmercaptan
.....	Petrol, leaded
PP	Phenarsazine chloride
.....	d-Phenothrin
PP	Phenthoate
.....	1-Phenylbutane
.....	2-Phenylbutane
.....	Phenylcyclohexane.
.....	Phenylethylene, inhibited
PP	Phenylmercuric acetate
PP	Phenylmercuric compounds, n.o.s.
PP	Phenylmercuric hydroxide
PP	Phenylmercuric nitrate
.....	2-Phenylpropene
PP	Phorate
PP	Phosalone
.....	Phosmet
PP	Phosphamidon
PP	Phosphorus, white *or* yellow dry *or* under water *or* in solution
PP	Phosphorus white, or yellow, molten
.....	Pindone (and salts of)
.....	alpha-Pinene
.....	Pirimicarb
PP	Pirimiphos-ethyl
PP	Polychlorinated biphenyls
PP	Polyhalogenated biphenyls, liquid *or* Terphenyls liquid
PP	Polyhalogenated biphenyls, solid *or* Terphenyls, solid
PP	Potassium cuprocyanide
.....	Potassium cyanide
PP	Potassium cyanocuprate I
PP	Potassium cyanomercurate
PP	Potassium mercuric iodide
.....	Promecarb
.....	Propachlor
.....	Propanethiols
.....	Propaphos
.....	Propenal, inhibited
.....	Propionaldehyde.
.....	Propoxur
.....	n-Propylbenzene
.....	Prothoate
.....	Prussic acid, anhydrous, stabilized
.....	Prussic acid, anhydrous, stabilized, absorbed in a porous inert material
PP	Pyrazophos
.....	Quinalphos
PP	Quizalofop
PP	Quizalofop-p-ethyl
.....	Rotenone
.....	Salithion
.....	Silver arsenite
.....	Silver cyanide
PP	Silver orthoarsenite
PP	Sodium copper cyanide, solid
PP	Sodium copper cyanide solution
PP	Sodium cuprocyanide, solid
PP	Sodium cuprocyanide, solution
.....	Sodium cyanide
.....	Sodium dinitro-o-cresolate, *dry or wetted with less than 15 per cent water, by mass*
.....	Sodium dinitro-ortho-cresolate, wetted *with not less than 15 per cent water, by mass*
PP	Sodium pentachlorophenate
.....	Strychnine *or* Strychnine salts
.....	Styrene monomer, inhibited
.....	Sulfotep
PP	Sulprophos

APPENDIX B TO §172.101 List of Marine Pollutants—Continued

S.M.P.	Marine Pollutant
(1)	(2)
.....	Sym-Dichloroethyl ether
.....	Tallow nitrile.
.....	Temephos
.....	TEPP
PP	Terbufos
.....	Tetrabromoethane.
.....	Tetrabromomethane
.....	Tetrachloroethane
.....	Tetrachloroethylene.
.....	Tetrachloromethane
.....	Tetrachlorophenol
PP	Tetrachlorvinphos
.....	Tetraethyl dithiopyrophosphate
PP	Tetraethyl lead, liquid
.....	Tetramethrin
.....	Tetramethylbenzenes
.....	Tetramethyllead
.....	Thallium chlorate
.....	Thallium compounds, n.o.s.
.....	Thallium compounds (pesticides)
.....	Thallium nitrate
.....	Thallium sulfate
.....	Thallous chlorate
.....	4-Thiapentanal.
.....	Thiocarbonyl tetrachloride
.....	Triaryl phosphates, isopropylated
PP	Triaryl phosphates, n.o.s.
.....	Triazophos
.....	Tribromomethane
PP	Tributyltin compounds
.....	Trichlorfon
.....	Trichlorobenzenes, liquid
.....	Trichlorobutene
.....	Trichlorobutylene
.....	Trichloromethane sulphuryl chloride
.....	Trichloromethyl sulphochloride
.....	Trichloronat
.....	Tricresyl phosphate (less than 1% ortho-isomer)
PP	Tricresyl phosphate (not less than 1% ortho-isomer)
PP	Tricresyl phosphate *with more than 3 per cent ortho isomer*
.....	Triethylbenzene
.....	Triisopropylated phenyl phosphates
.....	1,2,3-Trimethylbenzene
.....	1,2,4-Trimethylbenzene
.....	1,3,5-Trimethylbenzene
.....	Trimethylene dichloride
.....	Triphenylphosphate.
PP	Triphenyltin compounds
.....	Tritolyl phosphate (less than 1% ortho-isomer)
PP	Tritolyl phosphate (not less than 1% ortho-isomer)
.....	Trixylenyl phosphate
.....	Turpentine
.....	1-Undecanol.
.....	*normal*-Valeraldehyde.
.....	Vinylbenzene, inhibited
.....	Vinylidene chloride, inhibited
.....	Vinyltoluenes, inhibited *mixed isomers*
.....	Warfarin (and salts of)
PP	White phosphorus, dry
PP	White phosphorus, molten
PP	White phosphorus, wet
.....	White spirit, low (15-20%) aromatic
.....	Xylenols
PP	Yellow phosphorus, dry
PP	Yellow phosphorus, molten

APPENDIX B TO §172.101 List of Marine Pollutants—Continued

S.M.P.	Marine Pollutant
(1)	(2)
PP	Yellow phosphorus, wet
.....	Zinc bromide
.....	Zinc cyanide

[Amdt. 172–127, 57 FR 52935, Nov. 5, 1992]

EDITORIAL NOTE: For FEDERAL REGISTER citations affecting Appendix B to §172.102, see the List of CFR Sections Affected in the Finding Aids section of this volume.

§172.102 Special provisions.

(a) *General.* When Column 7 of the §172.101 Table refers to a special provision for a hazardous material, the meaning and requirements of that provision are as set forth in this section. When a special provision specifies packaging or packaging requirements—

(1) The special provision is in addition to the standard requirements for all packagings prescribed in §173.24 of this subchapter and any other applicable packaging requirements in subparts A and B of part 173 of this subchapter; and

(2) To the extent a special provision imposes limitations or additional requirements on the packaging provisions set forth in Column 8 of the §172.101 Table, packagings must conform to the requirements of the special provision.

(b) *Description of codes for special provisions.* Special provisions contain packaging provisions, prohibitions, exceptions from requirements for particular quantities or forms of materials and requirements or prohibitions applicable to specific modes of transportation, as follows:

(1) A code consisting only of numbers (for example, ''11'') is multi-modal in application and may apply to bulk and non-bulk packagings.

(2) A code containing the letter ''A'' refers to a special provision which applies only to transportation by aircraft.

(3) A code containing the letter ''B'' refers to a special provision which applies only to bulk packaging requirements. Unless otherwise provided in

this subchapter, these special provisions do not apply to IM portable tanks.

(4) A code containing the letter ''H'' refers to a special provision which applies only to transportation by highway.

(5) A code containing the letter ''N'' refers to a special provision which applies only to non-bulk packaging requirements.

(6) A code containing the letter ''R'' refers to a special provision which applies only to transportation by rail.

(7) A code containing the letter ''T'' refers to a special provision which applies only to transportation in IM portable tanks.

(8) A code containing the letter ''W'' refers to a special provision which applies only to transportation by water.

(c) *Tables of special provisions.* The following tables list, and set forth the requirements of, the special provisions referred to in Column 7 of the § 172.101 Table.

(1) *Numeric provisions.* These provisions are multi-modal and apply to bulk and non-bulk packagings:

Code/Special Provisions

1 This material is poisonous by inhalation (see § 171.8 of this subchapter) in Hazard Zone A (see § 173.116(a) or § 173.133(a) of this subchapter), and must be described as an inhalation hazard under the provisions of this subchapter.

2 This material is poisonous by inhalation (see § 171.8 of this subchapter) in Hazard Zone B (see § 173.116(a) or § 173.133(a) of this subchapter), and must be described as an inhalation hazard under the provisions of this subchapter.

3 This material is poisonous by inhalation (see § 171.8 of this subchapter) in Hazard Zone C (see § 173.116(a) of this subchapter), and must be described as an inhalation hazard under the provisions of this subchapter.

4 This material is poisonous by inhalation (see § 171.8 of this subchapter) in Hazard Zone D (see § 173.116(a) of this subchapter), and must be described as an inhalation hazard under the provisions of this subchapter.

5 If this material meets the definition for a material poisonous by inhalation (see § 171.8 of this subchapter), a shipping name must be selected which identifies the inhalation hazard, in Division 2.3 or Division 6.1, as appropriate.

6 This material is poisonous-by-inhalation and must be described as an inhalation hazard under the provisions of this subchapter.

7 An ammonium nitrate fertilizer is a fertilizer formulation, containing 90% or more ammonium nitrate and no more than 0.2% organic combustible material (calculated as carbon), which does not meet the definition and criteria of a Class 1 (explosive) material (See § 173.50 of this subchapter).

8 A hazardous substance that is not a hazardous waste may be shipped under the shipping description ''Other regulated substances, liquid *or* solid, n.o.s.'', as appropriate. In addition, for solid materials, special provision B54 applies.

9 Packaging for certain PCBs for disposal and storage is prescribed by EPA in 40 CFR 761.60 and 761.65.

10 An ammonium nitrate mixed fertilizer is a fertilizer formulation, containing less than 90% ammonium nitrate and other ingredients, which does not meet the definition and criteria of a Class 1 (explosive) material (See § 173.50 of this subchapter).

11 The hazardous material must be packaged as either a liquid or a solid, as appropriate, depending on its physical form at 55 °C (131 °F) at atmospheric pressure.

12 In concentrations greater than 40 percent, this material has strong oxidizing properties and is capable of starting fires in contact with combustible materials. If appropriate, a package containing this material must conform to the additional labeling requirements of § 172.402 of this subchapter.

13 The words ''Inhalation Hazard'' shall be entered on each shipping paper in association with the shipping description, shall be marked on each non-bulk package in association with the proper shipping name and identification number, and shall be marked on two opposing sides of each bulk package. Size of marking on bulk package must conform to § 172.302(b) of this subchapter. The requirements of §§ 172.203(m) and 172.505 of this subchapter do not apply.

14 Motor fuel antiknock mixtures are:

a. Mixtures of one or more organic lead mixtures (such as tetraethyl lead, triethylmethyl lead, diethyldimethyl lead, ethyltrimethyl lead, and tetramethyl lead) with one or more halogen compounds (such as ethylene dibromide and ethylene dichloride), hydrocarbon solvents or other equally efficient stabilizers; or

b. tetraethyl lead.

15 Chemical kits and first aid kits are boxes, cases, etc., containing small amounts of various compatible dangerous goods which are used for medical, analytical, or testing purposes and for which exceptions are provided in this subchapter.

For transportation by aircraft, any hazardous materials forbidden in passenger aircraft may not be included in these kits. Inner packagings may not exceed 250 mL for liquids or 250 g for solids and must be protected from other materials in the kit. The total quantity of hazardous materials in any one kit may not exceed either 1 L or 1 kg. The packing group assigned to the kit as a whole must be the most stringent packing group assigned to any individual substance contained in the kit. Kits must be packed in wooden boxes (4C1, 4C2), plywood boxes (4D), reconstituted wood boxes (4F), fiberboard boxes (4G) or plastic boxes (4H1, 4H2); these packagings must meet the requirements appropriate to the packing group assigned to the kit as a whole. The total quantity of hazardous materials in any one package may not exceed either 10 L or 10 kg. Kits which are carried on board transport vehicles for first-aid or operating purposes are not subject to the requirements of this subchapter.

16 This description applies to smokeless powder and other solid propellants that are used as powder for small arms and have been classed as Division 1.3 and 4.1 in accordance with §173.56 of this subchapter.

17 Aqueous solutions of hydrogen peroxide containing less than 8 percent hydrogen peroxide are not subject to the requirements of this subchapter.

18 This description is authorized only for fire extinguishers listed in §173.309(b) of this subchapter meeting the following conditions:

a. Each fire extinguisher may only have extinguishing contents that are nonflammable, non-poisonous, non-corrosive and commercially free from corroding components.

b. Each fire extinguisher must be charged with a nonflammable, non- poisonous, dry gas that has a dew-point at or below minus 46.7 °C (minus 52 °F) at 101kPa (1 atmosphere) and is free of corroding components, to not more than the service pressure of the cylinder.

c. A fire extinguisher may not contain more than 30% carbon dioxide by volume or any other corrosive extinguishing agent.

d. Each fire extinguisher must be protected externally by suitable corrosion-resisting coating.

19 For domestic transportation only, the identification number ''UN1075'' may be used in place of the identification number specified in Column (4) of the §172.101 Table. The identification number used must be consistent on package markings, shipping papers and emergency response information.

20 The transport of this substance, when in concentrations of greater than 10% nitroglycerin, is prohibited. Concentrations of below 5% nitroglycerin may be transported as a Class 3 material; see UN 1204 and UN 3064.

21 This material must be stabilized by appropriate means (e.g., addition of chemical inhibitor, purging to remove oxygen) to prevent dangerous polymerization (see §173.21(f) of this subchapter).

22 If the hazardous material is in dispersion in organic liquid, the organic liquid must have a flash point above 50 °C (122 °F).

23 This material may be transported under the provisions of Division 4.1 only if it is so packed that the percentage of diluent will not fall below that stated in the shipping description at any time during transport. Quantities of not more than 500 g per package with not less than 10 percent water by mass may also be classed in Division 4.1, provided a negative test result is obtained when tested in accordance with test series 6(c) of the UN Manual of Tests and Criteria.

24 Alcoholic beverages containing more than 70 percent alcohol by volume must be transported as materials in Packing Group II. Alcoholic beverages containing more than 24 percent but not more than 70 percent alcohol by volume must be transported as materials in Packing Group III.

25 Until October 1, 1997, this material may be transported or offered for transportation in a packaging authorized under the regulations in effect on September 30, 1996.

26 This entry does not include ammonium permanganate, the transport of which is prohibited except when approved by the Associate Administrator for Hazardous Materials Safety.

27 Sodium carbonate peroxyhydrate is considered non-hazardous.

28 The dihydrated sodium salt of dichloroisocyanuric acid is not subject to the requirements of this subchapter.

29 Lithium cells and batteries and equipment containing or packed with lithium cells and batteries which do not comply with the provisions of §173.185 of this subchapter may be transported only if they are approved by the Associate Administrator for Hazardous Materials Safety.

30 Sulfur is not subject to the requirements of this subchapter if transported in a non-bulk packaging or if formed to a specific shape (*e.g.*, prills, granules, pellets, pastilles, or flakes).

31 Materials which have undergone sufficient heat treatment to render them non–hazardous are not subject to the requirements of this subchapter.

32 Polymeric beads and molding compounds may be made from polystyrene, poly(methyl methacrylate) or other polymeric material.

33 Ammonium nitrites and mixtures of an inorganic nitrite with an ammonium salt are prohibited.

34 The commercial grade of calcium nitrate fertilizer, when consisting mainly of a double salt (calcium nitrate and ammonium nitrate) containing not more than 10 percent ammonium nitrate and at least 12 percent water of crystallization, is not subject to the requirements of this subchapter.

35 Antimony sulphides and oxides which do not contain more than 0.5 percent of arsenic calculated on the total mass do not meet the definition of Division 6.1.

36 The maximum net quantity per package is 5 liters (1 gallon) or 5 kg (11 pounds).

37 Unless it can be demonstrated by testing that the sensitivity of the substance in its frozen state is no greater than in its liquid state, the substance must remain liquid during normal transport conditions. It must not freeze at temperatures above −15°C (5°F).

38 If this material shows a violent effect in laboratory tests involving heating under confinement, the labeling requirements of Special Provision 53 apply, and the material must be packaged in accordance with packing method OP6 in § 173.225 of this subchapter. If the SADT of the technically pure substance is higher than 75 °C, the technically pure substance and formulations derived from it are not self-reactive materials and, if not meeting any other hazard class, are not subject to the requirements of this subchapter.

39 This substance may be carried under provisions other than those of Class 1 only if it is so packed that the percentage of water will not fall below that stated at any time during transport. When phlegmatized with water and inorganic inert material, the content of urea nitrate must not exceed 75 percent by mass and the mixture should not be capable of being detonated by test 1(a)(i) or test 1(a) (ii) in the UN Recommendations Tests and Criteria.

40 Polyester resin kits consist of two components: a base material (Class 3, Packing Group II or III) and an activator (organic peroxide), each separately packed in an inner packaging. The organic peroxide must be type D, E, or F, not requiring temperature control, and be limited to a quantity of 125 ml (4.22 ounces) per inner packaging if liquid, and 500 g (1 pound) if solid. The components may be placed in the same outer packaging provided they will not interact dangerously in the event of leakage. Packing group will be II or III, according to the criteria for Class 3, applied to the base material.

43 The nitrogen content of the nitrocellulose must not exceed 11.5 percent. Each single filter sheet must be packed between sheets of glazed paper. The portion of glazed paper between the filter sheets must not be less than 65 percent, by mass. The membrane filters/paper arrangement must not be liable to propagate a detonation as tested by one of the tests described in the UN Recommendations, Tests and Criteria, Part I, Test series 1 (a). Packagings should be so constructed that explosion is not possible by reason of increased internal pressure.

44 The formulation must be prepared so that it remains homogeneous and does not separate during transport. Formulations with low nitrocellulose contents and neither showing dangerous properties when tested for their ability to detonate, deflagrate or explode when heated under defined confinement by the appropriate test methods and criteria in the UN Recommendations, Tests and Criteria, nor being a flammable solid when tested in accordance with Appendix E to Part 173 of this subchapter (chips, if necessary, crushed and sieved to a particle size of less than 1.25 mm) are not subject to this subchapter.

45 Temperature should be maintained between 18°C (64.4°F) and 40°C (104°F). Tanks containing solidified methacrylic acid must not be reheated during transport.

46 This material must be packed in accordance with packing method OP6 (see § 173.225 of this subchapter). During transport, it must be protected from direct sunshine and stored (or kept) in a cool and well-ventilated place, away from all sources of heat.

47 Mixtures of solids which are not subject to this subchapter and flammable liquids may be transported under this entry without first applying the classification criteria of Division 4.1, provided there is no free liquid visible at the time the material is loaded or at the time the packaging or transport unit is closed. Each packaging must correspond to a design type that has passed a leakproofness test at the Packing Group II level. Small inner packagings consisting of sealed packets containing less than 10 ml of a Class 3 liquid in Packing Group II or III absorbed onto a solid material are not subject to this subchapter provided there is no free liquid in the packet.

48 Mixtures of solids which are not subject to this subchapter and toxic liquids may be transported under this entry without first applying the classification criteria of Division 6.1, provided there is no free liquid visible at the time the material is loaded or at the time the packaging or transport unit is closed. Each packaging must correspond to a design type that has passed a leakproofness test at the Packing Group II level. This entry may not be used for solids containing a Packing Group I liquid.

49 Mixtures of solids which are not subject to this subchapter and corrosive liquids may be transported under this entry without first applying the classification criteria of Class 8, provided there is no free

liquid visible at the time the material is loaded or at the time the packaging or transport unit is closed. Each packaging must correspond to a design type that has passed a leakproofness test at the Packing Group II level.

50 Cases, cartridge, empty with primer which are made of metallic or plastic casings and meeting the classification criteria of Division 1.4 are not regulated for domestic transportation.

51 This description applies to items previously described as ''Toy propellant devices, Class C'' and includes reloadable kits. Model rocket motors containing 30 grams or less propellant are classed as Division 1.4S and items containing more than 30 grams of propellant but not more than 62.5 grams of propellant are classed as Division 1.4C.

52 Ammonium nitrate fertilizers may not meet the definition and criteria of Class 1 (explosive) material (see § 173.50 of this subchapter).

53 Packages of these materials must bear the subsidiary risk label, ''EXPLOSIVE'', unless otherwise provided in this subchapter or through an approval issued by the Associate Administrator for Hazardous Materials Safety, or the competent authority of the country of origin. A copy of the approval shall accompany the shipping papers.

54 Maneb or maneb preparations not meeting the definition of Division 4.3 or any other hazard class are not subject to the requirements of this subchapter when transported by motor vehicle, rail car, or aircraft.

55 This device must be approved in accordance with § 173.56 of this subchapter by the Associate Administrator for Hazardous Materials Safety.

56 A means to interrupt and prevent detonation of the detonator from initiating the detonating cord must be installed between each electric detonator and the detonating cord ends of the jet perforating guns before the charged jet perforating guns are offered for transportation.

57 Maneb *or* Maneb preparations stabilized against self-heating need not be classified in Division 4.2 when it can be demonstrated by testing that a volume of 1 m^3 of substance does not self-ignite and that the temperature at the center of the sample does not exceed 200 °C, when the sample is maintained at a temperature of not less than 75 °C # 2 °C for a period of 24 hours, in accordance with procedures set forth for testing self-heating materials in the UN Manual of Tests and Criteria.

58 Aqueous solutions of Division 5.1 inorganic solid nitrate substances are considered as not meeting the criteria of Division 5.1 if the concentration of the substances in solution at the minimum temperature encountered in transport is not greater than 80% of the saturation limit.

59 Ferrocerium, stabilized against corrosion, with a minimum iron content of 10 percent is not subject to the requirements of this subchapter.

60 After September 30, 1997, an oxygen generator, chemical, that is shipped with its means of initiation attached must incorporate at least two positive means of preventing unintentional actuation of the generator, and be classed and approved by the Associate Administrator for Hazardous Materials Safety. The procedures for approval of a chemical oxygen generator that contains an explosive means of initiation (e.g., a primer or electric match) are specified in § 173.56 of this subchapter. Each person who offers a chemical oxygen generator for transportation after September 30, 1997, shall: (1) ensure that it is offered in conformance with the conditions of the approval; (2) maintain a copy of the approval at each facility where the chemical oxygen generator is packaged; and (3) mark the approval number on the outside of the package.

64 The group of alkali metals includes lithium, sodium, potassium, rubidium, and caesium.

65 The group of alkaline earth metals includes magnesium, calcium, strontium, and barium.

66 Formulations of these substances containing not less than 30 percent non-volatile, non-flammable phlegmatizer are not subject to this subchapter.

70 Black powder that has been classed in accordance with the requirements of § 173.56 of this subchapter may be reclassed and offered for domestic transportation as a Division 4.1 material if it is offered for transportation and transported in accordance with the limitations and packaging requirements of § 173.170 of this subchapter.

74 During transport, this material must be protected from direct sunshine and stored or kept in a cool and well-ventilated place, away from all sources of heat.

77 For domestic transportation, a Division 5.1 subsidiary risk label is required only if a carbon dioxide and oxygen mixture contains more than 23.5% oxygen.

81 Polychlorinated biphenyl items, as defined in 40 CFR 761.3, for which specification packagings are impractical, may be packaged in non-specification packagings meeting the general packaging requirements of subparts A and B of part 173 of this subchapter. Alternatively, the item itself may be used as a packaging if it meets the general packaging requirements of subparts A and B of part 173 of this subchapter.

101 The name of the particular substance or article must be specified.

102 The ends of the detonating cord must be tied fast so that the explosive cannot escape.The articles may be transported as in Division 1.4 Compatibility Group D (1.4D) if all of the conditions specified in § 173.63(a) of this subchapter are met.

103 Detonators which will not mass detonate and undergo only limited propagation in the shipping package may be assigned to 1.4B classification code. Mass detonate means that more than 90 percent of the devices tested in a package explode practically simultaneously. Limited propagation means that if one detonator near the center of a shipping package is exploded, the aggregate weight of explosives, excluding ignition and delay charges, in this and all additional detonators in the outside packaging that explode may not exceed 25 grams.

104 Detonators which meet the following conditions may be assigned to 1.4S classification code: Each detonator may contain no more than 1 g of explosive, excluding ignition and delay charges, and if one detonator near the center of a package detonates it will not cause functioning of any other device in the same or adjacent packages.

105 The word ''Agents'' may be used instead of ''Explosives'' when approved by the Associate Administrator for Hazardous Materials Safety.

106 The recognized name of the particular explosive may be specified in addition to the type.

107 The classification of the substance is expected to vary especially with the particle size and packaging but the border lines have not been experimentally determined; appropriate classifications should be verified following the test procedures in §§ 173.57 and 173.58 of this subchapter.

108 Fireworks must be so constructed and packaged that loose pyrotechnic composition will not be present in packages during transportation.

109 Rocket motors must be nonpropulsive in transportation unless approved in accordance with § 173.56 of this subchapter. A rocket motor to be considered ''nonpropulsive'' must be capable of unrestrained burning and must not appreciably move in any direction when ignited by any means.

110 Cartridges containing 3.2 grams or less of deflagrating (propellant) explosives installed in a fire extinguisher are not subject to the requirements of this subchapter.

111 Explosive substances of Division 1.1 Compatibility Group A (1.1A) are forbidden for transportation if dry or not desensitized, unless incorporated in a device.

113 The sample must be given a tentative approval by an agency or laboratory in accordance with § 173.56 of this subchapter.

114 Jet perforating guns, charged, oil well, without detonator may be reclassed to Division 1.4 Compatibility Group D (1.4D) if the following conditions are met:

a. The total weight of the explosive contents of the shaped charges assembled in the guns does not exceed 90.5 kg (200 pounds) per vehicle; and

b. The guns are packaged in accordance with Packing Method US006 as specified in § 173.62 of this subchapter.

115 Boosters with detonator, detonator assemblies and boosters with detonators in which the total explosive charge per unit does not exceed 25 g, and which will not mass detonate and undergo only limited propagation in the shipping package may be assigned to 1.4B classification code. Mass detonate means more than 90 percent of the devices tested in a package explode practically simultaneously. Limited propagation means that if one booster near the center of the package is exploded, the aggregate weight of explosives, excluding ignition and delay charges, in this and all additional boosters in the outside packaging that explode may not exceed 25 g.

116 Fuzes, detonating may be classed in Division 1.4 if the fuzes do not contain more than 25 g of explosive per fuze and are made and packaged so that they will not cause functioning of other fuzes, explosives or other explosive devices if one of the fuzes detonates in a shipping packaging or in adjacent packages.

117 If shipment of the explosive substance is to take place at a time that freezing weather is anticipated, the water contained in the explosive substance must be mixed with denatured alcohol so that freezing will not occur.

118 This substance may not be transported under the provisions of Division 4.1 unless specifically authorized by the Associate Administrator for Hazardous Materials Safety.

119 This substance, when in quantities of not more than 11.5 kg (25.3 pounds), with not less than 10 percent water, by mass, also may be classed in Division 4.1, provided a negative test result is obtained when tested in accordance with test series 6(c) of the UN Manual of Tests and Criteria.

120 The phlegmatized substance must be significantly less sensitive than dry PETN.

121 This substance, when containing less alcohol, water or phlegmatizer than specified, may not be transported unless approved by the Associate Administrator for Hazardous Materials Safety.

123 Any explosives, blasting, type C containing chlorates must be segregated from explosives containing ammonium nitrate or other ammonium salts.

125 Lactose or glucose or similar materials may be used as a phlegmatizer provided

that the substance contains not less than 90%, by mass, of phlegmatizer. These mixtures may be classified in Division 4.1 when tested in accordance with test series 6(c) of the UN Manual of Tests and Criteria and approved by the Associate Administrator for Hazardous Materials Safety. Testing must be conducted on at least three packages as prepared for transport. Mixtures containing at least 90%, by mass, of phlegmatizer are not subject to the requirements of this subchapter. Packages containing mixtures with not less than 98% by mass, of phlegmatizer need not bear a POISON subsidiary risk label.

127 Mixtures containing oxidizing and organic materials transported under this entry may not meet the definition and criteria of a Class 1 material. (See § 173.50 of this subchapter.)

128 Notwithstanding the provisions of § 172.101(c)(12), an aluminum smelting by-product or aluminum remelting by-product described under this entry, in Packing Group II or III, may be packaged in accordance with Special Provision B115 of this section.

(2) *''A'' codes.* These provisions apply only to transportation by aircraft:

Code/Special Provisions

A1 Single packagings are not permitted on passenger aircraft.

A2 Single packagings are not permitted on aircraft.

A3 For combination packagings, if glass inner packagings (including ampoules) are used, they must be packed with absorbent material in tightly closed metal receptacles before packing in outer packagings.

A4 Liquids having an inhalation toxicity of Packing Group I are not permitted on aircraft.

A5 Solids having an inhalation toxicity of Packing Group I are not permitted on passenger aircraft and may not exceed a maximum net quantity per package of 15 kg (33 pounds) on cargo aircraft.

A6 For combination packagings, if plastic inner packagings are used, they must be packed in tightly closed metal receptacles before packing in outer packagings.

A7 Steel packagings must be corrosion-resistant or have protection against corrosion.

A8 For combination packagings, if glass inner packagings (including ampoules) are used, they must be packed with cushioning material in tightly closed metal receptacles before packing in outer packagings.

A9 For combination packagings, if plastic bags are used, they must be packed in tightly closed metal receptacles before packing in outer packagings.

A10 When aluminum or aluminum alloy construction materials are used, they must be resistant to corrosion.

A11 For combination packagings, when metal inner packagings are permitted, only specification cylinders constructed of metals which are compatible with the hazardous material may be used.

A13 Non-bulk packagings conforming to § 173.197 of this subchapter not exceeding 16 kilograms (35 pounds) gross mass containing only used sharps are permitted for transportation by aircraft. Maximum liquid content in each inner packaging may not exceed 50 milliliters (1.7 ounces).

A14 Non-bulk packagings of regulated medical waste conforming to § 173.197 of this subchapter not exceeding 16 kilograms (35 pounds) gross mass for solid waste or 12 liters (3 gallons) total volume for liquid waste may be transported by passenger and cargo aircraft when means of transportation other than air are impracticable or not available.

A19 Combination packagings consisting of outer fiber drums or plywood drums, with inner plastic packagings, are not authorized for transportation by aircraft.

A20 Plastic bags as inner receptacles of combination packagings are not authorized for transportation by aircraft.

A29 Combination packagings consisting of outer expanded plastic boxes with inner plastic bags are not authorized for transportation by aircraft.

A30 Ammonium permanganate is not authorized for transportation on aircraft.

A34 Aerosols containing a corrosive liquid in Packing Group II charged with a gas are not permitted for transportation by aircraft.

A51 When transported by cargo-only aircraft, an oxygen generator must conform to the provisions of an approval issued under Special Provision 60 and be contained in a packaging prepared and originally offered for transportation by the approval holder.

(3) *''B'' codes.* These provisions apply only to bulk packagings:

Code/Special Provisions

B1 If the material has a flash point at or above 38 °C (100 °F) and below 93 °C (200 °F), then the bulk packaging requirements of § 173.241 of this subchapter are applicable. If the material has a flash point of less than 38 °C (100 °F), then the bulk packaging requirements of § 173.242 of this subchapter are applicable.

B2 MC 300, MC 301, MC 302, MC 303, MC 305, and MC 306 and DOT 406 cargo tanks are not authorized.

B3 MC 300, MC 301, MC 302, MC 303, MC 305, and MC 306 and DOT 406 cargo tanks and DOT 57 portable tanks are not authorized.

B4 MC 300, MC 301, MC 302, MC 303, MC 305, and MC 306 and DOT 406 cargo tanks are not authorized.

B5 Only ammonium nitrate solutions with 35 percent or less water that will remain completely in solution under all conditions of transport at a maximum lading temperature of 116°C (240°F) are authorized for transport in the following bulk packagings: MC 307, MC 312, DOT 407 and DOT 412 cargo tanks with at least 172 kPa (25 psig) design pressure. The packaging shall be designed for a working temperature of at least 121°C (250°F). Only Specifications MC 304, MC 307 or DOT 407 cargo tank motor vehicles are authorized for transportation by vessel.

B6 Packagings shall be made of steel.

B7 Safety relief devices are not authorized on multi-unit tank car tanks. Openings for safety relief devices shall be plugged or blank flanged.

B8 Packagings shall be made of nickel, stainless steel, or steel with nickel, stainless steel, lead or other suitable corrosion resistant metallic lining.

B9 Bottom outlets are not authorized.

B10 MC 300, MC 301, MC 302, MC 303, MC 305, and MC 306 and DOT 406 cargo tanks, and DOT 57 portable tanks are not authorized.

B11 Tank car tanks must have a test pressure of at least 2,068.5 kPa (300 psi). Cargo and portable tanks must have a design pressure of at least 1,207 kPa (175 psig).

B13 A nonspecification cargo tank motor vehicle authorized in § 173.247 of this subchapter must be at least equivalent in design and in construction to a DOT 406 cargo tank or MC 306 cargo tank (if constructed before August 31, 1995), except as follows:

a. Packagings equivalent to MC 306 cargo tanks are excepted from §§ 178.340–10, certification; 178.341–4, vents; and 178.341–5, emergency flow control.

b. Packagings equivalent to DOT 406 cargo tanks are excepted from §§ 178.345–7(d)(5), circumferential reinforcements; 178.345–14, marking; 178.345–15, certification; 178.346–10, pressure relief; and 178.346–11, outlets.

c. Packagings are excepted from the design stress limits at elevated temperatures, as described in the ASME Code. However, the design stress limits may not exceed 25 percent of the stress, as specified in the Aluminum Association's ''Aluminum Standards and Data'' (7th Edition June 1982), for 0 temper at the maximum design temperature of the cargo tank.

B14 Each bulk packaging, except a tank car or a multi-unit-tank car tank, must be insulated with an insulating material so that the overall thermal conductance at 15.5° C (60° F) is no more than 1.5333 kilojoules per hour per square meter per degree Celsius (0.075 Btu per hour per square foot per degree Fahrenheit) temperature differential. Insulating materials must not promote corrosion to steel when wet. Notwithstanding the requirements in § 171.14(b)(4)(ii) of this subchapter, compliance with this provision is delayed until October 1, 1994, for a bulk packaging containing a material poisonous by inhalation which, when in contact with moisture, becomes highly corrosive to the tank and could cause a degree of corrosion under an insulation blanket that would have an adverse effect on tank integrity.

B15 Packagings must be protected with non-metallic linings impervious to the lading or have a suitable corrosion allowance.

B16 The lading must be completely covered with nitrogen, inert gas or other inert materials.

B18 Open steel hoppers or bins are authorized.

B23 Tanks must be made of steel that is rubber lined or unlined. Unlined tanks must be passivated before being placed in service. If unlined tanks are washed out with water, they must be repassivated prior to return to service. Lading in unlined tanks must be inhibited so that the corrosive effect on steel is not greater than that of hydrofluoric acid of 65 percent concentration.

B25 Packagings must be made from monel or nickel or monel-lined or nickel-lined steel.

B26 Tanks must be insulated. Insulation must be at least 100 mm (3.9 inches) except that the insulation thickness may be reduced to 51 mm (2 inches) over the exterior heater coils. Interior heating coils are not authorized. The packaging may not be loaded with a material outside of the packaging's design temperature range. In addition, the material also must be covered with an inert gas or the container must be filled with water to the tank's capacity. After unloading, the residual material also must be covered with an inert gas or the container must be filled with water to the tank's capacity.

B27 Tanks must have a service pressure of 1,034 kPa (150 psig). Tank car tanks must have a test pressure rating of 1,379 kPa (200 psi). Lading must be blanketed at all times with a dry inert gas at a pressure not to exceed 103 kPa (15 psig).

B28 Packagings must be made of stainless steel.

B30 MC 312, MC 330, MC 331 and DOT 412 cargo tanks and DOT 51 portable tanks must be made of stainless steel, except that steel other than stainless steel may be used in accordance with the provisions of § 173.24b(b) of this subchapter. Thickness of stainless steel for tank shell and heads for cargo tanks and portable tanks must be the greater of 7.62 mm (0.300 inch) or the thickness required for a tank with a design pressure at least equal to 1.5 times the

vapor pressure of the lading at 46°C (115° F). In addition, MC 312 and DOT 412 cargo tank motor vehicles must:

a. Be ASME Code (U) stamped for 100% radiography of all pressure-retaining welds;

b. Have accident damage protection which conforms with § 178.345–8 of this subchapter;

c. Have a MAWP or design pressure of at least 87 psig: and

d. Have a bolted manway cover.

B32 MC 312, MC 330, MC 331, DOT 412 cargo tanks and DOT 51 portable tanks must be made of stainless steel, except that steel other than stainless steel may be used in accordance with the provisions of § 173.24b(b) of this subchapter. Thickness of stainless steel for tank shell and heads for cargo tanks and portable tanks must be the greater of 6.35 mm (0.250 inch) or the thickness required for a tank with a design pressure at least equal to 1.3 times the vapor pressure of the lading at 46°C (115° F). In addition, MC 312 and DOT 412 cargo tank motor vehicles must:

a. Be ASME Code (U) stamped for 100% radiography of all pressure-retaining welds;

b. Have accident damage protection which conforms with § 178.345–8 of this subchapter;

c. Have a MAWP or design pressure of at least 87 psig; and

d. Have a bolted manway cover.

B33 MC 300, MC 301, MC 302, MC 303, MC 305, MC 306, and DOT 406 cargo tanks equipped with a 1 psig normal vent used to transport gasoline must conform to Table 1 of this Special Provision. Based on the volatility class determined by using ASTM D439 and the Reid vapor pressure (RVP) of the particular gasoline, the maximum lading pressure and maximum ambient temperature permitted during the loading of gasoline may not exceed that listed in Table I.

TABLE I—MAXIMUM AMBIENT TEMPERATURE—GASOLINE

ASTM D439 volatility class	Maximum lading and ambient temperature (see note 1)
A (RVP<=9.0 psia)	131° F
B (RVP<=10.0 psia)	124° F
C (RVP<=11.5 psia)	116° F
D (RVP<=13.5 psia)	107° F
E (RVP<=15.0 psia)	100° F

AANote 1: Based on maximum lading pressure of 1 psig at top of cargo tank.

B35 Tank cars containing hydrogen cyanide may be alternatively marked ''Hydrocyanic acid, liquefied'' if otherwise conforming to marking requirements in subpart D of this part. Tank cars marked ''HYDROCYANIC ACID'' prior to October 1, 1991 do not need to be remarked.

B37 The amount of nitric oxide charged into any tank car tank may not exceed 1,379 kPa (200 psig) at 21° C (70° F).

B42 Tank cars must have a test pressure of 34.47 Bar (500 psig) or greater and conform to Class 105J. Each tank car must have a safety relief device having a start-to-discharge pressure of 10.34 Bar (150 psig). The tank car specification may be marked to indicate a test pressure of 13.79 Bar (200 psig).

B44 All parts of valves and safety relief devices in contact with lading must be of a material which will not cause formation of acetylides.

B45 Safety relief valves must be equipped with stainless steel or platinum frangible discs approved by the AAR Committee on Tank Cars.

B46 The detachable protective housing for the loading and unloading valves of multi-unit tank car tanks must withstand tank test pressure and must be approved by the Associate Administrator for Hazardous Materials Safety.

B47 A safety relief device with a start-to-discharge pressure setting of 310 kPa (45 psig) is permitted.

B48 Portable tanks in sodium metal service may be visually inspected at least once every 5 years instead of being retested hydrostatically. Date of the visual inspection must be stenciled on the tank near the other required markings.

B49 Tanks equipped with interior heater coils are not authorized. Single unit tank car tanks must have a safety relief valve set at no more than 1551 kPa (225 psig).

B50 Each valve outlet of a multi-unit tank car tank must be sealed by a threaded solid plug or a threaded cap with inert luting or gasket material. Valves must be of stainless steel and the caps, plugs, and valve seats must be of a material that will not deteriorate as a result of contact with the lading.

B52 Notwithstanding the provisions of § 173.24b of this subchapter, non-reclosing pressure relief devices are authorized on DOT 57 portable tanks.

B53 Except for IBCs, packagings must be made of either aluminum or steel.

B54 Open-top, sift-proof rail cars are also authorized.

B55 Water-tight, sift-proof, closed-top, metal-covered hopper cars, equipped with a venting arrangement (including flame arrestors) approved by the Associate Administrator for Hazardous Materials Safety are also authorized.

B56 Water-tight, sift-proof, closed-top, metal-covered hopper cars are also authorized if the particle size of the hazardous material is not less than 149 microns.

B57 Class 115A tank car tanks used to transport chloroprene must be equipped with a safety vent of a diameter not less than 305 mm (12 inches) with a maximum rupture disc pressure of 45 psi.

B59 Water-tight, sift-proof, closed-top, metal-covered hopper cars are also authorized provided that the lading is covered with a nitrogen blanket.

B60 DOT Specification 106A500X multi-unit tank car tanks that are not equipped with a safety relief device of any type are authorized. For the transportation of phosgene, the outage must be sufficient to prevent tanks from becoming liquid full at 55 °C (130 °F).

B61 Written procedures covering details of tank car appurtenances, dome fittings, safety devices, and marking, loading, handling, inspection, and testing practices must be approved by the Associate Administrator for Hazardous Materials Safety before any single unit tank car tank is offered for transportation.

B64 Each single unit tank car tank built after December 31, 1990 must be equipped with a tank head puncture resistance system that conforms to § 179.16 of this subchapter.

B65 Tank cars must have a test pressure of 34.47 Bar (500 psig) or greater and conform to Class 105A. Each tank car must have a pressure relief device having a start-to-discharge pressure of 15.51 Bar (225 psig). The tank car specification may be marked to indicate a test pressure of 20.68 Bar (300 psig).

B66 Each tank must be equipped with gas tight valve protection caps. Outage must be sufficient to prevent tanks from becoming liquid full at 55°C (130°F). Specification 110A500W tanks must be stainless steel.

B67 All valves and fittings must be protected by a securely attached cover made of metal not subject to deterioration by the lading, and all valve openings, except safety valve, must be fitted with screw plugs or caps to prevent leakage in the event of valve failure.

B68 Sodium must be in a molten condition when loaded and allowed to solidify before shipment. Outage must be at least 5 percent at 98°C (208°F). Bulk packagings must have exterior heating coils fusion welded to the tank shell which have been properly stress relieved. The only tank car tanks authorized are Class DOT 105 tank cars having a test pressure of 2,069 kPa (300 psig) or greater.

B69 Dry sodium cyanide or potassium cyanide may be shipped in sift-proof weather-resistant metal covered hopper cars, covered motor vehicles, portable tanks or non-specification bins. Bins must be approved by the Associate Administrator for Hazardous Materials Safety. Flexible intermediate bulk containers (FIBCs) may also be used under conditions approved by the Associate Administrator for Hazardous Materials Safety.

B70 If DOT 103ANW tank car tank is used: All cast metal in contact with the lading must have 96.7 percent nickel content; and the lading must be anhydrous and free from any impurities.

B71 Tank cars must have a test pressure of 20.68 Bar (300 psig) or greater and conform to Class 105, 112, 114 or 120.

B72 Tank cars must have a test pressure of 34.47 Bar (500 psig) or greater and conform to Class 105J, 106, or 110.

B74 Tank cars must have a test pressure of 20.68 Bar (300 psig) or greater and conform to Class 105S, 106, 110, 112J, 114J or 120S.

B76 Tank cars must have a test pressure of 20.68 Bar (300 psig) or greater and conform to Class 105S, 112J, 114J or 120S. Each tank car must have a safety relief device having a start-to-discharge pressure of 10.34 Bar (150 psig). The tank car specification may be marked to indicate a test pressure of 13.79 Bar (200 psig).

B77 Other packaging are authorized when approved by the Associate Administrator for Hazardous Materials Safety.

B78 Tank cars must have a test pressure of 4.14 Bar (60 psig) or greater and conform to Class 103, 104, 105, 109, 111, 112, 114 or 120. Heater pipes must be of welded construction designed for a test pressure of 500 pounds per square inch. A 25 mm (1 inch) woven lining of asbestos or other approved material must be placed between the bolster slabbing and the bottom of the tank. If a tank car tank is equipped with a safety vent of the frangible disc type, the frangible disc must be perforated with a 3.2 mm (0.13 inch) diameter hole. If a tank car tank is equipped with a safety relief valve, the tank car tank must also be equipped with a vacuum relief valve.

B80 Each cargo tank must have a minimum design pressure of 276 kPa (40 psig).

B81 Venting and pressure relief devices for tank car tanks and cargo tanks must be approved by the Associate Administrator for Hazardous Materials Safety.

B82 Cargo tanks and portable tanks are not authorized.

B83 Bottom outlets are prohibited on tank car tanks transporting sulfuric acid in concentrations over 65.25 percent.

B84 Packagings must be protected with non-metallic linings impervious to the lading or have a suitable corrosion allowance for sulfuric acid or spent sulfuric acid in concentration up to 65.25 percent.

B85 Cargo tanks must be marked with the name of the lading in accordance with the requirements of § 172.302(b).

B90 Steel tanks conforming or equivalent to ASME specifications which contain solid or semisolid residual motor fuel anti-knock mixture (including rust, scale, or

other contaminants) may be shipped by rail freight or highway. The tank must have been designed and constructed to be capable of withstanding full vacuum. All openings must be closed with gasketed blank flanges or vapor tight threaded closures.

B100 Intermediate bulk containers are not authorized.

B101 Authorized only in metal intermediate bulk containers.

B103 If an intermediate bulk container is used, the package must be transported in a closed freight container or transport vehicle.

B104 Intermediate bulk containers must be provided with a device to allow venting during transport. The inlet to the pressure relief valve must communicate with the vapor space of the packaging and lading during transport.

B105 Authorized only in rigid intermediate bulk containers.

B106 Authorized in intermediate bulk containers that are vapor tight.

B108 Authorized in sift-proof, water-resistant flexible, fiberboard or wooden intermediate bulk containers; packed in a closed transport vehicle.

B109 Not authorized in flexible intermediate bulk containers.

B110 This material also may be packaged in IBCs authorized in §173.242(d) of this subchapter.

B115 Rail cars, highway trailers, roll-on/roll-off bins, or other non-specification bulk packagings are authorized. Packagings must be sift-proof, prevent liquid water from reaching the hazardous material, and be provided with sufficient venting to preclude dangerous accumulation of flammable, corrosive, or toxic gaseous emissions such as methane, hydrogen, and ammonia. The material must be loaded dry.

(4) *''H'' codes.* These provisions apply only to transportation by highway. [Reserved]

(5) *''N'' codes.* These provisions apply only to non-bulk packagings:

Code/Special Provisions

N3 Glass inner packagings are permitted in combination or composite packagings only if the hazardous material is free from hydrofluoric acid.

N4 For combination or composite packagings, glass inner packagings, other than ampoules, are not permitted.

N5 Glass materials of construction are not authorized for any part of a packaging which is normally in contact with the hazardous material.

N6 Battery fluid packaged with electric storage batteries, wet or dry, must conform to the packaging provisions of §173.159 (g) or (h) of this subchapter.

N7 The hazard class or division number of the material must be marked on the package in accordance with §172.302 of this subchapter. However, the hazard label corresponding to the hazard class or division may be substituted for the marking.

N8 Nitroglycerin solution in alcohol may be transported under this entry only when the solution is packed in metal cans of not more than 1 L capacity each, overpacked in a wooden box containing not more than 5 L. Metal cans must be completely surrounded with absorbent cushioning material. Wooden boxes must be completely lined with a suitable material impervious to water and nitroglycerin.

N9 If the substance is impregnated with less than 5% oil, it is excepted from the labeling requirements of subpart D of this part and the packaging tests of subpart M of part 178 of this subchapter.

N10 Lighters and their inner packagings, which have been approved by the Associate Administrator for Hazardous Materials Safety (see §173.21(i) of this subchapter), must be packaged in one of the following outer packagings at the Packing Group II level: 4C1 or 4C2 wooden boxes; 4D plywood boxes; 4F reconstituted wood boxes; 4G fiberboard boxes; or 4H1 or 4H2 plastic boxes.

N11 This material is excepted for the specification packaging requirements of this subchapter if the material is packaged in strong, tight non-bulk packaging meeting the requirements of subparts A and B of part 173 of this subchapter.

N12 Plastic packagings are not authorized.

N20 A 5M1 multi-wall paper bag is authorized if transported in a closed transport vehicle.

N25 Steel single packagings are not authorized.

N32 Aluminum materials of construction are not authorized for single packagings.

N33 Aluminum drums are not authorized.

N34 Aluminum construction materials are not authorized for any part of a packaging which is normally in contact with the hazardous material.

N36 Aluminum or aluminum alloy construction materials are permitted only for halogenated hydrocarbons that will not react with aluminum.

N37 This material may be shipped in an integrally-lined fiber drum (1G) which meets the general packaging requirements of subpart B of part 173 of this subchapter, the requirements of part 178 of this subchapter at the packing group assigned for the material and to any other special provisions of column 7 of the §172.101 table.

N40 This material is not authorized in the following packagings:

a. A combination packaging consisting of a 4G fiberboard box with inner receptacles of glass or earthenware;
b. A single packaging of a 4C2 sift-proof, natural wood box; or
c. A composite packaging 6PG2 (glass, porcelain or stoneware receptacles within a fiberboard box).

N41 Metal construction materials are not authorized for any part of a packaging which is normally in contact with the hazardous material.

N42 1A1 drums made of carbon steel with thickness of body and heads of not less than 1.3 mm (0.050 inch) and with a corrosion-resistant phenolic lining are authorized for stabilized benzyl chloride if tested and certified to the Packing Group I performance level at a specific gravity of not less than 1.8.

N43 Metal drums are permitted as single packagings only if constructed of nickel or monel.

N45 Copper cartridges are authorized as inner packagings if the hazardous material is not in dispersion.

N65 Outage must be sufficient to prevent cylinders or spheres from becoming liquid full at 55 °C (130 °F). The vacant space (outage) may be charged with a nonflammable nonliquefied compressed gas if the pressure in the cylinder or sphere at 55 °C (130 °F) does not exceed 125 percent of the marked service pressure.

N71 Combination packagings consisting of inner glass packagings of not over 1.0 L (0.3 gallon) capacity each or inner metal packagings of not over 5.0 L (1 gallon) capacity each, placed in strong outer packagings, are authorized. Packagings are not subject to the requirements of part 178 of this subchapter.

N72 Packagings must be examined by the Bureau of Explosives and approved by the Associate Administrator for Hazardous Materials Safety.

N73 Packagings consisting of outer wooden or fiberboard boxes with inner glass, metal or other strong containers; metal or fiber drums; kegs or barrels; or strong metal cans are authorized and need not conform to the requirements of part 178 of this subchapter.

N74 Packages consisting of tightly closed inner containers of glass, earthenware, metal or polyethylene, capacity not over 0.5 kg (1.1 pounds) securely cushioned and packed in outer wooden barrels or wooden or fiberboard boxes, not over 15 kg (33 pounds) net weight, are authorized and need not conform to the requirements of part 178 of this subchapter.

N75 Packages consisting of tightly closed inner packagings of glass, earthenware or metal, securely cushioned and packed in outer wooden barrels or wooden or fiberboard boxes, capacity not over 2.5 kg (5.5 pounds) net weight, are authorized and need not conform to the requirements of part 178 of this subchapter.

N76 For materials of not more than 25 percent active ingredient by weight, packages consisting of inner metal packagings not greater than 250 ml (8 ounces) capacity each, packed in strong outer packagings together with sufficient absorbent material to completely absorb the liquid contents are authorized and need not conform to the requirements of part 178 of this subchapter.

N77 For materials of not more than two percent active ingredients by weight, packagings need not conform to the requirements of part 178 of this subchapter, if liquid contents are absorbed in an inert material.

N78 Packages consisting of inner glass, earthenware, or polyethylene or other nonfragile plastic bottles or jars not over 0.5 kg (1.1 pounds) capacity each, or metal cans not over five pounds capacity each, packed in outer wooden boxes, barrels or kegs, or fiberboard boxes are authorized and need not conform to the requirements of part 178 of this subchapter. Net weight of contents in fiberboard boxes may not exceed 29 kg (64 pounds). Net weight of contents in wooden boxes, barrels or kegs may not exceed 45 kg (99 pounds).

N79 Packages consisting of tightly closed metal inner packagings not over 0.5 kg (1.1 pounds) capacity each, packed in outer wooden or fiberboard boxes, or wooden barrels, are authorized and need not conform to the requirements of part 178 of this subchapter. Net weight of contents may not exceed 15 kg (33 pounds).

N80 Packages consisting of one inner metal can, not over 2.5 kg (5.5 pounds) capacity, packed in an outer wooden or fiberboard box, or a wooden barrel, are authorized and need not conform to the requirements of part 178 of this subchapter.

N82 See § 173.306 of this subchapter for classification criteria for flammable aerosols.

(6) *''R'' codes.* These provisions apply only to transportation by rail. [Reserved]

(7) *''T'' codes.* These provisions apply only to transportation in IM portable tanks. They are divided into two groupings, one of which appears as IM Tank Configurations in paragraph (c)(7)(i) of this section, and the second of which imposes specific requirements and appears in paragraph (c)(7)(ii) of this section.

(i) *IM Tank Configurations.* Column 1 lists the code for the special provisions as specified in column 7 of the § 172.101 table. Column 2 specifies the IM tank

type, either IM 101 (§§ 178.270 and 178.271 of this subchapter) or IM 102 (§§ 178.270 and 178.272 of this subchapter). Column 3 specifies the minimum test pressure, in bars (1 bar = 14.5 psig), at which the periodic hydrostatic testing required by § 173.32b of this subchapter must be conducted. Column 4 specifies either the section referenced for requirements for bottom openings or ''Prohibited'', which means bottom openings are prohibited. Column 5 specifies the section reference for requirements applicable to pressure relief devices.

IM TANK CONFIGURATIONS

Code (1)	IM tank type (2)	Minimum test Pressure (bars) (3)	Bottom outlets (4)	Pressure relief devices (5)
T1	102	1.5	§ 173.32c(g)(1)	§ 178.270–11(a)(1),(2)
T2	102	1.5	§ 173.32c(g)(2)	§ 178.270–11(a)(1),(2)
T7	101	2.65	§ 173.32c(g)(1)	§ 178.270–11(a)(1),(2)
T8	101	2.65	§ 173.32c(g)(2)	§ 178.270–11(a)(1),(2)
T9	101	2.65	Prohibited	§ 178.270–11(a)(1),(2)
T11	101	2.65	§ 173.32c(g)(2)	§ 178.270–11(a)(3)
T12	101	2.65	Prohibited	§ 178.270–11(a)(3)
T13	101	4	§ 173.32c(g)(1)	§ 178.270–11(a)(1),(2)
T14	101	4	§ 173.32c(g)(2)	§ 178.270–11(a)(1),(2)
T15	101	4	Prohibited	§ 178.270–11(a)(1),(2)
T16	101	4	§ 173.32c(g)(1)	§ 178.270–11(a)(3)
T17	101	4	§ 173.32c(g)(2)	§ 178.270–11(a)(3)
T18	101	4	Prohibited	§ 178.270–11(a)(3)
T20	101	6	§ 173.32c(g)(2)	§ 178.270–11(a)(1),(2)
T21	101	6	Prohibited	§ 178.270–11(a)(1),(2)
T22	101	6	§ 173.32c(g)(1)	§ 178.270–11(a)(1)(2)
T23	101	6	§ 173.32c(g)(2)	§ 178.270–11(a)(3)
T24	101	6	Prohibited	§ 178.270–11(a)(3)
T28	101	10	Prohibited	§ 178.270–11(a)(1),(2)
T39	101	10	Prohibited	§ 178.270–11(a)(3)
T43	101	9	Prohibited	§ 178.270–11(a)(3)

(ii) *IM Tank special provisions.*

Code/Special Provisions

T25 This hazardous material is not permitted for transport in IM portable tanks.

T26 Each tank must have a minimum shell thickness of 6.35 mm (0.250 inch) mild steel.

T27 Each tank must have a minimum shell thickness of 8.0 mm (0.315 inch) mild steel.

T28 See entry for T28 in the IM Tank Configuration Table in paragraph (c)(7)(i) of this section.

T29 The lading must be completely covered with nitrogen, inert gas or other inert materials.

T30 IM 102 portable tanks without bottom openings or with bottom openings conforming to § 173.32c(g)(1) of this subchapter are authorized for a hazardous material with a flash point of O°C (32°F) or greater and a vapor pressure not greater than 65.5 kPa (9.5 psia) at 65.6°C (150°F).

T31 IM 102 portable tanks without bottom openings or with bottom openings conforming to § 173.32c(g)(2) of this subchapter are authorized for a hazardous material with a flash point of 0 °C (32 °F) or greater and a vapor pressure not greater than 65 kPa (9.4 psia) at 65.6°C (150°F).

T32 Each tank must have a minimum shell thickness of 10.0 mm (0.394 inch) mild steel with at least 5.0 mm (0.197 inch) lead lining.

T33 Dry phosphorus is not permitted. For transport in a molten state, the tank must be insulated in accordance with Note T38. Air must be eliminated from the interior of the tank. The tank may be heated, however, interior heating coils are prohibited.

T34 The IM Tank authorization is limited to aqueous solutions containing not more than 40% dimethylamine.

T35 Each tank must be equipped with reclosing (spring loaded) pressure relief valves set to discharge at pressures determined according to the pressure characteristics of the organic peroxide lading.

T36 Each tank must be equipped with pressure relief devices with sufficient venting capacity to prevent the tank from bursting.

T37 IM portable tanks are only authorized for the shipment of hydrogen peroxide solutions in water containing 72 percent or less hydrogen peroxide by weight. Pressure relief devices shall be designed to prevent the entry of foreign matter, the leakage of liquid and the development of any dangerous excess pressure. In addition, the

tank shall be designed so that internal surfaces may be effectively cleaned and passivated. Each tank must be equipped with pressure relief devices conforming to the following requirements:

Concentration of hydrogen peroxide solution	Total venting capacity in standard cubic feet per hour (S.C.F.H.) per pound of hydrogen peroxide solution
52 percent or less	11
Over 52 percent but not greater than 60 percent	22
Over 60 percent but not greater than 72 percent	32

T38 Each tank must be insulated with an insulating material so that the overall thermal conductance at 15.5° C (60° F) is no more than 1.5333 kilojoules per hour per square meter per degree Celsius (0.075 Btu per hour per square foot per degree Fahrenheit) temperature differential. Insulating materials must not promote corrosion to steel when wet. Notwithstanding the requirements in §171.14(b)(4)(ii) of this subchapter, compliance with this provision is delayed until October 1, 1994, for a bulk packaging containing a material poisonous by inhalation which, when in contact with moisture, becomes highly corrosive and could cause corrosion under an insulation blanket.

T39 See entry for T39 in the IM Tank Configuration Table in paragraph (c)(7)(i) of this section.

T40 Each tank must have a minimum shell thickness of 10.0 mm (0.39 inch) mild steel.

T41 Each tank must have a minimum shell thickness of 12.0 mm (0.47 inch) mild steel.

T42 Transport in IM portable tanks is permitted only under conditions approved by the Associate Administrator for Hazardous Materials Safety.

T43 See entry for T43 in the IM Tank Configuration Table in paragraph (c)(7)(i) of this section.

T44 DOT Specification IM 101 portable tanks shall be made of stainless steel except that steel other than stainless steel may be used in accordance with the provisions of §173.24b(b) of this subchapter. Thickness of stainless steel for tank shell and heads must be the greater of 7.62 mm (0.300 inch) or the thickness required for a tank with a design pressure at least equal to 1.5 times the vapor pressure of the lading at 46 °C (115 °F).

T45 DOT Specification IM 101 portable tanks shall be made of stainless steel except that steel other than stainless steel may be used in accordance with the provisions of §173.24b(b) of this subchapter. Thickness of stainless steel for tank shell and heads must be the greater of 6.35 mm (0.250 inch) or the thickness required for a tank with a design pressure at least equal to 1.3 times the vapor pressure of the lading at 46 °C (115 °F).

T46 IM portable tanks in sodium metal service are not required to be hydrostatically retested.

T47 Temperature must be maintained between 18°C (64.4°F) and 40°C (104°F) when carried in tanks. Tanks containing solidified methyacrylic acid may not be reheated during transport.

(8) *''W'' codes.* These provisions apply only to transportation by water:

Code/Special Provisions

W41 When offered for transportation by water, this material must be packaged in bales and be securely and tightly bound with rope, wire or similar means.

[Amdt. 172–123, 55 FR 52582, Dec. 21, 1990]

EDITORIAL NOTE: For FEDERAL REGISTER citations affecting §172.102, see the List of CFR Sections Affected in the Finding Aids section of this volume.

Subpart C—Shipping Papers

§ 172.200 Applicability.

(a) *Description of hazardous materials required.* Except as otherwise provided in this subpart, each person who offers a hazardous material for transportation shall describe the hazardous material on the shipping paper in the manner required by this subpart.

(b) This subpart does not apply to any material, other than a hazardous substance, hazardous waste or marine pollutant, that is—

(1) Identified by the letter ''A'' in Column 1 of the §172.101 Table, except when the material is offered or intended for transportation by air; or

(2) Identified by the letter ''W'' in Column 1 of the §172.101 Table, except when the material is offered or intended for transportation by water; or

(3) An ORM–D, except when the material is offered or intended for transportation by air.

[Amdt. 172–29A, 41 FR 40677, Sept. 20, 1976, as amended by Amdt. 172–58, 45 FR 34697, May 22, 1980; Amdt. 172–74, 47 FR 43065, Sept. 30, 1982; Amdt. 172–112, 53 FR 17160, May 13, 1988; Amdt. 172–127, 57 FR 52938, Nov. 5, 1992]

§ 172.201 General entries.

(a) *Contents.* When a description of hazardous material is required to be included on a shipping paper, that description must conform to the following requirements:

(1) When a hazardous material and a material not subject to the requirements of this subchapter are described on the same shipping paper, the hazardous material description entries required by § 172.202 and those additional entries that may be required by § 172.203:

(i) Must be entered first, or

(ii) Must be entered in a color that clearly contrasts with any description on the shipping paper of a material not subject to the requirements of this subchapter, except that a description on a reproduction of a shipping paper may be highlighted, rather than printed, in a contrasting color (the provisions of this paragraph apply only to the basic description required by § 172.202(a) (1) and (2), and (3)), or

(iii) Must be identified by the entry of an ''X'' placed before the proper shipping name in a column captioned ''HM.'' (The ''X'' may be replaced by ''RQ,'' if appropriate.)

(2) The required shipping description on a shipping paper and all copies thereof used for transportation purposes, must be legible and printed (manually or mechanically) in English.

(3) Unless it is specifically authorized or required in this subchapter, the required shipping description may not contain any code or abbreviation.

(4) A shipping paper may contain additional information concerning the material provided the information is not inconsistent with the required description. Unless otherwise permitted or required by this subpart, additional information must be placed after the basic description required by § 172.202(a).

(b) [Reserved]

(c) *Continuation page.* A shipping paper may consist of more than one page, if each page is consecutively numbered and the first page bears a notation specifying the total number of pages included in the shipping paper. For example, ''Page 1 of 4 pages.''

(d) *Emergency response telephone number.* Except as provided in § 172.604(c), a shipping paper must contain an emergency response telephone number, as prescribed in subpart G of this part.

[Amdt. 172–29A, 41 FR 40677, Sept. 20, 1976, as amended by Amdt. 172–29B, 41 FR 57067, Dec. 30, 1976; Amdt. 172–58, 45 FR 34697, May 22, 1980; Amdt. 172–58, 45 FR 74664, Nov. 10, 1980; Amdt. 172–90, 49 FR 10510, Mar. 20, 1984; Amdt. 172–116, 54 FR 27144, June 27, 1989; Amdt. 172–123, 55 FR 52589, Dec. 21, 1990; Amdt. 172–147, 61 FR 18932, Apr. 29, 1996; Amdt. 172–149, 61 FR 27172, May 30, 1996]

§ 172.202 Description of hazardous material on shipping papers.

(a) The shipping description of a hazardous material on the shipping paper must include:

(1) The proper shipping name prescribed for the material in Column 2 of the § 172.101 Table;

(2) The hazard class or division prescribed for the material as shown in Column 3 of the § 172.101 Table (class names or subsidiary hazard class or division number may be entered following the numerical hazard class, or following the basic description). The hazard class need not be included for the entry ''Combustible liquid, n.o.s.'';

(3) The identification number prescribed for the material as shown in Column 4 of the § 172.101 Table;

(4) The packing group, in Roman numerals, prescribed for the material in Column 5 of the § 172.101 Table, if any. The packing group may be preceded by the letters ''PG'' (e.g., ''PG II''); and

(5) Except for empty packagings (see § 173.29 of this subchapter), cylinders for Class 2 (compressed gases) materials, and bulk packagings, the total quantity (by net or gross mass, capacity, or as otherwise appropriate), including the unit of measurement, of the hazardous material covered by the description (e.g., ''800 lbs'', ''55 gal.'', ''3629 kg'', or ''208 L''). For cylinders for Class 2 (compressed gases) materials and bulk packagings, some indication of total quantity must be shown (e.g., ''10 cylinders'' or ''1 cargo tank'').

(b) Except as provided in this subpart, the basic description specified in paragraphs (a) (1), (2), (3) and (4) of this section must be shown in sequence with no additional information interspersed. For example: ''Gasoline, 3, UN 1203, PG II''.

(c) The total quantity of the material covered by one description must appear before or after, or both before and after, the description required and authorized by this subpart. The type of packaging and destination marks may be entered in any appropriate manner before or after the basic description. Abbreviations may be used to express units of measurement and types of packagings.

(d) Technical and chemical group names may be entered in parentheses between the proper shipping name and hazard class or following the basic description. An appropriate modifier, such as ''contains'' or ''containing,'' and/or the percentage of the technical constituent may also be used. For example: ''Flammable liquids, n.o.s. (contains Xylene and Benzene), 3, UN 1993, II''.

(e) Except for those materials in the UN Recommendations, the ICAO Technical Instructions, or the IMDG Code, a material that is not a hazardous material according to this subchapter may not be offered for transportation or transported when its description on a shipping paper includes a hazard class or an identification number specified in § 172.101.

[Amdt. 172–101, 45 FR 74665, Nov. 10, 1980, as amended by Amdt. 172–103, 51 FR 5970, Feb. 18, 1986; Amdt. 172–123, 55 FR 52589, Dec. 21, 1990; 56 FR 66252, Dec. 20, 1991; Amdt. 172–127, 57 FR 52938, Nov. 5, 1992; Amdt. 172–130, 58 FR 51531, Oct. 1, 1993]

§ 172.203 Additional description requirements.

(a) *Exemptions.* Each shipping paper issued in connection with a shipment made under an exemption must bear the notation ''DOT–E'' followed by the exemption number assigned and so located that the notation is clearly associated with the description to which the exemption applies.

(b) *Limited quantities.* The description for a material offered for transportation as ''limited quantity,'' as authorized by this subchapter, must include the words ''Limited Quantity'' or ''Ltd Qty'' following the basic description.

(c) *Hazardous substances.* (1) Except for Class 7 (radioactive) materials described in accordance with paragraph (d) of this section, if the proper shipping name for a material that is a hazardous substance does not identify the hazardous substance by name, the name of the hazardous substance must be entered in parentheses in association with the basic description. If the material contains two or more hazardous substances, at least two hazardous substances, including the two with the lowest reportable quantities (RQs), must be identified. For a hazardous waste, the waste code (e.g., D001), if appropriate, may be used to identify the hazardous substance.

(2) The letters ''RQ'' shall be entered on the shipping paper either before or after, the basic description required by § 172.202 for each hazardous substance (see definition in § 171.8 of this subchapter). For example: ''RQ, Allyl alcohol, 6.1, UN 1098, I''; or ''Environmentally hazardous substance, solid, n.o.s., 9, UN 3077, III, RQ (Adipic acid)''.

(d) *Radioactive material.* The description for a shipment of a Class 7 (radioactive) material must include the following additional entries as appropriate:

(1) The words ''RADIOACTIVE MATERIAL'' unless these words are contained in the proper shipping name.

(2) The name of each radionuclide in the Class 7 (radioactive) material that is listed in § 173.435 of this subchapter. For mixtures of radionuclides, the radionuclides that must be shown must be determined in accordance with § 173.433(f) of this subchapter. Abbreviations, e.g., ''^{99}Mo'', are authorized.

(3) A description of the physical and chemical form of the material, if the material is not in special form (generic chemical description is acceptable for chemical form).

(4) The activity contained in each package of the shipment in terms of the appropriate SI units (e.g. Becquerel, Terabecquerel, etc.) or in terms of the appropriate SI units followed by the customary units (e.g. Curies, millicuries, etc.). Alternatively, for domestic transportation, the activity in a package of Class 7 (radioactive) materials may be described solely in terms

of curies until April 1, 1997. Abbreviations are authorized. Except for plutonium-238, plutonium-239, and plutonium-241, the weight in grams or kilograms of fissile radionuclides may be inserted instead of activity units. For plutonium-238, plutonium-239, and plutonium-241 the weight in grams or kilograms of fissile radionuclides may be inserted in addition to the activity units. For the shipment of a package containing a highway route controlled quantity of Class 7 (radioactive) materials (see §173.403 of this subchapter) the words ''Highway route controlled quantity'' must be entered in association with the basic description.

(5) The category of label applied to each package in the shipment. For example: ''RADIOACTIVE WHITE–I.''

(6) The transport index assigned to each package in the shipment bearing RADIOACTIVE YELLOW–II or RADIOACTIVE YELLOW–III labels.

(7) For a shipment of fissile Class 7 (radioactive) materials:

(i) The words ''Fissile Excepted'' if the package is excepted pursuant to §173.453 of this subchapter;

(ii) For a fissile material, controlled shipment, the additional notation: ''Warning—Fissile material, controlled shipment. Do not load more than * * * packages per vehicle.'' (Asterisks to be replaced by appropriate number.) ''In loading and storage areas, keep at least 6 meters (20 feet) from other packages bearing radioactive labels''; and

(iii) If a fissile material, controlled shipment is to be transported by water, the supplementary notation must also include the following statement: ''For shipment by water, only one fissile material, controlled shipment is permitted in each hold.''

(8) For a package approved by the U.S. Department of Energy (DOE) or U.S. Nuclear Regulatory Commission (USNRC), a notation of the package identification marking as prescribed in the applicable DOE or USNRC approval. (See §173.471 of the subchapter.)

(9) For an export shipment or a shipment in a foreign made package, a notation of the package identification marking as prescribed in the applicable International Atomic Energy Agency (IAEA) Certificate of Competent Authority which has been issued for the package. (See §173.473 of the subchapter.)

(10) For a shipment required by this subchapter to be consigned as exclusive use:

(i) An indication that the shipment is consigned as exclusive use; or

(ii) If all the descriptions on the shipping paper are consigned as exclusive use, then the statement ''Exclusive Use Shipment'' may be entered only once on the shipping paper in a clearly visible location.

(11) For a shipment of low specific activity material or surface contaminated objects, the appropriate group notation of LSA–I, LSA–II, LSA–III, SCO–I, or SCO–II.

(e) *Empty packagings.* (1) The description on the shipping paper for a packaging containing the residue of a hazardous material may include the words ''RESIDUE: Last Contained * * *'' in association with the basic description of the hazardous material last contained in the packaging.

(2) The description on the shipping paper for a tank car containing the residue of a hazardous material must include the phrase, ''RESIDUE: LAST CONTAINED * * *'' before the basic description.

(f) *Transportation by air.* When a package containing a hazardous material is offered for transportation by air and this subchapter prohibits its transportation aboard passenger-carrying aircraft, the words ''Cargo aircraft only'' must be entered after the basic description.

(g) *Transportation by rail.* (1) A shipping paper prepared by a rail carrier for a rail car, freight container, transport vehicle or portable tank that contains hazardous materials must include the reporting mark and number when displayed on the rail car, freight container, transport vehicle or portable tank.

(2) The shipping paper for each DOT–113 tank car containing a Division 2.1 material or its residue must contain an appropriate notation, such as ''DOT 113'', and the statement ''Do not hump or cut off car while in motion.''

(3) When shipments of elevated temperature materials are transported under the exception permitted in §173.247(h)(3) of this subchapter, the

shipping paper must contain an appropriate notation, such as ''Maximum operating speed 15 mph.''.

(h) *Transportation by highway.* Following the basic description for a hazardous material in a Specification MC 330 or MC 331 cargo tank, there must be entered for—

(1) *Anhydrous ammonia.* (i) The words ''0.2 PERCENT WATER'' to indicate the suitability for shipping anhydrous ammonia in a cargo tank made of quenched and tempered steel as authorized by § 173.315(a), Note 14 of this subchapter, or

(ii) The words ''NOT FOR Q and T TANKS'' when the anhydrous ammonia does not contain 0.2 percent or more water by weight.

(2) *Liquefied petroleum gas.* (i) The word ''NONCORROSIVE'' or ''NONCOR'' to indicate the suitability for shipping ''Noncorrosive'' liquefied petroleum gas in a cargo tank made of quenched and tempered steel as authorized by § 173.315(a), Note 15 of this subchapter, or

(ii) The words ''NOT FOR Q and T TANKS'' for grades of liquefied petroleum gas other than ''Noncorrosive''.

(i) *Transportation by water.* Each shipment by water must have the following additional shipping paper entries:

(1) Identification of the type of packagings such as barrels, drums, cylinders, and boxes.

(2) The number of each type of package including those in a freight container or on a pallet.

(3) The gross mass of each type of package or the individual gross mass of each package.

(4) The name of the shipper.

(j)[Reserved]

(k) *Technical names for ''n.o.s.'' and other generic descriptions.* Unless otherwise excepted, if a material is described on a shipping paper by one of the proper shipping names listed in paragraph (k)(3) of this section, the technical name of the hazardous material must be entered in parentheses in association with the basic description. For example ''Corrosive liquid, n.o.s., (Caprylyl chloride), 8, UN 1760, II'', or ''Corrosive liquid, n.o.s., 8, UN 1760, II (contains Caprylyl chloride)''. The word ''contains'' may be used in association with the technical name, if appropriate. For organic peroxides which may qualify for more than one generic listing depending on concentration, the technical name must include the actual concentration being shipped or the concentration range for the appropriate generic listing. For example, ''Organic peroxide type B, solid, 5.2, UN 3102 (dibenzoyl peroxide, 52–100%)'' or ''Organic peroxide type E, solid, 5.2, UN 3108 (dibenzoyl peroxide, paste, <52%)''.

(1) In addition to the n.o.s. descriptions listed herein, the requirements of this section apply to all shipping descriptions for poisonous materials which are subject to the requirements of paragraph (m) of this section, and for which the proper shipping name does not specifically identify the poisonous constituent by technical name. For example, ''Motor fuel antiknock mixtures (Tetraethyl lead), 6.1 , UN 1649, I'', or ''Motor fuel antiknock mixtures, 6.1. UN 1649, I (Tetraethyl lead)''.

(2) If a hazardous material is a mixture or solution of two or more hazardous materials, the technical names of at least two components most predominately contributing to the hazards of the mixture or solution must be entered on the shipping paper as required by paragraph (k) of this section. For example, ''Flammable liquid, corrosive, n.o.s., 3, UN 2924, II (contains Methanol, Potassium hydroxide)''.

(3) Proper shipping names for which the provisions of this paragraph apply are as follows:

Alcoholates solution, n.o.s., *in alcohol*
Alcohols, toxic, n.o.s.
Aldehydes, toxic, n.o.s.
Alkali metal alcoholates, self-heating, corrosive, n.o.s.
Alkaline earth metal alcoholates, n.o.s.
Amines, flammable, corrosive, n.o.s. *or* Polyamines, flammable, corrosive, n.o.s.
Amines, liquid, corrosive, flammable, n.o.s. *or* Polyamines, liquid, corrosive, flammable, n.o.s.
Amines, liquid, corrosive, n.o.s. *or* Polyamines, liquid, corrosive, n.o.s.
Amines, solid, corrosive, n.o.s. *or* Polyamines, solid, corrosive, n.o.s.
Articles, explosive, n.o.s.
Caustic alkali liquids, n.o.s.
Charges, propelling
Chloroformates, toxic, corrosive, n.o.s.
Combustible liquid, n.o.s.
Components, explosive train, n.o.s.
Compounds, cleaning liquid, *corrosive, flammable, toxic*

Compounds, tree *or* weed killing, liquid, *flammable, corrosive, toxic*
Compressed gas, toxic, corrosive, n.o.s.
Compressed gas, toxic, flammable, corrosive, n.o.s.
Compressed gas, toxic, oxidizing, corrosive, n.o.s.
Compressed gas, toxic, oxidizing, n.o.s.
Compressed *or* Liquefied gases, flammable, n.o.s.
Compressed *or* Liquefied gases, n.o.s.
Compressed *or* Liquefied gases, oxidizing, n.o.s.
Compressed *or* Liquefied gases, toxic, flammable, n.o.s.
Compressed *or* Liquefied gases, toxic, n.o.s.
Contrivances, water-activated
Corrosive, liquid, acidic, inorganic *or* organic, n.o.s.
Corrosive, liquid, basic, inorganic *or* organic, n.o.s.
Corrosive liquids, flammable, n.o.s.
Corrosive liquids, n.o.s.
Corrosive liquids, oxidizing, n.o.s.
Corrosive liquids, toxic, n.o.s.
Corrosive liquids, water-reactive, n.o.s.
Corrosive, solid, acidic, inorganic *or* organic, n.o.s.
Corrosive, solid, basic, inorganic *or* organic, n.o.s.
Corrosive solids, flammable, n.o.s.
Corrosive solids, n.o.s.
Corrosive solids, oxidizing, n.o.s.
Corrosive solids, self-heating, n.o.s.
Corrosive solids, toxic, n.o.s.
Corrosive solids, water-reactive, n.o.s.
Disinfectants, liquid, corrosive, n.o.s.
Disinfectants, liquid, toxic, n.o.s.
Disinfectants, solids, toxic, n.o.s.
Dispersant gas, n.o.s.
Dyes, liquid, corrosive, n.o.s. *or* Dye intermediates, liquid, corrosive, n.o.s.
Dyes, liquid, toxic, n.o.s. *or* Dye intermediates, liquid, toxic, n.o.s.
Dyes, solid, corrosive, n.o.s. *or* Dye intermediates, solid, corrosive, n.o.s.
Dyes, solid, toxic, n.o.s. *or* Dye intermediates, solid, toxic, n.o.s.
Environmentally hazardous substances, liquid *or* solid, n.o.s.
Flammable gases, solid, corrosive, n.o.s.
Flammable liquids, corrosive, n.o.s.
Flammable liquids, n.o.s.
Flammable liquids, toxic, corrosive, n.o.s.
Flammable liquids, toxic, n.o.s.
Flammable solids, corrosive, organic *or* inorganic, n.o.s.
Flammable solids, organic, molten, n.o.s.
Flammable solids, organic *or* inorganic, n.o.s.
Flammable solids, toxic, organic *or* inorganic, n.o.s.
Gas, refrigerated liquid, flammable, n.o.s.
Gas, refrigerated liquid, oxidizing, n.o.s.
Halogenated irritating liquids, n.o.s.
Hazardous waste, liquid *or* solid, n.o.s.
Hydrocarbon gases, compressed, n.o.s.
Hydrocarbon gases, liquefied, n.o.s.
Hydrocarbon gases mixtures, compressed, n.o.s.
Hydrocarbon gases mixtures, liquefied, n.o.s.
Hydrocarbons, liquid, n.o.s.
Infectious substances, affecting animals
Infectious substances, affecting humans
Insecticide gases, n.o.s.
Insecticide gases, toxic, n.o.s.
Isocyanates, flammable, toxic, n.o.s. *or* Isocyanates solutions, flammable, toxic, n.o.s.
Isocyanates, toxic, flammable, n.o.s. *or* Isocyanates solutions, toxic, flammable, n.o.s.
Liquefied gas, toxic, corrosive, n.o.s.
Liquefied gas, toxic, flammable, corrosive, n.o.s.
Liquefied gas, toxic, oxidizing, corrosive, n.o.s.
Liquefied gas, toxic, oxidizing, n.o.s.
Medicines, liquid, flammable, toxic, n.o.s.
Medicines, liquid, toxic, n.o.s.
Medicine, solid, toxic, n.o.s.
Metal powder, self-heating, n.o.s.
Metal salts of organic compounds, flammable, n.o.s.
Metallic substance, water-reactive, n.o.s.
Metallic substance, water-reactive, self-heating, n.o.s.
Nitriles, flammable, toxic, n.o.s.
Nitriles, toxic, flammable, n.o.s.
Nitriles, toxic, n.o.s.
Organic peroxide type B, liquid
Organic peroxide type B, liquid, temperature controlled
Organic peroxide type B, solid
Organic peroxide type B, solid, temperature controlled
Organic peroxide type C, liquid
Organic peroxide type C, liquid, temperature controlled
Organic peroxide type C, solid
Organic peroxide type C, solid, temperature controlled
Organic peroxide type D, liquid
Organic peroxide type D, liquid, temperature controlled
Organic peroxide type D, solid
Organic peroxide type D, solid, temperature controlled
Organic peroxide type E, liquid
Organic peroxide type E, liquid, temperature controlled
Organic peroxide type E, solid
Organic peroxide type E, solid, temperature controlled
Organic peroxide type F, liquid
Organic peroxide type F, liquid, temperature controlled
Organic peroxide type F, solid
Organic peroxide type F, solid, temperature controlled
Organometallic compound, toxic, n.o.s.
Organometallic compound dispersion, water-reactive, flammable, n.o.s.

Organometallic compound solution, water-reactive, flammable, n.o.s.
Organometallic compound, water reactive, flammable, n.o.s.
Other regulated substances, liquid, n.o.s.
Other regulated substances, solid, n.o.s.
Oxidizing liquid, corrosive, n.o.s.
Oxidizing liquid, n.o.s.
Oxidizing liquid, toxic, n.o.s.
Oxidizing solid, corrosive, n.o.s.
Oxidizing solid, flammable, n.o.s.
Oxidizing solid, n.o.s.
Oxidizing solid, self-heating, n.o.s.
Oxidizing solid, toxic, n.o.s.
Oxidizing solid, water-reactive, n.o.s.
Pesticides, liquid, flammable, toxic, n.o.s.
Pesticides, liquid, toxic, flammable, n.o.s.
Pesticides, liquid, toxic, n.o.s.
Pesticides, solid, toxic, n.o.s.
Propellant, liquid
Propellant, solid
Pyrophoric liquids, organic *or* inorganic, n.o.s.
Pyrophoric metals, n.o.s. *or* Pyrophoric alloys, n.o.s.
Pyrophoric organometallic compound, n.o.s.
Pyrophoric solids, organic *or* inorganic, n.o.s.
Refrigerant gases, n.o.s.
Samples, explosive (*other than initiating explosives*)
Self-heating liquid, corrosive, inorganic, n.o.s.
Self-heating liquid, corrosive, organic, n.o.s.
Self-heating liquid, inorganic, n.o.s.
Self-heating liquid, organic, n.o.s.
Self-heating liquid, toxic, inorganic, n.o.s.
Self-heating liquid, toxic, organic, n.o.s.
Self-heating solid, corrosive, inorganic, n.o.s.
Self-heating solid, corrosive, organic, n.o.s.
Self-heating solid, organic or inorganic, n.o.s.
Self-heating solid, oxidizing, n.o.s.
Self-heating solid, toxic, organic or inorganic, n.o.s.
Self-reactive liquid type B
Self-reactive liquid type B, temperature controlled
Self-reactive liquid type C
Self-reactive liquid type C, temperature controlled
Self-reactive liquid type D
Self-reactive liquid type D, temperature controlled
Self-reactive liquid type E
Self-reactive liquid type E, temperature controlled
Self-reactive liquid type F
Self-reactive liquid type F, temperature controlled
Self-reactive solid type B
Self-reactive solid type B, temperature controlled
Self-reactive solid type C
Self-reactive solid type C, temperature controlled
Self-reactive solid type D
Self-reactive solid type D, temperature controlled
Self-reactive solid type E
Self-reactive solid type E, temperature controlled
Self-reactive solid type F
Self-reactive solid type F, temperature controlled
Solids containing corrosive liquid, n.o.s.
Solids containing flammable liquid, n.o.s.
Solids containing toxic liquid, n.o.s.
Substances, explosive, n.o.s.
Substances, explosive, very insensitive (substances, EVI), n.o.s.
Tear gas substances, liquid *or* solid, n.o.s.
Toxic liquids, corrosive, organic *or* inorganic, n.o.s.
Toxic liquids, flammable, organic *or* inorganic, n.o.s.
Toxic liquids, organic *or* inorganic, n.o.s.
Toxic liquids, oxidizing, n.o.s.
Toxic liquids, water-reactive, n.o.s.
Toxic solids, corrosive, organic *or* inorganic, n.o.s.
Toxic solids, flammable, organic *or* inorganic, n.o.s.
Toxic solids, organic *or* inorganic, n.o.s.
Toxic solids, oxidizing, n.o.s.
Toxic solids, self-heating, n.o.s.
Toxic solids, water-reactive, n.o.s.
Water-reactive, liquid, corrosive, n.o.s.
Water-reactive, liquid, n.o.s.
Water-reactive, liquid, toxic, n.o.s.
Water-reactive, solid, corrosive, n.o.s.
Water-reactive, solid, flammable, n.o.s.
Water-reactive, solid, n.o.s.
Water-reactive, solid, oxidizing, n.o.s.
Water-reactive, solid, self-heating, n.o.s.
Water-reactive, solid, toxic, n.o.s.

(4) The provisions of this paragraph do not apply—

(i) To a material that is a hazardous waste and described using the proper shipping name ''Hazardous waste, liquid *or* solid, n.o.s.'', classed as a miscellaneous Class 9, provided the EPA hazardous waste number is included on the shipping paper in association with the basic description, or provided the material is described in accordance with the provisions of § 172.203(c) of this part.

(ii) To a material for which the hazard class is to be determined by testing under the criteria in § 172.101(c)(11).

(iii) If the n.o.s. description for the material (other than a mixture of hazardous materials of different classes meeting the definitions of more than one hazard class) contains the name of the chemical element or group which is primarily responsible for the material

being included in the hazard class indicated.

(iv) If the n.o.s. description for the material (which is a mixture of hazardous materials of different classes meeting the definition of more than one hazard class) contains the name of the chemical element or group responsible for the material meeting the definition of one of these classes. In such cases, only the technical name of the component that is not appropriately identified in the n.o.s. description shall be entered in parentheses.

(l) *Marine pollutants.* (1) If the proper shipping name for a material which is a marine pollutant does not identify by name the component which makes the material a marine pollutant, the name of that component must appear in parentheses in association with the basic description. Where two or more components which make a material a marine pollutant are present, the names of at least two of the components most predominantly contributing to the marine pollutant designation must appear in parentheses in association with the basic description.

(2) The words ''Marine Pollutant'' shall be entered in association with the basic description for a material which is a marine pollutant.

(3) Except for transportation by vessel, marine pollutants subject to the provisions of 49 CFR 130.11 are excepted from the requirements of paragraph (l) of this section if a phrase indicating the material is an oil is placed in association with the basic description.

(m) *Poisonous materials.* Notwithstanding the hazard class to which a material is assigned—

(1) If a liquid or solid material in a package meets the definition of a Division 6.1, Packing Group I or II, according to this subchapter, and the fact that it is a poison is not disclosed in the shipping name or class entry, the word ''Poison or Toxic'' shall be entered on the shipping paper in association with the shipping description.

(2) If the technical name of the compound or principal constituent that causes a material to meet the definition of Division 6.1, Packing Group I or II (as defined in §173.132(a) of this subchapter), or Division 2.3 (as defined in §173.115(c) of this subchapter), is not included in the proper shipping name for the material, the technical name shall be entered on the shipping paper in the manner prescribed in paragraph (k) of this section.

(3) For materials which are poisonous by inhalation (see §171.8 of this subchapter), the words ''Poison-Inhalation Hazard''or ''Toxic-Inhalation Hazard'' and the words ''Zone A'', ''Zone B'', ''Zone C'', or ''Zone D'', for gases or ''Zone A'' or ''Zone B'' for liquids, as appropriate, shall be entered on the shipping paper immediately following the shipping description. The word ''Poison''or ''Toxic'' need not be repeated if it otherwise appears in the shipping description.

(n) *Elevated temperature materials.* Except for molten sulfur or molten aluminum, if a liquid material in a package meets the definition of an elevated temperature material in §171.8 of this subchapter, and the fact that it is an elevated temperature material is not disclosed in the shipping name, the word ''HOT'' must immediately precede the proper shipping name of the material on the shipping paper.

(o) *Organic peroxides and self-reactive materials.* The description on a shipping paper for a Division 4.1 (self-reactive) material or a Division 5.2 (organic peroxide) material must include the following additional information, as appropriate:

(1) If notification or competent authority approval is required, the shipping paper must contain a statement of approval of the classification and conditions of transport.

(2) For Division 4.1 (self-reactive) and Division 5.2 (organic peroxide) materials that require temperature control during transport, the control and emergency temperature must be included on the shipping paper.

(3) The word ''SAMPLE'' must be included in association with the basic description when a sample of a Division 4.1 (self-reactive) material (see §173.224(c)(4) of this subchapter) or Division 5.2 (organic peroxide) material (see §173.225(c)(4) of this subchapter) is offered for transportation or transported.

[Amdt. 172–29A, 41 FR 40677, Sept. 20, 1976]

EDITORIAL NOTE: For FEDERAL REGISTER citations affecting §172.203, see the List of

CFR Sections Affected appearing in the Finding Aids section of this volume.

§ 172.204 Shipper's certification.

(a) *General.* Except as provided in paragraphs (b) and (c) of this section, each person who offers a hazardous material for transportation shall certify that the material is offered for transportation in accordance with this subchapter by printing (manually or mechanically) on the shipping paper containing the required shipping description the certification contained in paragraph (a)(1) of this section or the certification (declaration) containing the language contained in paragraph (a)(2) of this section.

(1) ''This is to certify that the above-named materials are properly classified, described, packaged, marked and labeled, and are in proper condition for transportation according to the applicable regulations of the Department of Transportation.''

NOTE: In line one of the certification the words ''herein-named'' may be substituted for the words ''above-named''.

(2) ''I hereby declare that the contents of this consignment are fully and accurately described above by the proper shipping name, and are classified, packaged, marked and labelled/placarded, and are in all respects in proper condition for transport according to applicable international and national governmental regulations.''

(b) *Exceptions.* (1) Except for a hazardous waste, no certification is required for a hazardous material offered for transportation by motor vehicle and transported:

(i) In a cargo tank supplied by the carrier, or

(ii) By the shipper as a private carrier except for a hazardous material that is to be reshipped or transferred from one carrier to another.

(2) No certification is required for the return of an empty tank car which previously contained a hazardous material and which has not been cleaned or purged.

(c) *Transportation by air*—(1) *General.* Certification containing the following language may be used in place of the certification required by paragraph (a) of this section:

I hereby certify that the contents of this consignment are fully and accurately described above by proper shipping name and are classified, packed, marked and labeled, and in proper condition for carriage by air according to applicable national governmental regulations.

(2) *Certificate in duplicate.* Each person who offers a hazardous material to an aircraft operator for transportation by air shall provide two copies of the certification required in this section. (See § 175.30 of this subchapter.)

(3) *Passenger and cargo aircraft.* Each person who offers for transportation by air a hazardous material authorized for air transportation shall add to the certification required in this section the following statement:

This shipment is within the limitations prescribed for passenger aircraft/cargo aircraft only (delete nonapplicable).

(4) *Radioactive material.* Each person who offers any radioactive material for transportation aboard a passenger-carrying aircraft shall sign (mechanically or manually) a printed certificate stating that the shipment contains radioactive material intended for use in, or incident to, research, or medical diagnosis or treatment.

(d) *Signature.* The certifications required by paragraph (a) or (c) of this section:

(1) Must be legibly signed by a principal, officer, partner, or employee of the shipper or his agent; and

(2) May be legibly signed manually, by typewriter, or by other mechanical means.

[Amdt. 172–29A, 41 FR 40677, Sept. 20, 1976]

EDITORIAL NOTE: For FEDERAL REGISTER citations affecting § 172.204, see the List of CFR Sections Affected appearing in the Finding Aids section of this volume.

§ 172.205 Hazardous waste manifest.

(a) No person may offer, transport, transfer, or deliver a hazardous waste (waste) unless an EPA Form 8700–22 and 8700–22A (when necessary) hazardous waste manifest (manifest) is prepared in accordance with 40 CFR 262.20 and is signed, carried, and given as required of that person by this section.

(b) The shipper (generator) shall prepare the manifest in accordance with 40 CFR part 262.

(c) The original copy of the manifest must be dated by, and bear the handwritten signature of, the person representing:

(1) The shipper (generator) of the waste at the time it is offered for transportation, and

(2) The initial carrier accepting the waste for transportation.

(d) A copy of the manifest must be dated by, and bear the handwritten signature of the person representing:

(1) Each subsequent carrier accepting the waste for transportation, at the time of acceptance, and

(2) The designated facility receiving the waste, upon receipt.

(e) A copy of the manifest bearing all required dates and signatures must be:

(1) Given to a person representing each carrier accepting the waste for transportation,

(2) Carried during transportation in the same manner as required by this subchapter for shipping papers,

(3) Given to a person representing the designated facility receiving the waste,

(4) Returned to the shipper (generator) by the carrier that transported the waste from the United States to a foreign destination with a notation of the date of departure from the United States, and

(5) Retained by the shipper (generator) and by the initial and each subsequent carrier for three years from the date the waste was accepted by the initial carrier. Each retained copy must bear all required signatures and dates up to and including those entered by the next person who received the waste.

(f) *Transportation by rail.* Notwithstanding the requirements of paragraphs (d) and (e) of this section, the following requirements apply:

(1) When accepting hazardous waste from a non-rail transporter, the initial rail transporter must:

(i) Sign and date the manifest acknowledging acceptance of the hazardous waste;

(ii) Return a signed copy of the manifest to the non-rail transporter;

(iii) Forward at least three copies of the manifest to:

(A) The next non-rail transporter, if any;

(B) The designated facility, if the shipment is delivered to that facility by rail; or

(C) The last rail transporter designated to handle the waste in the United States; and

(iv) Retain one copy of the manifest and rail shipping paper in accordance with 40 CFR 263.22.

(2) Rail transporters must ensure that a shipping paper containing all the information required on the manifest (excluding the EPA identification numbers, generator certification and signatures) and, for exports, an EPA Acknowledgment of Consent accompanies the hazardous waste at all times. Intermediate rail transporters are not required to sign either the manifest or shipping paper.

(3) When delivering hazardous waste to the designated facility, a rail transporter must:

(i) Obtain the date of delivery and handwritten signature of the owner or operator of the designated facility on the manifest or the shipping paper (if the manifest has not been received by the facility); and

(ii) Retain a copy of the manifest or signed shipping paper in accordance with 40 CFR 263.22.

(4) When delivering hazardous waste to a non-rail transporter, a rail transporter must:

(i) Obtain the date of delivery and the handwritten signature of the next non-rail transporter on the manifest; and

(ii) Retain a copy of the manifest in accordance with 40 CFR 263.22.

(5) Before accepting hazardous waste from a rail transporter, a non-rail transporter must sign and date the manifest and provide a copy to the rail transporter.

(g) The person delivering a hazardous waste to an initial rail carrier shall send a copy of the manifest, dated and signed by a representative of the rail carrier, to the person representing the designated facility.

(h) A hazardous waste manifest required by 40 CFR part 262, containing all of the information required by this

subpart, may be used as the shipping paper required by this subpart.

[Amdt. 172–58, 45 FR 34698, May 22, 1980, as amended by Amdt. 172–90, 49 FR 10510, Mar. 20, 1984; 49 FR 11184, Mar. 26, 1984; Amdt. 172–248, 61 FR 28675, June 5, 1996]

Subpart D—Marking

§ 172.300 Applicability.

(a) Each person who offers a hazardous material for transportation shall mark each package, freight container, and transport vehicle containing the hazardous material in the manner required by this subpart.

(b) When assigned the function by this subpart, each carrier that transports a hazardous material shall mark each package, freight container, and transport vehicle containing the hazardous material in the manner required by this subpart.

[Amdt. 172–101, 45 FR 74666, Nov. 10, 1980]

§ 172.301 General marking requirements for non-bulk packagings.

(a) *Proper shipping name and identification number.* (1) Except as otherwise provided by this subchapter, each person who offers for transportation a hazardous material in a non-bulk packaging shall mark the package with the proper shipping name and identification number (preceded by ''UN'' or ''NA'', as appropriate) for the material as shown in the § 172.101 table.

(2) The proper shipping name for a hazardous waste (as defined in § 171.8 of this subchapter) is not required to include the word ''waste'' if the package bears the EPA marking prescribed by 40 CFR 262.32.

(3) *Large quantities of hazardous materials in non-bulk packages.* A transport vehicle or freight container that is loaded at one loading facility with 4,000 kg (8,820 pounds) or more aggregate gross weight of hazardous materials in non-bulk packagings, when all the hazardous materials loaded in the transport vehicle or freight container have the same proper shipping name and identification number, must be marked with the identification number specified for the hazardous material in the § 172.101 Table on each side and each end as specified in §§ 172.332 or 172.336. The requirement in this paragraph (a)(3) does not apply to:

(i) Class 1, Class 7, or ORM–D materials; or

(ii) Limited quantities or small quantities of hazardous materials (see § 173.4 of this subchapter).

(b) *Technica1 names.* In addition to the marking required by paragraph (a) of this section, each non-bulk packaging containing hazardous materials subject to the provisions of § 172.203(k) of this part shall be marked with the technical name in parentheses in association with the proper shipping name in accordance with the requirements and exceptions specified for display of technical descriptions on shipping papers in § 172.203(k) of this part.

(c) *Exemption packagings.* The outside of each package authorized by an exemption shall be plainly and durably marked ''DOT–E'' followed by the exemption number assigned.

(d) *Consignee's or consignor's name and address.* Each person who offers for transportation a hazardous material in a non-bulk package shall mark that package with the name and address of the consignor or consignee except when the package is—

(1) Transported by highway only and will not be transferred from one motor carrier to another; or

(2) Part of a carload lot, truckload lot or freight container load, and the entire contents of the rail car, truck or freight container are shipped from one consignor to one consignee.

(e) *Previously marked packagings.* A package which has been previously marked as required for the material it contains and on which the marking remains legible, need not be remarked. (For empty packagings, see § 173.29 of this subchapter.)

(f) *Marking exceptions.* (1) Identification numbers are not required on packages which contain only limited quantities, as defined in § 171.8 of this subchapter, or ORM–D materials.

(2) The marking of technical names on non-bulk packagings filled for shipment prior to December 31, 1990 is not required until December 31, 1991.

[Amdt. 172–123, 55 FR 52590, Dec. 21, 1990, as amended by Amdt. 172–151, 62 FR 1227, Jan. 8, 1997; 62 FR 39404, July 22, 1997]

EFFECTIVE DATE NOTE: By Amdt 172–151, 62 FR 1227, Jan 8, 1997, in §172.301, paragraph (a)(1) was revised, paragraphs (f)(1) and (f)(2) were removed, and a new paragraph (a)(3) was added, effective Oct. 1, 1997. At 62 FR 39398 and 39404, July 22, 1997, the effective date was delayed until Oct. 1, 1998 and new paragraph (a)(3) was revised effective Oct. 1, 1998. For the convenience of the user the revised text of paragraph (a)(1) is set forth as follows:

§172.301 General marking requirements for non-bulk packagings.

(a) * * *

(1) Except as otherwise provided by this subchapter, each person who offers for transportation a hazardous material in a non-bulk packaging shall mark the package with the proper shipping name and identification number (preceded by ''UN'' or ''NA'', as appropriate) for the material as shown in the §172.101 Table. Identification numbers are not required on packages which contain only limited quantities, as defined in §171.8 of this subchapter, or ORM-D materials.

* * * * *

§172.302 General marking requirements for bulk packagings.

(a) *Identification numbers.* Except as otherwise provided in this subpart, no person may offer for transportation or transport a hazardous material in a bulk packaging unless the packaging is marked as required by §172.332 with the identification number specified for the material in the §172.101 Table—

(1) On each side and each end, if the packaging has a capacity of 3,785 L (1,000 gallons) or more;

(2) On two opposing sides, if the packaging has a capacity of less than 3,785 L (1,000 gallons); or

(3) For cylinders permanently installed on a tube trailer motor vehicle, on each side and each end of the motor vehicle.

(b) *Size of markings.* Except as otherwise provided, markings required by this subpart on bulk packagings must—

(1) Have a width of at least 6.0 mm (0.24 inch) and a height of at least 100 mm (3.9 inches) for rail cars;

(2) Have a width of at least 4.0 mm (0.16 inch) and a height of at least 25 mm (one inch) for portable tanks with capacities of less than 3,785 L (1,000 gallons) and intermediate bulk containers; and

(3) Have a width of at least 6.0 mm (0.24 inch) and a height of at least 50 mm (2.0 inches) for cargo tanks and other bulk packagings.

(c) *Exemption packagings.* The outside of each bulk package used under the terms of an exemption shall be plainly and durably marked ''DOT–E'' followed by the exemption number assigned.

(d) Each bulk packaging marked with a proper shipping name, common name or identification number as required by this subpart must remain marked when it is emptied unless it is—

(1) Sufficiently cleaned of residue and purged of vapors to remove any potential hazard; or

(2) Refilled, with a material requiring different markings or no markings, to such an extent that any residue remaining in the packaging is no longer hazardous.

(e) Additional requirements for marking portable tanks, cargo tanks, tank cars, multi-unit tank car tanks, and other bulk packagings are prescribed in §§172.326, 172.328, 172.330, and 172.331, respectively, of this subpart.

(f) A bulk packaging marked prior to October 1, 1991, in conformance to the regulations of this subchapter in effect on September 30, 1991, need not be remarked if the key words of the proper shipping name are identical to those currently specified in the §172.101 Table. For example, a tank car marked ''ANHYDROUS AMMONIA'' need not be remarked ''ANHYDROUS AMMONIA, LIQUEFIED''.

(g) A rail car, freight container, truck body or trailer in which the lading has been fumigated with any hazardous material, or is undergoing fumigation, must be marked as specified in §173.9 of this subchapter.

[Amdt. 172–123, 55 FR 52591, Dec. 21, 1990, as amended at 56 FR 66254, Dec. 20, 1991; Amdt. 172–150, 61 FR 50624, Sept. 26, 1996; Amdt. 172–151, 62 FR 1228, Jan. 8, 1997; 62 FR 39398, July 22, 1997]

EFFECTIVE DATE NOTE: By Amdt. 172–151, 62 FR 1228, Jan. 8, 1997, §172.302(g) was added effective Oct. 1, 1997. At 62 FR 39398, July 22, 1997, the effective date was delayed until Oct. 1, 1998.

§172.303 Prohibited marking.

(a) No person may offer for transportation or transport a package which is

marked with the proper shipping name or identification number of a hazardous material unless the package contains the identified hazardous material or its residue.

(b) This section does not apply to—

(1) Transportation of a package in a transport vehicle or freight container if the package is not visible during transportation and is loaded by the shipper and unloaded by the shipper or consignee.

(2) Markings on a package which are securely covered in transportation.

(3) The marking of a shipping name on a package when the name describes a material not regulated under this subchapter.

[Amdt. 172–123, 55 FR 52591, Dec. 21, 1990, as amended at 56 FR 66254, Dec. 20, 1991]

§ 172.304 Marking requirements.

(a) The marking required in this subpart—(1) Must be durable, in English and printed on or affixed to the surface of a package or on a label, tag, or sign.

(2) Must be displayed on a background of sharply contrasting color;

(3) Must be unobscured by labels or attachments; and

(4) Must be located away from any other marking (such as advertising) that could substantially reduce its effectiveness.

[Amdt. 172–29, 41 FR 15996, Apr. 15, 1976, as amended by Amdt. 172–29B, 41 FR 57067, Dec. 30, 1976]

§ 172.306 [Reserved]

§ 172.308 Authorized abbreviations.

(a) Abbreviations may not be used in a proper shipping name marking except as authorized in this section.

(b) The abbreviation ''ORM'' may be used in place of the words ''Other Regulated Material.''

(c) Abbreviations which appear as authorized descriptions in Column 2 of the § 172.101 Table (e.g., ''TNT'' and ''PCB'') are authorized.

[Amdt. 172–123, 55 FR 52591, Dec. 21, 1990, as amended by Amdt. 172–145, 60 FR 49110, Sept. 21, 1995]

§ 172.310 Class 7 (radioactive) materials.

In addition to any other markings required by this subpart, each package containing Class 7 (radioactive) materials must be marked as follows:

(a) Each package with a gross mass greater than 50 kilograms (110 pounds) must have the its gross mass marked on the outside of the package.

(b) Each packaging must be marked on the outside of the package, in letters at least 13 mm (0.5 inch) high, with the words ''TYPE A'' or ''TYPE B'' as appropriate. A packaging which does not conform to Type A or Type B requirements may not be so marked.

(c) Each Type B, Type B(U) or Type B(M) packaging must be marked on the outside of the package with a radiation symbol that conforms to the requirements of Appendix B to Part 172.

(d) Each package destined for export shipment must also be marked ''USA'' in conjunction with the specification marking, or other package certificate identification. (See §§ 173.471, 173.472, and 173.473 of this subchapter).

[Amdt 172–143, 60 FR 50304, Sept. 28, 1995, as amended by 172–143, 61 FR 20749, May 8, 1996]

§ 172.312 Liquid hazardous materials in non-bulk packagings.

(a) Except as provided in this section, each non-bulk combination package having inner packagings containing liquid hazardous materials must be:

(1) Packed with closures upward, and

(2) Legibly marked, with package orientation markings that conform pictorially to ISO Standard 780–1985, on two opposite vertical sides of the package with the arrows pointing in the correct upright direction. Depicting a rectangular border around the arrows is optional.

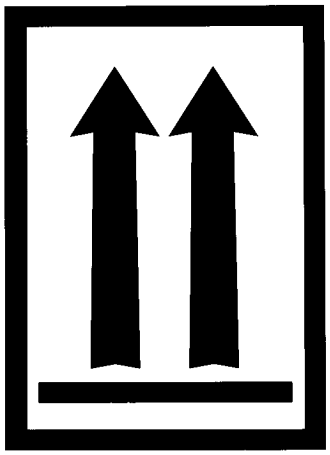

Package orientation

(b) Arrows for purposes other than indicating proper package orientation may not be displayed on a package containing a liquid hazardous material.

(c) The requirements of paragraph (a) of this section do not apply to—

(1) A non-bulk package with inner packagings which are cylinders.

(2) Except when offered or intended for transportation by aircraft, packages containing flammable liquids in inner packagings of one liter or less prepared in accordance with §173.150 (b) or (c) of this subchapter.

(3) When offered or intended for transportation by aircraft, packages containing flammable liquids in inner packagings of 120 ml (4 fluid oz.) or less prepared in accordance with §173.150 (b) or (c) of this subchapter when packed with sufficient absorption material between the inner and outer packagings to completely absorb the liquid contents.

(4) Liquids contained in manufactured articles (e.g., alcohol or mercury in thermometers) which are leak-tight in all orientations.

(5) A non-bulk package with hermetically-sealed inner packagings.

[Amdt. 172–123, 55 FR 52591, Dec. 21, 1990, as amended at 56 FR 66254, Dec. 20, 1991; 57 FR 45458, Oct. 1, 1992]

§172.313 Poisonous hazardous materials.

In addition to any other markings required by this subpart:

(a) For materials poisonous by inhalation (see §171.8 of this subchapter), the package shall be marked ''Inhalation Hazard'' in association with the required labels or placards, as appropriate, or shipping name, when required. (See §172.302(b) of this subpart for size of markings on bulk packages.) Bulk packagings must be marked on two opposing sides.

(b) Each non-bulk plastic outer packaging used as a single or composite packaging for materials meeting the definition of Division 6.1 (in §173.132 of this subchapter) shall be permanently marked, by embossment or other durable means, with the word ''POISON'' in letters at least 6.3 mm (0.25 inch) in height. Additional text or symbols related to hazard warning may be included in the marking. The marking shall be located within 150 mm (6 inches) of the closure of the packaging.

(c) A transport vehicle or freight container loaded at one loading facility with more than 1,000 kg (2,205 pounds) aggregate gross weight of non-bulk packages containing materials poisonous by inhalation in Hazard Zone A and B having the same proper shipping name and identification number shall be marked as required by §172.332 with the identification number specified for the material, in the §172.101 Table, on each side and each end of the transport vehicle or freight container.

[Amdt. 172–123, 55 FR 52592, Dec. 21, 1990, as amended at 57 FR 46624, Oct. 9, 1992; Amdt. 172–151, 62 FR 1228, Jan. 8, 1997; 62 FR 39398, 39405, July 22, 1997]

EFFECTIVE DATE NOTE: By Amdt. 172–151, 62 FR 1228, Jan. 8, 1997, §172.313 was amended by revising paragraph (a) and adding paragraph (c), effective Oct. 1, 1997. At 62 FR 39398 and 39405, July 22, 1997, the effective date was delayed until to Oct. 1, 1998, and §172.313 was further amended by adding an introductory text and by revising paragraphs (a) and (c), effective Oct. 1, 1998. For the convenience of the user the revised text of paragraph (a) is set forth as follows:

§172.313 Poisonous hazardous materials.

(a) A material poisonous by inhalation (see §171.8 of this subchapter) shall be marked ''Inhalation Hazard'' in association with the

required labels or placards, as appropriate, and shipping name when required. The marking must be on two opposing sides of a bulk packaging. (See § 172.302(b) of this subpart for size of markings on bulk packages.) When the words ''Inhalation Hazard'' appear on the label, as prescribed in §§ 172.416 and 172.429, or placard, as prescribed in §§ 172.540 and 172.555, the ''Inhalation Hazard'' marking is not required on the package.

* * * * *

§ 172.316 Packagings containing materials classed as ORM–D.

(a) Each non-bulk packaging containing a material classed as ORM–D must be marked on at least one side or end with the ORM–D designation immediately following or below the proper shipping name of the material. The ORM designation must be placed within a rectangle that is approximately 6.3 mm (0.25 inches) larger on each side than the designation. The designation for ORM–D must be:

(1) ORM–D–AIR for an ORM–D that is prepared for air shipment and packaged in accordance with the provisions of § 173.27 of this subchapter.

(2) ORM–D for an ORM–D other than as described in paragraph (a)(1) of this section.

(b) When the ORM–D marking including the proper shipping name can not be affixed on the package surface, it may be on an attached tag.

(c) The marking ORM–D is the certification by the person offering the packaging for transportation that the material is properly described, classed, packaged, marked and labeled (when appropriate) and in proper condition for transportation according to the applicable regulations of this subchapter. This form of certification does not preclude the requirement for a certificate on a shipping paper when required by subpart C of this part.

[Amdt. 172–29, 41 FR 15996, Apr. 15, 1976, as amended by Amdt. 172–123, 55 FR 52592, Dec. 21, 1990; 56 FR 66254, Dec. 20, 1991]

§ 172.320 Explosive hazardous materials.

(a) Except as otherwise provided in paragraphs (b), (c), (d) and (e) of this section, each package containing a Class 1 material must be marked with the EX-number for each substance, article or device contained therein.

(b) Except for fireworks approved in accordance with § 173.56(j) of this subchapter, a package of Class 1 materials may be marked, in lieu of the EX-number required by paragraph (a) of this section, with a national stock number issued by the Department of Defense or identifying information, such as a product code required by regulations for commercial explosives specified in 27 CFR part 55, if the national stock number or identifying information can be specifically associated with the EX-number assigned.

(c) When more than five different Class 1 materials are packed in the same package, the package may be marked with only five of the EX-numbers, national stock numbers, product codes, or combination thereof.

(d) The requirements of this section do not apply if the EX-number, product code or national stock number of each explosive item described under a proper shipping description is shown in association with the shipping description required by § 172.202(a) of this part. Product codes and national stock numbers must be traceable to the specific EX-number assigned by the Associate Administrator for Hazardous Materials Safety.

(e) The requirements of this section do not apply to the following Class 1 materials:

(1) Those being shipped to a testing agency in accordance with § 173.56(d) of this subchapter;

(2) Those being shipped in accordance with § 173.56(e) of this subchapter, for the purposes of developmental testing;

(3) Those which meet the requirements of § 173.56(h) of this subchapter and therefore are not subject to the approval process of § 173.56 of this subchapter;

(4) Until October 1, 1993, those which are shipped under § 171.19 of this subchapter; and

(5) Those that are transported in accordance with § 173.56(c)(2) of this subchapter and, therefore, are covered by a national security classification currently in effect.

[Amdt. 172–123, 56 FR 66254, Dec. 20, 1991, as amended by Amdt. 172–139, 59 FR 67487, Dec. 29, 1994]

§172.322 Marine pollutants.

(a) For vessel transportation of each non-bulk packaging that contains a marine pollutant—

(1) If the proper shipping name for a material which is a marine pollutant does not identify by name the component which makes the material a marine pollutant, the name of that component must be marked on the package in parentheses in association with the marked proper shipping name. Where two or more components which make a material a marine pollutant are present, the names of at least two of the components most predominantly contributing to the marine pollutant designation must appear in parentheses in association with the marked proper shipping name; and

(2) The MARINE POLLUTANT mark shall be placed in association with the hazard warning labels required by Subpart E of this Part or, in the absence of any labels, in association with the marked proper shipping name.

(b) A bulk packaging that contains a marine pollutant must—

(1) Be marked with the MARINE POLLUTANT mark on at least two opposing sides or two ends other than the bottom if the packaging has a capacity of less than 3,785 L (1,000 gallons). The mark must be visible from the direction it faces. The mark may be displayed in black lettering on a square-on-point configuration having the same outside dimensions as a placard; or

(2) Be marked on each end and each side with the MARINE POLLUTANT mark if the packaging has a capacity of 3,785 L (1,000 gallons) or more. The mark must be visible from the direction it faces. The mark may be displayed in black lettering on a square-on-point configuration having the same outside dimensions as a placard.

(c) A transport vehicle or freight container that contains a package subject to the marking requirements of paragraph (a) or (b) of this section must be marked with the MARINE POLLUTANT mark. The mark must appear on each side and each end of the transport vehicle or freight container, and must be visible from the direction it faces. This requirement may be met by the marking displayed on a freight container or portable tank loaded on a motor vehicle or rail car. This mark may be displayed in black lettering on a white square-on-point configuration having the same outside dimensions as a placard.

(d) The MARINE POLLUTANT mark is not required—

(1) On a combination package containing a severe marine pollutant (see appendix B to §172.101), in inner packagings each of which contains:

(i) 0.5 liters (17 ounces) or less net capacity for liquids; or

(ii) 500 grams (17.6 ounces) or less net capacity for solids.

(2) On a combination packaging containing a marine pollutant, other than a severe marine pollutant, in inner packagings each of which contains:

(i) 5 liters (1.3 gallons) or less net capacity for liquids; or

(ii) 5 kilograms (11 pounds) or less net capacity for solids.

(3) Except for transportation by vessel, on a bulk packaging, freight container or transport vehicle that bears a label or placard specified in Subparts E or F of this part.

(e) *MARINE POLLUTANT mark.* The MARINE POLLUTANT mark must conform to the following:

(1) Except for size, the MARINE POLLUTANT mark must appear as follows:

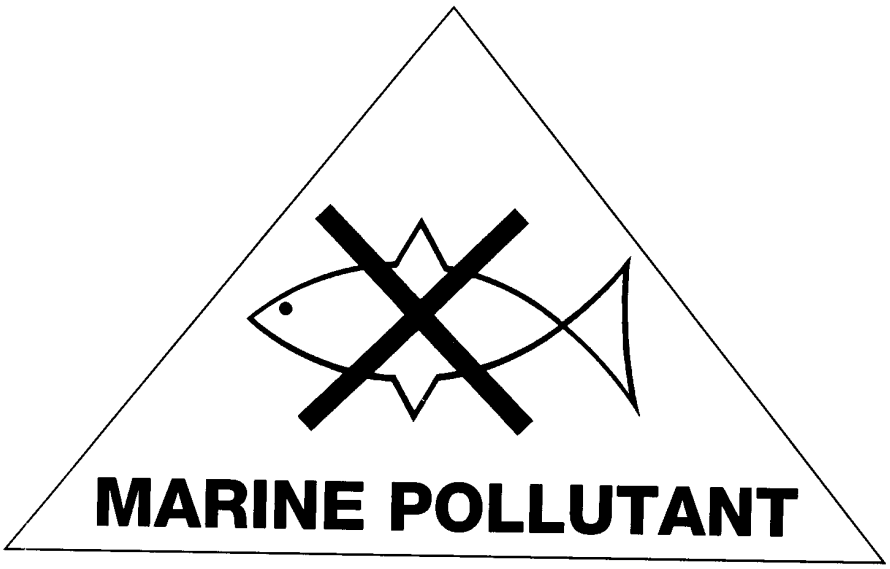

(2) The symbol, letters and border must be black and the background white, or the symbol, letters, border and background must be of contrasting color to the surface to which the mark is affixed. Each side of the mark must be—

(i) At least 100 mm (3.9 inches) for marks applied to:

(A) Non-bulk packagings, except in the case of packagings which, because of their size, can only bear smaller marks; or

(B) Bulk packagings with a capacity of less than 3785 L (1,000 gallons); or

(ii) At least 250 mm (9.8 inches) for marks applied to all other bulk packagings.

[Amdt. 172–127, 57 FR 52938, Nov. 5, 1992, as amended by Amdt. 172–136, 59 FR 38064, July 26, 1994; Amdt. 172–145, 60 FR 49110, Sept. 21, 1995]

§ 172.324 Hazardous substances in non-bulk packagings.

For each non-bulk package that contains a hazardous substance—

(a) Except for packages of radioactive material labeled in accordance with § 172.403, if the proper shipping name of a material that is a hazardous substance does not identify the hazardous substance by name, the name of the hazardous substance must be marked on the package, in parentheses, in association with the proper shipping name. If the material contains two or more hazardous substances, at least two hazardous substances, including the two with the lowest reportable quantities (RQs), must be identified. For a hazardous waste, the waste code (e.g., D001), if appropriate, may be used to identify the hazardous substance.

(b) The letters ''RQ'' shall be marked on the package in association with the proper shipping name.

[Amdt. 172–108, 52 FR 4843, Feb. 17, 1987, as amended by Amdt. 172–119, 54 FR 39505, Sept. 26, 1989; Amdt. 172–122, 55 FR 46825, Nov. 7, 1990; Amdt. 172–123, 55 FR 52592, Dec. 21, 1990; Amdt. 172–127, 57 FR 52939, Nov. 5, 1992; Amdt. 172–149, 61 FR 27172, May 30, 1996]

§ 172.325 Elevated temperature materials.

(a) Except as provided in paragraph (b) of this section, a bulk packaging containing an elevated temperature material must be marked on two opposing sides with the word ''HOT'' in black or white Gothic lettering on a contrasting background. The marking

must be displayed on the packaging itself or in black lettering on a plain white square-on-point configuration having the same outside dimensions as a placard. (See §172.302(b) for size of markings on bulk packagings.)

(b) Bulk packagings containing molten aluminum or molten sulfur must be marked ''MOLTEN ALUMINUM'' or ''MOLTEN SULFUR'', respectively, in the same manner as prescribed in paragraph (a) of this section.

(c) If the identification number is displayed on a white-square-on-point display configuration, as prescribed in §172.336(b), the word ''HOT'' may be displayed in the upper corner of the same white-square-on-point display configuration. The word ''HOT'' must be in black letters having a height of at least 50 mm (2.0 inches). Except for size, these markings shall be as illustrated for an Elevated temperature material, liquid, n.o.s.:

[Amdt. 172–125, 58 FR 3348, Jan. 8, 1993, as amended by Amdt. 172–139, 59 FR 67487, Dec. 29, 1994]

§172.326 Portable tanks.

(a) *Shipping name.* No person may offer for transportation or transport a portable tank containing a hazardous material unless it is legibly marked on two opposing sides with the proper shipping name specified for the material in the §172.101 Table.

(b) *Owner's name.* The name of the owner or of the lessee, if applicable, must be displayed on a portable tank that contains a hazardous material.

(c) *Identification numbers.* (1) If the identification number markings required by §172.302(a) are not visible, a transport vehicle or freight container used to transport a portable tank containing a hazardous material must be marked on each side and each end as required by §172.332 with the identification number specified for the material in the §172.101 Table.

(2) Each person who offers a portable tank containing a hazardous material to a motor carrier, for transportation in a transport vehicle or freight container, shall provide the motor carrier with the required identification numbers on placards, orange panels, or the white square-on-point configuration, as appropriate, for each side and each end of the transport vehicle or freight container from which identification numbers on the portable tank are not visible.

[Amdt. 172–123, 55 FR 52592, Dec. 21, 1990, as amended at 56 FR 66255, Dec. 20, 1991]

§172.328 Cargo tanks.

(a) *Providing and affixing identification numbers.* Unless a cargo tank is already marked with the identification numbers required by this subpart, the identification numbers must be provided or affixed as follows:

(1) A person who offers a hazardous material to a motor carrier for transportation in a cargo tank shall provide the motor carrier the identification numbers on placards or shall affix orange panels containing the required identification numbers, prior to or at the time the material is offered for transportation.

(2) A person who offers a cargo tank containing a hazardous material for transportation shall affix the required identification numbers on panels or placards prior to or at the time the cargo tank is offered for transportation.

(3) For a cargo tank transported on or in a transport vehicle or freight container, if the identification number marking on the cargo tank required by §172.302(a) would not normally be visible during transportation—

(i) The transport vehicle or freight container must be marked as required by §172.332 on each side and each end with the identification number specified for the material in the §172.101 Table; and

(ii) When the cargo tank is permanently installed within an enclosed cargo body of the transport vehicle or freight container, the identification number marking required by §172.302(a) need only be displayed on each side and end of a cargo tank that is visible when the cargo tank is accessed.

(b) *Required markings: Gases.* Except for certain nurse tanks which must be marked as specified in §173.315(m) of this subchapter, each cargo tank transporting a Class 2 material subject to this subchapter must be marked, in lettering no less than 50 mm (2.0 inches), on each side and each end with—

(1) The proper shipping name specified for the gas in the §172.101 Table; or

(2) An appropriate common name for the material (e.g., ''Refrigerant Gas'').

(c) *QT/NQT markings.* Each MC 330 and MC 331 cargo tank must be marked near the specification plate, in letters no less than 50 mm (2.0 inches) in height, with—

(1) ''QT'', if the cargo tank is constructed of quenched and tempered steel; or

(2) ''NQT'', if the cargo tank is constructed of other than quenched and tempered steel.

[Amdt. 172–123, 55 FR 52592, Dec. 21, 1990, as amended at 56 FR 66255, Dec. 20, 1991; Amdt. 172–151, 62 FR 1228, Jan. 8, 1997; 62 FR 39045, July 22, 1997]

EFFECTIVE DATE NOTE: At 62 FR, 39405, July 22, 1997, §172.328 (a)(3), as added by Amdt. 172–151, 62 FR 1228 Jan. 8, 1997, effective Oct. 1, 1998, was revised, effective Oct. 1, 1998.

§ 172.330 Tank cars and multi-unit tank car tanks.

(a) *Shipping name and identification number.* No person may offer for transportation or transport a hazardous material—

(1) In a tank car unless the following conditions are met:

(i) The tank car must be marked on each side and each end as required by § 172.302 with the identification number specified for the material in the § 172.101 Table; and

(ii) A tank car containing any of the following materials must be marked on each side with the key words of the proper shipping name specified for the material in the § 172.101 Table, or with a common name authorized for the material in this subchapter (e.g., ''Refrigerant Gas''):

Acrolein, inhibited
Ammonia, anhydrous, liquefied
Ammonia solutions (more than 50% ammonia)
Bromine *or* Bromine solutions
Bromine chloride
Chloroprene, inhibited
Dispersant gas *or* Refrigerant gas (as defined in § 173.115 of this subchapter)
Division 2.1 materials
Division 2.2 materials (in Class DOT 107 tank cars only)
Division 2.3 materials
Formic acid
Hydrocyanic acid, aqueous solutions
Hydrofluoric acid, solution
Hydrogen cyanide, stabilized (less than 3% water)
Hydrogen fluoride, anhydrous
Hydrogen peroxide, aqueous solutions (greater than 20% hydrogen peroxide)
Hydrogen peroxide, stabilized
Hydrogen peroxide and peroxyacetic acid mixtures
Nitric acid (other than red fuming)
Phosphorus, amorphous
Phosphorus, white dry *or* Phosphorus, white, under water *or* Phosphorus white, in solution, *or* Phosphorus, yellow dry or Phosphorus, yellow, under water *or* Phosphorus, yellow, in solution
Phosphorus white, molten
Potassium nitrate and sodium nitrate mixtures
Potassium permanganate
Sulfur trioxide, inhibited
Sulfur trioxide, uninhibited

(2) In a multi-unit tank car tank, unless the tank is marked on two opposing sides, in letters and numerals no less than 50 mm (2.0 inches) high—

(i) With the proper shipping name specified for the material in the § 172.101 Table or with a common name authorized for the material in this subchapter (e.g., ''Refrigerant Gas''); and

(ii) With the identification number specified for the material in the § 172.101 Table, unless marked in accordance with §§ 172.302(a) and 172.332 of this subpart.

(b) A motor vehicle or rail car used to transport a multi-unit tank car tank containing a hazardous material must be marked on each side and each end, as required by § 172.332, with the identification number specified for the material in the § 172.101 Table.

[Amdt. 172–123, 55 FR 52593, Dec. 21, 1990, as amended at 56 FR 66255, Dec. 20, 1991; 57 FR 45458, Oct. 1, 1992; Amdt. 172–148, 61 FR 28676, June 5, 1996; Amdt. 172–148, 61 FR 50254, Sept. 25, 1996]

§ 172.331 Bulk packagings other than portable tanks, cargo tanks, tank cars and multi-unit tank car tanks.

(a) Each person who offers a hazardous material to a motor carrier for transportation in a bulk packaging shall provide the motor carrier with the required identification numbers on placards or plain white square-on-point display configurations, as authorized, or shall affix orange panels containing the required identification numbers to the packaging prior to or at the time the material is offered for transportation, unless the packaging is already marked with the identification number as required by this subchapter.

(b) Each person who offers a bulk packaging containing a hazardous material for transportation shall affix to the packaging the required identification numbers on orange panels, square-on-point configurations or placards, as appropriate, prior to, or at the time the packaging is offered for transportation unless it is already marked with identification numbers as required by this subchapter.

(c) For a bulk packaging contained in or on a transport vehicle or freight container, if the identification number marking on the bulk packaging (e.g., an IBC) required by § 172.302(a) is not visible, the transport vehicle or freight container must be marked as required by § 172.332 on each side and each end

with the identification number specified for the material in the §172.101 Table.

[Amdt. 172–123, 55 FR 52593, Dec. 21, 1994, as amended by Amdt. 172–151, 62 FR 1228, Jan. 8, 1997; 62 FR 39398, July 22, 1997]

EFFECTIVE DATE NOTE: By Amdt. 172–151, 62 FR 1228, Jan. 8, 1997, §172.302(c) was added effective Oct. 1, 1997. At 62 FR 39398, July 22, 1997, the effective date was delayed until Oct. 1, 1998.

§172.332 Identification number markings.

(a) *General.* When required by §§172.302, 172.326, 172.328, 172.330, or §172.331 of this subpart, identification numbers shall be displayed on orange panels or placards as specified in this section or, when appropriate, on white square-on-point configurations as prescribed in §172.336(b).

(b) *Orange panels.* Display of an identification number on an orange panel shall be in conformance with the following:

(1) The orange panel must be 160 mm (6.3 inches) high by 400 mm (15.7 inches) wide with a 15 mm (0.6 inches) black outer border. The identification number shall be displayed in 100 mm (3.9 inches) black Helvetica Medium numerals on the orange panel. Measurements may vary from those specified plus or minus 5 mm (0.2 inches).

(2) The orange panel may be made of any durable material prescribed for placards in §172.519, and shall be of the orange color specified for labels or placards in appendix A to this part.

(3) The name and hazard class of a material may be shown in the upper left border of the orange panel in letters not more than 18 points high.

(4) Except for size and color, the orange panel and identification numbers shall be as illustrated for Liquefied petroleum gas:

(c) *Placards.* Display of an identification number on a hazard warning placard shall be in conformance with the following:

(1) The identification number shall be displayed across the center area of the placard in 88 mm (3.5 inches) black Alpine Gothic or Alternate Gothic No. 3 numerals on a white background 100 mm (3.9 inches) high and approximately 215 mm (8.5 inches) wide and may be outlined with a solid or dotted line border.

(2) The top of the 100 mm (3.9 inches) high white background shall be approximately 40 mm (1.6 inches) above the placard horizontal center line.

(3) An identification number may be displayed only on a placard corresponding to the primary hazard class of the hazardous material.

(4) For a COMBUSTIBLE placard used to display an identification number, the entire background below the white background for the identification number must be white during transportation by rail and may be white during transportation by highway.

(5) The name of the hazardous material and the hazard class may be shown in letters not more than 18 points high immediately within the upper border of the space on the placard bearing the identification number of the material.

(6) If an identification number is placed over the word(s) on a placard, the word(s) should be substantially covered to maximize the effectiveness of the identification number.

(d) Except for size and color, the display of an identification number on a

placard shall be as illustrated for Acetone:

[Amdt. 172–101, 45 FR 74667, Nov. 10, 1980, as amended by Amdt. 172–81, 48 FR 28099, June 20, 1983; Amdt. 172–110, 52 FR 29527, Aug. 10, 1987; Amdt. 172–123, 55 FR 52593, Dec. 21, 1990; 56 FR 66255, Dec. 20, 1991]

EFFECTIVE DATE NOTE: By Amdt. 172–151, 62 FR 1228, Jan. 8, 1997, § 172.332(a) was revised. At 62 FR 39398, July 22, 1997 the effective date was delayed until Oct. 1, 1998. For the convenience of the user the revised text is set forth as follows:

§ 172.332 Identification number markings.

(a) *General.* When required by §§ 172.301, 172.302, 172.313, 172.326, 172.328, 172.330, or 172.331 of this subpart, identification numbers must be displayed on orange panels or placards as specified in this section or, when appropriate, on plain white square-on-point configurations as prescribed in § 172.336(b).

* * * * *

§ 172.334 Identification numbers; prohibited display.

(a) No person may display an identification number on a RADIOACTIVE, EXPLOSIVES 1.1, 1.2, 1.3, 1.4, 1.5 or 1.6, DANGEROUS, or subsidiary hazard placard.

(b) No person may display an identification number on a placard, orange panel or white square-on-point display configuration unless—

(1) The identification number is specified for the material in § 172.101;

(2) The identification number is displayed on the placard, orange panel or white square-on-point configuration authorized by § 172.332 or § 172.336(b), as appropriate, and any placard used for display of the identification number corresponds to the hazard class of the material specified in § 172.504;

(3) Except as provided under § 172.336 (c)(4) or (c)(5), the package, freight container, or transport vehicle on which the number is displayed contains the hazardous material associated with that identification number in § 172.101.

(c) Except as required by § 172.332(c)(4) for a combustible liquid, the identification number of a material may be displayed only on the placards required by the tables in § 172.504.

(d) Except as provided in § 172.336, a placard bearing an identification number may not be used to meet the requirements of subpart F of this part unless it is the correct identification number for all hazardous materials of the same class in the transport vehicle or freight container on which it is displayed.

(e) Except as specified in § 172.338, an identification number may not be displayed on an orange panel on a cargo tank unless affixed to the cargo tank by the person offering the hazardous material for transportation in the cargo tank.

(f) If a placard is required by § 172.504, an identification number may not be displayed on an orange panel unless it is displayed in proximity to the placard.

(g) No person shall add any color, number, letter, symbol, or word other than as specified in this subchapter, to any identification number marking display which is required or authorized by this subchapter.

[Amdt. 172–101, 45 FR 74667, Nov. 10, 1980, as amended by Amdt. 172–104, 51 FR 23078, June 25, 1986; Amdt. 172–110, 52 FR 29528, Aug. 10, 1987; Amdt. 172–123, 55 FR 52593, Dec. 21, 1990; 56 FR 66255, Dec. 20, 1991; Amdt. 172–127, 59 FR 49133, Sept. 26, 1994]

§ 172.336 Identification numbers; special provisions.

(a) When not required or prohibited by this subpart, identification numbers may be displayed on a transport vehicle or a freight container in the manner prescribed by this subpart.

(b) For hazardous materials in hazard classes for which hazard warning placards are not specified, identification numbers, when required, must be displayed on either orange panels (see

§172.332(b)) or on a plain white square-on-point display configuration having the same outside dimensions as a placard. In addition, for materials in hazard classes for which placards are specified and identification number displays are required, but for which identification numbers may not be displayed on the placards authorized for the material (see §172.334(a)), identification numbers must be displayed on orange panels or on the plain white square-on-point display configuration in association with the required placards. An identification number displayed on a white square-on-point display configuration is not considered to be a placard.

(1) The 100 mm (3.9 inch) by 215 mm (8.5 inches) area containing the identification number shall be located as prescribed by §172.332 (c)(1) and (c)(2) and may be outlined with a solid or dotted line border.

(2) [Reserved]

(c) Identification numbers are not required:

(1) On the ends of a portable tank, cargo tank or tank car having more than one compartment if hazardous materials having different identification numbers are being transported therein. In such a circumstance, the identification numbers on the sides of the tank shall be displayed in the same sequence as the compartments containing the materials they identify.

(2) On a cargo tank containing only gasoline, if the cargo tank is marked ''Gasoline'' on each side and rear in letters no less than 50 mm (2 inches) high, or is placarded in accordance with §172.542(c).

(3) On a cargo tank containing only fuel oil, if the cargo tank is marked ''Fuel Oil'' on each side and rear in letters no less than 50 mm (2 inches) high, or is placarded in accordance with §172.544(c).

(4) For each of the different liquid petroleum distillate fuels, including gasoline and gasohol in a compartmented cargo tank or tank car, if the identification number is displayed for the distillate fuel having the lowest flash point.

(5) For each of the different liquid petroleum distillate fuels, including gasoline and gasohol transported in a cargo tank, if the identification number is displayed for the liquid petroleum distillate fuel having the lowest flash point.

(6) On nurse tanks meeting the provisions of §173.315(m) of this subchapter.

[Amdt. 172–101, 45 FR 74667, Nov. 10, 1980, as amended by Amdt. 172–74, 47 FR 40365, Sept. 30, 1982; Amdt. 172–109, 52 FR 13038, Apr. 20, 1987; Amdt. 172–110, 52 FR 29528, Aug. 10, 1987; Amdt. 172–123, 55 FR 52593, Dec. 21, 1990; 56 FR 66255, Dec. 20, 1991]

§172.338 Replacement of identification numbers.

If more than one of the identification number markings on placards, orange panels, or white square-on-point display configurations that are required to be displayed are lost, damaged or destroyed during transportation, the carrier shall replace all the missing or damaged identification numbers as soon as practicable. However, in such a case, the numbers may be entered by hand on the appropriate placard, orange panel or white square-on-point display configuration providing the correct identification numbers are entered legibly using an indelible marking material. When entered by hand, the identification numbers must be located in the white display area specified in §172.332. This section does not preclude required compliance with the placarding requirements of subpart F of this subchapter.

[Amdt. 172–110, 52 FR 29528, Aug. 10, 1987]

Subpart E—Labeling

§172.400 General labeling requirements.

(a) Except as specified in §172.400a, each person who offers for transportation or transports a hazardous material in any of the following packages or containment devices, shall label the package or containment device with labels specified for the material in the §172.101 Table and in this subpart:

(1) A non-bulk package;

(2) A bulk packaging, other than a cargo tank, portable tank, or tank car, with a volumetric capacity of less than 18 m^3 (640 cubic feet), unless placarded in accordance with subpart F of this part;

(3) A portable tank of less than 3785 L (1000 gallons) capacity, unless placarded in accordance with subpart F of this part;

(4) A DOT Specification 106 or 110 multi-unit tank car tank, unless placarded in accordance with subpart F of this part; and

(5) An overpack, freight container or unit load device, of less than 18 m^3 (640 cubic feet), which contains a package for which labels are required, unless placarded or marked in accordance with § 172.512 of this part.

(b) Labeling is required for a hazardous material which meets one or more hazard class definitions, in accordance with Column 6 of the § 172.101 Table and the following table:

Hazard class or division	Label name	Label design or section reference (§)
1.1	EXPLOSIVE 1.1	172.411
1.2	EXPLOSIVE 1.2	172.411
1.3	EXPLOSIVE 1.3	172.411
1.4	EXPLOSIVE 1.4	172.411
1.5	EXPLOSIVE 1.5	172.411
1.6	EXPLOSIVE 1.6	172.411
2.1	FLAMMABLE GAS	172.417
2.2	NON-FLAMMABLE GAS.	172.415
2.3	POISON GAS	172.416
3 (flammable liquid) Combustible liquid	FLAMMABLE LIQUID (none)	172.419
4.1	FLAMMABLE SOLID	172.420
4.2	SPONTANEOUSLY COMBUSTIBLE.	172.422
4.3	DANGEROUS WHEN WET.	172.423
5.1	OXIDIZER	172.426
5.2	ORGANIC PEROXIDE.	172.427
6.1 (Packing Groups I and II).	POISON.	172.430
6.1 (Packing Group III).	KEEP AWAY FROM FOOD.	172.431
6.2	INFECTIOUS SUBSTANCE [1].	172.432
7 (see § 172.403)	RADIOACTIVE WHITE–I.	172.436
7	RADIOACTIVE YELLOW–II.	172.438
7	RADIOACTIVE YELLOW–III.	172.440
7 (empty packages, see § 173.427).	EMPTY	172.450
8	CORROSIVE	172.442
9	CLASS 9	172.446

[1] The ETIOLOGIC AGENT label specified in regulations of the Department of Health and Human Services at 42 CFR 72.3 may apply to packages of infectious substances.

[Amdt. 172–123, 55 FR 52593, Dec. 21, 1990, as amended at 56 FR 66255, Dec. 20, 1991]

EFFECTIVE DATE NOTE: At 62 FR 39405, July 22, 1997, in § 172.400(b), the table, as revised by Amdt. 172–151, 62 FR 1228, Jan. 8, 1997 effective Oct. 1, 1998, was amended by revising the entries for Division 6.1 materials, effective Oct. 1, 1998. For the convenience of the user the revised text is set forth as follows:

§ 172.400 General labeling requirements.

* * * * *

(b) * * *

Hazard class or division	Label name	Label design or section reference
1.1	EXPLOSIVES 1.1	172.411
1.2	EXPLOSIVES 1.2	172.411
1.3	EXPLOSIVES 1.3	172.411
1.4	EXPLOSIVES 1.4	172.411
1.5	EXPLOSIVES 1.5	172.411
1.6	EXPLOSIVES 1.6	172.411
2.1	FLAMMABLE GAS	172.417
2.2	NONFLAMMABLE GAS	172.415
2.3	POISON GAS	172.416
3 (flammable liquid) Combustible liquid	FLAMMABLE LIQUID (none)	172.419
4.1	FLAMMABLE SOLID	172.420
4.2	SPONTANEOUSLY COMBUSTIBLE	172.422
4.3	DANGEROUS WHEN WET	172.423
5.1	OXIDIZER	172.426
5.2	ORGANIC PEROXIDE	172.427
6.1 (inhalation hazard, Zone A or B)	POISON INHALATION HAZARD	172.429
6.1 (PG I or II, other than Zone A or B inhalation hazard).	POISON	172.430
6.1 (PG III)	KEEP AWAY FROM FOOD	172.431
6.2	INFECTIOUS SUBSTANCE [1]	172.432
7 (see § 172.403)	RADIOACTIVE WHITE-I	172.436
7	RADIOACTIVE YELLOW–II	172.438

Hazard class or division	Label name	Label design or section reference
7	RADIOACTIVE YELLOW–III	172.440
7 (empty packages, see § 173.427)	EMPTY	172.450
8	CORROSIVE	172.442
9	CLASS 9	172.446

[1] The ETIOLOGIC AGENT label specified in regulations of the Department of Health and Human Services at 42 CFR 72.3 may apply to packages of infectious substances.

§ 172.400a Exceptions from labeling.

(a) Notwithstanding the provisions of § 172.400, a label is not required on—

(1) A cylinder, or a Dewar flask conforming to § 173.320 of this subchapter containing a Division 2.1 or Division 2.2 gas that is—

(i) Not poisonous;

(ii) Carried by a private or contract motor carrier;

(iii) Not overpacked; and

(iv) Durably and legibly marked in accordance with CGA Pamphlet C–7, appendix A.

(2) A package or unit of military explosives (including ammunition) shipped by or on behalf of the DOD when in—

(i) Freight containerload, carload or truckload shipments, if loaded and unloaded by the shipper or DOD; or

(ii) Unitized or palletized break-bulk shipments by cargo vessel under charter to DOD if at least one required label is displayed on each unitized or palletized load.

(3) A package containing a hazardous material other than ammunition that is—

(i) Loaded and unloaded under the supervision of DOD personnel, and

(ii) Escorted by DOD personnel in a separate vehicle.

(4) A compressed gas cylinder permanently mounted in or on a transport vehicle.

(5) A freight container, aircraft unit load device or portable tank, which—

(i) Is placarded in accordance with subpart F of this part, or

(ii) Conforms to paragraph (a)(3) or (b)(3) of § 172.512.

(6) An overpack or unit load device in or on which labels representative of each hazardous material in the overpack or unit load device are visible.

(7) A package of low specific activity radioactive material, when transported under § 173.425(b) of this subchapter.

(b) Certain exceptions to labeling requirements are provided for small quantities and limited quantities in applicable sections in part 173 of this subchapter.

(c) Notwithstanding the provisions of § 172.402(a), a subsidiary hazard label is not required on a package containing a Class 8 (corrosive) material which has a subsidiary hazard of Division 6.1 (poisonous) if the toxicity of the material is based solely on the corrosive destruction of tissue rather than systemic poisoning.

(d) For Division 6.1 Packing Group III materials, a POISON label may be used in place of a KEEP AWAY FROM FOOD label.

[Amdt. 172–123, 55 FR 52594, Dec. 21, 1990, as amended by Amdt. 172–132, 58 FR 50501, Sept. 27, 1993; 172–130, 58 FR 51531, Oct. 1, 1993; Amdt. 172–139, 59 FR 67490, Dec. 29, 1994; Amdt. 172–145, 60 FR 49110, Sept. 21, 1995]

§ 172.401 Prohibited labeling.

(a) Except as otherwise provided in this section, no person may offer for transportation and no carrier may transport a package bearing a label specified in this subpart unless:

(1) The package contains a material that is a hazardous material, and

(2) The label represents a hazard of the hazardous material in the package.

(b) No person may offer for transportation and no carrier may transport a package bearing any marking or label which by its color, design, or shape could be confused with or conflict with a label prescribed by this part.

(c) The restrictions in paragraphs (a) and (b) of this section, do not apply to packages labeled in conformance with:

(1) Any United Nations recommendation, including the class number (see § 172.407), in the document entitled ''*Transport of Dangerous Goods.*'';

(2) The International Maritime Organization (IMO) requirements, including the class number (see § 172.407), in the document entitled ''International Maritime Dangerous Goods Code'';

(3) The ICAO Technical Instructions; or

(4) The TDG Regulations.

(d) The provisions of paragraph (a) of this section do not apply to a packaging bearing a label if that packaging is:

(1) Unused or cleaned and purged of all residue;

(2) Transported in a transport vehicle or freight container in such a manner that the packaging is not visible during transportation; and

(3) Loaded by the shipper and unloaded by the shipper or consignee.

[Amdt. 172–9, 41 FR 15996, Apr. 15, 1976, as amended by Amdt. 172–75, 47 FR 44471, Oct. 7, 1982; Amdt. 172–77, 47 FR 54822, Dec. 6, 1982; Amdt. 172–94, 49 FR 38134, Sept. 27, 1984; Amdt. 172–100, 50 FR 41521, Oct. 11, 1985; Amdt. 172–123, 55 FR 52594, Dec. 21, 1990; Amdt. 172–132, 58 FR 50501, Sept. 27, 1993]

§ 172.402 Additional labeling requirements.

(a) *Subsidiary hazard labels.* Each package containing a hazardous material—

(1) Shall be labeled with primary and subsidiary hazard labels as specified in Column 6 of the § 172.101 Table (unless excepted in paragraph (a)(2) of this section); and

(2)For other than Class 1 or Class 2 materials (for subsidiary labeling requirements for Class 1 or Class 2 materials see paragraph (e) or paragraphs (f) and (g), respectively, of this section), if not already labeled under paragraph (a)(1) of this section, shall be labeled with subsidiary hazard labels in accordance with the following table:

SUBSIDIARY HAZARD LABELS

Subsidiary hazard level (packing group)	Subsidiary Hazard (Class or Division)						
	3	4.1	4.2	4.3	5.1	6.1	8
I	X	***	***	X	X	X	X
II	X	X	X	X	X	X	X
III	*	X	X	X	X	X	X

X—Required for all modes.

*—Required for all modes, except for a material with a flash point at or above 38° C (100°F) transported by rail or highway.

**—Reserved

***—Impossible as subsidiary hazard.

(b) *Display of hazard class on labels.* The appropriate hazard class or, for Division 5.1 or 5.2 the division number, shall be displayed in the lower corner of a primary hazard label and may not be displayed on a subsidiary label.

(c) *Cargo Aircraft Only label.* Each person who offers for transportation or transports by aircraft a package containing a hazardous material which is authorized on cargo aircraft only shall label the package with a CARGO AIRCRAFT ONLY label specified in § 172.448 of this subpart.

(d) *Class 7 (Radioactive) Materials.* Except as otherwise provided in this paragraph, each package containing a Class 7 material that also meets the definition of one or more additional hazard classes must be labeled as a Class 7 material as required by § 172.403 of this subpart and for each additional hazard. A subsidiary hazard label is not required on a package containing a Class 7 material that conforms to criteria specified in § 173.4 of this subchapter, except § 173.4(a)(1)(iv) of this subchapter.

(e) *Class 1 (explosive) Materials.* In addition to the label specified in Column 6 of the § 172.101 Table, each package of Class 1 material that also meets the definition for:

(1) Division 6.1, Packing Groups I or II, shall be labeled POISON; or

(2) Class 7, shall be labeled in accordance with § 172.403 of this subpart.

(f) *Division 2.2 materials.* In addition to the label specified in Column 6 of the § 172.101 Table, each package of Division 2.2 material that also meets the definition for an oxidizing gas (see § 171.8 of this subchapter) must be labeled OXIDIZER.

(g) *Division 2.3 materials.* In addition to the label specified in Column 6 of the § 172.101 Table, each package of Division 2.3 material that also meets the definition for:

(1) Division 2.1, must be labeled Flammable Gas;

(2) Division 5.1, must be labeled Oxidizer; and

(3) Class 8, must be labeled Corrosive.

[Amdt. 172–123, 55 FR 52594, Dec. 21, 1990, as amended at 56 FR 66255, Dec. 20, 1991; Amdt. 172–139, 59 FR 67490, Dec. 29, 1994; Amdt. 172–140, 60 FR 26805, May 18, 1995; Amdt. 172–149, 61 FR 27173, May 30, 1996]

EFFECTIVE DATE NOTE: At 62 FR 39405, July 22, 1997, § 172.402(e)(1) was revised, effective Oct. 1, 1998. For the convenience of the user the revised text is set forth as follows:

§ 172.402 Additional labeling requirements.

* * * * *

(e) * * *

(1) Division 6.1, Packing Groups I or II, shall be labeled POISON or POISON INHALATION HAZARD, as appropriate.

* * * * *

§ 172.403 Class 7 (radioactive) material.

(a) Unless excepted from labeling by §§ 173.421 through 173.428 of this subchapter, each package of radioactive material must be labeled as provided in this section.

(b) The proper label to affix to a package of Class 7 (radioactive) material is based on the radiation level at the surface of the package and the transport index. The proper category of label must be determined in accordance with paragraph (c) of this section. The label to be applied must be the highest category required for any of the two determining conditions for the package. RADIOACTIVE WHITE–I is the lowest category and RADIOACTIVE YELLOW–III is the highest. For example, a package with a transport index of 0.8 and a maximum surface radiation level of 0.6 millisievert (60 millirems) per hour must bear a RADIOACTIVE YELLOW–III label.

(c) Category of label to be applied to Class 7 (radioactive) materials packages:

Transport index	Maximum radiation level at any point on the external surface	Label category[1]
0[2]	Less than or equal to 0.005 mSv/h (0.5 mrem/h).	WHITE–I.
More than 0 but not more than 1	Greater than 0.005 mSv/h (0.5 mrem/h) but less than or equal to 0.5 mSv/h (50 mrem/h).	YELLOW–II.
More than 1 but not more than 10	Greater than 0.5 mSv/h (50 mrem/h) but less than or equal to 2 mSv/h (200 mrem/h).	YELLOW–III.
More than 10	Greater than 2 mSv/h (200 mrem/h) but less than or equal to 10 mSv/h (1,000 mrem/h).	YELLOW–III (Must be shipped under exclusive use provisions; see 173.441(b) of this subchapter).

[1] Any package containing a ''highway route controlled quantity'' (§ 173.403 of this subchapter) must be labelled as RADIOACTIVE YELLOW–III.
[2] If the measured TI is not greater than 0.05, the value may be considered to be zero.

(d) *EMPTY* label. See § 173.428(d) of this subchapter for EMPTY labeling requirements.

(e) [Reserved]

(f) Each package required by this section to be labeled with a RADIOACTIVE label must have two of these labels, affixed to opposite sides of the package. (See § 172.406(e)(3) for freight container label requirements).

(g) The following applicable items of information must be entered in the blank spaces on the RADIOACTIVE label by legible printing (manual or mechanical), using a durable weather resistant means of marking:

(1) *Contents.* The name of the radionuclides as taken from the listing of radionuclides in § 173.435 of this subchapter (symbols which conform to established radiation protection terminology are authorized, i.e., ^{99}Mo, ^{60}Co, etc.). For mixtures of radionuclides, with consideration of space available on the label, the radionuclides that must be shown must be determined in accordance with § 173.433(f) of this subchapter.

(2) *Activity.* Activity units must be expressed in appropriate SI units (e.g., Becquerels (Bq), Terabecquerels (TBq), etc.) or in both appropriate SI units and appropriate customary units (Curies (Ci), milliCuries (mCi), microcuries (uCi), etc.). Alternatively, for domestic transport the activity may be

expressed solely in terms of curies until April 1, 1997. Abbreviations are authorized. Except for plutonium-238, plutonium-239, and plutonium-241, the weight in grams or kilograms of fissile radionuclides may be inserted instead of activity units. For plutonium-238, plutonium-239, and plutonium-241, the weight in grams or kilograms of fissile radionuclides may be inserted in addition to the activity units.

(3) *Transport index.* (See § 173.403 of this subchapter.)

[Amdt. 172–29, 41 FR 15996, Apr. 15, 1976, as amended by Amdt. 172–29A, 41 FR 40679, Sept. 20, 1976; Amdt. 172–78, 48 FR 10226, Mar. 10, 1983; 48 FR 13431, Mar. 31, 1983; 48 FR 31217, July 7, 1983; Amdt. 172–85, 48 FR 50459, Nov. 1, 1983; Amdt. 172–114, 53 FR 38274, Sept. 29, 1988; Amdt. 172–123, 55 FR 52594, Dec. 21, 1990; Amdt. 172–143, 60 FR 50305, Sept. 28, 1995; Amdt. 172–143, 61 FR 20750, May 8, 1996]

§ 172.404 Labels for mixed and consolidated packaging.

(a) *Mixed packaging.* When hazardous materials having different hazard classes are packed within the same packaging, or within the same outside container or overpack as described in § 173.25 and authorized by § 173.21 of this subchapter, the packaging, outside container or overpack must be labeled as required for each class of hazardous material contained therein.

(b) *Consolidated packaging.* When two or more packages containing compatible hazardous material (see § 173.21 of this subchapter) are placed within the same outside container or overpack, the outside container or overpack must be labeled as required for each class of hazardous material contained therein.

§ 172.405 Authorized label modifications.

(a) For Classes 1, 2, 3, 4, 5, 6, and 8, text indicating a hazard (for example FLAMMABLE LIQUID) is not required on a primary or subsidiary label when—

(1) The label otherwise conforms to the provisions of this subpart, and

(2) The hazard class or, for Division 5.1 or 5.2 the division number, is displayed in the lower corner of the label, if the label corresponds to the primary hazard class of the hazardous material.

(b) For a package containing Oxygen, compressed, or Oxygen, refrigerated liquid, the OXIDIZER label specified in § 172.426 of this subpart, modified to display the word ''OXYGEN'' instead of ''OXIDIZER'', and the class number ''2'' instead of ''5.1'', may be used in place of the NON-FLAMMABLE GAS and OXIDIZER labels. Notwithstanding the provisions of paragraph (a) of this section, the word ''OXYGEN'' must appear on the label.

[Amdt. 172–123, 55 FR 52594, Dec. 21, 1990, as amended at 56 FR 66255, Dec. 20, 1991; 57 FR 45458, Oct. 1, 1992]

§ 172.406 Placement of labels.

(a) *General.* (1) Except as provided in paragraphs (b) and (e) of this section, each label required by this subpart must—

(i) Be printed on or affixed to a surface (other than the bottom) of the package or containment device containing the hazardous material; and

(ii) Be located on the same surface of the package and near the proper shipping name marking, if the package dimensions are adequate.

(2) Except as provided in paragraph (e) of this section, duplicate labeling is not required on a package or containment device (such as to satisfy redundant labeling requirements).

(b) *Exceptions.* A label may be printed on or placed on a securely affixed tag, or may be affixed by other suitable means to:

(1) A package that contains no radioactive material and which has dimensions less than those of the required label;

(2) A cylinder; and

(3) A package which has such an irregular surface that a label cannot be satisfactorily affixed.

(c) *Placement of multiple labels.* When primary and subsidiary hazard labels are required, they must be displayed next to each other. Placement conforms to this requirement if labels are within 150 mm (6 inches) of one another.

(d) *Contrast with background.* Each label must be printed on or affixed to a background of contrasting color, or must have a dotted or solid line outer border.

(e) *Duplicate labeling.* Generally, only one of each different required label

must be displayed on a package. However, duplicate labels must be displayed on at least two sides or two ends (other than the bottom) of—

(1) Each package or overpack having a volume of 1.8 m^3 (64 cubic feet) or more;

(2) Each non-bulk package containing a radioactive material;

(3) Each DOT 106 or 110 multi-unit tank car tank. Labels must be displayed on each end;

(4) Each portable tank of less than 3,785 L (1000 gallons) capacity; and

(5) Each freight container or aircraft unit load device having a volume of 1.8 m^3 (64 cubic feet) or more, but less than 18 m^3 (640 cubic feet). One of each required label must be displayed on or near the closure.

(f) *Visibility*. A label must be clearly visible and may not be obscured by markings or attachments.

[Amdt. 172–123, 55 FR 52594, Dec. 21, 1990, as amended at 56 FR 66255, Dec. 20, 1991; Amdt. 172–130, 58 FR 51531, Oct. 1, 1993]

§ 172.407 Label specifications.

(a) *Durability*. Each label, whether printed on or affixed to a package, must be durable and weather resistant. A label on a package must be able to withstand, without deterioration or a substantial change in color, a 30-day exposure to conditions incident to transportation that reasonably could be expected to be encountered by the labeled package.

(b) *Design*. (1) Except for size and color, the printing, inner border, and symbol on each label must be as shown in §§ 172.411 through 172.448 of this subpart, as appropriate.

(2) The dotted line border shown on each label is not part of the label specification, except when used as an alternative for the solid line outer border to meet the requirements of § 172.406(d) of this subpart.

(c) *Size*. (1) Each diamond (square-on-point) label prescribed in this subpart must be at least 100 mm (3.9 inches) on each side with each side having a solid line inner border 5.0 to 6.3 mm (0.2 to 0.25 inches) from the edge.

(2) The CARGO AIRCRAFT ONLY label must be a rectangle measuring at least 110 mm (4.3 inches) in height by 120 mm (4.7 inches) in width. The word ''DANGER'' must be shown in letters measuring at least 12.7 mm (0.5 inches) in height.

(3) Except as otherwise provided in this subpart, the hazard class number, or division number, as appropriate, must be at least 6.3 mm (0.25 inches) and not greater than 12.7 mm (0.5 inches).

(4) When text indicating a hazard is displayed on a label, the label name must be shown in letters measuring at least 7.6 mm (0.3 inches) in height except that—

(i) For a SPONTANEOUSLY COMBUSTIBLE or DANGEROUS WHEN WET label, respectively, the words ''Spontaneously'' and ''When Wet'' must be shown in letters measuring at least 5.1 mm (0.2 inches) in height.

(ii) For a KEEP AWAY FROM FOOD label, the word ''HARMFUL'' must be shown in letters measuring at least 7.6 mm (0.3 inches) in height.

(5) The symbol on each label must be proportionate in size to that shown in the appropriate section of this subpart.

(d) *Color*. (1) The background color on each label must be as prescribed in §§ 172.411 through 172.448 of this subpart, as appropriate.

(2) The symbol, text, numbers, and border must be shown in black on a label except that—

(i) White may be used on a label with a one color background of green, red or blue; and

(ii) White must be used for the text and class number for the CORROSIVE label.

(3) Black and any color on a label must be able to withstand, without substantial change, a 72-hour fadeometer test (for a description of equipment designed for this purpose, see ASTM G 23–69 (1975) or ASTM G 26–70).

(4) (i) A color on a label, upon visual examination, must fall within the color tolerances—

(A) Displayed on color charts conforming to the technical specifications for charts set forth in Table 1 or 2 in appendix A to this part; or

(B) For labels printed on packaging surfaces, specified in Table 3 in appendix A to this part.

(ii) Color charts conforming to appendix A to this part are on display in

Room 8421, Nassif Building, 400 Seventh Street, SW., Washington DC 20590–0001.

(5) The specified label color must extend to the edge of the label in the area designated on each label except the CORROSIVE, RADIOACTIVE YELLOW–II AND RADIOACTIVE YELLOW–III labels on which the color must extend only to the inner border.

(e) *Form identification.* A label may contain form identification information, including the name of its maker, provided that information is printed outside the solid line inner border in no larger than 10-point type.

(f) *Exceptions.* A label conforming to specifications in the UN Recommendations may be used in place of a corresponding label which conforms to the requirements of this subpart.

(g) *Trefoil symbol.* The trefoil symbol on the RADIOACTIVE WHITE–I, RADIOACTIVE YELLOW–II, and RADIOACTIVE YELLOW–III labels must meet the appropriate specifications in Appendix B of this part.

[Amdt. 172–123, 55 FR 52595, Dec. 21, 1990, as amended at 56 FR 66256, Dec. 20, 1991; Amdt. 172–143, 60 FR 50305, Sept. 28, 1995]

§ 172.411 EXPLOSIVE 1.1, 1.2, 1.3, 1.4, 1.5 and 1.6 labels, and EXPLOSIVE Subsidiary label.

(a) Except for size and color, the EXPLOSIVE 1.1, EXPLOSIVE 1.2 and EXPLOSIVE 1.3 labels must be as follows:

(b) In addition to complying with § 172.407, the background color on the EXPLOSIVE 1.1, EXPLOSIVE 1.2 and EXPLOSIVE 1.3 labels must be orange. The ''**'' shall be replaced with the appropriate division number and compatibility group. The compatibility group letter must be the same size as the division number and must be shown as a capitalized Roman letter.

(c) Except for size and color, the EXPLOSIVE 1.4, EXPLOSIVE 1.5, EXPLOSIVE 1.6 labels, and EXPLOSIVE Subsidiary label must be as follows:

EXPLOSIVE 1.4:

EXPLOSIVE 1.5:

EXPLOSIVE 1.6:

EXPLOSIVE SUBSIDIARY LABEL:

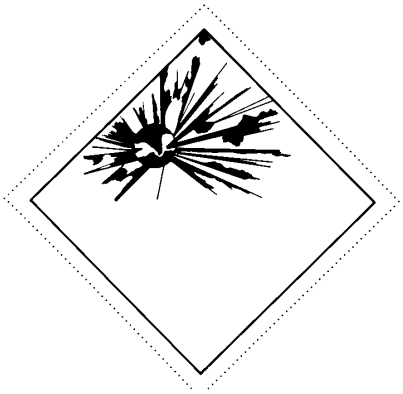

(d) In addition to complying with § 172.407, the background color on the EXPLOSIVE 1.4, EXPLOSIVE 1.5, EXPLOSIVE 1.6, and EXPLOSIVE Subsidiary label must be orange. Except for the EXPLOSIVE subsidiary label, the ''*'' shall be replaced with the appropriate compatibility group. The compatibility group letter must be shown as a capitalized Roman letter. Except for the EXPLOSIVE subsidiary label, division numerals must measure at least 30 mm (1.2 inches) in height and at least 5 mm (0.2 inches) in width.

[Amdt. 172–123, 56 FR 66256, Dec. 20, 1991, as amended by Amdt. 172–139, 59 FR 67490, Dec. 29, 1994]

§ 172.415 NON-FLAMMABLE GAS Label.

(a) Except for size and color, the NON-FLAMMABLE GAS label must be as follows:

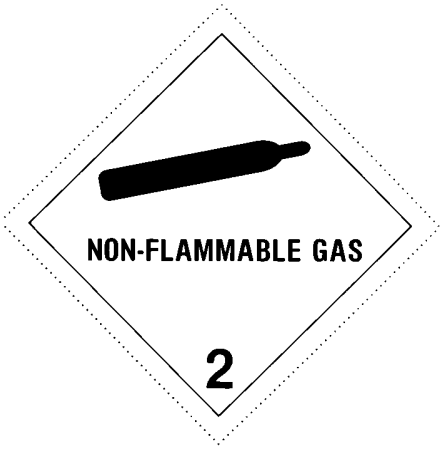

(b) In addition to complying with § 172.407, the background color on the NON-FLAMMABLE GAS label must be green.

[Amdt. 172–123, 56 FR 66256, Dec. 20, 1991]

§ 172.416 POISON GAS label.

(a) Except for size and color, the POISON GAS label must be as follows:

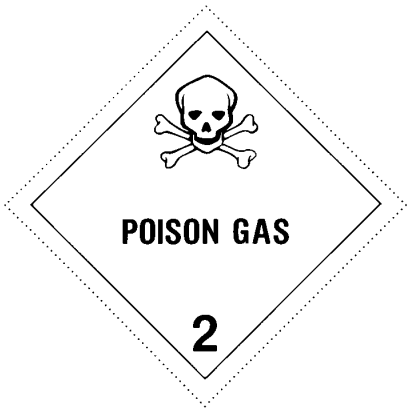

(b) In addition to complying with § 172.407, the background on the POISON GAS label must be white. The words ''TOXIC GAS'' may be used in lieu of the words ''POISON GAS''.

[Amdt. 172–123, 56 FR 66257, Dec. 20, 1991, as amended by Amdt. 172–139. 59 FR 67490, Dec. 29, 1994]

EFFECTIVE DATE NOTE: At 62 FR 39405, July 22, 1997, § 172.416 was revised, effective Oct. 1, 1998. For the convenience of the user the revised text is set forth as follows:

§ 172.416 POISON GAS label.

(a) Except for size and color, the POISON GAS label must be as follows:

(b) In addition to complying with §172.407, the background on the POISON GAS label and the symbol must be white. The background of the upper diamond must be black and the lower point of the upper diamond must be 14 mm (0.54 inches) above the horizontal center line.

[62 FR 39405, July 22, 1997]

§172.417 FLAMMABLE GAS label.

(a) Except for size and color, the FLAMMABLE GAS label must be as follows:

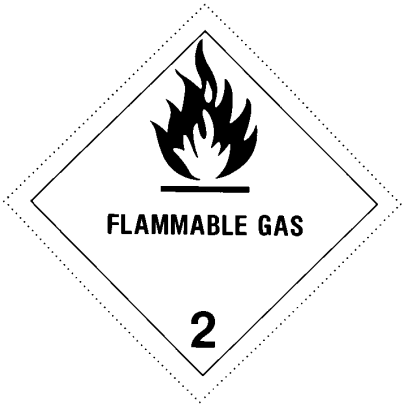

(b) In addition to complying with §172.407, the background color on the FLAMMABLE GAS label must be red.

[Amdt. 172–123, 56 FR 66257, Dec. 20, 1991]

§172.419 FLAMMABLE LIQUID label.

(a) Except for size and color the FLAMMABLE LIQUID label must be as follows:

(b) In addition to complying with §172.407, the background color on the FLAMMABLE LIQUID label must be red.

[Amdt. 172–123, 56 FR 66257, Dec. 20, 1991]

§172.420 FLAMMABLE SOLID label.

(a) Except for size and color, the FLAMMABLE SOLID label must be as follows:

(b) In addition to complying with §172.407, the background on the FLAMMABLE SOLID label must be white with vertical red stripes equally spaced on each side of a red stripe placed in the center of the label. The red vertical stripes must be spaced so that, visually, they appear equal in width to the white spaces between them. The

symbol (flame) and text (when used) must be overprinted. The text ''FLAMMABLE SOLID'' may be placed in a white rectangle.

[Amdt. 172–123, 56 FR 66257, Dec. 20, 1991]

§ 172.422 SPONTANEOUSLY COMBUSTIBLE label.

(a) Except for size and color, the SPONTANEOUSLY COMBUSTIBLE label must be as follows:

(b) In addition to complying with § 172.407, the background color on the lower half of the SPONTANEOUSLY COMBUSTIBLE label must be red and the upper half must be white.

[Amdt. 172–123, 56 FR 66257, Dec. 20, 1991, as amended at 57 FR 45458, Oct. 1, 1992]

§ 172.423 DANGEROUS WHEN WET label.

(a) Except for size and color, the DANGEROUS WHEN WET label must be as follows:

(b) In addition to complying with § 172.407, the background color on the DANGEROUS WHEN WET label must be blue.

[Amdt. 172–123, 56 FR 66257, Dec. 20, 1991]

§ 172.426 OXIDIZER label.

(a) Except for size and color, the OXIDIZER label must be as follows:

(b) In addition to complying with § 172.407, the background color on the OXIDIZER label must be yellow.

[Amdt. 172–123, 56 FR 66257, Dec. 20, 1991]

§ 172.427 ORGANIC PEROXIDE label.

(a) Except for size and color, the ORGANIC PEROXIDE label must be as follows:

follows:

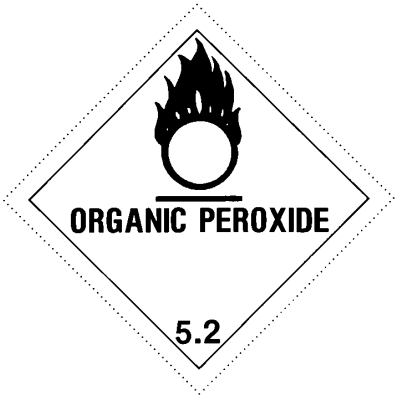

(b) In addition to complying with §172.407, the background color on the ORGANIC PEROXIDE label must be yellow.

[Amdt. 172–123, 56 FR 66258, Dec. 20, 1991]

§172.429 POISON INHALATION HAZARD label.

(a) Except for size and color, the POISON INHALATION HAZARD label must be as follows:

(b) In addition to complying with § 172.407, the background on the POISON INHALATION HAZARD label and the symbol must be white. The background of the upper diamond must be black and the lower point of the upper diamond must be 14 mm (0.54 inches) above the horizontal center line.

[62 FR 39406, July 22, 1997]

EFFECTIVE DATE NOTE: At 62 FR 39406, July 22, 1997, § 172.429, as added by Amdt. 172–151, 62 FR 1229, Jan. 8, 1997, effective Oct. 1, 1998 was revised, effective Oct. 1, 1998.

§ 172.430 POISON label.

(a) Except for size and color, the POISON label must be as follows:

(b) In addition to complying with § 172.407, the background on the POISON label must be white. The word ''TOXIC'' may be used in lieu of the word ''POISON''.

[Amdt. 172–123, 56 FR 66258, Dec. 20, 1991, as amended by Amdt. 172–139, 59 FR 67490, Dec. 29, 1994]

§ 172.431 KEEP AWAY FROM FOOD label.

(a) Except for size and color, the KEEP AWAY FROM FOOD label must be as follows:

(b) In addition to complying with § 172.407, the background on the KEEP AWAY FROM FOOD label must be white.

[Amdt. 172–123, 56 FR 66258, Dec. 20, 1991]

§ 172.432 INFECTIOUS SUBSTANCE label.

(a) Except for size and color, the INFECTIOUS SUBSTANCE label must be as follows:

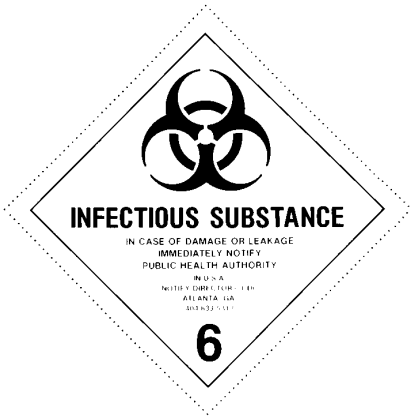

(b) In addition to complying with § 172.407, the background on the INFECTIOUS SUBSTANCE label must be white.

[Amdt. 172–123, 56 FR 66258, Dec. 20, 1991]

§172.436 RADIOACTIVE WHITE–I label.

(a) Except for size and color, the RADIOACTIVE WHITE–I label must be as follows:

(b) In addition to complying with §172.407, the background on the RADIOACTIVE WHITE–I label must be white. The printing and symbol must be black, except for the ''I'' which must be red.

[Amdt. 172–123, 56 FR 66259, Dec. 20, 1991]

§172.438 RADIOACTIVE YELLOW–II label.

(a) Except for size and color, the RADIOACTIVE YELLOW–II must be as follows:

(b) In addition to complying with §172.407, the background color on the RADIOACTIVE YELLOW–II label must be yellow in the top half and white in the lower half. The printing and symbol must be black, except for the ''II'' which must be red.

[Amdt. 172–123, 56 FR 66259, Dec. 20, 1991]

§172.440 RADIOACTIVE YELLOW–III label.

(a) Except for size and color, the RADIOACTIVE YELLOW–III label must be as follows:

(b) In addition to complying with §172.407, the background color on the RADIOACTIVE YELLOW–III label must be yellow in the top half and white in the lower half. The printing and symbol must be black, except for the ''III'' which must be red.

[Amdt. 172–123, 56 FR 66259, Dec. 20, 1991]

§172.442 CORROSIVE label.

(a) Except for size and color, the CORROSIVE label must be as follows:

(b) In addition to complying with § 172.407, the background on the CORROSIVE label must be white in the top half and black in the lower half.

[Amdt. 172–123, 56 FR 66259, Dec. 20, 1991]

§ 172.444 [Reserved]

§ 172.446 CLASS 9 label.

(a) Except for size and color, the ''CLASS 9'' (miscellaneous hazardous materials) label must be as follows:

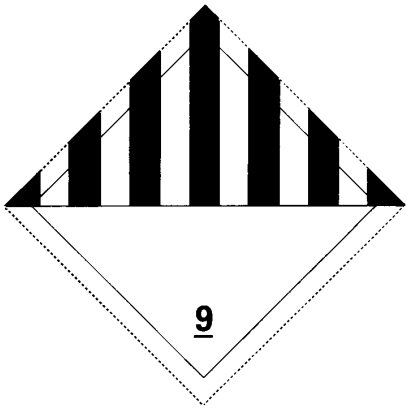

(b) In addition to complying with § 172.407, the background on the CLASS 9 label must be white with seven black vertical stripes on the top half. The black vertical stripes must be spaced, so that, visually, they appear equal in width to the six white spaces between them. The lower half of the label must be white with the class number ''9'' underlined and centered at the bottom.

[Amdt. 172–123, 56 FR 66259, Dec. 20, 1991]

§ 172.448 CARGO AIRCRAFT ONLY label.

(a) Except for size and color, the CARGO AIRCRAFT ONLY label must be as follows:

(b) The CARGO AIRCRAFT ONLY label must be black on an orange background.

[Amdt. 172–123, 56 FR 66259, Dec. 20, 1991]

§172.450 EMPTY label.

(a) Each EMPTY label, except for size, must be as follows:

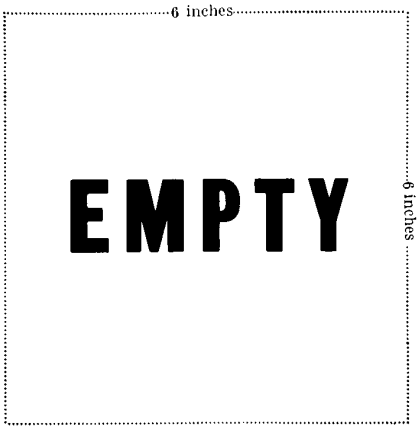

(1) Each side must be at least 6 inches (152 mm.) with each letter at least 1 inch (25.4 mm.) in height.

(2) The label must be white with black printing.

(b) [Reserved]

Subpart F—Placarding

§172.500 Applicability of placarding requirements.

(a) Each person who offers for transportation or transports any hazardous material subject to this subchapter shall comply with the applicable placarding requirements of this subpart.

(b) This subpart does not apply to—

(1) Infectious substances;

(2) Hazardous materials classed as ORM–D;

(3) Hazardous materials authorized by this subchapter to be offered for transportation as Limited Quantities when identified as such on shipping papers in accordance with §172.203(b);

(4) Hazardous materials prepared in accordance with §173.13 of this subchapter;

(5) Hazardous materials which are packaged as small quantities under the provisions of §173.4 of this subchapter; and

(6) Combustible liquids in non-bulk packagings.

[Amdt. 172–123, 55 FR 52599, Dec. 21, 1990, as amended by Amdt. 172–149, 61 FR 27173, May 30, 1996]

§172.502 Prohibited and permissive placarding.

(a) *Prohibited placarding.* Except as provided in paragraph (b) of this section, no person may affix or display on a packaging, freight container, unit load device, motor vehicle or rail car—

(1) Any placard described in this subpart unless—

(i) The material being offered or transported is a hazardous material;

(ii) The placard represents a hazard of the hazardous material being offered or transported; and

(iii) Any placarding conforms to the requirements of this subpart.

(2) Any sign or other device that, by its color, design, shape or content, could be confused with any placard prescribed in this subpart.

(b) *Exceptions.* (1) The restrictions in paragraph (a) of this section do not apply to a bulk packaging, freight container, unit load device, transport vehicle or rail car which is placarded in conformance with the TDG Regulations, the IMDG Code or the UN Recommendations.

(2) The restrictions of paragraph (a) of this section do not apply to the display of an identification number on a white square-on-point configuration in accordance with §172.336(b) of this part.

(3) The restrictions in paragraph (a)(2) of this section do not apply until October 1, 2001 to a safety sign or safety slogan (e.g., ''Drive Safely'' or ''Drive Carefully''), which was permanently marked on a transport vehicle, bulk packaging, or freight container on or before August 21, 1997.

(c) *Permissive placarding.* Placards may be displayed for a hazardous material, even when not required, if the placarding otherwise conforms to the requirements of this subpart.

[Amdt. 172–123, 55 FR 52599, Dec. 21, 1990, as amended at 56 FR 66259, Dec. 20, 1991; Amdt. 172–151, 62 FR 1230, Jan. 8, 1997; 62 FR 39389 and 39407, July 22, 1997]

EFFECTIVE DATE NOTE: By Amdt. 172–151, 62 FR 1230, Jan. 8, 1997, in § 172.502, paragraph (a)(2) was revised and paragraph (b)(3) was added, effective Oct. 1, 1997. At 62 FR 39389 and 39407, July 22, 1997, the effective date was delayed until Oct. 1, 1998 and paragraph (b)(3) was revised. For the convenience of the user revised paragraph (a)(2) is set forth as follows:

§ 172.502 Prohibited and permissive placarding.

(a) * * *

(2) Any sign, advertisement, slogan (such as ''Drive Safely''), or device that, by its color, design, shape or content, could be confused with any placard prescribed in this subpart.

* * * * *

§ 172.503 Identification number display on placards.

For procedures and limitations pertaining to the display of identification numbers on placards, see § 172.334.

[Amdt. 172–58, 45 FR 34701, May 22, 1980]

§ 172.504 General placarding requirements.

(a) *General.* Except as otherwise provided in this subchapter, each bulk packaging, freight container, unit load device, transport vehicle or rail car containing any quantity of a hazardous material must be placarded on each side and each end with the type of placards specified in Tables 1 and 2 of this section and in accordance with other placarding requirements of this subpart, including the specifications for the placards named in the tables and described in detail in §§ 172.519 through 172.560.

(b) *DANGEROUS placard.* A freight container, unit load device, transport vehicle or rail car which contains non-bulk packagings with two or more categories of hazardous materials that require different placards specified in Table 2 may be placarded with DANGEROUS placards instead of the separate placarding specified for each of the materials in Table 2. However, when 2,268 kg (5,000 pounds) or more of one category of material is loaded therein at one loading facility, the placard specified in Table 2 of paragraph (e) of this section for that category must be applied.

(c) *Exception for less than 454 kg (1,001 pounds).* Except for bulk packagings and hazardous materials subject to § 172.505, when hazardous materials covered by Table 2 of this section are transported by highway or rail, placards are not required on—

(1) A transport vehicle or freight container which contains less than 454 kg (1001 pounds) aggregate gross weight of hazardous materials covered by Table 2 of paragraph (e) of this section; or

(2) A rail car loaded with transport vehicles or freight containers, none of which is required to be placarded.

The exceptions provided in paragraph (c) of this section do not prohibit the display of placards in the manner prescribed in this subpart, if not otherwise prohibited (see § 172.502), on transport vehicles or freight containers which are not required to be placarded.

(d) *Exception for empty non-bulk packages.* A non-bulk packaging that contains only the residue of a hazardous material covered by Table 2 of paragraph (e) of this section need not be included in determining placarding requirements.

(e) *Placarding tables.* Placards are specified for hazardous materials in accordance with the following tables:

TABLE 1

Category of material (Hazard class or division number and additional description, as appropriate)	Placard name	Placard design section reference (§)
1.1	EXPLOSIVES 1.1	172.522
1.2	EXPLOSIVES 1.2	172.522
1.3	EXPLOSIVES 1.3	172.522
2.3	POISON GAS	172.540
4.3	DANGEROUS WHEN WET	172.548
6.1 (PG I, inhalation hazard only)	POISON	172.554
7 (Radioactive Yellow III label only)	RADIOACTIVE [1]	172.556

[1] RADIOACTIVE placard also required for exclusive use shipments of low specific activity material and surface contaminated objects transported in accordance with § 173.427(b)(3) or (c) of this subchapter.

TABLE 2

Category of material (Hazard class or division number and additional description, as appropriate)	Placard name	Placard design section reference (§)
1.4	EXPLOSIVES 1.4	172.523
1.5	EXPLOSIVES 1.5	172.524
1.6	EXPLOSIVES 1.6	172.525
2.1	FLAMMABLE GAS	172.532
2.2	NON-FLAMMABLE GAS	172.528
3	FLAMMABLE	172.542
Combustible liquid	COMBUSTIBLE	172.544
4.1	FLAMMABLE SOLID	172.546
4.2	SPONTANEOUSLY COMBUSTIBLE	172.547
5.1	OXIDIZER	172.550
5.2	ORGANIC PEROXIDE	172.552
6.1 (PG I or II, other than PG I inhalation hazard)	POISON	172.554
6.1 (PG III)	KEEP AWAY FROM FOOD	172.553
6.2	(None)	
8	CORROSIVE	172.558
9	CLASS 9	172.560
ORM–D	(None)	

(f) *Additional placarding exceptions.* (1) When more than one division placard is required for Class 1 materials on a transport vehicle, rail car, freight container or unit load device, only the placard representing the lowest division number must be displayed.

(2) A FLAMMABLE placard may be used in place of a COMBUSTIBLE placard on—

(i) A cargo tank or portable tank.

(ii) A compartmented tank car which contains both flammable and combustible liquids.

(3) A NON-FLAMMABLE GAS placard is not required on a transport vehicle which contains non-flammable gas if the transport vehicle also contains flammable gas or oxygen and it is placarded with FLAMMABLE GAS or OXYGEN placards, as required.

(4) OXIDIZER placards are not required for Division 5.1 materials on freight containers, unit load devices, transport vehicles or rail cars which also contain Division 1.1 or 1.2 materials and which are placarded with EXPLOSIVES 1.1 or 1.2 placards, as required.

(5) For transportation by transport vehicle or rail car only, an OXIDIZER placard is not required for Division 5.1 materials on a transport vehicle, rail car or freight container which also contains Division 1.5 explosives and is placarded with EXPLOSIVES 1.5 placards, as required.

(6) The EXPLOSIVE 1.4 placard is not required for those Division 1.4 Compatibility Group S (1.4S) materials that are not required to be labeled 1.4S.

(7) For domestic transportation of oxygen, compressed or oxygen, refrigerated liquid, the OXYGEN placard in § 172.530 of this subpart may be used in place of a NON-FLAMMABLE GAS placard.

(8) Except for a material classed as a combustible liquid that also meets the definition of a Class 9 material, a COMBUSTIBLE placard is not required for a material classed as a combustible liquid when transported in a non-bulk packaging.

(9) For domestic transportation, a Class 9 placard is not required. A bulk packaging containing a Class 9 material must be marked with the appropriate identification number displayed on a Class 9 placard, an orange panel or a white-square-on-point display configuration as required by subpart D of this part.

(10) For domestic transportation of Division 6.1, PG III materials, a POISON placard may be used in place of a KEEP AWAY FROM FOOD placard.

(11) For domestic transportation, a POISON placard is not required on a transport vehicle or freight container required to display a POISON INHALATION HAZARD or POISON GAS placard.

(g) For shipments of Class 1 (explosive) materials by aircraft or vessel,

the applicable compatibility group letter must be displayed on the placards required by this section.

[Amdt. 172–123, 55 FR 52600, Dec. 21, 1990, as amended at 56 FR 66260, Dec. 20, 1991; 57 FR 45460, Oct. 1, 1992; Amdt. 172–123, 57 FR 59310, Dec. 15, 1992; Amdt. 172–143, 60 FR 50305, Sept. 28, 1995; Amdt. 172–150, 61 FR 50624, Sept. 26, 1996; Amdt. 172–151, 62 FR 1230, Jan. 8, 1997; 62 FR 39398 and 39407, July 22, 1997]

EFFECTIVE DATE NOTE: By Amdt. 172–151, 62 FR 1230, Jan. 8, 1997, in § 172.504, paragraph (f)(11) was added, and paragraphs (b) and (e) were revised, effective Oct. 1, 1997. At 62 FR 39398 and 39407, July 22, 1997, the effective date was delayed until Oct. 1, 1998 and revised paragraph (e) was amended by revising the entries for Division 6.1 materials in Tables 1 and 2, effective Oct. 1, 1998. For the convenience of the user, the revised text is set forth as follows:

§ 172.504 General placarding requirements.

* * * * *

(b) *DANGEROUS placard.* A freight container, unit load device, transport vehicle, or rail car which contains non-bulk packages with two or more categories of hazardous materials that require different placards specified in Table 2 of paragraph (e) of this section may be placarded with a DANGEROUS placard instead of the separate placarding specified for each of the materials in Table 2 of paragraph (e) of this section. However, when 1,000 kg (2,205 pounds) aggregate gross weight or more of one category of material is loaded therein at one loading facility on a freight container, unit load device, transport vehicle, or rail car, the placard specified in Table 2 of paragraph (e) of this section for that category must be applied.

* * * * *

(e) *Placarding tables.* Placards are specified for hazardous materials in accordance with the following tables:

TABLE 1

Category of material (Hazard class or division number and additional description, as appropriate)	Placard name	Placard design section reference (§)
1.1	EXPLOSIVES 1.1	172.522
1.2	EXPLOSIVES 1.2	172.522
1.3	EXPLOSIVES 1.3	172.522
2.3	POISON GAS	172.540
4.3	DANGEROUS WHEN WET	172.548
5.2 (Organic peroxide, Type B, liquid *or* solid, temperature controlled).	ORGANIC PEROXIDE	172.552
6.1 (inhalation hazard, Zone A or B)	POISON INHALATION HAZARD	172.555
7 (Radioactive Yellow III label only)	RADIOACTIVE [1]	172.556

[1] RADIOACTIVE placard also required for exclusive use shipments of low specific activity material in accordance with § 173.425 (b) or (c) of this subchapter.

TABLE 2

Category of material (Hazard class or division number and additional description, as appropriate)	Placard name	Placard design section reference (§)
1.4	EXPLOSIVES 1.4	172.523
1.5	EXPLOSIVES 1.5	172.524
1.6	EXPLOSIVES 1.6	172.525
2.1	FLAMMABLE GAS	172.532
2.2	NON-FLAMMABLE GAS	172.528
3	FLAMMABLE	172.542
Combustible liquid	COMBUSTIBLE	172.544
4.1	FLAMMABLE SOLID	172.546
4.2	SPONTANEOUSLY COMBUSTIBLE	172.547
5.1	OXIDIZER	172.550
5.2 (Other than organic peroxide, Type B, liquid or solid, temperature controlled).	ORGANIC PEROXIDE	172.552
6.1 (PG I or II, other than PG I inhalation hazard)	POISON	172.554
6.1 (PG I or II, other than Zone A or B inhalation hazard).	POISON	172.554
6.1 (PG III)	KEEP AWAY FROM FOOD	172.553
6.2	(None)	.....
8	CORROSIVE	172.558
9	CLASS 9	172.560

TABLE 2—Continued

Category of material (Hazard class or division number and additional description, as appropriate)	Placard name	Placard design section reference (§)
ORM-D	(None)	

* * * * *

§172.505 Placarding for subsidiary hazards.

(a) Each transport vehicle, freight container, portable tank or unit load device that contains a poisonous material subject to the ''Poison-Inhalation Hazard'' shipping description of §172.203(m)(3) must be placarded with a POISON or POISON GAS placard, as appropriate, on each side and each end, in addition to any other placard required for that material in §172.504. Duplication of the POISON or POISON GAS placard is not required.

(b) In addition to the RADIOACTIVE placard which may be required by §172.504(e) of this subpart, each transport vehicle, portable tank or freight container that contains 454 kg (1001 pounds) or more gross weight of fissile or low specific activity uranium hexafluoride shall be placarded with a CORROSIVE placard on each side and each end.

(c) Each transport vehicle, portable tank, freight container or unit load device that contains a material which has a subsidiary hazard of being dangerous when wet, as defined in §173.124 of this subchapter, shall be placarded with DANGEROUS WHEN WET placards, on each side and each end, in addition to the placards required by §172.504.

(d) Hazardous materials that possess secondary hazards may exhibit subsidiary placards that correspond to the placards described in this part, even when not required by this part (see also §172.519(b) (4) of this subpart).

[Amdt. 172–123, 55 FR 52601, Dec. 21, 1990, as amended at 56 FR 66260, Dec. 20, 1991; 57 FR 45460, Oct. 1, 1992; Amdt. 172–127, 59 FR 49133, Sept. 26, 1994; Amdt. 172–151, 62 FR 1231, Jan. 8, 1997; 62 FR 39398, July 22, 1997]

EFFECTIVE DATE NOTE: By Amdt. 172–151, 62 FR 1231. Jan. 8, 1997, §172.505(a) was revised, effective Oct. 1, 1997. At 62 FR 39398, July 22, 1997, the effective date was delayed until Oct. 1, 1998. For the convenience of the user the revised text is set forth as follows:

§172.505 Placarding for subsidiary hazards.

(a) Each transport vehicle, freight container, portable tank, unit load device, or rail car that contains a poisonous material subject to the ''Poison Inhalation Hazard'' shipping description of §172.203(m)(3) must be placarded with a POISON INHALATION HAZARD or POISON GAS placard, as appropriate, on each side and each end, in addition to any other placard required for that material in §172.504. Duplication of the POISON INHALATION HAZARD or POISON GAS placard is not required.

* * * * *

§172.506 Providing and affixing placards: Highway.

(a) Each person offering a motor carrier a hazardous material for transportation by highway shall provide to the motor carrier the required placards for the material being offered prior to or at the same time the material is offered for transportation, unless the carrier's motor vehicle is already placarded for the material as required by this subpart.

(1) No motor carrier may transport a hazardous material in a motor vehicle, unless the placards required for the hazardous material are affixed thereto as required by this subpart.

(2) [Reserved]

(b) [Reserved]

[Amdt. 172–29, 41 FR 15996, Apr. 15, 1976, as amended by Amdt. 172–29A, 41 FR 40679, Sept. 20, 1976]

§172.507 Special placarding provisions: Highway.

(a) Each motor vehicle used to transport a package of highway route controlled quantity Class 7 (radioactive) materials (see §173.403 of this subchapter) must have the required RADIOACTIVE warning placard placed on a square background as described in §172.527.

(b) A nurse tank, meeting the provisions of § 173.315(m) of this subchapter, is not required to be placarded on an end containing valves, fittings, regulators or gauges when those appurtenances prevent the markings and placard from being properly placed and visible.

[Amdt. 172–103, 51 FR 5971, Feb. 18, 1986, as amended by Amdt. 172–143, 60 FR 50305, Sept. 28, 1995]

§ 172.508 Placarding and affixing placards: Rail.

(a) Each person offering a hazardous material for transportation by rail shall affix to the rail car containing the material, the placards specified by this subpart. Placards displayed on motor vehicles, transport containers, or portable tanks may be used to satisfy this requirement, if the placards otherwise conform to the provisions of this subpart.

(b) No rail carrier may accept a rail car containing a hazardous material for transportation unless the placards for the hazardous material are affixed thereto as required by this subpart.

[Amdt. 172–29, 41 FR 15996, Apr. 15, 1976, as amended by Amdt. 172–123, 55 FR 52601, Dec. 21, 1990]

§ 172.510 Special placarding provisions: Rail.

(a) *White square background.* The following must have the specified placards placed on a white square background, as described in § 172.527:

(1) Division 1.1 and 1.2 (explosive) materials which require EXPLOSIVES 1.1 or EXPLOSIVES 1.2 placards affixed to the rail car;

(2) Materials classed in Division 2.3 Hazard Zone A or 6.1 Packing Group I Hazard Zone A which require POISON GAS or POISON placards affixed to the rail car, including tank cars containing only a residue of the material; and

(3) Class DOT 113 tank cars used to transport a Division 2.1 (flammable gas) material, including tank cars containing only a residue of the material.

(b) *FUMIGATION placard.* Each transport vehicle and freight container containing lading that has been fumigated or treated with poisonous liquid, solid, or gas, and that is offered for transportation by rail must have the placard specified in § 173.9 of this subchapter affixed on or near each door.

(c) *Chemical ammunition.* Each rail car containing Division 1.1 or 1.2 (explosive) ammunition which also meets the definition of a material poisonous by inhalation (see § 171.8 of this subchapter) must be placarded EXPLOSIVES 1.1 or EXPLOSIVES 1.2 and POISON GAS or POISON.

[Amdt. 172–29, 41 FR 15996, Apr. 15, 1976, as amended by Amdt. 172–103, 51 FR 5971, Feb. 18, 1986; Amdt. 172–110, 52 FR 29528, Aug. 10, 1987; Amdt. 172–111, 52 FR 36671, Sept. 30, 1987; Amdt. 172–123, 55 FR 52601, Dec. 21, 1990; 56 FR 66260, Dec. 20, 1991; 57 FR 45460, Oct. 1, 1992; Amdt. 172–248, 61 FR 28676, June 5, 1996; Amdt. 172–151, 62 FR 1231, Jan. 8, 1997; 62 FR 39398, July 22, 1997]

EFFECTIVE DATE NOTE: By Amdt. 172–151, 62 FR 1231, Jan. 8, 1997, in § 172.510, paragraph (b) was removed, paragraph (c) was redesignated as paragraph (b), and the phrase ''POISON GAS or POISON'' was replaced with the phrase ''POISON GAS or POISON INHALATION HAZARD.'', effective Oct. 1, 1997. At 62 FR 39398, July 22, 1997 the effective date was delayed until Oct. 1, 1998.

§ 172.512 Freight containers and aircraft unit load devices.

(a) *Capacity of 640 cubic feet or more.* Each person who offers for transportation, and each person who loads and transports, a hazardous material in a freight container or aircraft unit load device having a capacity of 640 cubic feet or more shall affix to the freight container or aircraft unit load device the placards specified for the material in accordance with § 172.504. However:

(1) The placarding exception provided in § 172.504(c) applies to motor vehicles transporting freight containers and aircraft unit load devices,

(2) The placarding exception provided in § 172.504(c) applies to each freight container and aircraft unit load device being transported for delivery to a consignee immediately following an air or water shipment, and,

(3) Placarding is not required on a freight container or aircraft unit load device if it is only transported by air and is identified as containing a hazardous material in the manner provided in part 5, chapter 2, section 2.7, of the ICAO Technical Instructions.

(b) *Capacity less than 18 m³ (640 cubic feet).* Each person who offers for transportation by air, and each person who loads and transports by air, a hazardous material in a freight container or aircraft unit load device having a capacity of less than 18 m³ (640 cubic feet) shall affix one placard of the type specified by paragraph (a) of this section unless the freight container or aircraft unit load device:

(1) Is labeled in accordance with subpart E of this part, including § 172.406(e);

(2) Contains radioactive materials requiring the Radioactive Yellow III label and is placarded with one Radioactive placard and is labeled in accordance with subpart E of this part, including § 172.406(e); or,

(3) Is identified as containing a hazardous material in the manner provided in part 5, chapter 2, section 2.7, of the ICAO Technical Instructions.

When hazardous materials are offered for transportation, not involving air transportation, in a freight container having a capacity of less than 640 cubic feet the freight container need not be placarded. However, if not placarded it must be labeled in accordance with subpart E of this part.

(c) Notwithstanding paragraphs (a) and (b) of this section, packages containing hazardous materials, other than ORM–D, offered for transportation by air in freight containers are subject to the inspection requirements of § 175.30 of this chapter.

[Amdt. 172–29, 41 FR 15996, Apr. 15, 1976, as amended by Amdt. 172–29A, 41 FR 40680, Sept. 20, 1976; Amdt. 172–87, 48 FR 53712, Nov. 29, 1983; 48 FR 55469, Dec. 13, 1983; Amdt. 172–103, 51 FR 5971, Feb. 18, 1986; Amdt. 172–111, 52 FR 36671, Sept. 30, 1987; Amdt. 172–123, 55 FR 52601, Dec. 21, 1990]

§ 172.514 Bulk packagings.

(a) Except as provided in paragraph (c) of this section, each person who offers for transportation a bulk packaging which contains a hazardous material, shall affix the placards specified for the material in §§ 172.504 and 172.505.

(b) Each bulk packaging that is required to be placarded when it contains a hazardous material, must remain placarded when it is emptied, unless it is—

(1) Sufficiently cleaned of residue and purged of vapors to remove any potential hazard; or

(2) Refilled, with a material requiring different placards or no placards, to such an extent that any residue remaining in the packaging is no longer hazardous.

(c) Exceptions. The following packagings may be placarded on only two opposite sides or, alternatively, may be labeled instead of placarded in accordance with subpart E of this part:

(1) A portable tank having a capacity of less than 3,785 L (1000 gallons);

(2) A DOT 106 or 110 multi-unit tank car tank;

(3) A bulk packaging other than a portable tank, cargo tank, or tank car (e.g., a bulk bag or box) with a volumetric capacity of less than 18 m³ (640 cubic feet); and

(4) An intermediate bulk container.

[Amdt. 172–136, 59 FR 38064, July 26, 1994; Amdt. 172–148, 61 FR 50255, Sept. 25, 1996]

§ 172.516 Visibility and display of placards.

(a) Each placard on a motor vehicle and each placard on a rail car must be readily visible from the direction it faces except from the direction of another motor vehicle or rail car to which the motor vehicle or rail car is coupled. This requirement may be met by the placards displayed on the freight containers or portable tanks loaded on a motor vehicle or rail car.

(b) The required placarding of the front of a motor vehicle may be on the front of a truck-tractor instead of or in addition to the placarding on the front of the cargo body to which a truck-tractor is attached.

(c) Each placard on a transport vehicle, bulk packaging, freight container or aircraft unit load device must—

(1) Be securely attached or affixed thereto or placed in a holder thereon. (See appendix C to this part.);

(2) Be located clear of appurtenances and devices such as ladders, pipes, doors, and tarpaulins;

(3) So far as practicable, be located so that dirt or water is not directed to it from the wheels of the transport vehicle;

(4) Be located away from any marking (such as advertising) that could

substantially reduce its effectiveness, and in any case at least 3 inches (76.0 mm.) away from such marking;

(5) Have the words or identification number (when authorized) printed on it displayed horizontally, reading from left to right.

(6) Be maintained by the carrier in a condition so that the format, legibility, color, and visibility of the placard will not be substantially reduced due to damage, deterioration, or obscurement by dirt or other matter.

(7) Be affixed to a background of contrasting color, or must have a dotted or solid line outer border which contrasts with the background color.

(d) Recommended specifications for a placard holder are set forth in appendix C of this part. Except for a placard holder similar to that contained in appendix C to this part, the means used to attach a placard may not obscure any part of its surface other than the borders.

(e) A placard or placard holder may be hinged provided the required format, color, and legibility of the placard are maintained.

[Amdt. 172–29, 41 FR 15996, Apr. 15, 1976, as amended by Amdt. 172–101, 45 FR 74668, Nov. 10, 1980; Amdt. 172–123, 55 FR 52601, Dec. 21, 1990]

§ 172.519 General specifications for placards.

(a) *Strength and durability.* Placards must conform to the following:

(1) A placard may be made of any plastic, metal or other material capable of withstanding, without deterioration or a substantial reduction in effectiveness, a 30-day exposure to open weather conditions.

(2) A placard made of tagboard must be at least equal to that designated commercially as white tagboard. Tagboard must have a weight of at least 80 kg (176 pounds) per ream of 610 by 910 mm (24 by 36-inch) sheets, waterproofing materials included. In addition, each placard made of tagboard must be able to pass a 414 kPa (60 p.s.i.) Mullen test.

(3) Reflective or retroreflective materials may be used on a placard if the prescribed colors, strength and durability are maintained.

(b) *Design.* (1) Except as provided in § 172.332 of this part, each placard must be as described in this subpart, and except for size and color, the printing, inner border and symbol must be as shown in §§ 172.521 through 172.560 of this subpart, as appropriate.

(2) The dotted line border shown on each placard is not part of the placard specification. However, a dotted or solid line outer border may be used when needed to indicate the full size of a placard that is part of a larger format or is on a background of a noncontrasting color.

(3) For other than Class 7 or the OXYGEN placard, text indicating a hazard (for example, ''FLAMMABLE'') is not required.

(4) For a placard corresponding to the primary hazard class of a material, the hazard class or division number must be displayed in the lower corner of the placard. However, no hazard class or division number may be displayed on a placard corresponding to a subsidiary hazard of the material.

(c) *Size.* (1) Each placard prescribed in this subpart must measure at least 273 mm (10.8 inches) on each side and must have a solid line inner border approximately 12.7 mm (0.5 inches) from each edge.

(2) Except as otherwise provided in this subpart, the hazard class or division number, as appropriate, must be shown in numerals measuring at least 41 mm (1.6 inches) in height.

(3) Except as otherwise provided in this subpart, when text indicating a hazard is displayed on a placard, the printing must be in letters measuring at least 41 mm (1.6 inches) in height.

(d) *Color.* (1) The background color, symbol, text, numerals and inner border on a placard must be as specified in §§ 172.521 through 172.560 of this subpart, as appropriate.

(2) Black and any color on a placard must be able to withstand, without substantial change—

(i) A 72-hour fadeometer test (for a description of equipment designed for this purpose, see ASTM G 23–69 or ASTM G 26–70); and

(ii) A 30-day exposure to open weather.

(3) Upon visual examination, a color on a placard must fall within the color

tolerances displayed on the appropriate Hazardous Materials Label and Placard Color Tolerance Chart (see § 172.407(d)(4)).

(4) The placard color must extend to the inner border and may extend to the edge of the placard in the area designated on each placard except the color on the CORROSIVE and RADIOACTIVE placards (black and yellow, respectively) must extend only to the inner border.

(e) *Form identification.* A placard may contain form identification information, including the name of its maker, provided that information is printed outside of the solid line inner border in no larger than 10-point type.

(f) *Exceptions.* For a shipment under the provisions of §§ 171.11, 171.12 or § 171.12a of this subchapter, a placard conforming to specifications in the ICAO Technical Instructions, the IMDG Code, or the TDG Regulations, respectively, may be used in place of a corresponding placard which conforms to the requirements of this subpart.

(g) *Trefoil symbol.* The trefoil symbol on the RADIOACTIVE placard must meet the appropriate specification in Appendix B of this part.

[Amdt. 172–123, 55 FR 52601, Dec. 21, 1990, as amended at 56 FR 66260, Dec. 20, 1991; 57 FR 45460, Oct. 1, 1992; Amdt. 172–143, 60 FR 50305, Sept. 28, 1995]

§ 172.521 DANGEROUS placard.

(a) Except for size and color, the DANGEROUS placard must be as follows:

(b) In addition to meeting the requirements of § 172.519, and appendix B to this part, the DANGEROUS placard must have a red upper and lower triangle. The placard center area and ½-inch (12.7 mm.) border must be white. The inscription must be black with the ⅛-inch (3.2 mm.) border marker in the white area at each end of the inscription red.

[Amdt. 172–29, 41 FR 15996, Apr. 15, 76, as amended by Amdt. 172–29A, 41 FR 40680, Sept. 20, 1976]

§ 172.522 EXPLOSIVES 1.1, EXPLOSIVES 1.2 and EXPLOSIVES 1.3 placards.

(a) Except for size and color, the EXPLOSIVES 1.1, EXPLOSIVES 1.2 and EXPLOSIVES 1.3 placards must be as follows:

(b) In addition to complying with § 172.519 of this subpart, the background color on the EXPLOSIVES 1.1, EXPLOSIVES 1.2, and EXPLOSIVES 1.3 placards must be orange. The ''*'' shall be replaced with the appropriate division number and, when required, appropriate compatibility group letter. The symbol, text, numerals and inner border must be black.

[Amdt. 172–123, 55 FR 52602, Dec. 21, 1990, as amended at 56 FR 66260, Dec. 20, 1991]

§ 172.523 EXPLOSIVES 1.4 placard.

(a) Except for size and color, the EXPLOSIVES 1.4 placard must be as follows:

(b) In addition to complying with § 172.519 of this subpart, the background color on the EXPLOSIVES 1.4 placard must be orange. The ''*'' shall be replaced, when required, with the appropriate compatibility group letter. The division numeral, 1.4, must measure at least 64 mm (2.5 inches) in height. The text, numerals and inner border must be black.

[Amdt. 172–123, 55 FR 52602, Dec. 21, 1990, as amended at 56 FR 66261, Dec. 20, 1991]

§ 172.524 EXPLOSIVES 1.5 placard.

(a) Except for size and color, the EXPLOSIVES 1.5 placard must be as follows:

(b) In addition to complying with the § 172.519 of this subpart, the background color on EXPLOSIVES 1.5 placard must be orange. The ''*'' shall be replaced, when required, with the appropriate compatibility group letter. The division numeral, 1.5, must measure at least 64 mm (2.5 inches) in height. The text, numerals and inner border must be black.

[Amdt. 172–123, 55 FR 52602, Dec. 21, 1990, as amended at 56 FR 66261, Dec. 20, 1991]

§ 172.525 EXPLOSIVES 1.6 placard.

(a) Except for size and color the EXPLOSIVES 1.6 placard must be as follows:

(b) In addition to complying with § 172.519 of this subpart, the background color on the EXPLOSIVES 1.6 placard must be orange. The ''*'' shall be replaced, when required, with the appropriate compatibility group letter. The division numeral, 1.6, must measure at least 64 mm (2.5 inches) in height. The text, numerals and inner border must be black.

[Amdt. 172–123, 55 FR 52603, Dec. 21, 1990, as amended at 56 FR 66261, Dec. 20, 1991; Amdt. 172–130, 58 FR 51531, Oct. 1, 1993]

§ 172.526 [Reserved]

§ 172.527 Background requirements for certain placards.

(a) Except for size and color, the square background required by § 172.510(a) for certain placards on rail cars, and § 172.507 for placards on motor vehicles containing a package of highway route controlled quantity radioactive materials, must be as follows:

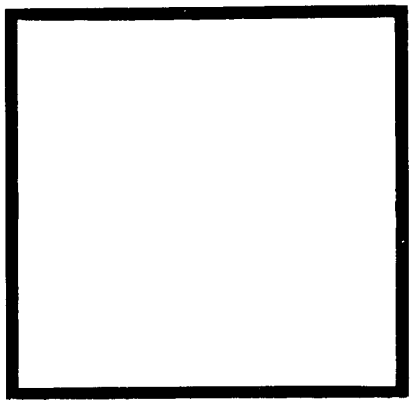

(b) In addition to meeting the requirements of §172.519 for minimum durability and strength, the square background must consist of a white square measuring 14¼ inches (362.0 mm.) on each side surrounded by a black border extending to 15¼ inches (387.0 mm.) on each side.

[Amdt. 172–29, 41 FR 15996, Apr. 15, 1976, as amended by Amdt. 172–64, 46 FR 5316, Jan. 19, 1981; Amdt. 172–78, 48 FR 10226, Mar. 10, 1983]

§172.528 NON-FLAMMABLE GAS placard.

(a) Except for size and color, the NON-FLAMMABLE GAS placard must be as follows:

(b) In addition to complying with §172.519, the background color on the NON-FLAMMABLE GAS placard must be green. The letters in both words must be at least 38 mm (1.5 inches) high. The symbol, text, class number and inner border must be white.

[Amdt. 172–123, 56 FR 66261, Dec. 20, 1991]

§172.530 OXYGEN placard.

(a) Except for size and color, the OXYGEN placard must be as follows:

(b) In addition to complying with §172.519 of this subpart, the background color on the OXYGEN placard must be yellow. The symbol, text, class number and inner border must be black.

[Amdt. 172–123, 56 FR 66262, Dec. 20, 1991]

§172.532 FLAMMABLE GAS placard.

(a) Except for size and color, the FLAMMABLE GAS placard must be as follows:

(b) In addition to complying with §172.519, the background color on the

FLAMMABLE GAS placard must be red. The symbol, text, class number and inner border must be white.

[Amdt. 172–123, 56 FR 66262, Dec. 20, 1991]

§ 172.536 [Reserved]

§ 172.540 POISON GAS placard.

(a) Except for size and color, the POISON GAS placard must be as follows:

(b) In addition to complying with § 172.519, the background color on the POISON GAS placard must be white. The symbol, text, class number and inner border must be black. The words ''TOXIC GAS'' may be used in lieu of the words ''POISON GAS''.

[Amdt. 172–123, 56 FR 66262, Dec. 20, 1991, as amended by Amdt. 172–139, 59 FR 67490, Dec. 29, 1994]

EFFECTIVE DATE NOTE: At 62 FR 39408, July 22, 1997, § 172.540 was revised effective Oct. 1, 1998. For the convenience of the user the revised text is set forth as follows:

§ 172.540 POISON GAS placard.

(a) Except for size and color, the POISON GAS placard must be as follows:

INHALATION
HAZARD
2

(b) In addition to complying with § 172.519, the background on the POISON GAS placard and the symbol must be white. The background of the upper diamond must be black and the lower point of the upper diamond must be 65 mm (2⅝ inches) above the horizontal center line. The text, class number, and inner border must be black.

[62 FR 39408, July 22, 1997]

§ 172.542 FLAMMABLE placard.

(a) Except for size and color, the FLAMMABLE placard must be as follows:

(b) In addition to complying with § 172.519, the background color on the FLAMMABLE placard must be red. The symbol, text, class number and inner border must be white.

(c) The word ''GASOLINE'' may be used in place of the word ''FLAMMABLE'' on a placard that is displayed on a cargo tank or a portable tank being used to transport gasoline by highway. The word ''GASOLINE'' must be shown in white.

[Amdt. 172–123, 56 FR 66262, Dec. 20, 1991]

§ 172.544 COMBUSTIBLE placard.

(a) Except for size and color, the COMBUSTIBLE placard must be as follows:

(b) In addition to complying with § 172.519, the background color on the COMBUSTIBLE placard must be red. The symbol, text, class number and inner border must be white. On a COMBUSTIBLE placard with a white bottom as prescribed by § 172.332(c)(4), the class number must be red or black.

(c) The words ''FUEL OIL'' may be used in place of the word ''COMBUSTIBLE'' on a placard that is displayed on a cargo tank or portable tank being used to transport by highway fuel oil that is not classed as a flammable liquid. The words ''FUEL OIL'' must be white.

[Amdt. 172–123, 56 FR 66262, Dec. 20, 1991]

§ 172.555 POISON INHALATION HAZARD placard.

(a) Except for size and color, the POISON INHALATION HAZARD placard must be as follows:

(b) In addition to complying with §172.519, the background on the POISON INHALATION HAZARD placard and the symbol must be white. The background of the upper diamond must be black and the lower point of the upper diamond must be 65 mm (2⅝ inches) above the horizontal center line. The text, class number, and inner border must be black.

[62 FR 39409, July 22, 1997.]

EFFECTIVE DATE NOTE: At 62 FR 39409, July 22, 1997, §172.555, as added by Amdt. 172–151, 62 FR 1233, Jan. 8, 1997, effective Oct. 1, 1998 was revised, effective Oct. 1, 1998.

§172.546 FLAMMABLE SOLID placard.

(a) Except for size and color, the FLAMMABLE SOLID placard must be as follows:

(b) In addition to complying with § 172.519, the background on the FLAMMABLE SOLID placard must be white with seven vertical red stripes. The stripes must be equally spaced, with one red stripe placed in the center of the label. Each red stripe and each white space between two red stripes must be 25 mm (1.0 inches) wide. The letters in the word ''SOLID'' must be at least 38.1 mm (1.5 inches) high. The symbol, text, class number and inner border must be black.

[Amdt. 172–123, 56 FR 66263, Dec. 20, 1991]

§ 172.547 SPONTANEOUSLY COMBUSTIBLE placard.

(a) Except for size and color, the SPONTANEOUSLY COMBUSTIBLE placard must be as follows:

(b) In addition to complying with § 172.519, the background color on the SPONTANEOUSLY COMBUSTIBLE placard must be red in the lower half and white in upper half. The letters in the word ''SPONTANEOUSLY'' must be at least 12 mm (0.5 inch) high. The symbol, text, class number and inner border must be black.

[Amdt. 172–123, 56 FR 66263, Dec. 20, 1991, as amended by Amdt. 172–139, 59 FR 67490, Dec. 29, 1994]

§ 172.548 DANGEROUS WHEN WET placard.

(a) Except for size and color, the DANGEROUS WHEN WET placard must be as follows:

(b) In addition to complying with §172.519, the background color on the DANGEROUS WHEN WET placard must be blue. The letters in the words ''WHEN WET'' must be at least 25 mm (1.0 inches) high. The symbol, text, class number and inner border must be white.

[Amdt. 172–123, 56 FR 66263, Dec. 20, 1991]

§172.550 OXIDIZER placard.

(a) Except for size and color, the OXIDIZER placard must be as follows:

(b) In addition to complying with §172.519, the background color on the OXIDIZER placard must be yellow. The symbol, text, division number and inner border must be black.

[Amdt. 172–123, 56 FR 66263, Dec. 20, 1991]

§172.552 ORGANIC PEROXIDE placard.

(a) Except for size and color, the ORGANIC PEROXIDE placard must be as follows:

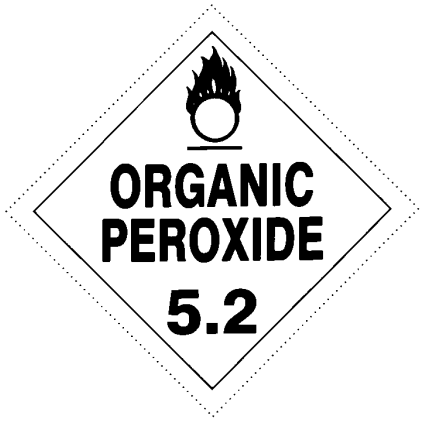

(b) In addition to complying with §172.519, the background color on the ORGANIC PEROXIDE placard must be yellow. The symbol, text, division number and inner border must be black.

[Amdt. 172–123, 56 FR 66263, Dec. 20, 1991]

§172.553 KEEP AWAY FROM FOOD placard.

(a) Except for size and color, the KEEP AWAY FROM FOOD placard must be as follows:

(b) In addition to complying with §172.519, the background on the KEEP AWAY FROM FOOD placard must be white. The size of the lettering below the word ''HARMFUL'' must be proportional to that shown. The symbol, text,

class number and inner border must be black.

[Amdt. 172–123, 56 FR 66263, Dec. 20, 1991]

§ 172.554 POISON placard.

(a) Except for size and color, the POISON placard must be as follows:

(b) In addition to complying with § 172.519, the background on the POISON placard must be white. The symbol, text, class number and inner border must be black. The word ''TOXIC'' may be used in lieu of the word ''POISON''.

[Amdt. 172–123, 56 FR 66264, Dec. 20, 1991, as amended by Amdt. 172–139, 59 FR 67490, Dec. 29, 1994]

§ 172.556 RADIOACTIVE placard.

(a) Except for size and color, the RADIOACTIVE placard must be as follows:

(b) In addition to complying with § 172.519, the background color on the RADIOACTIVE placard must be white in the lower portion with a yellow triangle in the upper portion. The base of the yellow triangle must be 29 mm ± 5 mm (1.1 inches ±0.2 inches) above the placard horizontal center line. The symbol, text, class number and inner border must be black.

[Amdt. 172–123, 56 FR 66264, Dec. 20, 1991; Amdt. 172–130, 58 FR 51531, Oct. 1, 1993]

§ 172.558 CORROSIVE placard.

(a) Except for size and color, the CORROSIVE placard must be as follows:

(b) In addition to complying with § 172.519, the background color on the

CORROSIVE placard must be black in the lower portion with a white triangle in the upper portion. The base of the white triangle must be 38 mm ± 5 mm (1.5 inches ± 0.2 inches) above the placard horizontal center line. The text and class number must be white. The symbol and inner border must be black.

[Amdt. 172–123, 56 FR 66264, Dec. 20, 1991]

§ 172.560 CLASS 9 placard.

(a) Except for size and color the CLASS 9 (miscellaneous hazardous materials) placard must be as follows:

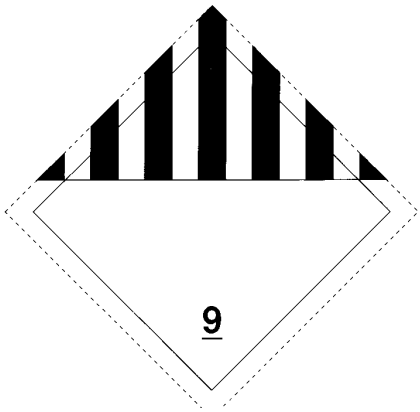

(b) In addition to conformance with § 172.519, the background on the CLASS 9 placard must be white with seven black vertical stripes on the top half extending from the top of the placard to one inch above the horizontal centerline. The black vertical stripes must be spaced so that, visually, they appear equal in width to the six white spaces between them. The space below the vertical lines must be white with the class number 9 underlined and centered at the bottom.

[Amdt. 172–123, 56 FR 66264, Dec. 20, 1991, as amended at 57 FR 45460, Oct. 1, 1992]

Subpart G—Emergency Response Information

§ 172.600 Applicability and general requirements.

(a) *Scope.* Except as provided in paragraph (d) of this section, this subpart prescribes requirements for providing and maintaining emergency response information during transportation and at facilities where hazardous materials are loaded for transportation, stored incidental to transportation or otherwise handled during any phase of transportation.

(b) *Applicability.* This subpart applies to persons who offer for transportation, accept for transportation, transfer or otherwise handle hazardous materials during transportation.

(c) *General requirements.* No person to whom this subpart applies may offer for transportation, accept for transportation, transfer, store or otherwise handle during transportation a hazardous material unless:

(1) Emergency response information conforming to this subpart is immediately available for use at all times the hazardous material is present; and

(2) Emergency response information, including the emergency response telephone number, required by this subpart is immediately available to any person who, as a representative of a Federal, State or local government agency, responds to an incident involving a hazardous material, or is conducting an investigation which involves a hazardous material.

(d) *Exceptions.* The requirements of this subpart do not apply to hazardous material which is excepted from the shipping paper requirements of this subchapter or a material properly classified as an ORM–D.

[Amdt. 172–116, 54 FR 27145, June 27, 1989; 54 FR 28750, July 5, 1989, as amended at 55 FR 33712, Aug. 17, 1990; 172–127, 59 FR 49133, Sept. 26, 1994; Amdt. 172–149, 61 FR 27173, May 30, 1996]

§ 172.602 Emergency response information.

(a) *Information required.* For purposes of this subpart, the term ''emergency response information'' means information that can be used in the mitigation of an incident involving hazardous materials and, as a minimum, must contain the following information:

(1) The basic description and technical name of the hazardous material as required by §§ 172.202 and 172.203(k), the ICAO Technical Instructions, the IMDG Code, or the TDG Regulations, as appropriate;

(2) Immediate hazards to health;

(3) Risks of fire or explosion;

(4) Immediate precautions to be taken in the event of an accident or incident;

(5) Immediate methods for handling fires;

(6) Initial methods for handling spills or leaks in the absence of fire; and

(7) Preliminary first aid measures.

(b) *Form of information.* The information required for a hazardous material by paragraph (a) of this section must be:

(1) Printed legibly in English;

(2) Available for use away from the package containing the hazardous material; and

(3) Presented—

(i) On a shipping paper;

(ii) In a document, other than a shipping paper, that includes both the basic description and technical name of the hazardous material as required by §§ 172.202 and 172.203(k), the ICAO Technical Instructions, the IMDG Code, or the TDG Regulations, as appropriate, and the emergency response information required by this subpart (e.g., a material safety data sheet); or

(iii) Related to the information on a shipping paper, a written notification to pilot-in-command, or a dangerous cargo manifest, in a separate document (e.g., an emergency response guidance document), in a manner that cross-references the description of the hazardous material on the shipping paper with the emergency response information contained in the document. Aboard aircraft, the ICAO ''Emergency Response Guidance for Aircraft Incidents Involving Dangerous Goods'' and, aboard vessels, the IMO ''Emergency Procedures for Ships Carrying Dangerous Goods'', or equivalent documents, may be used to satisfy the requirements of this section for a separate document.

(c) *Maintenance of information.* Emergency response information shall be maintained as follows:

(1) *Carriers.* Each carrier who transports a hazardous material shall maintain the information specified in paragraph (a) of this section in the same manner as prescribed for shipping papers, except that the information must be maintained in the same manner aboard aircraft as the notification to pilot-in-command, and aboard vessels in the same manner as the dangerous cargo manifest. This information must be immediately accessible to train crew personnel, drivers of motor vehicles, flight crew members, and bridge personnel on vessels for use in the event of incidents involving hazardous materials.

(2) *Facility operators.* Each operator of a facility where a hazardous material is received, stored or handled during transportation, shall maintain the information required by paragraph (a) of this section whenever the hazardous material is present. This information must be in a location that is immediately accessible to facility personnel in the event of an incident involving the hazardous material.

[Amdt. 172–116, 54 FR 27146, June 27, 1989; 54 FR 28750, July 5, 1989, as amended by Amdt. 172–116, 55 FR 875, Jan. 10, 1990]

EFFECTIVE DATE NOTE: By Amdt. 172–151, 62 FR 1234, Jan. 8, 1997, § 172.602(c)(1) was revised, effective Oct. 1, 1997. At 62 FR 39398, July 22, 1997, the effective date was delayed until Oct. 1, 1998. For the convenience of the user the revised text is set forth as follows:

§ 172.602 Emergency response information.

* * * * *

(c) * * *

(1) *Carriers.* Each carrier who transports a hazardous material shall maintain the information specified in paragraph (a) of this section and § 172.606 of this part in the same manner as prescribed for shipping papers, except that the information must be maintained in the same manner aboard aircraft as the notification of pilot-in-command, and aboard vessels in the same manner as the dangerous cargo manifest. This information must be immediately accessible to train crew personnel, drivers of motor vehicles, flight crew members, and bridge personnel on vessels for use in the event of incidents involving hazardous materials.

* * * * *

§ 172.604 Emergency response telephone number.

(a) A person who offers a hazardous material for transportation must provide a 24-hour emergency response telephone number (including the area code or international access code) for use in the event of an emergency involving the hazardous material. The telephone number must be—

(1) Monitored at all times the hazardous material is in transportation, including storage incidental to transportation;

(2) The number of a person who is either knowledgeable of the hazardous material being shipped and has comprehensive emergency response and incident mitigation information for that material, or has immediate access to a person who possesses such knowledge and information; and

(3) Entered on a shipping paper, as follows:

(i) Immediately following the description of the hazardous material required by subpart C of this part; or

(ii) Entered once on the shipping paper in a clearly visible location. This provision may be used only if the telephone number applies to each hazardous material entered on the shipping paper, and if it is indicated that the telephone number is for emergency response information (for example: ''EMERGENCY CONTACT: * * *).

(b) The telephone number required by paragraph (a) of this section must be the number of the person offering the hazardous material for transportation or the number of an agency or organization capable of, and accepting responsibility for, providing the detailed information concerning the hazardous material. A person offering a hazardous material for transportation who lists the telephone number of an agency or organization shall ensure that agency or organization has received current information on the material, as required by paragraph (a)(2) of this section before it is offered for transportation.

(c) The requirements of this section do not apply to—

(1) Hazardous materials that are offered for transportation under the provisions applicable to limited quantities; and

(2) Materials properly described under the shipping names ''Engines, internal combustion'', ''Battery powered equipment'', ''Battery powered vehicle'', Wheelchair, electric'', ''Carbon dioxide, solid'', ''Dry ice'', ''Fish meal, stabilized'', ''Fish scrap, stabilized'', ''Castor bean'', ''Castor meal'', ''Castor flake'', ''Castor pomace'', or ''Refrigerating machine''.

[Amdt. 172–116, 54 FR 27145, June 27, 1989, as amended at 55 FR 33713, Aug. 17, 1990; Amdt. 172–127, 59 FR 49133, Sept. 26, 1994; Amdt. 172–149, 61 FR 27173, May 30, 1996]

§ 172.606 Carrier information contact.

Each carrier who transports or accepts for transportation a hazardous material for which a shipping paper is required—

(a) Shall instruct the operator of a motor vehicle, train, aircraft, or vessel to contact the carrier (e.g., by telephone or mobile radio) in the event of an incident involving the hazardous material.

(b) For transportation by highway, if a transport vehicle, (e.g., a semi-trailer or freight container-on-chassis) contains hazardous material for which a shipping paper is required and the vehicle is separated from its motive power and parked at a location other than a consignee's, consignor's, or carrier's facility, the carrier shall—

(1) Comply with the emergency response information requirements for facility operators specified in § 172.602(c)(2);

(2) Mark the transport vehicle with the telephone number of the motor carrier on the front of the transport vehicle near the brake hose and electrical connections; or

(3) Have the shipping paper and emergency response information readily available on the transport vehicle.

(c) The requirements specified in paragraph (b) of this section do not apply to an unattended motor vehicle separated from its motive power when the motor vehicle is marked on an orange panel, a placard, or a plain white square-on-point configuration with the identification number of each hazardous material loaded therein, and the marking or placard is visible on the outside of the motor vehicle.

[Amdt. 172–151, 62 FR 1234, Jan. 8, 1997, as amended at 62 FR 39398 and 39409, July 22, 1997]

EFFECTIVE DATE NOTE: By Amdt. 172–151, 62 FR 1234, Jan. 8, 1997 § 172.606 was added, effective Oct. 1, 1997. At 62 FR 39398 and 39409, the effective date was delayed until Oct. 1, 1998 and paragraph (c) was added, effective Oct. 1, 1998.

Subpart H—Training

SOURCE: Amdt. 172–126, 57 FR 20952, May 15, 1992, unless otherwise noted.

§ 172.700 Purpose and scope.

(a) *Purpose.* This subpart prescribes requirements for training hazmat employees.

(b) *Scope.* Training as used in this subpart means a systematic program that ensures a hazmat employee has familiarity with the general provisions of this subchapter, is able to recognize and identify hazardous materials, has knowledge of specific requirements of this subchapter applicable to functions performed by the employee, and has knowledge of emergency response information, self-protection measures and accident prevention methods and procedures (see § 172.704).

(c) *Modal-specific training requirements.* Additional training requirements for the individual modes of transportation are prescribed in parts 174, 175, 176, and 177 of this subchapter.

§ 172.701 Federal–State relationship.

This subpart and the parts referenced in § 172.700(c) prescribe minimum training requirements for the transportation of hazardous materials. For motor vehicle drivers, however, a State may impose more stringent training requirements only if those requirements—

(a) Do not conflict with the training requirements in this subpart and in part 177 of this subchapter; and

(b) Apply only to drivers domiciled in that State.

§ 172.702 Applicability and responsibility for training and testing.

(a) A hazmat employer shall ensure that each of its hazmat employees is trained in accordance with the requirements prescribed in this subpart.

(b) Except as provided in § 172.704(c)(1), a hazmat employee who performs any function subject to the requirements of this subchapter may not perform that function unless instructed in the requirements of this subchapter that apply to that function. It is the duty of each hazmat employer to comply with the applicable requirements of this subchapter and to thoroughly instruct each hazmat employee in relation thereto.

(c) Training may be provided by the hazmat employer or other public or private sources.

(d) A hazmat employer shall ensure that each of its hazmat employees is tested by appropriate means on the training subjects covered in §172.704.

[Amdt. 172–126, 57 FR 20952, May 15, 1992; 57 FR 22182, May 27, 1992, as amended by Amdt. 172–149, 61 FR 27173, May 30, 1996]

§ 172.704 Training requirements.

(a) Hazmat employee training shall include the following:

(1) *General awareness/familiarization training.* Each hazmat employee shall be provided general awareness/familiarization training designed to provide familiarity with the requirements of this subchapter, and to enable the employee to recognize and identify hazardous materials consistent with the hazard communication standards of this subchapter.

(2) *Function-specific training.* (i) Each hazmat employee shall be provided function-specific training concerning requirements of this subchapter, or exemptions issued under subchapter A of this chapter, which are specifically applicable to the functions the employee performs.

(ii) As an alternative to function-specific training on the requirements of this subchapter, training relating to the requirements of the ICAO Technical Instructions and the IMDG Code may be provided to the extent such training addresses functions authorized by §§ 171.11 and 171.12 of this subchapter.

(3) *Safety training.* Each hazmat employee shall receive safety training concerning—

(i) Emergency response information required by subpart G of part 172;

(ii) Measures to protect the employee from the hazards associated with hazardous materials to which they may be exposed in the work place, including specific measures the hazmat employer has implemented to protect employees from exposure; and

(iii) Methods and procedures for avoiding accidents, such as the proper procedures for handling packages containing hazardous materials.

(b) *OSHA or EPA Training.* Training conducted by employers to comply with the hazard communication programs required by the Occupational Safety and Health Administration (OSHA) of the Department of Labor (29 CFR 1910.120) or the Environmental Protection Agency (EPA) (40 CFR 311.1), to the extent that training addresses the training specified in paragraph (a) of this section, may be used to satisfy the training requirements in paragraph (a) of this section, in order to avoid unnecessary duplication of training.

(c) *Initial and recurrent training*—(1) *Initial training.* A new hazmat employee, or a hazmat employee who changes job functions may perform those functions prior to the completion of training provided—

(i) The employee performs those functions under the direct supervision of a properly trained and knowledgeable hazmat employee; and

(ii) The training is completed within 90 days after employment or a change in job function.

(2) *Recurrent training.* A hazmat employee shall receive the training required by this subpart at least once every three years.

(3) *Relevant Training.* Relevant training received from a previous employer or other source may be used to satisfy the requirements of this subpart provided a current record of training is obtained from hazmat employees' previous employer.

(4) *Compliance.* Each hazmat employer is responsible for compliance with the requirements of this subchapter regardless of whether the training required by this subpart has been completed.

(d) *Recordkeeping.* A record of current training, inclusive of the preceding three years, in accordance with this section shall be created and retained by each hazmat employer for as long as that employee is employed by that employer as a hazmat employee and for 90 days thereafter. The record shall include:

(1) The hazmat employee's name;

(2) The most recent training completion date of the hazmat employee's training;

(3) A description, copy, or the location of the training materials used to meet the requirements in paragraph (a) of this section;

(4) The name and address of the person providing the training; and

(5) Certification that the hazmat employee has been trained and tested, as required by this subpart.

(e) *Limitation.* A hazmat employee who repairs, modifies, reconditions, or tests packagings as qualified for use in the transportation of hazardous materials, and who does not perform any other function subject to the requirements of this subchapter, is not subject to the safety training requirement of paragraph (a)(3) of this section.

[Amdt. 172–126, 57 FR 20952, May 15, 1992, as amended by Amdt. 172–126, 58 FR 5851, Jan. 22, 1993; Amdt. 172–145, 60 FR 49110, Sept. 21, 1995; Amdt. 172–149, 61 FR 27173, May 30, 1996]

APPENDIX A TO PART 172—OFFICE OF HAZARDOUS MATERIALS TRANSPORTATION COLOR TOLERANCE CHARTS AND TABLES

The following are Munsell notations and Commission Internationale de L'Eclairage (CIE) coordinates which describe the Office of Hazardous Materials Transportation Label and Placard Color Tolerance Charts in Tables 1 and 2, and the CIE coordinates for the color tolerances specified in Table 3. Central colors and tolerances described in Table 2 approximate those described in Table 1 while allowing for differences in production methods and materials used to manufacture labels and placards surfaced with printing inks. Primarily, the color charts based on Table 1 are for label or placard colors applied as opaque coatings such as paint, enamel or plastic, whereas color charts based on Table 2 are intended for use with labels and placards surfaced only with inks.

For labels printed directly on packaging surfaces, Table 3 may be used, although compliance with either Table 1 or Table 2 is sufficient. However, if visual reference indicates that the colors of labels printed directly on package surfaces are outside the Table 1 or 2 tolerances, a spectrophotometer or other instrumentation may be required to insure compliance with Table 3.

TABLE 1.—SPECIFICATIONS FOR COLOR TOLERANCE CHARTS FOR USE WITH LABELS AND PLACARDS SURFACED WITH PAINT, LACQUER, ENAMEL, PLASTIC, OTHER OPAQUE COATINGS, OR INK [1]

Color	Munsell notations	CIE data for source C		
		Y	x	y
Red:				
Central color	7.5R 4.0/14	12.00	.5959	3269
Orange	8.5R 4.0/14	12.00	.6037	3389
Purple and vivid	6.5R 4.0/14	12.00	.5869	.3184
Grayish	7.5R 4.0/12	12.00	.5603	.3321
Vivid	7.5R 4.0/16	12.00	.6260	.3192
Light	7.5R 4.5/14	15.57	.5775	.3320
Dark	7. 5R 3.5/14	09.00	.6226	.3141
Orange:				
Central color	5.OYR 6.0/15	30.05	.5510	.4214
Yellow and Grayish	6.25YR 6.0/15	30.05	.5452	.4329
Red and vivid	3.75YR 6.0/15	30.05	.5552	.4091
Grayish	5.OYR 6.0/13	30.05	.5311	.4154
Vivid	5.OYR 6.0/16	30.05	.5597	.4239
Light	5.OYR 6.5/15	36.20	.5427	.4206
Dark	5.OYR 5.5/15	24.58	.5606	.4218
Yellow:				
Central color	5.OY 8.0/12	59.10	.4562	.4788
Green	6.5Y 8.0/12	59.10	.4498	.4865
Orange and vivid	3.5Y 8.0/12	59.10	.4632	.4669
Grayish	5.OY 8.0/10	59.10	.4376	.4601
Vivid	5.OY 8.0/14	59.10	.4699	.4920
Light	5.OY 8.5/12	68.40	.4508	.4754
Dark	5.OY 7.5/12	50.68	.4620	.4823
Green:				
Central color	7.5G 4.0/9	12.00	.2111	.4121
Bluish	0.5BG 4.0/9	12.00	.1974	.3809
Green-yellow	5.0G 4.0/9	12.00	2237	.4399
Grayish A	7.5G 4.0/7	12.00	.2350	.3922
Grayish B [2]	7.5G 4.0/6	12.00	.2467	.3822
Vivid	7.5G 4.0/11	12.00	.1848	.4319
Light	7.5G 4.5/9	15.57	.2204	.4060
Dark	7.5G 3.5/9	09.00	.2027	.4163
Blue:				
Central color	2.5PB 3.5/10	09.00	.1691	.1744
Purple	4.5PB 3.5/10	09.00	.1796	.1711
Green and vivid	10.0B 3.5/10	09.00	.1557	.1815
Grayish	2.5PB 3.5/8	09.00	.1888	.1964
Vivid	2.5PB 3.5/12	09.00	.1516	.1547
Light	2.5PB 4.0/10	12.00	.1805	.1888
Dark	2.5PB 3.0/10	06.55	.1576	.1600
Purple:				
Central color	10.0P 4.5/10	15.57	.3307	.2245
Reddish purple	2.5RP 4.5/10	15.57	.3584	.2377
Blue purple	7.5P 4.5/10	15.57	.3068	.2145
Reddish gray	10.0P 4.5/8	15.57	.3280	.2391
Gray [2]	10.0P 4.5/6.5	15.57	.3254	.2519
Vivid	10.0P 4.5/12	15.57	.3333	.2101
Light	10.0P 5.0/10	19.77	.3308	.2328
Dark	10.0P 4.0/10	12.00	.3306	.2162

[1] Maximum chroma is not limited.

[2] For the colors green and purple, the minimum saturation (chroma) limits for porcelain enamel on metal are lower than for most other surface coatings. Therefore, the minimum chroma limits of these two colors as displayed on the Charts for comparison to porcelain enamel on metal is low, as shown for green (grayish B) and purple (gray).

NOTE: CIE=Commission Internationale de L'Eclairage.

TABLE 2.—SPECIFICATIONS FOR COLOR TOLERANCE CHARTS FOR USE WITH LABELS AND PLACARDS SURFACED WITH INK

Color/series	Munsell notation	CIE data for source C		
		Y	x	y
Red:				
Central series:				
Central color	6.8R 4.47/12.8	15.34	.5510	.3286
Grayish	7.2R 4.72/12.2	17.37	.5368	.3348
Purple	6.4R 4.49/12.7	15.52	.5442	.3258
Purple and vivid	6.1R 4.33/13.1	14.25	.5529	.3209

TABLE 2.—SPECIFICATIONS FOR COLOR TOLERANCE CHARTS FOR USE WITH LABELS AND PLACARDS SURFACED WITH INK—Continued

Color/series	Munsell notation	CIE data for source C		
		Y	x	y
Vivid	6.7R 4.29/13.2	13.99	.5617	.3253
Orange	7.3R 4.47/12.8	15.34	.5572	.3331
Orange and grayish	7.65R 4.70/12.4	17.20	.5438	.3382
Light series:				
Light	7.0R 4.72/13.2	17.32	.5511	.3322
Light and orange	7.4R 4.96/12.6	19.38	.5365	.3382
Light and purple	6.6R 4.79/12.9	17.94	.5397	.3289
Dark series:				
Dark A	6.7R 4.19/12.5	13.30	.5566	.3265
Dark B	7.0R 4.25/12.35	13.72	.5522	.3294
Dark and purple	7.5R 4.23/12.4	13.58	.5577	.3329
Orange:				
Central series:				
Central color	5.0YR 6.10/12.15	31.27	.5193	.4117
Yellow and grayish A	5.8YR 6.22/11.7	32.69	.5114	.4155
Yellow and grayish B	6.1YR 6.26/11.85	33.20	.5109	.4190
Vivid	5.1YR 6.07/12.3	30.86	.5226	.4134
Red and vivid A	3.9YR 5.87/12.75	28.53	.5318	.4038
Red and vivid B	3.6YR 5.91/12.6	29.05	.5291	.4021
Grayish	4.9YR 6.10/11.9	31.22	.5170	.4089
Light series:				
Light and vivid A	5.8YR 6.78/12.7	39.94	.5120	.4177
Light and yellow	6.0YR 6.80/12.8	40.20	.5135	.4198
Light and vivid B	4.9YR 6.60/12.9	37.47	.5216	.4126
Dark series:				
Dark and yellow	5.8YR 5.98/11.0	29.87	.5052	.4132
Dark A	5.1YR 5.80/11.1	27.80	.5127	.4094
Dark B	5.0YR 5.80/11.0	27.67	.5109	.4068
Yellow:				
Central series:				
Central color	4.3Y 7.87/10.3	56.81	.4445	.4589
Vivid A	4.5Y 7.82/10.8	55.92	.4503	.4658
Vivid B	3.3Y 7.72/11.35	54.24	.4612	.4624
Vivid and orange	3.2Y 7.72/10.8	54.25	.4576	.4572
Grayish A	4.1Y 7.95/9.7	58.18	.4380	.4516
Grayish B	5.1Y 8.06/9.05	60.12	.4272	.4508
Green-yellow	5.2Y 7.97/9.9	58.53	.4356	.4605
Light series:				
Light	5.4Y 8.59/10.5	70.19	.4351	.4628
Light and green-yellow	5.4Y 8.56/11.2	69.59	.4414	.4692
Light and vivid	4.4Y 8.45/11.4	67.42	.4490	.4662
Dark series:				
Dark and green-yellow	4.4Y 7.57/9.7	51.82	.4423	.4562
Dark and orange A	3.4Y 7.39/10.4	48.86	.4584	.4590
Dark and orange B	3.5Y 7.41/10.0	49.20	.4517	.4544
Green:				
Central series:				
Central color	9.75G 4.26/7.75	13.80	.2214	.3791
Grayish	10G 4.46/7.5	15.25	.2263	.3742
Blue A	1.4BG 4.20/7.4	13.36	.2151	.3625
Blue B	1.0BG 4.09/7.75	12.60	.2109	.3685
Vivid	8.4G 4.09/8.05	12.59	.2183	.3954
Vivid green-yellow	7.0G 4.23/8.0	13.54	.2292	.4045
Green-yellow	7.85G 4.46/7.7	15.23	.2313	.3914
Light series:				
Light and vivid	9.5G 4.45/8.8	15.21	.2141	.3863
Light and blue	0.2BG 4.31/8.8	14.12	.2069	.3814
Light and green-yellow	8.3G 4.29/9.05	14.01	.2119	.4006
Dark series:				
Dark and green-yellow	7.1G 4.08/7.1	12.55	.2354	.3972
Dark and grayish	9.5G 4.11/6.9	12.70	.2282	.3764
Dark	8.5G 3.97/7.2	11.78	.2269	.3874
Blue:				
Central series:				
Central color	3.5PB 3.94/9.7	11.58	.1885	.1911
Green and grayish A	2.0PB 4.35/8.7	14.41	.1962	.2099
Green and grayish B	1.7PB 4.22/9.0	13.50	.1898	.2053
Vivid	2.9PB 3.81/9.7	10.78	.1814	.1852
Purple and vivid A	4.7PB 3.53/10.0	9.15	.1817	.1727

TABLE 2.—SPECIFICATIONS FOR COLOR TOLERANCE CHARTS FOR USE WITH LABELS AND PLACARDS SURFACED WITH INK—Continued

Color/series	Munsell notation	CIE data for source C		
		Y	x	y
Purple and vivid B	5.0PB 3.71/9.9	10.20	.1888	.1788
Grayish	3.75PB 4.03/9.1	12.17	.1943	.1961
Light series:				
Light and green A	1.7PB 4.32/9.2	14.22	.1904	.2056
Light and green B	1.5PB 4.11/9.6	12.72	.1815	.1971
Light and vivid	3.2PB 3.95/10.05	11.70	.1831	.1868
Dark series:				
Dark and grayish	3.9PB 4.01/8.7	12.04	.1982	.1992
Dark and purple A	4.8PB 3.67/9.3	9.95	.1918	.1831
Dark and purple B	5.2PB 3.80/9.05	10.76	.1985	.1885
Purple:				
Central series:				
Central color	9.5P 4.71/11.3	17.25	.3274	.2165
Red	1.0RP 5.31/10.8	22.70	.3404	.2354
Red and vivid A	1.4RP 5.00/11.9	19.78	.3500	.2274
Red and vivid B	0.2RP 4.39/12.5	14.70	.3365	.2059
Vivid	8.0P 4.04/12.0	12.23	.3098	.1916
Blue	7.0P 4.39/10.8	14.71	.3007	.2037
Grayish	8.8P 5.00/10.3	19.73	.3191	.2251
Light series:				
Light and red A	0.85RP 5.56/11.1	25.18	.3387	.2356
Light and red B	1.1RP 5.27/12.3	22.27	.3460	.2276
Light and vivid	9.2P 4.94/11.95	19.24	.3247	.2163
Dark series:				
Dark and grayish	9.6P 4.70/10.9	17.19	.3283	.2204
Dark and vivid	8.4P 4.05/11.6	12.35	.3144	.1970
Dark and blue	7.5P 4.32/10.5	14.19	.3059	.2078

TABLE 3.—SPECIFICATION FOR COLORS FOR USE WITH LABELS PRINTED ON PACKAGINGS SURFACES

CIE data for source C	Red	Orange	Yellow	Green	Blue	Purple
x	.424	.460	.417	.228	.200	.377
y	.306	.370	.392	.354	.175	.205
x	.571	.543	.490	.310	.255	.377
y	.306	.400	.442	.354	.250	.284
x	.424	.445	.390	.228	.177	.342
y	.350	.395	.430	.403	.194	.205
x	.571	.504	.440	.310	.230	.342
y	.350	.430	.492	.403	.267	.284
Y (high)	23.0	41.6	72.6	20.6	15.9	21.2
Y (low)	7.7	19.5	29.1	7.4	6.5	8.2

[Amdt. 172–50, 44 FR 9757, Feb. 15, 1979; Amdt. 172–50, 44 FR 10984, Feb. 26, 1979, as amended by Amdt. 172–50, 44 FR 22467, Apr. 16, 1979; 50 FR 45731, Nov. 1, 1985; Amdt. 172–127, 59 FR 49133, Sept. 26, 1994]

APPENDIX B TO PART 172—TREFOIL SYMBOL

SOURCE: 60 FR 50306, Sept. 28, 1995, unless otherwise noted.

1. Except as provided in paragraph 2 of this appendix, the trefoil symbol required for RADIOACTIVE labels and placards and required to be marked on certain packages of Class 7 materials must conform to the design and size requirements of this appendix.

2. RADIOACTIVE labels and placards that were printed prior to April 1, 1996, in conformance with the requirements of this subchapter in effect on March 30, 1996, may continue to be used.

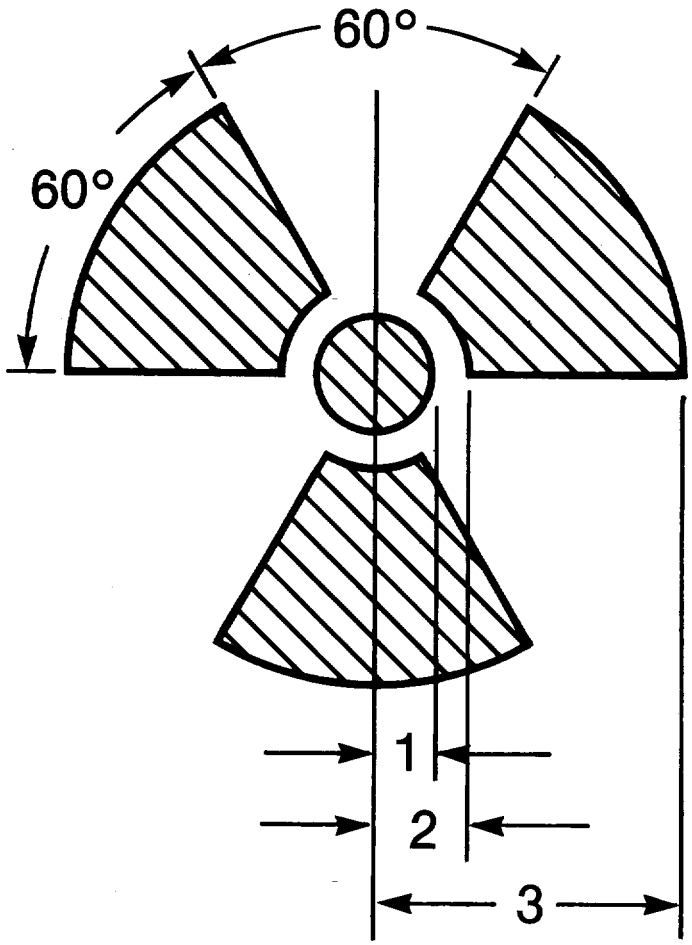

1=Radius of Circle—
Minimum dimensions
4 mm (0.16 inch) for markings and labels
12.5 mm (0.5 inch) for placards
2=1½ Radii
3=5 radii for markings and labels
4½ radii for placards.

[60 FR 50306, Sept. 28, 1995, as amended by 172–143, 61 FR 20750, May 8, 1996]

APPENDIX C—DIMENSIONAL SPECIFICATIONS FOR RECOMMENDED PLACARD HOLDER

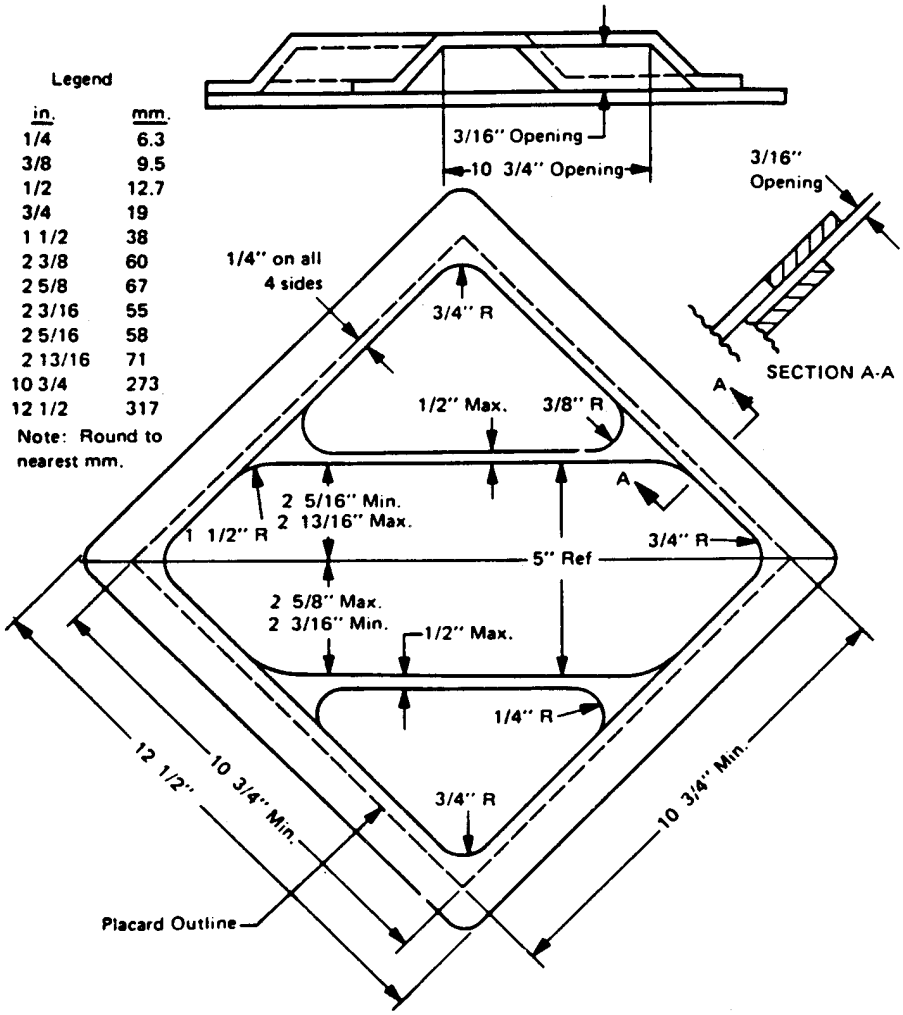

PART 173—SHIPPERS—GENERAL REQUIREMENTS FOR SHIPMENTS AND PACKAGINGS

Subpart A—General

Sec.
173.1 Purpose and scope.
173.2 Hazardous materials classes and index to hazard class definitions.
173.2a Classification of a material having more than one hazard.
173.3 Packaging and exceptions.
173.4 Small quantity exceptions.
173.5 Agricultural operations.
173.5a Oilfield service vehicles.
173.6 Materials of trade exceptions.
173.7 U.S. Government material.
173.8 Exceptions for non-specification packagings used in intrastate transportation.
173.9 Cars, truck bodies, freight containers, or trailers containing lading which has been fumigated or treated with Class 3, Division 2.1, 2.3, or 6.1 materials.
173.10 Tank car shipments.
173.12 Exceptions for shipment of waste materials.
173.13 Exceptions for Class 3, Divisions 4.1, 4.2, 4.3, 5.1, 6.1, and Classes 8 and 9 materials.

Subpart B—Preparation of Hazardous Materials for Transportation

173.21 Forbidden materials and packages.
173.22 Shipper's responsibility.
173.22a Use of packagings authorized under exemptions.
173.23 Previously authorized packaging.
173.24 General requirements for packagings and packages.
173.24a Additional general requirements for non-bulk packagings and packages.
173.24b Additional general requirements for bulk packagings.
173.25 Authorized packages and overpacks.
173.26 Quantity limitations.
173.27 General requirements for transportation by aircraft.
173.28 Reuse, reconditioning and remanufacture of packagings.
173.29 Empty packagings.
173.30 Loading and unloading of transport vehicles.
173.31 Use of tank cars.
173.32 Qualification, maintenance and use of portable tanks other than Specification IM portable tanks.
173.32a Approval of Specification IM portable tanks.
173.32b Periodic testing and inspection of Specification IM portable tanks.
173.32c Use of Specification IM portable tanks.
173.33 Hazardous materials in cargo tank motor vehicles.
173.34 Qualification, maintenance, and use of cylinders.
173.35 Hazardous materials in intermediate bulk containers.
173.40 General packaging requirements for poisonous materials required to be packaged in cylinders.

Subpart C—Definitions, Classification and Packaging for Class 1

173.50 Class 1—Definitions.
173.51 Authorization to offer and transport explosives.
173.52 Classification codes and compatibility groups of explosives.
173.53 Provisions for using old classifications of explosives.
173.54 Forbidden explosives.
173.55 [Reserved]
173.56 New explosives—definition and procedures for classification and approval.
173.57 Acceptance criteria for new explosives.
173.58 Assignment of class and division for new explosives.
173.59 Description of terms for explosives.
173.60 General packaging requirements for explosives.
173.61 Mixed packaging requirements.
173.62 Specific packaging requirements for explosives.
173.63 Packaging exceptions.

Subpart D—Definitions, Classification, Packing Group Assignments and Exceptions for Hazardous Material Other Than Class 1 and Class 7

173.115 Class 2, Divisions 2.1, 2.2, and 2.3—Definitions.
173.116 Class 2—Assignment of hazard zone.
173.117—173.119 [Reserved]
173.120 Class 3—Definitions.
173.121 Class 3—Assignment of packing group.
173.124 Class 4, Divisions 4.1, 4.2 and 4.3—Definitions.
173.125 Class 4—Assignment of packing group.
173.127 Class 5, Division 5.1—Definition and assignment of packing groups.
173.128 Class 5, Division 5.2—Definitions and types.
173.129 Class 5, Division 5.2—Assignment of packing group.
173.132 Class 6, Division 6.1—Definitions.
173.133 Assignment of packing group and hazard zones for Division 6.1 materials.
173.134 Class 6, Division 6.2—Definitions, exceptions and packing group assignments.
173.136 Class 8—Definitions.
173.137 Class 8—Assignment of packing group.
173.140 Class 9—Definitions.

173.141 Class 9—Assignment of packing group.
173.144 Other Regulated Materials (ORM)—Definitions.
173.145 Other Regulated Materials—Assignment of packing group.
173.150 Exceptions for Class 3 (flammable) and combustible liquids.
173.151 Exceptions for Class 4.
173.152 Exceptions for Division 5.1 (oxidizers) and Division 5.2 (organic peroxides).
173.153 Exceptions for Division 6.1 (poisonous materials).
173.154 Exceptions for Class 8 (corrosive materials).
173.155 Exceptions for Class 9 (miscellaneous hazardous materials).
173.156 Exceptions for ORM materials.

Subpart E—Non-bulk Packaging for Hazardous Materials Other Than Class 1 and Class 7

173.158 Nitric acid.
173.159 Batteries, wet.
173.160 Bombs, smoke, non-explosive (corrosive).
173.161 Chemical kits.
173.162 Gallium.
173.163 Hydrogen fluoride.
173.164 Mercury (metallic and articles containing mercury).
173.166 Air bag inflators, air bag modules and seat-belt pretensioners.
173.170 Black powder for small arms.
173.171 Smokeless powder for small arms.
173.172 Aircraft hydraulic power unit fuel tank.
173.173 Paint, paint-related material, adhesives and ink and resins.
173.174 Refrigerating machines.
173.181 Pyrophoric materials (liquids).
173.182 Barium azide—50 percent or more water wet.
173.183 Nitrocellulose base film.
173.184 Highway or rail fusee.
173.185 Lithium batteries and cells.
173.186 Matches.
173.187 Pyrophoric solids, metals or alloys, n.o.s.
173.188 White or yellow phosphorous.
173.189 Batteries containing sodium or cells containing sodium.
173.192 Packaging for certain Packing Group I poisonous materials.
173.193 Bromoacetone, methyl bromide, chloropicrin and methyl bromide or methyl chloride mixtures, etc.
173.194 Gas identification sets.
173.195 Hydrogen cyanide, anhydrous, stabilized (hydrocyanic acid, aqueous solution).
173.196 Infectious substances (etiologic agents).
173.197 Regulated medical waste.
173.198 Nickel carbonyl.
173.201 Non-bulk packagings for liquid hazardous materials in Packing Group I.
173.202 Non-bulk packagings for liquid hazardous materials in Packing Group II.
173.203 Non-bulk packagings for liquid hazardous materials in Packing Group III.
173.204 Non-bulk, non-specification packagings for certain hazardous materials.
173.205 Specification cylinders for liquid hazardous materials.
173.211 Non-bulk packagings for solid hazardous materials in Packing Group I.
173.212 Non-bulk packagings for solid hazardous materials in Packing Group II.
173.213 Non-bulk packagings for solid hazardous materials in Packing Group III.
173.214 Packagings which require approval by the Associate Administrator for Hazardous Materials Safety.
173.216 Asbestos, blue, brown, or white.
173.217 Carbon dioxide, solid (dry ice).
173.218 Fish meal or fish scrap.
173.219 Life-saving appliances.
173.220 Internal combustion engines, self-propelled vehicles, and mechanical equipment containing internal combustion engines or wet batteries.
173.221 Polymeric beads, expandable.
173.222 Wheelchairs equipped with wet electric storage batteries.
173.224 Packaging and control and emergency temperatures for self-reactive materials.
173.225 Packaging requirements and other provisions for organic peroxides.
173.226 Materials poisonous by inhalation, Division 6.1, Packing Group I, Hazard Zone A.
173.227 Materials poisonous by inhalation, Division 6.1, Packing Group I, Hazard Zone B.
173.228 Bromine pentaflouride or bromine trifluoride.
173.229 Chloric acid solution or chlorine dioxide hydrate, frozen.

Subpart F—Bulk Packaging for Hazardous Materials Other Than Class 1 and Class 7

173.240 Bulk packaging for certain low hazard solid materials.
173.241 Bulk packaging for certain low hazard liquid and solid materials.
173.242 Bulk packagings for certain medium hazard liquids and solids, including solids with dual hazards.
173.243 Bulk packaging for certain high hazard liquids and dual hazard materials which pose a moderate hazard.
173.244 Bulk packaging for certain pyrophoric liquids (Division 4.2), dangerous when wet (Division 4.3) materials, and poisonous liquids with inhalation hazards (Division 6.1).

173.245 Bulk packaging for extremely hazardous materials such as poisonous gases (Division 2.3).
173.247 Bulk packaging for certain elevated temperature materials (Class 9) and certain flammable elevated temperature materials (Class 3).
173.249 Bromine.

Subpart G—Gases; Preparation and Packaging

173.300 [Reserved]
173.300a Approval of independent inspection agency.
173.300b Approval of non-domestic chemical analyses and tests.
173.300c Termination of approval.
173.301 General requirements for shipment of compressed gases in cylinders and spherical pressure vessels.
173.302 Charging of cylinders with non-liquefied compressed gases.
173.303 Charging of cylinders with compressed gas in solution (acetylene).
173.304 Charging of cylinders with liquefied compressed gas.
173.305 Charging of cylinders with a mixture of compressed gas and other material.
173.306 Limited quantities of compressed gases.
173.307 Exceptions for compressed gases.
173.308 Cigarette lighter or other similar device charged with fuel.
173.309 Fire extinguishers.
173.314 Compressed gases in tank cars and multi-unit tank cars (effective July 1, 1996).
173.314 Requirements for compressed gases in tank car tanks (effective until July 1, 1996).
173.315 Compressed gases in cargo tanks and portable tanks.
173.316 Cryogenic liquids in cylinders.
173.318 Cryogenic liquids in cargo tanks.
173.319 Cryogenic liquids in tank cars.
173.320 Cryogenic liquids; exceptions.
173.321 Ethylamine.
173.322 Ethyl chloride.
173.323 Ethylene oxide.
173.334 Organic phosphates mixed with compressed gas.
173.335 Gas generator assemblies.
173.336 Nitrogen dioxide, liquefied, or dinitrogen tetroxide, liquefied.
173.337 Nitric oxide.
173.338 Tungsten hexafluoride.
173.340 Tear gas devices.

Subpart H—[Reserved]

Subpart I–Class 7 (Radioactive) Materials

173.401 Scope.
173.403 Definitions.
173.410 General design requirements.
173.411 Industrial packagings.
173.412 Additional design requirements for Type A packages.
173.413 Requirements for Type B packages.
173.415 Authorized Type A packages.
173.416 Authorized Type B packages.
173.417 Authorized fissile materials packages.
173.418 Authorized packages—pyrophoric Class 7 (radioactive) materials.
173.419 Authorized packages—oxidizing Class 7 (radioactive) materials.
173.420 Uranium hexafluoride (fissile, fissile excepted and non-fissile).
173.421 Excepted packages for limited quantities of Class 7 (radioactive) materials.
173.422 Additional requirements for excepted packages containing Class 7 (radioactive) materials.
173.423 Requirements for multiple hazard limited quantity Class 7 (radioactive) materials.
173.424 Excepted packages for radioactive instruments and articles.
173.425 Table of activity limits—excepted quantities and articles.
173.426 Excepted packages for articles containing natural uranium or thorium.
173.427 Transport requirements for low specific activity (LSA) Class 7 (radioactive) materials and surface contaminated objects (SCO).
173.428 Empty Class 7 (radioactive) materials packaging.
173.431 Activity limits for Type A and Type B packages.
173.433 Requirements for determining A_1 and A_2 values for radionuclides and for the listing of radionuclides on shipping papers and labels.
173.434 Activity-mass relationships for uranium and natural thorium.
173.435 Table of A_1 and A_2 values for radionuclides.
173.441 Radiation level limitations.
173.442 Thermal limitations.
173.443 Contamination control.
173.447 Storage incident to transportation—general requirements.
173.448 General transportation requirements.
173.453 Fissile materials—exceptions.
173.457 Transportation of fissile material, controlled shipments—specific requirements.
173.459 Mixing of fissile material packages.
173.461 Demonstration of compliance with tests.
173.462 Preparation of specimens for testing.
173.465 Type A packaging tests.
173.466 Additional tests for Type A packagings designed for liquids and gases.
173.467 Tests for demonstrating the ability of Type B and fissile materials

packagings to withstand accident conditions in transportation.
173.468 Test for LSA-III material.
173.469 Tests for special form Class 7 (radioactive) materials.
173.471 Requirements for U.S. Nuclear Regulatory Commission approved packages.
173.472 Requirements for exporting DOT Specification Type B and fissile packages.
173.473 Requirements for foreign-made packages.
173.474 Quality control for construction of packaging.
173.475 Quality control requirements prior to each shipment of Class 7 (radioactive) materials.
173.476 Approval of special form Class 7 (radioactive) materials.

Subparts J–O—[Reserved]

APPENDIX A TO PART 173—[RESERVED]
APPENDIX B TO PART 173—PROCEDURE FOR TESTING CHEMICAL COMPATIBILITY AND RATE OF PERMEATION IN PLASTIC PACKAGING AND RECEPTACLES
APPENDIX C TO PART 173—PROCEDURE FOR BASE-LEVEL VIBRATION TESTING
APPENDIX D TO PART 173—TEST METHODS FOR DYNAMITE (EXPLOSIVE, BLASTING, TYPE A)
APPENDIX E — G TO PART 173 [Reserved]
APPENDIX H TO PART 173—METHOD OF TESTING FOR SUSTAINED COMBUSTIBILITY

AUTHORITY: 49 U.S.C. 5101–5127, 44701; 49 CFR 1.45, 1.53.

Subpart A—General

§ 173.1 Purpose and scope.

(a) This part includes:

(1) Definitions of hazardous materials for transportation purposes;

(2) Requirements to be observed in preparing hazardous materials for shipment by air, highway, rail, or water, or any combination thereof; and

(3) Inspection, testing, and retesting responsibilities for persons who retest, recondition, maintain, repair and rebuild containers used or intended for use in the transportation of hazardous materials.

(b) A shipment of hazardous materials that is not prepared in accordance with this subchapter may not be offered for transportation by air, highway, rail, or water. It is the responsibility of each hazmat employer subject to the requirements of this subchapter to ensure that each hazmat employee is trained in accordance with the requirements prescribed in this subchapter. It is the duty of each person who offers hazardous materials for transportation to instruct each of his officers, agents, and employees having any responsibility for preparing hazardous materials for shipment as to applicable regulations in this subchapter.

(c) When a person other than the person preparing a hazardous material for shipment performs a function required by this part, that person shall perform the function in accordance with this part.

(d) In general, the Hazardous Materials Regulations (HMR) contained in this subchapter are based on the Recommendations of the United Nations Committee of Experts on the Transport of Dangerous Goods and are consistent with international regulations issued by the International Civil Aviation Organization (ICAO Technical Instructions) and the International Maritime Organization (IMDG Code). However, the HMR are not consistent in all respects with the UN Recommendations, the ICAO Technical Instructions or the IMDG Code, and compliance with the HMR will not guarantee acceptance by regulatory bodies outside of the United States.

[Amdt. 173–94, 41 FR 16062, Apr. 15, 1976, as amended by Amdt. 173–100, 41 FR 40476, Sept. 20, 1976; Amdt. 173–161, 48 FR 2655, Jan. 20, 1983; Amdt. 173–224, 55 FR 52606, Dec. 21, 1990; Amdt. 173–231, 57 FR 20953, May 15, 1992]

§ 173.2 Hazardous materials classes and index to hazard class definitions.

The hazard class of a hazardous material is indicated either by its class (or division) number, its class name, or by the letters ''ORM–D''. The following table lists class numbers, division numbers, class or division names and those sections of this subchapter which contain definitions for classifying hazardous materials, including forbidden materials.

Class No.	Division No. (if any)	Name of class or division	49 CFR reference for definitions
None	.....	Forbidden materials	173.21
None	.....	Forbidden explosives	173.54
1	1.1	Explosives (with a mass explosion hazard)	173.50
1	1.2	Explosives (with a projection hazard)	173.50
1	1.3	Explosives (with predominately a fire hazard)	173.50
1	1.4	Explosives (with no significant blast hazard)	173.50
1	1.5	Very insensitive explosives; blasting agents	173.50
1	1.6	Extremely insensitive detonating substances	173.50
2	2.1	Flammable gas	173.115
2	2.2	Non-flammable compressed gas	173.115
2	2.3	Poisonous gas	173.115
3	.....	Flammable and combustible liquid	173.120
4	4.1	Flammable solid	173.124
4	4.2	Spontaneously combustible material	173.124
4	4.3	Dangerous when wet material	173.124
5	5.1	Oxidizer	173.127
5	5.2	Organic peroxide	173.128
6	6.1	Poisonous materials	173.132
6	6.2	Infectious substance (Etiologic agent)	173.134
7	.....	Radioactive material	173.403
8	.....	Corrosive material	173.136
9	.....	Miscellaneous hazardous material	173.140
None	.....	Other regulated material: ORM–D	173.144

[Amdt. 173–224, 55 FR 52606, Dec. 21, 1990, as amended at 57 FR 45460, Oct. 1, 1992; Amdt. 173–234, 58 FR 51531, Oct. 1, 1993]

§173.2a Classification of a material having more than one hazard.

(a) *Classification of a material having more than one hazard.* Except as provided in paragraph (c) of this section, a material not specifically listed in the §172.101 Table that meets the definition of more than one hazard class or division as defined in this part, shall be classed according to the highest applicable hazard class of the following hazard classes, which are listed in descending order of hazard:

(1) Class 7 (radioactive materials, other than limited quantities).

(2) Division 2.3 (poisonous gases).

(3) Division 2.1 (flammable gases).

(4) Division 2.2 (nonflammable gases).

(5) Division 6.1 (poisonous liquids), Packing Group I, poisonous-by-inhalation only.

(6) A material that meets the definition of a pyrophoric material in §173.124(b)(1) of this subchapter (Division 4.2).

(7) A material that meets the definition of a self-reactive material in §173.124(a)(2) of this subchapter (Division 4.1).

(8) Class 3 (flammable liquids), Class 8 (corrosive materials), Division 4.1 (flammable solids), Division 4.2 (spontaneously combustible materials), Division 4.3 (dangerous when wet materials), Division 5.1 (oxidizers) or Division 6.1 (poisonous liquids or solids other than Packing Group I, poisonous-by-inhalation). The hazard class and packing group for a material meeting more than one of these hazards shall be determined using the precedence table in paragraph (b) of this section.

(9) Combustible liquids.

(10) Class 9 (miscellaneous hazardous materials).

(b) *Precedence of hazard table for Classes 3 and 8 and Divisions 4.1, 4.2, 4.3, 5.1 and 6.1.* The following table ranks those materials that meet the definition of Classes 3 and 8 and Divisions 4.1, 4.2, 4.3, 5.1 and 6.1:

PRECEDENCE OF HAZARD TABLE

[Hazard class and packing group]

	4.2	4.3	5.1 I [1]	5.1 II [1]	5.1 III [1]	6.1, I dermal	6.1, I oral	6.1 II	6.1 III	8, I liquid	8, I solid	8, II liquid	8, II solid	8, III liquid	8, III solid
3 I	.....	.....	.....	.....	.....	3	3	3	3	3	(3)	3	(3)	3	(3)
3 II	.....	.....	.....	.....	.....	3	3	3	3	8	(3)	3	(3)	3	(3)
3 III	.....	.....	.....	.....	.....	6.1	6.1	6.1	3[4]	8	(3)	8	(3)	3	(3)
4.1 II [2]	4.2	4.3	5.1	4.1	4.1	6.1	6.1	4.1	4.1	(3)	8	(3)	4.1	(3)	4.1
4.1 III [2]	4.2	4.3	5.1	4.1	4.1	6.1	6.1	6.1	4.1	(3)	8	(3)	8	(3)	4.1
4.2 II	.....	4.3	5.1	4.2	4.2	6.1	6.1	4.2	4.2	8	8	4.2	4.2	4.2	4.2
4.2 III	.....	4.3	5.1	5.1	4.2	6.1	6.1	6.1	4.2	8	8	8	8	4.2	4.2
4.3 I	.....	.....	5.1	4.3	4.3	6.1	4.3	4.3	4.3	4.3	4.3	4.3	4.3	4.3	4.3
4.3 II	.....	.....	5.1	4.3	4.3	6.1	4.3	4.3	4.3	8	8	8	4.3	4.3	4.3
4.3 III	.....	.....	5.1	5.1	4.3	6.1	6.1	6.1	4.3	8	8	8	8	4.3	4.3
5.1 I [1]	.....	.....	.....	.....	.....	5.1	5.1	5.1	5.1	5.1	5.1	5.1	5.1	5.1	5.1
5.1 II [1]	.....	.....	.....	.....	.....	6.1	5.1	5.1	5.1	8	8	8	5.1	5.1	5.1
5.1 III [1]	.....	.....	.....	.....	.....	6.1	6.1	6.1	5.1	8	8	8	8	5.1	5.1
6.1 I, Dermal	.....	.....	.....	.....	.....	.....	.....	.....	.....	8	6.1	6.1	6.1	6.1	6.1
6.1 I, Oral	.....	.....	.....	.....	.....	.....	.....	.....	.....	8	6.1	6.1	6.1	6.1	6.1
6.1 II, Inhalation	.....	.....	.....	.....	.....	.....	.....	.....	.....	8	6.1	6.1	6.1	6.1	6.1
6.1 II, Dermal	.....	.....	.....	.....	.....	.....	.....	.....	.....	8	6.1	8	6.1	6.1	6.1
6.1 II, Oral	.....	.....	.....	.....	.....	.....	.....	.....	.....	8	8	8	6.1	6.1	6.1
6.1 III	.....	.....	.....	.....	.....	.....	.....	.....	.....	8	8	8	8	8	8

[1] There are at present no established criteria for determining Packing Groups for liquids in Division 5.1. For the time being, the degree of hazard is to be assessed by analogy with listed substances, allocating the substances to Packing Group I, great; II, medium; or III, minor danger.

[2] Substances of Division 4.1 other than self-reactive substances.

[3] Denotes an impossible combination.

[4] For pesticides only, where a material has the hazards of Class 3, Packing Group III, and Division 6.1, Packing Group III, the primary hazard is Division 6.1, Packing Group III.

NOTE 1: The most stringent packing group assigned to a hazard of the material takes precedence over other packing groups; for example, a material meeting Class 3 PG II and Division 6.1 PG I (oral toxicity) is classified as Class 3 PG I.

NOTE 2: A material which meets the definition of Class 8 and has an inhalation toxicity by dusts and mists which meets criteria for Packing Group I specified in §173.133(a)(1) must be classed as Division 6.1 if the oral or dermal toxicity meets criteria for Packing Group I or II. If the oral or dermal toxicity meets criteria for Packing Group III or less, the material must be classed as Class 8.

(c) The following materials are not subject to the provisions of paragraph (a) of this section because of their unique properties:

(1) A Class 1 (explosive) material that meets any other hazard class or division as defined in this part shall be assigned a division in Class 1. Class 1 materials shall be classed and approved in accordance with §173.56 of this part;

(2) A Division 5.2 (organic peroxide) material that meets the definition of any other hazard class or division as defined in this part, shall be classed as Division 5.2;

(3) A Division 6.2 (infectious substance) material that also meets the definition of another hazard class or division, other than Class 7, or that also is a limited quantity Class 7 material, shall be classed as Division 6.2;

(4) A material that meets the definition of a wetted explosive in §173.124(a)(1) of this subchapter (Division 4.1). Wetted explosives are either specifically listed in the §172.101 Table or are approved by the Associate Administrator for Hazardous Materials Safety (see §173.124(a)(1) of this subchapter); and

(5) A limited quantity of a Class 7 (radioactive) material that meets the definition for more than one hazard class or division shall be classed in accordance with §173.423.

[Amdt. 173–224, 55 FR 52606, Dec. 21, 1990, as amended at 56 FR 66264, Dec. 20, 1991; Amdt. 173–241, 59 FR 67490, Dec. 29, 1994; Amdt. 173–247, 60 FR 48787, Sept. 20, 1995; Amdt. 173–244, 60 FR 50307, Sept. 28, 1995]

§173.3 Packaging and exceptions.

(a) The packaging of hazardous materials for transportation by air, highway, rail, or water must be as specified in this part. Methods of manufacture, packing, and storage of hazardous materials, that affect safety in transportation, must be open to inspection by a duly authorized representative of the initial carrier or of the Department. Methods of manufacture and related functions necessary for completion of a DOT specification or U.N. standard packaging must be open to inspection by a representative of the Department.

(b) The regulations setting forth packaging requirements for a specific material apply to all modes of transportation unless otherwise stated, or unless exceptions from packaging requirements are authorized.

(c) Salvage drums. Packages of hazardous materials that are damaged, defective, or found leaking and hazardous materials that have spilled or leaked may be placed in a metal or plastic removable head salvage drum that is compatible with the lading and shipped for repackaging or disposal under the following conditions:

(1) Except as provided in paragraph (c)(7) of this section, the drum must be a UN 1A2, 1B2, 1N2 or 1H2 tested and marked for Packing Group III or higher performance standards for liquids or solids and a leakproofness test of 20 kPa (3 psi). Alternatively, a drum manufactured and marked prior to October 1, 1993 as a salvage drum, in accordance with the provisions of this section in effect on September 30, 1991, is authorized. Capacity of the drum may not exceed 450 L (119 gallons).

(2) Each drum shall be provided when necessary with sufficient cushioning and absorption material to prevent excessive movement of the damaged package and to eliminate the presence of any free liquid at the time the salvage drum is closed. All cushioning and absorbent material used in the drum must be compatible with the hazardous material.

(3) Each salvage packaging must be marked with the proper shipping name of the hazardous material inside the packaging and the name and address of the consignee. In addition, the packaging must be marked ''SALVAGE'' or ''SALVAGE DRUM''.

(4) Each drum shall be labeled as prescribed for the respective material.

(5) The shipper shall prepare shipping papers in accordance with subpart C of part 172 of this subchapter.

(6) The overpack requirements of § 173.25 do not apply to drums used in accordance with this paragraph.

(7) A salvage packaging marked ''T'' in accordance with applicable provisions in the UN Recommendations may be used.

[Amdt. 173–224, 55 FR 52607, Dec. 21, 1990, as amended at 56 FR 66265, Dec. 20, 1991; Amdt. 173–234, 58 FR 51531, Oct. 1, 1993; Amdt. 173–261, 62 FR 24719, May 6, 1997]

§ 173.4 Small quantity exceptions.

(a) Small quantities of Class 3, Division 4.1, Division 4.2 (PG II and III), Division 4.3 (PG II and III), Division 5.1, Division 5.2, Division 6.1, Class 7, Class 8, and Class 9 materials that also meet the definition of one or more of these hazard classes, are not subject to any other requirements of this subchapter when—

(1) The maximum quantity of material per inner receptacle is limited to:

(i) Thirty (30) ml (1 ounce) for authorized liquids, other than Division 6.1, Packing Group I, materials;

(ii) Thirty (30) g (1 ounce) for authorized solids, other than Division 6.1, Packing Group I, materials;

(iii) One (1) g (0.04 ounce) for authorized materials classed as Division 6.1, Packing Group I; and

(iv) An activity level not exceeding that specified in §§ 173.421, 173.424, 173.425 or 173.426, as appropriate, for a package containing a Class 7 (radioactive) material.

(2) With the exception of temperature sensing devices, each inner receptacle:

(i) Is not liquid-full at 55 °C (131 °F), and

(ii) Is constructed of plastic having a minimum thickness of no less than 0.2 mm (0.008 inch), or earthenware, glass, or metal;

(3) Each inner receptacle with a removable closure has its closure held securely in place with wire, tape, or other positive means;

(4) Unless equivalent cushioning and absorbent material surrounds the inside packaging, each inner receptacle is securely packed in an inside packaging with cushioning and absorbent material that:

(i) Will not react chemically with the material, and

(ii) Is capable of absorbing the entire contents (if a liquid) of the receptacle;

(5) The inside packaging is securely packed in a strong outside packaging;

(6) The completed package, as demonstrated by prototype testing, is capable of sustaining—

(i) Each of the following free drops made from a height of 1.8 m (5.9 feet) directly onto a solid unyielding surface without breakage or leakage from any inner receptacle and without a substantial reduction in the effectiveness of the package:

(A) One drop flat on bottom;

(B) One drop flat on top;

(C) One drop flat on the long side;

(D) One drop flat on the short side; and

(E) One drop on a corner at the junction of three intersecting edges; and

(ii) A compressive load as specified in § 178.606(c) of this subchapter.

(7) Placement of the material in the package or packing different materials in the package does not result in a violation of § 173.21;

(8) The gross mass of the completed package does not exceed 29 kg (64 pounds);

(9) The package is not opened or otherwise altered until it is no longer in commerce; and

(10) The shipper certifies conformance with this section by marking the outside of the package with the statement ''This package conforms to 49 CFR 173.4'' or, alternatively, until October 1, 2001, with the statement ''This package conforms to the conditions and limitations specified in 49 CFR 173.4.''

(b) A package containing a Class 7 (radioactive) material also must conform to the requirements of § 173.421(a)(1) through (a)(5) or § 173.424(a) through (g), as appropriate.

(c) Packages which contain a Class 2, Division 4.2 (PG I), or Division 4.3 (PG I) material conforming to paragraphs (a)(1) through (a)(10) of this section may be offered for transportation or transported if specifically approved by

the Associate Administrator for Hazardous Materials Safety.

[Amdt. 173–224, 55 FR 52608, Dec. 21, 1990, as amended at 56 FR 66265, Dec. 20, 1991; Amdt. 173–234, 58 FR 51531, Oct. 1, 1993; Amdt. 173–244, 60 FR 50307, Sept. 28, 1995; Amdt. 173–253, 61 FR 27173, May 30, 1996]

§173.5 Agricultural operations.

(a) The transportation of an agricultural product other than a Class 2 material, over local roads between fields of the same farm, is excepted from the requirements of this subchapter when:

(1) It is transported by a farmer who is an intrastate private motor carrier; and

(2) The movement of the agricultural product conforms to requirements of the State in which it is transported and is specifically authorized by a State statute or regulation in effect before October 1, 1998.

(b) The transportation of an agricultural product to or from a farm, within 150 miles of the farm, is excepted from the requirements in subparts G and H of part 172 of this subchapter when:

(1) It is transported by a farmer who is an intrastate private motor carrier;

(2) The total amount of agricultural product being transported on a single vehicle does not exceed:

(i) 7,300 kg (16,094 lbs.) of ammonium nitrate fertilizer properly classed as Division 5.1, PG III, in a bulk packaging, or

(ii) 1900 L (502 gallons) for liquids or gases, or 2,300 kg (5,070 lbs.) for solids, of any other agricultural product;

(3) The packaging conforms to requirements of the State in which it is transported and is specifically authorized for transportation of the agricultural product by a State statute or regulation in effect on or before July 1, 1998; and

(4) Each person having any responsibility for transporting the agricultural product or preparing the agricultural product for shipment has been instructed in the applicable requirements of this subchapter.

(c) Formulated liquid agricultural products in specification packagings of 220 L (58 gallons) capacity, or less, with closures manifolded to a closed mixing system and equipped with positive dry disconnect devices may be transported by a private motor carrier between a final distribution point and an ultimate point of application or for loading aboard an airplane for aerial application.

(d) See §173.315(m) pertaining to nurse tanks of anhydrous ammonia.

(e) See §173.6 pertaining to materials of trade.

[Amdt. 173–259, 62 FR 1215, Jan. 8, 1997, as amended by Amdt. 173–262, 62 FR 49566, Sept. 22, 1997]

§173.5a Oilfield service vehicles.

Notwithstanding §173.29 of this subchapter, a cargo tank mounted on a transport vehicle used in oilfield servicing operations is not subject to the specification requirements of this subchapter if—

(a) The cargo tank and equipment contains only residual amounts (i.e., it is emptied so far as practicable) of a flammable liquid alone or in combination with water,

(b) No flame producing device is operated during transportation, and

(c) The proper shipping name is preceded by ''Residual'' on the shipping paper for each movement on a public highway.

[Amdt. 173–196, 51 FR 5971, Feb. 18, 1986]

§173.6 Materials of trade exceptions.

When transported by motor vehicle in conformance with this section, a material of trade (see §171.8 of this subchapter) is not subject to any other requirements of this subchapter besides those set forth or referenced in this section.

(a) *Materials and amounts.* A material of trade is limited to the following:

(1) A Class 3, 8, 9, Division 4.1, 5.1, 5.2, 6.1, or ORM-D material contained in a packaging having a gross mass or capacity not over—

(i) 0.5 kg (1 pound) or 0.5 L (1 pint) for a Packing Group I material;

(ii) 30 kg (66 pounds) or 30 L (8 gallons) for a Packing Group II, Packing Group III, or ORM–D material;

(iii) 1500 L (400 gallons) for a diluted mixture, not to exceed 2 percent concentration, of a Class 9 material.

(2) A Division 2.1 or 2.2 material in a cylinder with a gross weight not over 100 kg (220 pounds), or a permanently

mounted tank manufactured to ASME standards of not more than 70 gallon water capacity for a non-liquefied Division 2.2 material with no subsidiary hazard.

(3) A Division 4.3 material in Packing Group II or III contained in a packaging having a gross capacity not exceeding 30 ml (1 ounce).

(4) This section does not apply to a hazardous material that is self-reactive (see § 173.124), poisonous by inhalation (see § 173.133), or a hazardous waste.

(b) *Packaging.* (1) Packagings must be leak tight for liquids and gases, sift proof for solids, and be securely closed, secured against movement, and protected against damage.

(2) Each material must be packaged in the manufacturer's original packaging, or a packaging of equal or greater strength and integrity.

(3) Outer packagings are not required for receptacles (e.g., cans and bottles) that are secured against movement in cages, carts, bins, boxes or compartments.

(4) For gasoline, a packaging must be made of metal or plastic and conform to the requirements of this subchapter or to the requirements of the Occupational Safety and Health Administration of the Department of Labor contained in 29 CFR 1910.106(d)(2) or 1926.152(a)(1).

(5) A cylinder or other pressure vessel containing a Division 2.1 or 2.2 material must conform to packaging, qualification, maintenance, and use requirements of this subchapter, except that outer packagings are not required. Manifolding of cylinders is authorized provided all valves are tightly closed.

(c) *Hazard communication.* (1) A nonbulk packaging other than a cylinder (including a receptacle transported without an outer packaging) must be marked with a common name or proper shipping name to identify the material it contains, including the letters ''RQ'' if it contains a reportable quantity of a hazardous substance.

(2) A bulk packaging containing a diluted mixture of a Class 9 material must be marked on two opposing sides with the four-digit identification number of the material. The identification number must be displayed on orange panels or, alternatively, a white square-on-point configuration having the same outside dimensions as a placard (at least 273 mm (10.8 inches) on a side), in the manner specified in § 172.332 (b) and(c) of this subchapter. Each digit in the identification number marking must be at least 25 mm (one inch) high and 6 mm (0.24 inch) wide.

(3) A DOT specification cylinder (except DOT specification 39) must be marked and labeled as prescribed in this subchapter. Each DOT–39 cylinder must display the markings specified in 178.65(i).

(4) The operator of a motor vehicle that contains a material of trade must be informed of the presence of the hazardous material (including whether the package contains a reportable quantity) and must be informed of the requirements of this section.

(d) *Aggregate gross weight.* Except for a material of trade authorized by paragraph (a)(1)(iii) of this section, the aggregate gross weight of all materials of trade on a motor vehicle may not exceed 200 kg (440 pounds).

(e) *Other exceptions.* A material of trade may be transported on a motor vehicle under the provisions of this section with other hazardous materials without affecting its eligibility for exceptions provided by this section.

[Amdt. 173–259, 62 FR 1216, Jan. 8, 1997, as amended by Amdt. 173–262, 62 FR 49566, Sept. 22, 1997; 62 FR 51560, Oct. 1, 1997]

§ 173.7 U.S. Government material.

(a) Hazardous materials offered for transportation by, for, or to the Department of Defense (DOD) of the U.S. Government, including commercial shipments pursuant to a DOD contract, must be packaged in accordance with the regulations in this subchapter or in packagings of equal or greater strength and efficiency as certified by DOD in accordance with the procedures prescribed by ''Performance Oriented Packaging of Hazardous Material, DLAR 4145.41/AR 700–143/AFR 71–5/NAVSUPINST 4030.55/MCO 4030.40.'' Hazardous materials offered for transportation by DOD under this provision may be reshipped by any shipper to any consignee provided the original packaging has not been damaged or altered in any manner.

(1) Hazardous materials sold by the DOD in packagings that are not marked in accordance with the requirements of this subchapter may be shipped from DOD installations if the DOD certifies in writing that the packagings are equal to or greater in strength and efficiency than the packaging prescribed in this subchapter. The shipper shall obtain such a certification in duplicate for each shipment. He shall give one copy to the originating carrier and retain the other for no less than 1 year.

(b) Shipments of hazardous materials, made by or under the direction or supervision of the U.S. Department of Energy (DOE) or the Department of Defense (DOD), for the purpose of national security, and which are escorted by personnel specifically designated by or under the authority of those agencies, are not subject to the requirements of this subchapter. For transportation by a motor vehicle or a rail car, the escorts must be in a separate transport vehicle from the transport vehicle carrying the hazardous materials that are excepted by this paragraph. A document certifying that the shipment is for the purpose of national security must be in the possession of the person in charge of providing security during transportation.

(c) Shipments of explosive samples, not exceeding one gram net weight, offered by and consigned to the Bureau of Alcohol, Tobacco and Firearms (ATF) of the Department of the Treasury are not otherwise subject to the regulations in parts 110–189 of this subchapter when placed in a specifically designed multi-unit assembly packed in a strong outside packaging. The packaging must be of a type accepted by ATF as capable of precluding a propagation of any explosion outside the packaging. The second component from the outside of the packaging must be marked or tagged to indicate the presence of an explosive.

(d) Notwithstanding the requirements of §§173.416 and 173.417 of this subchapter, packagings made by or under the direction of the U.S. Department of Energy may be used for the transportation of Class 7 materials when evaluated, approved, and certified by the Department of Energy against packaging standards equivalent to those specified in 10 CFR part 71. Packages shipped in accordance with this paragraph shall be marked and otherwise prepared for shipment in a manner equivalent to that required by this subchapter for packagings approved by the Nuclear Regulatory Commission.

[29 FR 18671, Dec. 29, 1964. Redesignated at 32 FR 5606, Apr. 5, 1967]

EDITORIAL NOTE: For FEDERAL REGISTER citations affecting §173.7, see the List of CFR Sections Affected appearing in the Finding Aids section of this volume.

§173.8 Exceptions for non-specification packagings used in intrastate transportation.

(a) *Non-specification bulk packagings.* Notwithstanding requirements for specification packagings in subpart F of this part and parts 178 and 180 of this subchapter, a non-specification bulk packaging may be used for transportation of a hazardous material by an intrastate motor carrier until July 1, 2000, in accordance with the provisions of paragraph (d) of this section.

(b) *Non-specification cargo tanks for petroleum products.* Notwithstanding requirements for specification packagings in subpart F of this part and parts 178 and 180 of this subchapter, a non-specification cargo tank motor vehicle having a capacity of less than 13,250 liters (3,500 gallons) may be used by an intrastate motor carrier for transportation of a flammable liquid petroleum product in accordance with the provisions of paragraph (d) of this section.

(c) *Permanently secured non-bulk tanks for petroleum products.* Notwithstanding requirements for specification packagings in subpart F of this part 173 and parts 178 and 180 of this subchapter, a non-specification metal tank permanently secured to a transport vehicle and protected against leakage or damage in the event of a turnover, having a capacity of less than 450 liters (119 gallons), may be used by an intrastate motor carrier for transportation of a flammable liquid petroleum product in accordance with the provisions of paragraph (d) of this section.

(d) *Additional requirements.* A packaging used under the provisions of paragraphs (a), (b) or (c) of this section must—

(1) Be operated by an intrastate motor carrier and in use as a packaging for hazardous material before July 1, 1998;

(2) Be operated in conformance with the requirements of the State in which it is authorized;

(3) Be specifically authorized by a State statute or regulation in effect before October 1, 1998, for use as a packaging for the hazardous material being transported;

(4) Be offered for transportation and transported in conformance with all other applicable requirements of this subchapter;

(5) Not be used to transport a flammable cryogenic liquid, hazardous substance, hazardous waste, or marine pollutant; and

(6) On and after July 1, 2000, for a tank authorized under paragraph (b) or (c) of this section, conform to all requirements in part 180 (except for § 180.405(g)) of this subchapter in the same manner as required for a DOT specification MC 306 cargo tank motor vehicle.

[Amdt. 173–259, 62 FR 1216, Jan. 8, 1997, as amended by Amdt. 172–262, 62 FR 49567, Sept. 22, 1997]

§ 173.9 Cars, truck bodies, freight containers, or trailers containing lading which has been fumigated or treated with Class 3, Division 2.1, 2.3, or 6.1 materials.

(a) Delivery for transportation by rail carrier of any rail car, freight container, truck body, or trailer containing lading which has been fumigated or treated with Class 3 or Division 2.1 materials is prohibited until 48 hours have elapsed after such fumigation or treatment, or until the rail car, freight container, truck body or trailer has been ventilated so as to remove any danger of fire or explosion due to the presence of flammable vapors.

(b) Any rail car, freight container, truck body or trailer containing lading which has been fumigated or treated with Division 6.1 or Division 2.3 materials, such as carbolic acid, liquid or solid, chlorpicrin, hydrocyanic acid, methyl bromide, etc., must be placarded on each door or near thereto with the FUMIGANT placard prescribed in paragraph (c) of this section or a placard as required by the Environmental Protection Agency (EPA).

(c) *FUMIGANT placard.* The FUMIGANT placard must consist of red letters on a white background which is at least 25 cm (9.8 inches) wide and 20 cm (7.9 inches) high. It must contain the name of the fumigant and other text as follows:

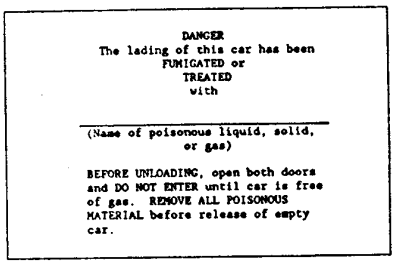

(d) See § 174.615 of this subchapter for requirements for cleaning fumigated cars

(e) See § 176.76(h) of this subchapter for requirements for fumigated transport units on vessels.

[Amdt. 173–224, 55 FR 52608, Dec. 21, 1990, as amended by Amdt. 172–241, 59 FR 67490, Dec. 29, 1994; 62 FR 51560, Oct. 1, 1997]

EFFECTIVE DATE NOTE: By Amdt. 173–260, 62 FR 1234, Jan. 8, 1997, § 173.9 was revised, effective Oct. 1, 1997. At 62 FR 39398, July 22, 1997, the effective date was delayed until Oct. 1, 1998. For the convenience of the user the revised text is set forth as follows:

§ 173.9 Transport vehicles or freight containers containing lading which has been fumigated.

(a) For the purpose of this section, not including 49 CFR part 387, a rail car, freight container, truck body, or trailer in which the lading has been fumigated with any material, or is undergoing fumigation, is a package containing a hazardous material, unless the transport vehicle or freight container has been sufficiently aerated so that it does not pose an unreasonable risk to health and safety.

(b) No person may offer for transportation or transport a rail car, freight container, truck body, or trailer in which the lading has been fumigated or treated with any material, or is undergoing fumigation, unless

the FUMIGANT marking specified in paragraph (c) of this section is prominently displayed so that it can be seen by any person attempting to enter the interior of the transport vehicle or freight container. For domestic transportation, a hazard warning label authorized by EPA under 40 CFR part 156 may be used as an alternative to the FUMIGANT marking.

(c) *FUMIGANT marking.* (1) The FUMIGANT marking must consist of red letters on a white background that is at least 30 cm (11.8 inches) wide and at least 25 cm (9.8 inches) high. Except for size and color, the FUMIGANT marking must be as follows:

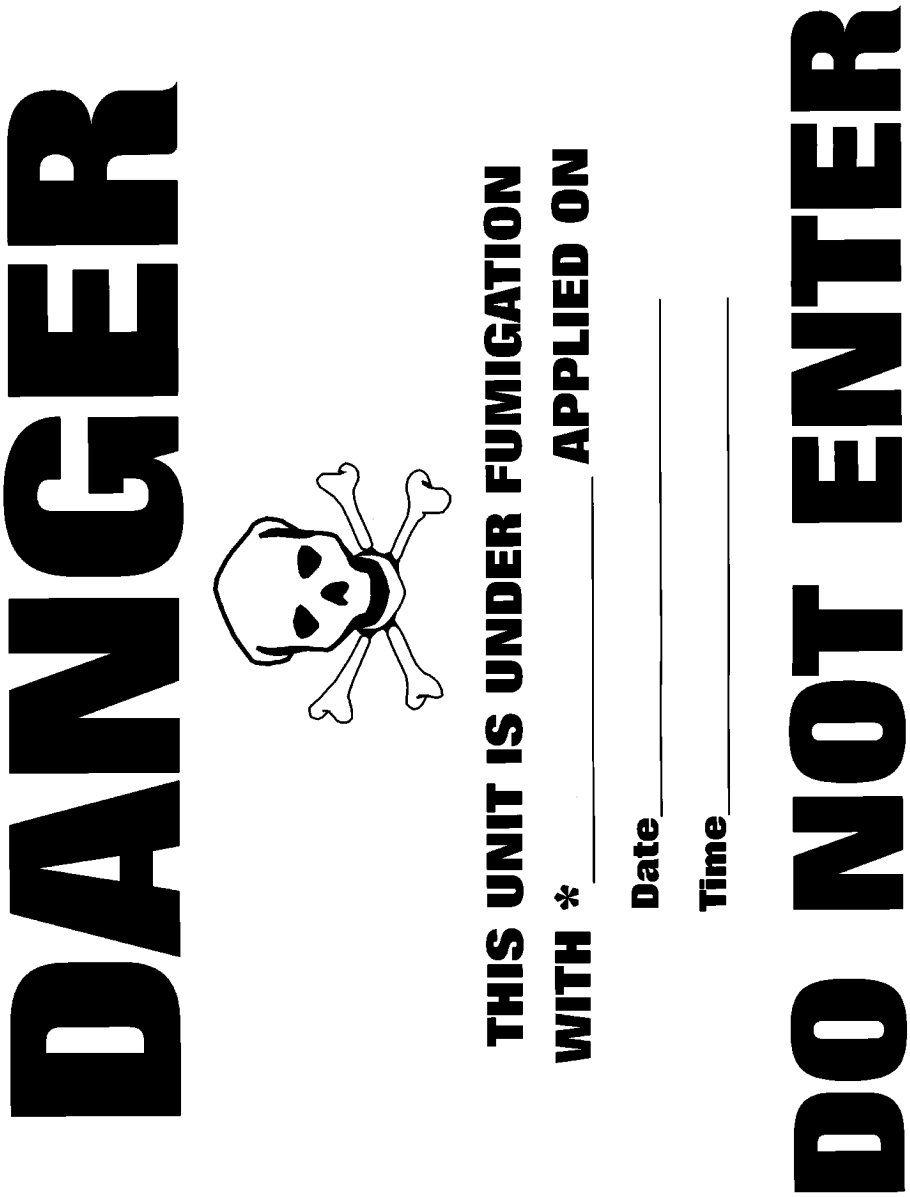

(2) The ''*'' shall be replaced with the technical name of the fumigant.

(d) No person may affix or display on a rail car, freight container, truck body, or trailer (a package) the FUMIGANT marking specified in paragraph (c) of this section, unless the lading has been fumigated or is undergoing fumigation.

(e) The FUMIGANT marking required by paragraph (b) of this section must remain on the rail car, freight container, truck body, or trailer until:

(1) The fumigated lading is unloaded; and

(2) The transport vehicle or freight container has undergone sufficient aeration to assure that it does not pose an unreasonable risk to health and safety.

(f) For international shipments, transport documents must indicate the date of fumigation, type and amount of fumigant used, and instructions for disposal of any residual fumigant, including fumigation devices.

(g) Any person subject to the requirements of this section, solely due to the fumigated lading, must be informed of the requirements of this section and the safety precautions necessary to protect themselves and others in the event of an incident or accident involving the fumigated lading.

(h) Any person who offers for transportation or transports a rail car, freight container, truck body or trailer that is subject to this subchapter solely because of the hazardous materials designation specified in paragraph (a) of this section is not subject to any other requirements of this subchapter.

[Amdt. 173–260, 62 FR 1234, Jan. 8, 1997]

§173.10 Tank car shipments.

(a) Tank cars containing any 2.1 material (including a cryogenic liquid) or Class 3 material with a flash point below 38° C (100° F), except liquid road asphalt or tar, may not be offered for transportation unless originally consigned or subsequently reconsigned to parties having private-siding (see Note 1 of this section) or to parties using railroad siding facilities which have been equipped for piping the liquid from tank cars to permanent storage tanks of sufficient capacity to receive contents of car.

(b) A tank car containing any Class 2 material must not be offered for transportation unless the car is consigned for delivery (see paragraph (c) of this section) and unloading on a private track (see Note 1 of this section) except that where no private track is available, delivery and unloading on carrier tracks is permitted provided the following conditions are complied with:

(1) Any tank car of DOT–106A or 110A type (see §§179.300 and 179.301 of this subchapter) may be offered for transportation and the loaded unit tanks may be removed from car frame on carrier tracks, provided the shipper has obtained from the delivering carrier and filed with originating carrier, written permission (see Note 2 of this section) for such removal. The consignee must furnish adequately safe mechanical hoist, obtained from the carrier if desirable, by which the tanks shall be lifted from the car and deposited directly upon vehicles furnished by the consignee for immediate removal from carrier property or tanks must be lifted by adequately safe mechanical hoist from car directly to vessels for further transportation

(c) Any tank car of other than DOT–106A or 110A type (see §§179.300 and 179.301 of this subchapter), containing anhydrous ammonia, liquefied hydrocarbon or liquefied petroleum gas, and having interior pipes of liquid and gas discharge valves equipped with check valves, may be consigned for delivery and unloading on carrier tracks, if the lading is piped directly from the car to permanent storage tanks of sufficient capacity to receive the entire contents of the car. Such cars may also be consigned for storage on a private track or on a carrier track when designated by the carrier for such storage.

(d) For cars of the DOT–106A or 110A type (see §§179.300 and 179.301 of this subchapter), the tanks must be placed in position and attached to the car structure by the shipper.

(e) Class 3 materials with a flash point below 38 °C (100 °F) and Division 2.1 materials (including a cryogenic liquid) may not be loaded into tank cars on carrier property from tank trucks or drums.

NOTE 1: For this purpose, a private track is a track outside of carrier's right-of-way, yard, and terminals, and of which the carrier does not own either the rails, ties, roadbed or right-of-way; or a track or portion of a track which is devoted to the purpose of its user, either by lease or written agreement; in which case the lease or written agreement will be considered as equivalent to ownership.

NOTE 2: Carriers should give permission for the unloading of these containers on carrier tracks only where no private siding is available within reasonable trucking distance of final destination. The danger involved is the release of compressed gases due to accidental

injury to container in handling. The exposure to this danger decreases directly with the isolation of the unloading point.

[29 FR 18773, Dec. 29, 1964. Redesignated at 32 FR 5606, Apr. 5, 1967, and by Amdt. 173–162, 48 FR 10226, Mar. 10, 1983, and amended by Amdt. 173–180, 49 FR 42735, Oct. 24, 1984; Amdt. 173–207, 53 FR 38274, Sept. 29, 1988; Amdt. 173–224, 55 FR 52608, Dec. 21, 1990; 56 FR 66265, Dec. 20, 1991; Amdt. 173–234, 58 FR 51532, Oct. 1, 1993]

§ 173.12 Exceptions for shipment of waste materials.

(a) *Open head drums.* If a hazardous material that is a hazardous waste is required by this subchapter to be shipped in a closed head drum (i.e., a drum with a 7.0 cm (3 inches) or less bung opening) and the hazardous waste contains solids or semisolids that make its placement in a closed head drum impracticable, an equivalent (except for closure) open head drum may be used for the hazardous waste.

(b) *Lab packs.* (1) Waste materials classed as Class or Division 3, 4.1, 4.2, 4.3, 5.1, 6.1, 8, or 9 are excepted from the specification packaging requirements of this subchapter for combination packagings if packaged in accordance with this paragraph and transported for disposal or recovery by highway only. In addition, a generic description from the § 172.101 Table may be used in place of specific chemical names, when two or more chemically compatible waste materials in the same hazard class are packaged in the same outside packaging.

(2) Additional packaging requirements are as follows:

(i) The outer packaging must be a UN 1A2 or UN 1B2 metal drum, a UN 1D plywood drum, a UN 1G fiber drum or a UN 1H2 plastic drum tested and marked at least for the Packing Group III performance level for liquids or solids;

(ii) The inner packagings must be either glass, not exceeding 4 L (1 gallon) rated capacity, or metal or plastic, not exceeding 20 L (5.3 gallons) rated capacity;

(iii) Each outer packaging may contain only one class of hazardous material;

(iv) Inner packagings containing liquid must be surrounded by a chemically compatible absorbent material in sufficient quantity to absorb the total liquid contents; and

(v) Gross weight of the complete package may not exceed 205 kg (452 lbs).

(3) *Prohibited materials.* Materials meeting the definition of Division 6.1, Packing Group I, or Division 4.2, Packing Group I, and bromine pentafluoride; bromine trifluoride; chloric acid; and oleum (*fuming sulfuric acid*) may not be packaged or described under the provisions of this paragraph.

(c) *Reuse of packagings.* A previously used packaging may be reused for the shipment of hazardous waste to designated facilities, not subject to the reconditioning and reuse provisions contained in § 173.28 and part 178 of this subchapter, under the following conditions:

(1) Except as authorized by this paragraph, the waste must be packaged in accordance with this part and offered for transportation in accordance with the requirements of this subchapter.

(2) Transportation is performed by highway only.

(3) A package is not offered for transportation less than 24 hours after it is finally closed for transportation, and each package is inspected for leakage and is found to be free from leaks immediately prior to being offered for transportation.

(4) Each package is loaded by the shipper and unloaded by the consignee, unless the motor carrier is a private or contract carrier.

(5) The packaging may be used only once under this paragraph and may not be used again for shipment of hazardous materials except in accordance with § 173.28.

(d) *Technical names for n.o.s. descriptions.* The requirements for the inclusion of technical names for n.o.s. descriptions on shipping papers and package markings, §§ 172.203 and 172.301 of this subchapter, respectively, do not apply to packagings prepared in accordance with paragraph (b) of this section, except as follows:

(1) Packages containing materials meeting the definition of a hazardous substance must be described as required in § 172.203(c) of this subchapter and marked as required in § 172.324 of this subchapter; and

(2) Packages containing hazardous materials subject to the provisions of §172.203(m) of this subchapter must be described in accordance with §172.203(m) of this subchapter.

[Amdt. 173–224, 55 FR 52609, Dec. 21, 1990, as amended at 56 FR 66265, Dec. 20, 1991; Amdt. 173–231, 57 FR 52939, Nov. 5, 1992; Amdt. 173–138, 59 FR 49133, Sept. 26, 1994]

§173.13 Exceptions for Class 3, Divisions 4.1, 4.2, 4.3, 5.1, 6.1, and Classes 8 and 9 materials.

(a) A Class 3, 8 or 9, or Division 4.1, 4.2, 4.3, 5.1, or 6.1 material is excepted from the labeling and placarding requirements of this subchapter if prepared for transportation in accordance with the requirements of this section. A material that meets the definition of a material poisonous by inhalation may not be offered for transportation or transported under provisions of this section.

(b) A hazardous material conforming to requirements of this section may be transported by motor vehicle, rail car, or cargo-only aircraft. Only hazardous materials permitted to be transported aboard a cargo-only aircraft by column (9B) of the Hazardous Materials Table in §172.101 of this subchapter are authorized for transport aboard cargo-only aircraft pursuant to the provisions of this section.

(c) A hazardous material permitted by paragraph (a) of this section must be packaged as follows:

(1) For liquids:

(i) The hazardous material must be placed in a tightly closed glass, plastic or metal inner packaging with a maximum capacity not exceeding 1.2 liters. Sufficient outage must be provided such that the inner packaging will not become liquid full at 55 °C (130 °F). The net quantity (measured at 20 °C (68 °F)) of liquid in any inner packaging may not exceed one liter.

(ii) The inner packaging must be placed in a hermetically-sealed barrier bag which is impervious to the lading, and then wrapped in a non-reactive absorbent material in sufficient quantity to completely absorb the contents of the inner packaging, and placed in a snugly fitting, metal can.

(iii) The metal can must be securely closed. For liquids that are in Division 4.2 or 4.3, the metal can must be hermetically sealed. For Division 4.2 materials in Packing Group I, the metal can must be tested in accordance with part 178 of this subchapter at the Packing Group I performance level.

(iv) The metal can must be placed in a fiberboard box that is placed in a hermetically-sealed barrier bag which is impervious to the lading.

(v) The intermediate packaging must be placed inside a securely closed, outer packaging conforming to §173.201.

(vi) Not more than four intermediate packagings are permitted in an outer packaging.

(2) For solids:

(i) The hazardous material must be placed in a tightly closed glass, plastic or metal inner packaging. The net quantity of material in any inner packaging may not exceed 2.85 kg (6.25 pounds).

(ii) The inner packaging must be placed in a hermetically-sealed barrier bag which is impervious to the lading.

(iii) The barrier bag and its contents must be placed in a fiberboard box that is placed in a hermetically-sealed barrier bag which is impervious to the lading.

(iv) The intermediate packaging must be placed inside an outer packaging conforming to §173.211.

(v) Not more than four intermediate packagings are permitted in an outer packaging.

(d) The outside of the package must be marked, in association with the proper shipping name, with the statement: ''This package conforms to 49 CFR 173.13.''

[Amdt. 173–253, 61 FR 27173, May 30, 1996]

Subpart B—Preparation of Hazardous Materials for Transportation

§173.21 Forbidden materials and packages.

Unless otherwise provided in this subchapter, the offering for transportation or transportation of the following is forbidden:

(a) Materials that are designated ''Forbidden'' in Column 3 of the §172.101 Table.

(b) Forbidden explosives as defined in § 173.54 of this part.

(c) Electrical devices which are likely to create sparks or generate a dangerous quantity of heat, unless packaged in a manner which precludes such an occurrence.

(d) For carriage by aircraft, any package which has a magnetic field of more than 0.00525 gauss measured at 4.5 m (15 feet) from any surface of the package.

(e) A material in the same packaging, freight container, or overpack with another material, the mixing of which is likely to cause a dangerous evolution of heat, or flammable or poisonous gases or vapors, or to produce corrosive materials.

(f) A package containing a material which is likely to decompose with a self-accelerated decomposition temperature (SADT) of 50° C (122° F) or less, or polymerize at a temperature of 54° C (130° F) or less with an evolution of a dangerous quantity of heat or gas when decomposing or polymerizing, unless the material is stabilized or inhibited in a manner to preclude such evolution. The SADT may be determined by any of the test methods described in Part II of the UN Manual of Tests and Criteria.

(1) A package meeting the criteria of paragraph (f) of this section may be required to be shipped under controlled temperature conditions. The control temperature and emergency temperature for a package shall be as specified in the table in this paragraph based upon the SADT of the material. The control temperature is the temperature above which a package of the material may not be offered for transportation or transported. The emergency temperature is the temperature at which, due to imminent danger, emergency measures must be initiated.

SECTION 173.21 TABLE: METHOD OF DETERMINING CONTROL AND EMERGENCY TEMPERATURE.

SADT [1]	Control temperatures	Emergency temperature
SADT ≤ 20 °C (68 °F).	20 °C (36 °F) below SADT.	10 °C (18 °F) below SADT.
20 °C (68 °F) < SADT ≤ 35 °C (95 °F).	15 °C (27 °F) below SADT.	10 °C (18 °F) below SADT.
35 °C (95 °F) < SADT ≤ 50 °C (122 °F).	10 °C (18 °F) below SADT.	5 °C (9 °F) below SADT.
50 °C (122 °F) < SADT.	([2])	([2])

[1] Self-accelerating decomposition temperature.
[2] Temperature control not required.

(2) For self-reactive materials listed in § 173.224(b) Table control and emergency temperatures, where required are shown in Columns 5 and 6, respectively. For organic peroxides listed in The Organic Peroxides Table in § 173.225 control and emergency temperatures, where required, are shown in Columns 7a and 7b, respectively.

(3) Refrigeration may be used as a means of stabilization only when approved by the Associate Administrator for Hazardous Materials Safety. For status of approvals previously issued by the Bureau of Explosives, see § 171.19 of this subchapter. Methods of stabilization approved by the Associate Administrator for Hazardous Materials Safety are as follows:

(i) For highway transportation:

(A) A material meeting the criteria of this paragraph (f) may be transported only in a transport vehicle, freight container, or motor vehicle equipped with a mechanical refrigeration unit, or loaded with a consumable refrigerant, capable of maintaining the inside temperature of the hazardous material at or below the control temperature required for the material during transportation.

(B) Each package containing a material meeting the criteria of this paragraph (f) must be loaded and maintained at or below the control temperature required for the material. The temperature of the material must be determined by appropriate means and entered on a written record at the time the packaging is loaded.

(C) The vehicle operator shall monitor the inside temperature of the transport vehicle, freight container, or

motor vehicle and enter that temperature on a written record at the time the package is loaded and thereafter at intervals not exceeding two hours. Alternatively, a transport vehicle, freight container, or motor vehicle may be equipped with a visible or audible warning device that activates when the inside temperature of the transport vehicle, freight container, or motor vehicle exceeds the control temperature required for the material. The warning device must be readily visible or audible, as appropriate, from the vehicle operator's seat in the vehicle.

(D) The carrier shall advise the vehicle operator of the emergency temperature for the material, and provide the vehicle operator with written procedures that must be followed to assure maintenance of the control temperature inside the transport vehicle, freight container, or motor vehicle. The written procedures must include instructions for the vehicle operator on actions to take if the inside temperature exceeds the control temperature and approaches or reaches the emergency temperature for the material. In addition, the written temperature-control procedures must identify enroute points where the consumable refrigerant may be procured, or where repairs to, or replacement of, the mechanical refrigeration unit may be accomplished.

(E) The vehicle operator shall maintain the written temperature-control procedures, and the written record of temperature measurements specified in paragraph (f)(3)(i)(C) of this section, if applicable, in the same manner as specified in §177.817 of this subchapter for shipping papers.

(F) If the control temperature is maintained by use of a consumable refrigerant (e.g., dry ice or liquid nitrogen), the quantity of consumable refrigerant must be sufficient to maintain the control temperature for twice the average transit time under normal conditions of transportation.

(G) A material that has a control temperature of 40 °C (104 °F) or higher may be transported by common carrier. A material that has a control temperature below 40 °C (104 °F) must be transported by a private or contract carrier.

(ii) For transportation by vessel, shipments are authorized in accordance with the control-temperature requirements of Section 21 of the General Introduction of the International Maritime Dangerous Goods Code (IMDG Code).

(g) Packages which give off a flammable gas or vapor, released from a material not otherwise subject to this subchapter, likely to create a flammable mixture with air in a transport vehicle.

(h) Packages containing materials (other than those classed as explosive) which will detonate in a fire.

(1) For purposes of this paragraph, ''detonate'' means an explosion in which the shock wave travels through the material at a speed greater than the speed of sound.

(2) When tests are required to evaluate the performance of a package under the provisions of this paragraph, the testing must be done or approved by one of the agencies specified in §173.56.

(i) A package containing a cigarette lighter, or other similar device, equipped with an ignition element and containing fuel; except that a cigarette lighter or similar device subject to this paragraph may be shipped if the design of the device and its inner packaging has been examined by the Bureau of Explosives and specifically approved by the Associate Administrator for Hazardous Materials Safety. The examination of cigarette lighters and similar devices containing gaseous fuel will include scrutiny for compliance with §173.308 of this part. For the status of approvals previously issued by the Bureau of Explosives, see §171.19 of this subchapter.

(j) An organic peroxide of the ''ketone peroxide'' category which contains more than 9 percent available oxygen as calculated using the equation in §173.128(a)(4)(ii). The category, ketone peroxide, includes, but is not limited to:

Acetyl acetone peroxide
Cyclohexanone peroxide(s)
Diacetone alcohol peroxides
Methylcyclohexanone peroxide(s)
Methyl ethyl ketone peroxide(s)
Methyl isobutyl ketone peroxide(s)

(k) Notwithstanding any other provision of this subchapter, including

§§ 171.11 and 175.10(a)(2) of this subchapter, an oxygen generator (chemical) as cargo on a passenger-carrying aircraft. This prohibition does not apply to an oxygen generator for medical or personal use of a passenger that meets the requirements of § 175.10(a)(7) or § 175.10(a)(24) of this subchapter.

[Amdt. 173–224, 55 FR 52609, Dec. 21, 1990, as amended at 56 FR 66265, Dec. 20, 1991; Amdt. 173–234, 58 FR 51532, Oct. 1, 1993; Amdt. 173–241, 59 FR 67490, Dec. 29, 1994; Amdt. 173–254, 61 FR 26419, May 24, 1996; Amdt. 173–253, 61 FR 27174, May 30, 1996; Amdt. 173–254, 61 FR 68954, Dec. 30, 1996; Amdt. 173–261, 62 FR 24719, May 6, 1997]

§ 173.22 Shipper's responsibility.

(a) Except as otherwise provided in this part, a person may offer a hazardous material for transportation in a packaging or container required by this part only in accordance with the following:

(1) The person shall class and describe the hazardous material in accordance with parts 172 and 173 of this subchapter, and

(2) The person shall determine that the packaging or container is an authorized packaging, including part 173 requirements, and that it has been manufactured, assembled, and marked in accordance with:

(i) Section 173.7(a) and parts 173, 178, or 179 of this subchapter;

(ii) A specification of the Department in effect at the date of manufacture of the packaging or container;

(iii) National or international regulations based on the UN Recommendations on the Transport of Dangerous Goods, as authorized in § 173.24(d)(2);

(iv) An approval issued under this subchapter; or

(v) An exemption issued under subchapter A of this chapter.

(3) In making the determination under paragraph (a)(2) of this section, the person may accept:

(i) Except for the marking on the bottom of a metal or plastic drum with a capacity over 100 liters which has been reconditioned, remanufactured or otherwise converted, the manufacturer's certification, specification, approval, or exemption marking (see §§ 178.2 and 179.1 of this subchapter); or

(ii) With respect to cargo tanks provided by a carrier, the manufacturer's identification plate or a written certification of specification or exemption provided by the carrier.

(4) For a DOT specification or UN standard packaging subject to the requirements of part 178 of this subchapter, a person shall perform all functions necessary to bring that package into compliance with part 178 of this subchapter, as identified by the packaging manufacturer or subsequent distributor, in accordance with § 178.2 of this subchapter.

(b) [Reserved]

(c) Prior to each shipment of fissile radioactive materials, and Type B or highway route controlled quantity packages of radioactive materials (see § 173.403), the shipper shall notify the consignee of the dates of shipment and expected arrival. The shipper shall also notify each consignee of any special loading/unloading instructions prior to his first shipment. For any shipment of irradiated reactor fuel, the shipper shall provide physical protection in compliance with a plan established under:

(1) Requirements prescribed by the U.S. Nuclear Regulatory Commission, or

(2) Equivalent requirements approved by the Associate Administrator for Hazardous Materials Safety, RSPA.

[Amdt. 173–100, 42 FR 2689, Jan. 13, 1977]

EDITORIAL NOTE: For FEDERAL REGISTER citations affecting § 173.22, see the List of CFR Sections Affected appearing in the Finding Aids section of this volume.

§ 173.22a Use of packagings authorized under exemptions.

(a) Except as provided in paragraph (b) of this section, no person may offer a hazardous material for transportation in a packaging the use of which is dependent upon an exemption issued under subpart B of part 107 of this title, unless that person is the holder of or a party to the exemption.

(b) If an exemption authorizes the use of a packaging for the shipment or transportation of a hazardous material by any person or class of persons other than or in addition to the holder of the exemption, that person or a member of that class of persons may use the packaging for the purposes authorized in the exemption subject to the terms

specified therein. However, no person may use a packaging under the authority of this paragraph unless he maintains a copy of the exemption at each facility where the packaging is being used in connection with the shipment or transportation of the hazardous material concerned. Copies of exemptions may be obtained from the Associate Administrator for Hazardous Materials Safety, U.S. Department of Transportation, Washington, DC 20590–0001, Attention: Docket Section.

(c) When an exemption issued to a person who offers a hazardous material contains requirements that apply to a carrier of the hazardous material, the offeror shall furnish a copy of the exemption to the carrier before or at the time a shipment is tendered.

[Amdt. 173–93, 41 FR 3478, Jan. 23, 1976, as amended by Amdt. 173–121, 43 FR 48643, Oct. 19, 1978; Amdt. 173–223, 55 FR 39981, Oct. 1, 1990; Amdt. 173–224, 56 FR 66279, Dec. 20, 1991; Amdt. 173–233, 58 FR 33305, June 16, 1993; Amdt. 173.249, 61 FR 21102, May 9, 1996; Amdt.173–249, 61 FR 51242, Oct. 1, 1996]

§173.23 Previously authorized packaging.

(a) When the regulations specify a packaging with a specification marking prefix of ''DOT,'' a packaging marked prior to January 1, 1970, with the prefix of ''ICC'' may be used in its place if the packaging otherwise conforms to applicable specification requirements.

(b) [Reserved]

(c) After July 2, 1982, a seamless aluminum cylinder manufactured in conformance with and for use under DOT special permit (SP) or exemption (E) 6498, 7042, 8107, 8364 or 8422 may be continued in use if marked before or at the time of the next retest with either the specification identification ''3AL'' immediately above the special permit or exemption number, or the DOT mark (e.g., DOT 3AL 1800) in proximity to the special permit or exemption marking.

(d) Cylinders (spheres) manufactured and marked under DOT special permit (SP) or exemption (E) 6616 prior to January 1, 1983, may be continued in use if marked before or at the time of the next retest with the specification identification ''4BA'' near the special permit or exemption marking.

(e) After October 1, 1984, cylinders manufactured for use under special permit (SP) or exemption (E) 6668 or 8404 may be continued in use, and must be marked ''DOT–4LXXXYY'' (XXX to be replaced by the service pressure, YY to be replaced by the letters ''AL'', if applicable) in compliance with Specification 4L (§178.57 of this subchapter) on or before January 1, 1986. The ''DOT–4LXXXYY'' must appear in proximity to other required special permit or exemption markings.

(f) An MC 331 cargo tank motor vehicle must conform to structural integrity requirements in §178.337–3 or to corresponding requirements in effect at the time of manufacture.

(g) A non-bulk packaging manufactured, tested, marked, and certified on or before September 30, 1996, in accordance with the applicable provisions of subparts L and M of part 178 of this subchapter in effect on September 30, 1995, may be used as authorized by this subchapter if the packaging conforms to all requirements applicable at the time of manufacture. In addition, such a packaging may be reused as authorized by §173.28 without a nominal thickness marking, if it conforms to the minimum thickness criteria prescribed in §173.28(b)(4).

[Amdt. 173–3, 33 FR 14921, Oct. 4, 1968]

EDITORIAL NOTE: For FEDERAL REGISTER citations affecting §173.23, see the List of CFR Sections Affected appearing in the Finding Aids section of this volume.

§173.24 General requirements for packagings and packages.

(a) Applicability. Except as otherwise provided in this subchapter, the provisions of this section apply to—

(1) Bulk and non-bulk packagings;

(2) New packagings and packagings which are reused; and

(3) Specification and non-specification packagings.

(b) Each package used for the shipment of hazardous materials under this subchapter shall be designed, constructed, maintained, filled, its contents so limited, and closed, so that under conditions normally incident to transportation—

(1) Except as otherwise provided in this subchapter, there will be no identifiable (without the use of instruments) release of hazardous materials to the environment;

(2) The effectiveness of the package will not be substantially reduced; for example, impact resistance, strength, packaging compatibility, etc. must be maintained for the minimum and maximum temperatures encountered during transportation;

(3) There will be no mixture of gases or vapors in the package which could, through any credible spontaneous increase of heat or pressure, significantly reduce the effectiveness of the packaging.

(c) Authorized packagings. A packaging is authorized for a hazardous material only if—

(1) The packaging is prescribed or permitted for the hazardous material in a packaging section specified for that material in Column 8 of the § 172.101 Table and conforms to applicable requirements in the special provisions of Column 7 of the § 172.101 Table and, for specification packagings (but not including UN standard packagings manufactured outside the United States), the specification requirements in parts 178 and 179 of this subchapter; or

(2) The packaging is permitted under, and conforms to, provisions contained in §§ 171.11, 171.12, 171.12a, 173.3, 173.4, 173.5, 173.7, 173.27, or 176.11 of this subchapter.

(d) Specification packagings and UN standard packagings manufactured outside the U.S.—(1) *Specification packagings.* A specification packaging, including a UN standard packaging manufactured in the United States, must conform in all details to the applicable specification or standard in part 178 or part 179 of this subchapter.

(2) UN standard packagings manufactured outside the United States. A UN standard packaging manufactured outside the United States, in accordance with national or international regulations based on the UN Recommendations on the Transport of Dangerous Goods, may be imported and used and is considered to be an authorized packaging under the provisions of paragraph (c)(1) of this section, subject to the following conditions and limitations:

(i) The packaging fully conforms to applicable provisions in the UN Recommendations on the Transport of Dangerous Goods and the requirements of this subpart, including reuse provisions;

(ii) The packaging is capable of passing the prescribed tests in part 178 of this subchapter applicable to that standard; and

(iii) The competent authority of the country of manufacture provides reciprocal treatment for UN standard packagings manufactured in the U.S.

(e) Compatibility. (1) Even though certain packagings are specified in this part, it is, nevertheless, the responsibility of the person offering a hazardous material for transportation to ensure that such packagings are compatible with their lading. This particularly applies to corrosivity, permeability, softening, premature aging and embrittlement.

(2) Packaging materials and contents must be such that there will be no significant chemical or galvanic reaction between the materials and contents of the package.

(3) Plastic packagings and receptacles. (i) Plastic used in packagings and receptacles must be of a type compatible with the lading and may not be permeable to an extent that a hazardous condition is likely to occur during transportation, handling or refilling.

(ii) Each plastic packaging or receptacle which is used for liquid hazardous materials must be capable of withstanding without failure the procedure specified in appendix B of this part (''Procedure for Testing Chemical Compatibility and Rate of Permeation in Plastic Packagings and Receptacles''). The procedure specified in appendix B of this part must be performed on each plastic packaging or receptacle used for Packing Group I materials. The maximum rate of permeation of hazardous lading through or into the plastic packaging or receptacles may not exceed 0.5 percent for materials meeting the definition of a Division 6.1 material according to § 173.132 and 2.0 percent for other hazardous materials, when subjected to a temperature no lower than—

(A) 18 °C (64 °F) for 180 days in accordance with Test Method 1 in appendix B of this part;

(B) 50 °C (122 °F) for 28 days in accordance with Test Method 2 in appendix B of this part; or

(C) 60 °C (140 °F) for 14 days in accordance with Test Method 3 in appendix B of this part.

(iii) Alternative procedures or rates of permeation are permitted if they yield a level of safety equivalent to or greater than that provided by paragraph (e)(3)(ii) of this section and are specifically approved by the Associate Administrator for Hazardous Materials Safety.

(4) Mixed contents. Hazardous materials may not be packed or mixed together in the same outer packaging with other hazardous or nonhazardous materials if such materials are capable of reacting dangerously with each other and causing—

(i) Combustion or dangerous evolution of heat;

(ii) Evolution of flammable, poisonous, or asphyxiant gases; or

(iii) Formation of unstable or corrosive materials.

(5) Packagings used for solids, which may become liquid at temperatures likely to be encountered during transportation, must be capable of containing the hazardous material in the liquid state.

(f) Closures. (1) Closures on packagings shall be so designed and closed that under conditions (including the effects of temperature and vibration) normally incident to transportation—

(i) Except as provided in paragraph (g) of this section, there is no identifiable release of hazardous materials to the environment from the opening to which the closure is applied; and

(ii) The closure is secure and leakproof.

(2) Except as otherwise provided in this subchapter, a closure (including gaskets or other closure components, if any) used on a specification packaging must conform to all applicable requirements of the specification.

(g) Venting. Venting of packagings, to reduce internal pressure which may develop by the evolution of gas from the contents, is permitted only when—

(1) Transportation by aircraft is not involved;

(2) Except as otherwise provided in this subchapter, the evolved gases are not poisonous, likely to create a flammable mixture with air or be an asphyxiant under normal conditions of transportation;

(3) The packaging is designed so as to preclude an unintentional release of hazardous materials from the receptacle; and

(4) For shipments in bulk packagings, venting is authorized for the specific hazardous material by a special provision in the §172.101 Table or by the applicable bulk packaging specification in part 178 of this subchapter.

(h) Outage and filling limits—(1) *General.* When filling packagings and receptacles for liquids, sufficient ullage (outage) must be left to ensure that neither leakage nor permanent distortion of the packaging or receptacle will occur as a result of an expansion of the liquid caused by temperatures likely to be encountered during transportation. Requirements for outage and filling limits for non-bulk and bulk packagings are specified in §§173.24a(d) and 173.24b(a), respectively.

(2) *Compressed gases and cryogenic liquids.* Filling limits for compressed gases and cryogenic liquids are specified in §§173.301 through 173.306 for cylinders and §§173.314 through 173.319 for bulk packagings.

(i) Air transportation. Packages offered or intended for transportation by aircraft must conform to the general requirements for transportation by aircraft in §173.27, except as provided in §171.11 of this subchapter.

[Amdt. 173–224, 55 FR 52610, Dec. 21, 1990, as amended by Amdt. 173–227, 56 FR 49989, Oct. 2, 1991; 56 FR 66265, Dec. 20, 1991; Amdt. 173–238, 59 FR 38064, July 26, 1994; Amdt. 173–241, 59 FR 67491, Dec. 29, 1994; Amdt. 173–242, 60 FR 26805, May 18, 1995]

§173.24a Additional general requirements for non-bulk packagings and packages.

(a) Packaging design. Except as provided in §172.312 of this subchapter:

(1) *Inner packaging closures.* A combination packaging containing liquid hazardous materials must be packed so

that closures on inner packagings are upright.

(2) *Friction*. The nature and thickness of the outer packaging must be such that friction during transportation is not likely to generate an amount of heat sufficient to alter dangerously the chemical stability of the contents.

(3) *Securing and cushioning.* Inner packagings of combination packagings must be so packed, secured and cushioned to prevent their breakage or leakage and to control their movement within the outer packaging under conditions normally incident to transportation. Cushioning material must not be capable of reacting dangerously with the contents of the inner packagings or having its protective properties significantly weakened in the event of leakage.

(4) *Metallic devices.* Nails, staples and other metallic devices shall not protrude into the interior of the outer packaging in such a manner as to be likely to damage inner packagings or receptacles.

(5) *Vibration*. Each non-bulk package must be capable of withstanding, without rupture or leakage, the vibration test procedure specified in § 178.608 of this subchapter.

(b) Non-bulk packaging filling limits. (1) A single or composite non-bulk packaging may be filled with a liquid hazardous material only when the specific gravity of the material does not exceed that marked on the packaging, or a specific gravity of 1.2 if not marked, except as follows:

(i) A Packing Group I packaging may be used for a Packing Group II material with a specific gravity not exceeding the greater of 1.8, or 1.5 times the specific gravity marked on the packaging, provided all the performance criteria can still be met with the higher specific gravity material;

(ii) A Packing Group I packaging may be used for a Packing Group III material with a specific gravity not exceeding the greater of 2.7, or 2.25 times the specific gravity marked on the packaging, provided all the performance criteria can still be met with the higher specific gravity material; and

(iii) A Packing Group II packaging may be used for a Packing Group III material with a specific gravity not exceeding the greater of 1.8, or 1.5 times the specific gravity marked on the packaging, provided all the performance criteria can still be met with the higher specific gravity material.

(2) Except as otherwise provided in this section, a non-bulk packaging may not be filled with a hazardous material to a gross mass greater than the maximum gross mass marked on the packaging.

(3) A single or composite non-bulk packaging which is tested and marked for liquid hazardous materials may be filled with a solid hazardous material to a gross mass, in kilograms, not exceeding the rated capacity of the packaging in liters, multiplied by the specific gravity marked on the packaging, or 1.2 if not marked. In addition:

(i) A single or composite non-bulk packaging which is tested and marked for Packing Group I liquid hazardous materials may be filled with a solid Packing Group II hazardous material to a gross mass, in kilograms, not exceeding the rated capacity of the packaging in liters, multiplied by 1.5, multiplied by the specific gravity marked on the packaging, or 1.2 if not marked.

(ii) A single or composite non-bulk packaging which is tested and marked for Packing Group I liquid hazardous materials may be filled with a solid Packing Group III hazardous material to a gross mass, in kilograms, not exceeding the rated capacity of the packaging in liters, multiplied by 2.25, multiplied by the specific gravity marked on the packaging, or 1.2 if not marked.

(iii) A single or composite non-bulk packaging which is tested and marked for Packing Group II liquid hazardous materials may be filled with a solid Packing Group III hazardous material to a gross mass, in kilograms, not exceeding the rated capacity of the packaging in liters, multiplied by 1.5, multiplied by the specific gravity marked on the packaging, or 1.2 if not marked.

(4) Packagings tested as prescribed in § 178.605 of this subchapter and marked with the hydrostatic test pressure as prescribed in § 178.503(a)(5) of this subchapter may be used for liquids only when the vapor pressure of the liquid conforms to one of the following:

(i) The vapor pressure must be such that the total pressure in the packaging (i.e., the vapor pressure of the liquid plus the partial pressure of air or other inert gases, less 100 kPa (15 psi)) at 55 °C (131 °F), determined on the basis of a maximum degree of filling in accordance with paragraph (d) of this section and a filling temperature of 15 °C (59 °F)), will not exceed two-thirds of the marked test pressure;

(ii) The vapor pressure at 50 °C (122 °F) must be less than four-sevenths of the sum of the marked test pressure plus 100 kPa (15 psi); or

(iii) The vapor pressure at 55 °C (131 °F) must be less than two-thirds of the sum of the marked test pressure plus 100 kPa (15 psi).

(5) No hazardous material may remain on the outside of a package after filling.

(c) Mixed contents. (1) An outer nonbulk packaging may contain more than one hazardous material only when—

(i) The inner and outer packagings used for each hazardous material conform to the relevant packaging sections of this part applicable to that hazardous material;

(ii) The package as prepared for shipment meets the performance tests prescribed in part 178 of this subchapter for the packing group indicating the highest order of hazard for the hazardous materials contained in the package;

(iii) Corrosive materials (except ORM–D) in bottles are further packed in securely closed inner receptacles before packing in outer packagings; and

(iv) For transportation by aircraft, the total net quantity does not exceed the lowest permitted maximum net quantity per package as shown in Column 9a or 9b, as appropriate, of the §172.101 Table. The permitted maximum net quantity must be calculated in kilograms if a package contains both a liquid and a solid.

(2) A packaging containing inner packagings of Division 6.2 materials may not contain other hazardous materials, except dry ice.

(d) Liquids must not completely fill a receptacle at a temperature of 55 °C (131 °F) or less.

[Amdt. 173–224, 55 FR 52611, Dec. 21, 1990, as amended at 56 FR 66265, Dec. 20, 1991; 57 FR 45460, Oct. 1, 1992; 58 FR 51532, Oct. 1, 1993; Amdt. 173–255, 61 FR 50624, Sept. 26, 1996]

§173.24b Additional general requirements for bulk packagings.

(a) *Outage and filling limits.* (1) Except as otherwise provided in this subchapter, liquids and liquefied gases must be so loaded that the outage is at least five percent for materials poisonous by inhalation, or at least one percent for all other materials, of the total capacity of a cargo tank, portable tank, tank car (including dome capacity), multi-unit tank car tank, or any compartment thereof, at the following reference temperatures—

(i) 46 °C (115 °F) for a noninsulated tank;

(ii) 43 °C (110 °F) for a tank car having a thermal protection system, incorporating a metal jacket that provides an overall thermal conductance at 15.5 °C (60 °F) of no more than 10.22 kilojoules per hour per square meter per degree Celsius (0.5 Btu per hour/per square foot/ per degree F) temperature differential; or

(iii) 41 °C (105 °F) for an insulated tank.

(2) Hazardous materials may not be loaded into the dome of a tank car. If the dome of the tank car does not provide sufficient outage, vacant space must be left in the shell to provide the required outage.

(b) *Equivalent steel.* For the purposes of this section, the reference stainless steel is stainless steel with a guaranteed minimum tensile strength of 51.7 deka newtons per square millimeter (75,000 psi) and a guaranteed elongation of 40 percent or greater. Where the regulations permit steel other than stainless steel to be used in place of a specified stainless steel (for example, as in §172.102 of this subchapter, special provision B30), the minimum thickness for the steel must be obtained from one of the following formulas, as appropriate:

Formula for metric units:

$e_1=(12.74e_0)/(Rm_1 A_1)^{1/3}$

Formula for non-metric units:

$e_1=(144.2e_0)/(Rm_1 A_1)^{1/3}$

where:

e_0=Required thickness of the reference stainless steel in millimeters or inches respectively;

e_1=Equivalent thickness of the steel used in millimeters or inches respectively;

Rm_1=Specified minimum tensile strength of the steel used in deka-newtons per square millimeter or pounds per square inch respectively; and

A_1=Specified minimum percentage elongation of the steel used multiplied by 100 (for example, 20 percent times 100 equals 20). Elongation values used must be determined from a 50 mm or 2 inch test specimen.

(c) Air pressure in excess of ambient atmospheric pressure may not be used to load or unload any lading which may create an air-enriched mixture within the flammability range of the lading in the vapor space of the tank.

(d) A bulk packaging may not be loaded with a hazardous material that:

(1) Is at a temperature outside of the packaging's design temperature range; or

(2) Except as otherwise provided in this subchapter, exceeds the maximum weight of lading marked on the specification plate.

[Amdt. 173–224, 55 FR 52612, Dec. 21, 1990, as amended at 56 FR 66266, Dec. 20, 1991; Amdt. 173–234, 58 FR 51532, Oct. 1, 1993; Amdt. 173–243, 60 FR 40038, Aug. 4, 1995; Amdt. 173–252, 61 FR 28676, June 5, 1996; Amdt. 173–255, 61 FR 50624, Sept. 26, 1996]

§ 173.25 Authorized packages and overpacks.

(a) Authorized packages containing hazardous materials may be offered for transportation in an overpack as defined in § 171.8 of this subchapter, if all of the following conditions are met:

(1) The package meets the requirements of §§ 173.21 and 173.24 of this subchapter.

(2) The overpack is marked with the proper shipping name and identification number, and labeled as required by this subchapter for each hazardous material contained therein unless markings and labels representative of each hazardous material in the overpack are visible.

(3) Each package subject to the orientation marking requirements of § 172.312 of this subchapter is packed in the overpack with its filling holes up and the overpack is marked with package orientation marking arrows on two opposite vertical sides of the overpack with the arrows pointing in the correct direction of orientation.

(4) The overpack is marked with a statement indicating that the inside (inner) packages comply with prescribed specifications when specification packagings are required, unless specification markings on the inside packages are visible.

(5) Packages containing Class 8 (corrosive) materials in Packing Group I or Division 5.1 (oxidizing) materials in Packing Group I may not be overpacked with any other materials.

(b) Shrink-wrapped or stretch-wrapped trays may be used as outer packagings for inner packagings prepared in accordance with the limited quantity provisions or consumer commodity provisions of this subchapter, provided that the complete package is capable of meeting performance standards at the Packing Group III performance level. Each package may not exceed 20 kg (44 lbs) gross weight.

(c) Hazardous materials which are required to be labeled POISON may be transported in the same motor vehicle with material that is marked or known to be foodstuffs, feed or any edible material intended for consumption by humans or animals provided the hazardous material is marked, labeled, and packaged in accordance with this subchapter, conforms to the requirements of paragraph (a) of this section and is overpacked as specified in § 177.841(e) of this subchapter or in an overpack which is a UN 1A2, 1B2, or 1N2 drum tested and marked for a Packing Group II or higher performance level.

[Amdt. 173–165, 48 FR 28099, June 20, 1983, as amended by Amdt. 173–224, 55 FR 52612 Dec. 21, 1990; 56 FR 66266, Dec. 20, 1991; Amdt. 173–234, 58 FR 51532, Oct. 1, 1993; Amdt. 173–214, 59 FR 67491, Dec. 29, 1994]

§ 173.26 Quantity limitations.

When quantity limitations do not appear in the packaging requirements of this subchapter, the permitted gross weight or capacity authorized for a

packaging is as shown in the packaging specification or standard in part 178 or 179, as applicable, of this subchapter.

[Amdt. 173–224, 55 FR 52612, Dec. 21, 1990]

§173.27 General requirements for transportation by aircraft.

(a) The requirements of this section are in addition to the requirements in §173.24 and apply to packages offered or intended for transportation aboard aircraft. Notwithstanding any Packing Group III performance level specified in Column 5 of the §172.101 Table, the required performance level for packages containing Class 4, 5, or 8 materials, when offered or intended for transportation aboard aircraft, is at the Packing Group II performance level, unless otherwise excepted from performance requirements in subpart E of this part.

(b) Packages authorized on board aircraft. (1) When Column 9a of the §172.101 Table indicates that a material is ''Forbidden'', that material may not be offered for transportation or transported aboard passenger-carrying aircraft.

(2) When Column 9b of the §172.101 Table indicates that a material is ''Forbidden'', that material may not be offered for transportation or transported aboard aircraft.

(3) The maximum quantity of hazardous material in a package that may be offered for transportation or transported aboard a passenger-carrying aircraft or cargo aircraft may not exceed that quantity prescribed for the material in Column 9a or 9b, respectively, of the §172.101 Table.

(4) A package containing a hazardous material which is authorized aboard cargo aircraft but not aboard passenger aircraft must be labeled with the CARGO AIRCRAFT ONLY label required by §172.402(b) of this subchapter and may not be offered for transportation or transported aboard passenger-carrying aircraft.

(c) Pressure requirements. (1) Packagings must be designed and constructed to prevent leakage that may be caused by changes in altitude and temperature during transportation aboard aircraft.

(2) Packagings for which retention of liquid is a basic function must be capable of withstanding without leakage the greater of—

(i) An internal pressure which produces a gauge pressure of not less than 75 kPa (11 psi) for liquids in Packing Group III of Class 3 or Division 6.1. or 95 kPa (14 psi) for other liquids; or

(ii) A pressure related to the vapor pressure of the liquid to be conveyed, determined by one of the following:

(A) The total gauge pressure measured in the receptacle (i.e., the vapor pressure of the material and the partial pressure of air or other inert gases, less 100 kPa (15 psi)) at 55 °C (131 °F), multiplied by a safety factor of 1.5; determined on the basis of a filling temperature of 15 °C (59 °F) and a degree of filling such that the receptacle is not completely liquid full at a temperature of 55 °C (131 °F) or less;

(B) 1.75 times the vapor pressure at 50 °C (122 °F) less 100 kPa (15 psi); or

(C) 1.5 times the vapor pressure at 55 °C (131 °) less 100 kPa (15 psi).

(3) Notwithstanding the provisions of paragraph (c)(2) of this section—

(i) Hazardous materials may be contained in an inner packaging which does not itself meet the pressure requirement provided that the inner packaging is packed within a supplementary packaging which does meet the pressure requirement and other applicable packaging requirements of this subchapter.

(ii) Packagings which are subject to the hydrostatic pressure test and marking requirements of §§178.605 and 178.503(a)(5), respectively, of this subchapter must have a marked test pressure of not less than 250 kPa (36 psi) for liquids in Packing Group I, 80 kPa (12 psi) for liquids in Packing Group III of Class 3 or Division 6.1, and 100 kPa (15 psi) for other liquids.

(d) Closures. Stoppers, corks or other such friction-type closures must be held securely, tightly and effectively in place by positive means. Each screw-type closure on any packaging must be secured to prevent closure from loosening due to vibration or substantial change in temperature.

(e) Absorbent materials. Except as otherwise provided in this subchapter, liquids in Packing Group I or II of Class 3, 4, 5, 6, or 8, when in glass or earthenware inner packagings, must be

packaged using material capable of absorbing and not likely to react dangerously with the liquid. Absorbent material is not required if the inner packagings are so protected that breakage of them and leakage of their contents from the outer packaging is not likely to occur under normal conditions of transportation and is not required for packagings containing liquids in Packing Group II for transport aboard cargo aircraft only. Where absorbent material is required and an outer packaging is not liquid-tight, a means of containing the liquid in the event of leakage must be used in the form of a leakproof liner, plastic bag or other equally efficient means of containment. Where absorbent material is required, the quantity and disposition of it in each outer packaging must be as follows:

(1) For packagings containing liquids in Packing Group I offered for transportation or transported aboard passenger-carrying aircraft, each packaging must contain sufficient absorbent material to absorb the contents of all inner packagings containing such liquids;

(2) For packagings containing liquids in Packing Group I offered for transportation or transported aboard cargo aircraft only and packagings containing liquids in Packing Group II offered for transportation or transported aboard passenger aircraft, each package must contain sufficient absorbent material to absorb the contents of any one of the inner packagings containing such liquids and, where they are of different sizes and quantities, sufficient absorbent material to absorb the contents of the inner packaging containing the greatest quantity of liquid.

(f) Combination packagings. Unless otherwise specified in this part, or in § 171.11 of this subchapter, when combination packagings are offered for transportation aboard aircraft, inner packagings must conform to the quantity limitations set forth in Table 1 of this paragraph for transport aboard passenger-carrying aircraft and Table 2 of this paragraph for transport aboard cargo aircraft only, as follows:

TABLE 1.—MAXIMUM NET CAPACITY OF INNER PACKAGING FOR TRANSPORTATION ON PASSENGER-CARRYING AIRCRAFT

Maximum net quantity per package from Column 9a of the § 172.101 Table	Maximum authorized net capacity *of each inner packaging*	
	Glass, earthenware or fiber inner packagings	Metal or plastic inner packagings
Liquids:		
Not greater than 0.5L	0.5L	0.5L.
Greater than 0.5L. not greater than IL	0.5L	lL.
Greater than 1L, not greater than 5L	1L	5L.
Greater than 5L, not greater than 60L	2.5L	10L.
Greater than 60L, not greater than 220L	5L	25L.
Greater than 220L	No limit	No limit.
Solids:		
Not greater than 5 kg	0.5 kg	1 kg.
Greater than 5 kg, not greater than 25 kg	1 kg	2.5 kg.
Greater than 25 kg, not greater than 200 kg	5 kg	10 kg.
Greater than 200 kg	No limit	No limit.

TABLE 2.—MAXIMUM NET CAPACITY OF INNER PACKAGING FOR TRANSPORTATION ON CARGO AIRCRAFT

Maximum net quantity per package from Column 9b of the § 172.101 Table	Maximum authorized net capacity *of each inner packaging*	
	Glass, earthenware or fiber inner packagings	Metal or plastic inner packagings
Liquids:		
Not greater than 2.5L	1L	1L.
Greater than 2.5L, not greater than 30L	2.5L	2.5L.
Greater than 30L, not greater than 60L	5L	10L.

TABLE 2.—MAXIMUM NET CAPACITY OF INNER PACKAGING FOR TRANSPORTATION ON CARGO AIRCRAFT—Continued

Maximum net quantity per package from Column 9b of the §172.101 Table	Maximum authorized net capacity *of each inner packaging*	
	Glass, earthenware or fiber inner packagings	Metal or plastic inner packagings
Greater than 60L, not greater than 220L	5L	25L.
Greater than 220L	No limit	No limit.
Solids:		
Not greater than 15 kg	1 kg	2.5 kg.
Greater than 15 kg, not greater than 50 kg	2.5 kg	5 kg.
Greater than 50 kg, not greater than 200 kg	5 kg	10 kg.
Greater than 200 kg	No limit	No limit.

(g) Cylinders. For any cylinder containing hazardous materials and incorporating valves, sufficient protection must be provided to prevent operation of, and damage to, the valves during transportation, by one of the following methods:

(1) By equipping each cylinder with securely attached valve caps or protective headrings; or

(2) By boxing or crating the cylinder.

(h) Tank cars and cargo tanks. Any tank car or cargo tank containing a hazardous material may not be transported aboard aircraft.

[Amdt. 173–224, 55 FR 52612, Dec. 21, 1990, as amended at 56 FR 66266, Dec. 20, 1991; Amdt. 173–138, 59 FR 49133, Sept. 26, 1994]

§173.28 Reuse, reconditioning and remanufacture of packagings.

(a) *General.* Packagings and receptacles used more than once must be in such condition, including closure devices and cushioning materials, that they conform in all respects to the prescribed requirements of this subchapter. Before reuse, each packaging must be inspected and may not be reused unless free from incompatible residue, rupture, or other damage which reduces its structural integrity.

(b) *Reuse of non-bulk packaging.* A non-bulk packaging used more than once must conform to the following provisions and limitations:

(1) A non-bulk packaging which, upon inspection, shows evidence of a reduction in integrity may not be reused unless it is reconditioned in accordance with paragraph (c) of this section.

(2) Before reuse, packagings subject to the leakproofness test with air prescribed in §178.604 of this subchapter shall be—

(i) Retested without failure in accordance with §178.604 of this subchapter using an internal air pressure (gauge) of at least 48 kPa (7.0 psi) for Packing Group I and 20 kPa (3.0 psi) for Packing Group II and Packing Group III; and

(ii) Marked with the letter ''L'', with the name and address or symbol of the person conducting the test, and the last two digits of the year the test was conducted. Symbols, if used, must be registered with the Associate Administrator for Hazardous Materials Safety.

(3) Packagings made of paper, plastic film, or textile are not authorized for reuse;

(4) Metal and plastic drums and jerricans used as single packagings or the outer packagings of composite packagings are authorized for reuse only when they are marked in a permanent manner (e.g., embossed) in millimeters with the nominal (for metal packagings) or minimum (for plastic packagings) thickness of the packaging material, as required by §178.503(a)(9) of this subchapter, and—

(i) Except as provided in paragraph (b)(4)(ii) of this section, conform to the following minimum thickness criteria:

Maximum capacity not over	Minimum thickness of packaging material	
	Metal drum or jerrican	Plastic drum or jerrican
20 L	0.63 mm (0.025 inch)	1.1 mm (0.043 inch).
30 L	0.73 mm (0.029 inch)	1.1 mm (0.043 inch).
40 L	0.73 mm (0.029 inch)	1.8 mm (0.071 inch).
60 L	0.92 mm (0.036 inch)	1.8 mm (0.071 inch).
120 L	0.92 mm (0.036 inch)	2.2 mm (0.087 inch).
220 L	0.92 mm (0.036 inch) [1].	2.2 mm (0.087 inch).
450 L	1.77 mm (0.070 inch)	5.0 mm (0.197 inch).

[1] Metal drums or jerricans with a minimum thickness of 0.82 mm body and 1.09 mm heads which are manufactured and marked prior to January 1, 1997 may be reused. Metal drums or jerricans manufactured and marked on or after January 1, 1997, and intended for reuse, must be constructed with a minimum thickness of 0.82 mm body and 1.11 mm heads.

(ii) For stainless steel drums and jerricans, conform to a minimum wall thickness as determined by the following equivalence formula:

Formula for Metric Units

$$e_1 = \frac{21.4 \times e_0}{\sqrt[3]{Rm_1 \times A_1}}$$

Formula for U.S. Standard Units

$$e_1 = \frac{21.4 \times e_0}{\sqrt[3]{(Rm_1 \times A_1)/145}}$$

where:

e_1=required equivalent wall thickness of the metal to be used (in mm or, for U.S. Standard units, use inches).

e_0=required minimum wall thickness for the reference steel (in mm or, for U.S. Standard units, use inches).

Rm_1=guaranteed minimum tensile strength of the metal to be used (in N/mm^2 or for U.S. Standard units, use pounds per square inch).

A_1=guaranteed minimum elongation (as a percentage) of the metal to be used on fracture under tensile stress (see paragraph (c)(1) of this section).

(5) Plastic inner receptacles of composite packagings must have a minimum thickness of 1.0 mm (0.039 inch).

(6) A previously used non-bulk packaging may be reused for the shipment of hazardous waste, not subject to the reconditioning and reuse provisions of this section, in accordance with § 173.12(c).

(7) Notwithstanding the provisions of paragraph (b)(2) of this section, a packaging otherwise authorized for reuse may be reused without being leakproofness tested with air provided the packaging—

(i) Is refilled with a material which is compatible with the previous lading:

(ii) Is refilled and offered for transportation by the original filler;

(iii) Is transported in a transport vehicle or freight container under the exclusive use of the refiller of the packaging; and

(iv) Is constructed of—

(A) Stainless steel, monel or nickel with a thickness not less than one and one-half times the minimum thickness prescribed in paragraph (b)(4) of this section;

(B) Plastic, provided the packaging is not refilled for reuse on a date more than five years from the date of manufacture marked on the packaging in accordance with § 178.503(a)(6) of this subchapter; or

(C) another material or thickness when approved under the conditions established by the Associate Administrator for Hazardous Materials Safety for reuse without retesting.

(c) *Reconditioning of non-bulk packaging.* (1) For the purpose of this subchapter, reconditioning of metal drums is:

(i) Cleaning to base material of construction, with all former contents, internal and external corrosion, and any external coatings and labels removed;

(ii) Restoring to original shape and contour, with chimes (if any) straightened and sealed, and all non-integral gaskets replaced: and

(iii) Inspecting after cleaning but before painting, Packagings that have visible pitting, significant reduction in material thickness, metal fatigue, damaged threads or closures, or other significant defects, must be rejected.

(2) For the purpose of this subchapter, reconditioning of a non-bulk packaging other than a metal drum or a UN 1H1 plastic drum is restoring the packaging by repair, or replacement of non-integral packaging components (such as removable gaskets, closure devices, cushioning material, etc.) to a condition such that it conforms in all respects with the prescribed requirements of this subchapter. For a UN 1H1 plastic drum, replacing a removable gasket or closure device with a replacement of the same design and material

which provides equivalent performance does not constitute reconditioning. Packagings which have significant defects which cannot be repaired may not be reused.

(3) A person who reconditions a packaging manufactured and marked under the provisions of subpart L of part 178 of this subchapter, shall mark that packaging as required by §178.503(c) and (d) of this subchapter. The marking is the certification of the reconditioner that the packaging conforms to the standard for which it is marked and that all functions performed by the reconditioner which are prescribed by this subchapter have been performed in compliance with this subchapter.

(4) The markings applied by the reconditioner may be different from those applied by the manufacturer at the time of original manufacture, but may not identify a greater performance capability than that for which the original design type had been tested (for example, the reconditioner may mark a drum which was originally marked as 1A1/Y1.8 as 1A1/Y1.2 or 1A1/Z2.0).

(d) *Remanufacture of non-bulk packagings.* For the purpose of this subchapter, remanufacture is the conversion of a non-specification, non-bulk packaging to a DOT specification or U.N. standard, the conversion of a packaging meeting one specification or standard to another specification or standard (for example, conversion of 1A1 non-removable head drums to 1A2 removable head drums) or the replacement of integral structural packaging components (such as non-removable heads on drums). A person who remanufactures a non-bulk packaging to conform to a specification or standard in part 178 of this subchapter is subject to the requirements of part 178 of this subchapter as a manufacturer.

(e) *Non-reusable containers.* A packaging marked as NRC according to the DOT specification or UN standard requirements of part 178 of this subchapter may be reused for the shipment of any material not required by this subchapter to be shipped in a DOT specification or UN standard packaging.

[Amdt. 173–224, 55 FR 52614, Dec. 21, 1990, as amended at 56 FR 66266, Dec. 20, 1991; 57 FR 45460, Oct. 1, 1992; Amdt. 173–241, 59 FR 67491, 67492, Dec. 29, 1994; 60 FR 7627, Feb. 8, 1995; Amdt. 173–241, 60 FR 26805, 26806, May 18, 1995 Amdt. 173–255, 61 FR 50624, 50265, Sept. 26, 1996; 61 FR 51495, Oct. 2, 1996; Amdt. 173–254, 62 FR 14338, Mar. 26, 1997]

§173.29 Empty packagings.

(a) General. Except as otherwise provided in this section, an empty packaging containing only the residue of a hazardous material shall be offered for transportation and transported in the same manner as when it previously contained a greater quantity of that hazardous material.

(b) Notwithstanding the requirements of paragraph (a) of this section, an empty packaging is not subject to any other requirements of this subchapter if it conforms to the following provisions:

(1) Any hazardous material shipping name and identification number markings, and any hazard warning labels or placards are removed, obliterated, or securely covered in transportation. This provision does not apply to transportation in a transport vehicle or a freight container if the packaging is not visible during transportation and the packaging is loaded by the shipper and unloaded by the shipper or consignee;

(2) The packaging—

(i) Is unused;

(ii) Is sufficiently cleaned of residue and purged of vapors to remove any potential hazard;

(iii) Is refilled with a material which is not hazardous to such an extent that any residue remaining in the packaging no longer poses a hazard; or

(iv) Contains only the residue of—

(A) An ORM–D material; or

(B) A non-flammable gas with no subsidiary hazard at an absolute pressure less than 276 kPa (40 psia); at 21 °C (70 °F); and

(3) Any material contained in the packaging does not meet the definitions in §171.8 of this subchapter for a hazardous substance, a hazardous waste, or a marine pollutant.

(c) A non-bulk packaging containing only the residue of a hazardous material covered by Table 2 of § 172.504 of this subchapter—

(1) Does not have to be included in determining the applicability of the placarding requirements of subpart F of part 172 of this subchapter; and

(2) Is not subject to the shipping paper requirements of this subchapter when collected and transported by a contract or private carrier for reconditioning, remanufacture or reuse.

(d) Notwithstanding the stowage requirements in Column 10a of the § 172.101 Table for transportation by vessel, an empty drum or cylinder may be stowed on deck or under deck.

(e) Specific provisions for describing an empty packaging on a shipping paper appear in § 172.203(e) of this subchapter.

(f) [Reserved]

(g) A package which contains a residue of an elevated temperature material may remain marked in the same manner as when it contained a greater quantity of the material even though it no longer meets the definition in § 171.8 of this subchapter for an elevated temperature material.

[Amdt. 173–224, 55 FR 52614, Dec. 21, 1990, as amended by Amdt. 173–227, 56 FR 49989, Oct. 2, 1991; Amdt. 173–231, 57 FR 52939, Nov. 5, 1992; Amdt. 173–251, 61 FR 28676, June 5, 1996]

EFFECTIVE DATE NOTE: By Amdt. 173–260, 62 FR 1236, Jan. 8, 1997, § 173.29(b)(1) was revised, effective Oct. 1, 1997. At 62 FR 39398, July 22, 1997, the effective date was delayed until Oct. 1, 1998. For the convenience of the user the revised text is set forth as follows:

§ 173.29 Empty packagings.

* * * * *

(b) * * *

(1) Any hazardous material shipping name and identification number markings, any hazard warning labels or placards, and any other markings indicating that the material is hazardous (*e.g.,* RQ, INHALATION HAZARD) are removed, obliterated, or securely covered in transportation. This provision does not apply to transportation in a transport vehicle or a freight container if the packaging is not visible in transportation and the packaging is loaded by the shipper and unloaded by the shipper or consignee;

* * * * *

§ 173.30 Loading and unloading of transport vehicles.

A person who loads or unloads hazardous materials into or from a transport vehicle or vessel shall comply with the applicable loading and unloading requirements of parts 174, 175, 176, and 177 of this subchapter.

[Amdt. 173–94, 41 FR 16064, Apr. 15, 1976]

§ 173.31 Use of tank cars.

(a) *General.* (1) No person may offer a hazardous material for transportation in a tank car unless the tank car meets the applicable specification and packaging requirements of this subchapter or, when this subchapter authorizes the use of an non-DOT specification tank car, the applicable specification to which the tank was constructed.

(2) Tank cars and appurtenances may be used for the transportation of any commodity for which they are authorized in this part and specified on the certificate of construction (AAR Form 4–2 or by addendum on Form R–1). See § 179.5 of this subchapter. Transfer of a tank car from one specified service on its certificate of construction to another may be made only by the owner or with the owner's authorization. A tank car proposed for a commodity service other than specified on its certificate of construction must be approved for such service by the AAR's Tank Car Committee.

(3) No person may fill a tank car overdue for periodic inspection with a hazardous material and then offer it for transportation. Any tank car marked as meeting a DOT specification and any non-specification tank car transporting a hazardous material must have a periodic inspection and test conforming to Subpart F of Part 180 of this subchapter.

(4) No railroad tank car, regardless of its construction date, may be used for the transportation in commerce of any hazardous material unless the air brake equipment support attachments of such tank car conform to the standards for attachments set forth in §§ 179.100–16 and 179.200–19 of this subchapter.

(5) No railroad tank car, regardless of its construction date, may be used for the transportation in commerce of any

hazardous material with a self-energized manway located below the liquid level of the lading.

(6) Unless otherwise specifically provided in this part:

(i) When the tank car delimiter is an ''A,'' offerors may also use tank cars with a delimiter ''S,'' ''J'' or ''T''.

(ii) When the tank car delimiter is an ''S,'' offerors may also use tank cars with a delimiter ''J'' or ''T''.

(iii) When a tank car delimiter is a ''T'' offerors may also use tank cars with a delimiter of ''J''.

(iv) When a tank car delimiter is a ''J'', offerors may not use a tank car with any other delimiter.

(b) *Safety systems*—(1) *Coupler vertical restraint.* Each tank car conforming to a DOT specification and any other tank car used for transportation of a hazardous material must be equipped with a coupler vertical restraint system that meets the requirements of §179.14 of this subchapter.

(2) *Pressure relief devices.* (i) Pressure relief devices on tank cars must conform to Part 179 of this subchapter.

(ii) Except for shipments of chloroprene, inhibited, in class DOT 115 tank cars, single-unit tank cars used for materials meeting the definition for Division 6.1 liquid, Packing Group I or II, Class 2 materials, or Class 3 or 4 liquids, must have self-closing pressure relief devices. However, a tank car built before January 1, 1991, and equipped with a non-closing pressure relief device may be used to transport a Division 6.1 or Class 4 liquid if the liquid is not poisonous by inhalation. Unless otherwise specifically provided in this subchapter, frangible discs may not have breather holes.

(3) *Tank-head puncture-resistance requirements.* The following tank cars must have a tank-head puncture-resistance system that conforms to the requirements in §179.16 of this subchapter, or to the corresponding requirements in effect at the time of installation:

(i) Tank cars transporting a Class 2 material.

(ii) Tank cars constructed from aluminum or nickel plate that are used to transport hazardous material.

(iii) Except as provided in paragraph (b)(3)(iv) of this section, those tank cars specified in paragraphs (b)(3)(i) and (ii) of this section not requiring a tank-head puncture resistance system prior to July 1, 1996, must have a tank-head puncture resistance system installed no later than July 1, 2006.

(iv) Class DOT 105A tank cars built prior to September 1, 1981, having a tank capacity less than 70 kl (18,500 gallons), and used to transport a Division 2.1 (flammable gas) material, must have a tank-head puncture-resistant system installed no later than July 1, 2001.

(4) *Thermal protection requirements.* The following tank cars must have thermal protection that conforms to the requirements of §179.18 of this subchapter:

(i) Tank cars transporting a Class 2 material, except for a class 106, 107A, 110, and 113 tank car. A tank car equipped with a thermal protection system conforming to §179.18 of this subchapter, or that has an insulation system having an overall thermal conductance of no more than 0.613 kilojoules per hour, per square meter, per degree Celsius temperature differential (0.03 B.t.u. per square foot, per hour, per degree Fahrenheit temperature differential), conforms to this requirement.

(ii) A tank car transporting a Class 2 material that was not required to have thermal protection prior to July 1, 1996, must be equipped with thermal protection no later than July 1, 2006.

(5) *Bottom-discontinuity protection requirements.* No person may offer for transportation a hazardous material in a tank car with bottom discontinuity protection unless the tank car has bottom-discontinuity protection that conforms to the requirements of E9.00 and E10.00 of the AAR Specifications for Tank Cars. Tank cars not requiring bottom-discontinuity protection under the terms of Appendix Y of the AAR Specifications for Tank Cars as of July 1, 1996, must conform to these requirements no later than July 1, 2006. Tank cars modified before July 1, 1996, may conform to the bottom-discontinuity protection requirements of Appendix Y of the 1992 edition of the AAR Specifications for Tank Cars.

(6) *Scheduling of modifications and progress reporting.* The date of conformance for the continued use of tank cars subject to paragraphs (b)(3), (b)(4), (b)(5), (e)(2), and (f) of this section and §§ 173.314(j) and 173.323(c)(1) is subject to the following conditions and limitations.

(i) Each tank car owner shall modify, reassign, retire, or remove at least 50 percent of their in-service tank car fleet within the first half of the compliance period and the remainder of their in-service tank car fleet during the second half of the compliance period.

(ii) By October 1 of each year, each owner of a tank car subject to this paragraph (b)(6) shall submit to the Hazardous Materials Division (RRS–12), Office of Safety Assurance and Compliance, Federal Railroad Administration, 400 7th Street, SW., Washington, DC 20590–0001, a progress report that shows the total number of in-service tank cars that need head protection, thermal protection, or bottom-discontinuity protection; the number of new or different tank cars acquired to replace those tank cars required to be upgraded to a higher service pressure; and the total number of tank cars modified, reassigned, acquired, retired, or removed from service the previous year.

(c) *Tank car test pressure.* A tank car used for the transportation of a hazardous material must have a tank test pressure equal to or greater than the greatest of the following:

(1) Except for shipments of carbon dioxide, anhydrous hydrogen chloride, vinyl fluoride, ethylene, or hydrogen, 133 percent of the sum of lading vapor pressure at the reference temperature of 46 °C (115 °F) for non-insulated tank cars or 41 °C (105 °F) for insulated tank cars plus static head, plus gas padding pressure in the vacant space of a tank car;

(2) 133 percent of the maximum loading or unloading pressure, whichever is greater;

(3) 20.7 Bar (300 psi) for materials that are poisonous by inhalation (see § 173.31(e)(2)(ii) for compliance dates);

(4) The minimum pressure prescribed by the specification in Part 179 of this subchapter; or

(5) The minimum test pressure prescribed for the specific hazardous material in the applicable packaging section in Subpart F or G of this Part.

(d) *Examination before shipping.* (1) No person may offer for transportation a tank car containing a hazardous material or a residue of a hazardous material unless that person determines that the tank car is in proper condition and safe for transportation. As a minimum, each person offering a tank car for transportation must perform an external visual inspection that includes:

(i) Except where insulation or a thermal protection system precludes an inspection, the tank shell and heads for abrasion, corrosion, cracks, dents, distortions, defects in welds, or any other condition that makes the tank car unsafe for transportation;

(ii) The piping, valves, fittings, and gaskets for corrosion, damage, or any other condition that makes the tank car unsafe for transportation;

(iii) For missing or loose bolts, nuts, or elements that make the tank car unsafe for transportation;

(iv) All closures on tank cars and determine that the closures and all fastenings securing them are properly tightened in place by the use of a bar, wrench, or other suitable tool;

(v) Protective housings for proper securement;

(vi) The pressure relief device, including a careful inspection of the frangible disc in non-closing pressure relief devices, for corrosion or damage that may alter the intended operation of the device;

(vii) Each tell-tale indicator after filling and prior to transportation to ensure the integrity of the rupture disc;

(viii) The external thermal protection system, tank-head puncture resistance system, coupler vertical restraint system, and bottom discontinuity protection for conditions that make the tank car unsafe for transportation.

(ix) The required markings on the tank car for legibility; and

(x) The periodic inspection date markings to ensure that the inspection and test intervals are within the prescribed intervals.

(2) Closures on tank cars are required, in accordance with this subchapter, to be designed and closed so that under conditions normally incident to transportation, including the effects of temperature and vibration, there will be no identifiable release of a hazardous material to the environment. ln any action brought to enforce this section, the lack of securement of any closure to a tool-tight condition, detected at any point, will establish a rebuttable presumption that a proper inspection was not performed by the offeror of the car. That presumption may be rebutted by any evidence indicating that the lack of securement resulted from a specific cause not within the control of the offeror.

(e) *Special requirements for materials poisonous by inhalation*—(1) *Interior heater coils.* Tank cars used for materials poisonous by inhalation may not have interior heater coils.

(2) Tank car specifications. A tank car used for a material poisonous by inhalation must have a tank test pressure of 20.7 Bar (300 psi) or greater, head protection, and a metal jacket (e.g., DOT 105S300W), except that—

(i) A higher test pressure is required if otherwise specified in this subchapter; and

(ii) Other than as provided in paragraph (b)(6) of this section, a tank car which does not conform to the requirements of this paragraph (e)(2), and was authorized for the material poisonous by inhalation under the regulations in effect on June 30, 1996, may continue in use until July 1, 2006.

(f) *Special requirements for hazardous substances.* (1) A tank car used for a hazardous substance listed in paragraph (f)(2) of this section must have a tank test pressure of at least 13.8 Bar (200 psi), head protection and a metal jacket, except that—

(i) No metal jacket is required if—

(A) The tank test pressure is 23.4 Bar (340 psi) or higher; or

(B) The tank shell and heads are manufactured from AAR steel specification TC–128, normalized;

(ii) A higher test pressure is required if otherwise specified in this subchapter; and

(iii) Other than as provided in paragraph (b)(6) of this section, a tank car which does not conform to the requirements of this paragraph (f)(1), and was authorized for a hazardous substance under the regulations in effect on June 30, 1996, may continue in use until July 1, 2006.

(2) *List of hazardous substances.* Hazardous substances for which the provisions of this paragraph (f) apply are as follows:

Aldrin
Allyl chloride
alpha-BHC
beta-BHC
delta-BHC
gamma-BHC
Bis(2-chloroethyl) ether
Bromoform
Carbon tetrachloride
Chlordane
p-Chloroaniline
Chlorobenzene
Chlorobenzilate
p-Chloro-m-cresol
2-Chloroethyl vinyl ether
Chloroform
2-Chloronapthalene
o-Chlorophenol
3-Chloropropionitrile
DDE
DDT
1,2-Dibromo-3-chloropropane
m-Dichlorobenzene
o-Dichlorobenzene
p-Dichlorobenzene
3,3′-Dichlorobenzidine
1,4-Dichloro-2-butene
1,1-Dichloroethane
1,2-Dichloroethane
1,1-Dichloroethylene
Dichloroisopropyl ether
Dichloromethane @
2,4-Dichlorophenol
2,6-Dichlorophenol
1,2-Dichloropropane
1,3-Dichloropropene
Dieldrin
alpha-Endosulfan
beta-Endosulfan
Endrin
Endrin aldehyde
Heptachlor
Heptachlor epoxide
Hexachlorobenzene
Hexachlorobutadiene
Hexachloroethane
Hexachlorophene
Hexachloropropene
Isodrin

Kepone
Methoxychlor
4,4′-Methylenebis(2-chloroaniline)
Methylene bromide
Pentachlorobenzene
Pentachloroethane
Pentachloronitrobenzene (PCNB)
Pentachlorophenol
Polychlorinated biphenyls (PCBs)
Pronamide
Silvex (2,4,5-TP)
2,4,5-T
TDE
1,2,4,5-Tetrachlorobenzene
2,3,7,8-Tetrachlorodibenzo-p-dioxin (TCDD)
Tetrachloroethane
Tetrachloroethylene
2,3,4,6-Tetrachlorophenol
Toxaphene
1,2,4-Trichlorobenzene
1,1,1-Trichloroethane
1,1,2-Trichloroethane
Trichloroethylene
2,4,5-Trichlorophenol
2,4,6-Trichlorophenol
Tris(2,3-dibromopropyl) phosphate

[Amdt. 173–245, 60 FR 49072, Sept. 21, 1995, as amended by Amdt. 173–245, 61 FR 33254, June 26, 1996; Amdt. 173–256, 61 FR 51338, Oct. 1, 1996]

§ 173.32 Qualification, maintenance and use of portable tanks other than Specification IM portable tanks.

(a) Except as otherwise provided in this section, each portable tank used for the transportation of hazardous materials must conform to the requirements of the specification and regulations for the transportation of the particular commodity. Except for Specification 56 and 57 portable tanks, a manufacturer's data report of the portable tank must be procured and retained in the files of the owner during the time that such portable tank is used for such service.

(1) When a portable tank container is used as a cargo tank container, it shall conform to all the requirements prescribed for cargo tank containers. (See § 173.33)

(2) [Reserved]

(3) Each uninsulated portable tank used for the transportation of compressed gases, as defined in § 173.115, must have an exterior surface finish conforming to § 178.245–1(c) of this subchapter.

(4) No portable tank or specification 106A or 110A tank containing a hazardous material may be offered for transportation aboard a passenger vessel unless:

(i) The vessel is operating under a change to its character of vessel certification as defined in § 171.8 of this subchapter; and

(ii) The material is permitted to be transported aboard a passenger vessel in § 172.101 of this subchapter.

(5) Where IM–101 and IM–102 portable tanks are prescribed, Specification 51 portable tanks otherwise conforming to the special commodity requirements of § 172.102(c)(7) of this subchapter may be used.

(6) A DOT 51 portable tank may be used where DOT 56 or DOT 57 type portable tanks or DOT 60 portable tanks are authorized. A DOT 60 portable tank may be used where DOT 56 or DOT 57 type portable tanks are authorized. A higher integrity tank used instead of a specified portable tank must meet the same design profile; e.g., a DOT 51 portable tank must be lined if used instead of a lined DOT 60 portable tank.

(b) Any portable tank container constructed prior to May 15, 1950, complying with the requirements of either the A. S. M. E. Code for Unfired Pressure Vessels, 1946 Edition, or the A. P. I.–A. S. M. E. Code for Unfired Pressure Vessels, 1943 Edition, may be used for the transportation of liquefied compressed gas, provided it fulfills all the requirements of this part and specifications for the particular gas or gases to be transported therein and shall be marked ''ICC Specification 51X'' on the plate required by the specification, except as modified by any or all of the following:

(1) Tanks designed and constructed in accordance with Pars. U–68, U–69, or U–201 of the A. S. M. E. Code may be used. Tanks designed and constructed in accordance with Par. U–68 or U–69 may be re-rated at a working pressure 25 percent in excess of the design pressure for which the tank was originally constructed. If advantage is taken of the increased rating, the re-rated pressure shall be marked on the plate as follows:

Re-rated working pressure—psig

NOTE 1: For purposes of setting safety relief valves, pressure control valves and establishing retest pressure, and for purposes of establishing maximum and minimum design pressures, the re-rated working pressure shall be considered as the equivalent of the design pressure as defined in the specification.

(2) Loading and unloading accessories, valves, piping, fittings, safety and gauging devices, do not have to comply with the requirements for the particular location on the tank.

(3) Specification requirements as to stress-relieving and radiographing are waived.

(c) Any portable tank container of ICC Specification 50[1] fulfilling the requirements of that specification may be continued in service for transportation of a liquefied petroleum gas if it is retested every five years in accordance with the requirements of paragraphs (e)(3) and (4) of this section: *Provided,* That it is in and can be maintained in safe operating condition for the transportation of that gas. In this case the container may retain its original markings.

(d) *Use of Specification 52, 53, 56 and 57 portable tanks.* Continued use of an existing portable tank constructed to DOT Specification 52 or 53 is authorized only for a tank constructed before June 1, 1972. Continued use of an existing portable tank constructed to DOT Specification 56 or 57 is authorized only for a tank constructed before October 1, 1996. A stainless steel portable tank internally lined with polyethylene, which was constructed on or before October 1, 1996, and complies with all requirements of Specification 57 except that it is equipped with a polypropylene discharge ball valve and polypropylene secondary discharge opening closure, may be marked as a Specification 57 portable tank and used in accordance with the provisions of this section.

(e) *Retest.* Each portable tank used for the transportation of a hazardous material must be successfully retested before further use in accordance with the following:

(1) *Schedule.* Each tank must be retested as prescribed in paragraph (e)(2) of this section, in accordance with the following schedule:

(i) Specification 51 (§178.245 of this subchapter): At least once every 5 years.

(ii) Specifications 52, 53, 56 and 57 portable tanks (§§178.251, 178.252, 178.253 of this subchapter): At least once every 2.5 years.

(iii) Specification 60 (§178.255 of this subchapter): At the end of the first 4-year period after the original test; at least once every 2 years thereafter up to a total of 12 years of service; and at least once annually thereafter. Retesting is not required on a rubber-lined tank except before each relining.

(iv) Any other portable tank authorized by this part for transportation of compressed gases (including liquefied compressed gases): At least once every 5 years.

(2) *Test procedures.* Unless otherwise specified, each tank must be retested in accordance with the following test procedures:

(i) *Pressure.* Each Specification 60 tank must be retested in accordance with §178.255–12 of this subchapter. Each Specification 57 tank must be leak tested by a minimum sustained air pressure of at least three pounds per square inch gage applied to the entire tank. Any other tank must be tested by a minimum pressure (air or hydrostatic) of at least 2 pounds per square inch gage or at least one and one-half times the design pressure (maximum allowable working pressure, or re-rated pressure) of the tank, whichever is greater. During each air pressure test, the entire surface of all joints under pressure must be coated with or immersed in a solution of soap and water, heavy oil, or other material suitable for the purpose of detecting leaks. The pressure must be held for a period of time sufficiently long to assure detection of leaks. During the air or hydrostatic test, relief devices may be removed, but all the closure fittings must be in place and the relief device openings plugged. Lagging need not be removed from a lagged tank if it is possible to maintain the required test pressure at constant temperature with

[1] Use of existing portable tanks authorized, but new construction not authorized.

the tank disconnected from the source of pressure.

(ii) *Visual.* While under the test pressure, the tank must be visually inspected for leakage, defective fittings and welds, defective closures, significant dents, and other defects or abnormalities which indicate a potential or actual weakness that could render the tank unsafe for the transportation of a hazardous material.

(iii) *Rejection criteria.* A tank fails to meet the requirements of the pressure test if, during the test, there is permanent distortion of the tank exceeding that permitted by the applicable specification, if there is any leakage, or if any deficiencies described in paragraph (e)(2)(ii) of this section are found. Any tank that fails must be rejected and may not be used again for the transportation of a hazardous material unless the tank is adequately repaired and thereafter a successful test is conducted in accordance with the requirements of this paragraph.

(3) *Marking.* The date of the most recent periodic retest must be marked on the tank, on or near the metal certification plate. Marking must be in accordance with § 178.3 of this subchapter.

(4) *Records.* The owner of the tank or his authorized agent must retain a written record indicating the date and results of all required tests and the name and address of the tester, until the next retest has been satisfactorily completed and recorded.

(5) A portable tank for which the prescribed retest or reinspection under paragraph (e)(1) of this section has become due may not be filled and offered for transportation until the retest or reinspection has been successfully completed. This paragraph does not apply to any tank filled prior to the test due date.

(f) *Special tanks.* Each portable tank authorized by this part including each exemption tank (other than a tank covered by paragraph (e)(1)(iv) of this section) which is not in compliance with one of the specifications listed in paragraph (e) of this section, must be tested in accordance with the procedures prescribed in paragraph (e) of this section for the type of portable tank most nearly equivalent in design and usage. A tank constructed in accordance with paragraph U–68 or U–69 of previous editions of the ASME Code, and which has not been re-rated, must be hydrostatically retested at twice the design pressure instead of the one and one-half times prescribed in paragraph (e)(2)(i) of this section.

(g) *Deteriorated tanks.* Without regard to any other retest requirements, any tank that shows evidence at any time of significant dents, corroded areas, leakage, or other conditions that indicate weakness which could render the tank unsafe for the transportation of a hazardous material, must be retested as prescribed in paragraph (e)(2) of this section.

(h) *Damaged tanks.* Any tank that has been in an accident and that has been damaged to an extent that may adversely affect its product retention capability, must be retested as prescribed in paragraph (e)(2) of this section.

(i) *Unused tanks.* Any tank that has not been used to transport a hazardous material for a period of 1 year or more may not be returned to hazardous materials service until it has been tested successfully in accordance with the requirements of paragraph (e)(2) of this section.

(j) The Department may require the testing under prescribed conditions of any tank when probable cause appears for suspecting that such tank is in unsafe operating condition.

(k) The repair of tanks is authorized, provided such repairs are made under requirements prescribed in the ''Code'' for the original design and construction.

(1) In addition to any other provisions of the specification, no tank shall be repaired, or remodeled, as to cause leakage or cracks or likelihood of leakage or cracks, by areas of stress concentration due to shrinkage of cooling metal in welding operations, sharp fillets, reversal of stresses, or otherwise.

(2) No field welding shall be done except to non-pressure parts.

(l) The bursting strength of any piping and fittings shall be not less than four times the design pressure of the tank, and not less than four times that pressure to which, in any instance, it may be subjected in service, by the action of a pump or other device (not including safety relief valves) the action

of which may be to subject certain portions of the tank piping to pressures greater than the design pressure of the tank.

(1) Pipe joints shall be threaded, welded or flanged. If threaded pipe is used, the pipe and pipe fittings must not be lighter than (Schedule 80) weight. Nonmalleable metals must not be used in the construction of valves or fittings. Where copper tubing is permitted, joints must be brazed or be of equally strong metal union type. The melting point of brazing material may not be lower than 1000°F. The method of joining tubing must not decrease the strength of the tubing such as by the cutting of threads.

(2) Fittings shall be extra heavy. Non-malleable metals shall not be employed in the construction of valves or fittings.

(3) Suitable provision shall be made in every case to allow for expansion, contraction, jarring and vibration of all pipe. Slip joints shall not be used for this purpose.

(4) Piping and fittings shall be grouped in the smallest practicable space and shall be protected from damage as required by the specification.

(5) All piping, valves and fittings on every tank shall be leakage tested with gas or air after installation and proved tight at not less than the design pressure of the tank on which they are used. In the event of replacement, all such piping, valves, or fittings so replaced shall be tested in accordance with the requirements of this section before the tank is returned to transportation service. The requirements of this section shall apply with equal force to all hose used on such tanks, except that such hose may be so tested either before or after installation on the tank.

(m) All materials of construction used in portable tank containers and their appurtenances shall not be subject to destructive attack by the contents of the tank.

(1) All parts of tanks and appurtenances for anhydrous ammonia shall be steel. No copper, silver, zinc, nor their alloys shall be permitted. Brazed joints shall not be permitted.

(2) [Reserved]

(n) Each outlet of portable tanks used for the transportation of liquefied compressed gases, except carbon dioxide, shall be provided with a suitable automatic excess-flow valve. These valves shall be located inside the tank or at a point outside the tank where the line enters or leaves the tank. The valve seat shall be located inside the tank or shall be located within a welded flange or its companion flange, or within a nozzle or within a coupling. The installation shall be made in such a manner as reasonably to assure that any undue strain which causes failure requiring functioning of the valve shall cause failure in such a manner that it will not impair the operation of the valve.

Exception. Safety device connections and liquid level gauging devices which are so constructed that the outward flow of tank contents shall not exceed that passed by a No. 54 drill size opening are not required to be equipped with excess-flow valves.

(1) Excess-flow valves shall close automatically at the rated flows of gas or liquid as specified by the valve manufacturer. The connections or lines on each side of the excess-flow valve, including valves, fittings, etc., shall have a greater capacity than the rated flow of the excess-flow valve.

(2) Excess-flow valves may be designed with a by-pass, not to exceed a No. 60 drill size opening, to allow equalization of pressures.

(3) Filling and discharge lines shall be provided with manually operated shut-off valves located as close to the tank as is practicable. The use of so-called ''Stop-Check'' valves to satisfy with one valve the requirements of this paragraph and of paragraph (n) of this section, is forbidden.

(o) Each tank for carbon dioxide and nitrous oxide shall be lagged with a suitable insulation material of such thickness that the overall thermal conductance is not more than 0.08 Btu per square foot per degree F. differential in temperature per hour. The conductance shall be determined at 60° F. Insulation material used on tanks for nitrous oxide shall be noncombustible.

(p) A refrigerating and/or heating coil or coils may be installed in tanks for carbon dioxide and nitrous oxide. Such coils must be tested externally to at

least the same pressure as the test pressure of the tank. The coils must also be tested internally to at least twice the working pressure of the heating or refrigerating system to be used but in no case less than the test pressure of the tank. Such coils shall be securely anchored. The refrigerant or heating medium to be circulated through the coil or coils must be such as to cause no adverse chemical reaction with the tank or tank contents in case of leakage.

(q) *Maximum Lading Pressure.* Prior to filling and offering a portable tank for transportation, the person must confirm that the portable tank conforms to the specification required for the lading and that the maximum allowable working pressure (MAWP) of the portable tank is greater than or equal to the largest pressure obtained under the following conditions:

(1) For compressed gases and certain refrigerated liquids that are not cryogenic liquids, the pressure prescribed in § 173.315 of this subchapter.

(2) For liquid hazardous materials not covered in paragraph (q)(1) of this section, the sum of the vapor pressure of the lading at 46 °C (115 °F), plus the tank static head exerted by the lading, plus any pressure exerted by the gas padding, including air in the ullage space.

(3) The pressure prescribed in subpart B, D, E, F, G, or H of this part, as applicable.

(4) The maximum pressure used to load or unload the lading.

(r) Unless otherwise specified, where a portable tank is authorized, minimum tank design pressure is 172 kPa (25 psig) for any Packing Group I or Packing Group II liquid lading that meets more than one hazard class definition.

(s) Any DOT specification portable tank manufactured prior to January 1, 1992 that is equipped with a non-reclosable pressure relief device can continue in service for the commodities for which it is authorized. Except for DOT Specification 56 and 57 portable tanks, any DOT specification portable tank manufactured after January 1, 1992 used for materials meeting the definition for Division 6.1 liquids, Packing Group I or II, Class 2 gases, or Class 3 or 4 liquids, must be equipped with a reclosing pressure relief valve having adequately-sized venting capacity.

(t) *Exemption portable tanks based on DOT 51 portable tanks.* (1) The owner of a portable tank constructed in accordance with and used under an exemption issued prior to August 31, 1996, that was in conformance with the requirements for Specification DOT 51 portable tanks with the exception of the location of fill and discharge outlets, shall examine the portable tank and its design to determine if it meets the new outlet requirements contained in § 178.245–1(d) of this subchapter. If the owner determines that the portable tank is in compliance with all the requirements of § 178.245 of this subchapter, the exemption number stenciled on the portable tank shall be removed and the specification plate (or a plate placed adjacent to the specification plate) shall be durably marked ''DOT 51—E*****'' (where ***** is to be replaced by the exemption number).

(2) During the period the portable tank is in service, and for one year thereafter, the owner of the portable tank must retain on file at its principal place of business a copy of the last exemption in effect.

[29 FR 18671, Dec. 29, 1964. Redesignated at 32 FR 5606, Apr. 5, 1967]

EDITORIAL NOTE: For FEDERAL REGISTER citations affecting § 173.32, see the List of CFR Sections Affected appearing in the Finding Aids section of this volume.

§ 173.32a Approval of Specification IM portable tanks.

(a) *Application for approval.* (1) An owner or manufacturer of an IM portable tank (§§ 178.270 through 178.272 of this subchapter) shall apply for approval to any approval agency designated to approve that tank in accordance with the procedures in subpart E, part 107 of this chapter.

(2) Each application for approval must contain the following information:

(i) Three complete copies of all engineering drawings, calculations, and test data necessary to insure that the design complies with the relevant specification.

(ii) The manufacturer's serial number that will be assigned to each portable tank.

(iii) A statement as to whether the design type has been examined by any approval agency previously and judged unacceptable. Affirmative statements must be documented with the name of the approving agency, reason for nonacceptance, and the nature of modifications made to the design type.

(b) *Action by approval agency.* The approval agency shall:

(1) Review the application for approval to determine whether it is complete and conforms with the requirements of paragraph (a) of this section. If an application is incomplete, it will be returned to the applicant and the applicant will be informed in what respects the application is incomplete.

(2) Review all drawings and calculations to ensure that the design is in compliance with all requirements of the relevant specification. If the application is approved, one set of the approved drawings, calculations, and test data shall be returned to the applicant. The second and third (inspector's copy) sets of approved drawings, calculations, and test data shall be retained by the approval agency.

(3) Witness all tests required in §178.270–13 of this subchapter.

(4) Ensure, through appropriate inspection that each IM portable tank is fabricated in all respects in conformance with the approved drawings, calculations, and test data; and

(5) Upon successful completion of all requirements of this subpart, the approval agency shall:

(i) Apply its name, identifying mark or identifying number, and the date upon which the approval was issued, to the metal identification plate required by §178.270–14 of this subchapter.

(ii) Issue an approval certificate for each IM portable tank or, in the case of a series of identical tanks manufactured to a single design, for the series of IM portable tanks. The approval certificate must include all the information required to be displayed on the required metal identification plate.

(c) *Disposition of approval certificates.* A copy of each approval certificate must be retained by the approval agency and by the owner of each IM portable tank.

(d) *Denial of application for approval.* If an approval agency finds that an IM portable tank cannot be approved for any reason, it shall so notify the applicant in writing and shall provide the applicant with the reasons for which the approval is denied. An applicant aggrieved by a decision of an approval agency may appeal the decision in writing within 90 days of receipt to the Associate Administrator for Hazardous Materials Safety.

(e) [Reserved]

(f) *Approval of other existing IM portable tanks.* Portable tanks constructed on or before May 1, 1981, that have not operated under a DOT exemption must be approved in accordance with the provisions of paragraph (b) of this section.

(g) *Modifications to approved portable tanks.* (1) Prior to modification of any approved portable tank which may affect conformance to §178.271 or §178.272 of this subchapter, the owner or manufacturer desiring to make such modification shall inform the approval agency that issued the initial approval of the portable tank (or if unavailable another approval agency) of the nature of the modification and request approval of the modification. The owner or manufacturer shall supply the approval agency with three sets of all revised drawings, calculations, and test data relative to the intended modification.

(2) A statement as to whether the intended modification has been examined by any approval agency previously and judged unacceptable. An affirmative statement must be documented with the name of the approving agency, the reason for nonacceptance, and the nature of changes made to the modification since its original rejection.

(3) The approval agency shall review the request for modification, and if it is determined that the proposed modification is in full compliance with the relevant DOT specification the request shall be approved and the approval agency shall:

(i) Return one set of the approved revised drawings, calculations, and test data to the applicant. The second and

third sets of the approved revised drawings, calculations, and test data shall be retained by the approval agency as required in § 107.404(a)(3) of this chapter.

(ii) Ensure through appropriate inspection, that all modifications conform to the revised drawings, calculations, and test data.

(iii) Determine the extent to which retesting of the modified tank is necessary based on the nature of the proposed modification, and ensure that all required retests are performed in accordance with § 178.270–13 of this subchapter.

(iv) If modification to an approved tank alters any information on the approval certificate, issue a new approval certificate for the modified tank and ensure that any necessary changes are made to the metal identification plate. A copy of each newly issued approval certificate shall be retained by the approval agency and by the owner of each portable tank.

(4) If it determined that the proposed modification is not in compliance with the relevant DOT specification, the request shall be denied. The procedures of paragraph (d) of this section apply to such denial.

(h) *Termination of Approval Certificate.* (1) The Associate Administrator for Hazardous Materials Safety may terminate an approval issued under this section if he determines that:

(i) Information upon which the approval was based is fraudulent or substantially erroneous; or

(ii) Termination of the approval is necessary to adequately protect against risks to life and property.

(iii) The approval was not issued by the approval agency in good faith.

(2) Before an approval is withdrawn, the Associate Administrator for Hazardous Materials Safety gives the owner or manufacturer and the approval agency:

(i) Written notice of the facts or conduct believed to warrant the withdrawal;

(ii) Opportunity to submit oral and written evidence, and

(iii) Opportunity to demonstrate or achieve compliance with the application requirement.

(3) If the Associate Administrator for Hazardous Materials Safety determines that a certificate of approval must be withdrawn to preclude a significant and imminent adverse affect on public safety, he shall withdraw the certificate of approval issued by a designated approval agency. In such circumstances, the procedures of paragraphs (h)(2) (ii) and (iii) of this section need not be provided prior to withdrawal of the approval, but shall be provided as soon as practicable thereafter.

[Amdt. 173–144, 46 FR 9890, Jan. 29, 1981, as amended by Amdt. 173–185, 50 FR 11052, Mar. 19, 1985; Amdt. 173–224, 56 FR 66279, Dec. 20, 1991; Amdt. 173–253, 61 FR 27174, May 30, 1996]

§ 173.32b Periodic testing and inspection of Specification IM portable tanks.

(a) *Periodic testing*—(1) *Hydrostatic test.* Each Specification IM portable tank (§§ 178.270, 178.271 and 178.272 of this subchapter) and all piping, valves and accessories, except pressure-relief devices, shall be hydrostatically tested with water, or other liquid of similar density and viscosity, to a pressure not less than 150 percent of its maximum allowable working pressure. Testing shall be at intervals of not more than five years. While under pressure the tank shall be inspected, for leakage, distortion, or any other condition which might render the tank unsafe for service. The hydrostatic test shall be witnessed by an approval agency. Any damage or deficiency which might render the portable tank unsafe for service shall be repaired to the satisfaction of the witnessing approval agency and the tank hydrostatically retested. Upon successful completion of the hydrostatic test, the witnessing approval agency shall apply its name, identifying mark or identifying number and the date of the test on the tank as described in paragraph (d) of this section.

(2) *Pressure relief valves.* Spring loaded pressure relief valves must be removed from the tank and tested at intervals of not more than two and one-half years.

(b) *Visual inspection.* Each portable tank and all piping, valves and accessories shall be visually inspected at intervals not exceeding two and one-half years. The inspection shall be conducted by an owner or his agent or by an approval agency, except that it must be conducted by an approval agency coincident with each hydrostatic test required by paragraph (a) of this section. In the case of insulated tanks, insulation need not be removed if, in the opinion of the person performing the visual inspection, external corrosion is likely to be negligible. If evidence of any unsafe condition is discovered, the portable tank may not be returned to service until such condition has been corrected to the satisfaction of the person performing the inspection. The inspection shall include the following:

(1) The tank shall be carefully inspected internally for corroded areas, dents, distortions, defects in welds, and other conditions that might render the tank unsafe for service;

(2) The piping, valves, and gaskets shall be carefully inspected for corroded areas, defects in welds, and other conditions, including leakage, that might render the tank unsafe for service;

(3) Devices for tightening manhole covers must be operative and there must be no leakage at manhole covers or gaskets.

(4) Missing or loose bolts or nuts on any flanged connection or blank flange must be replaced or tightened.

(5) All emergency devices and valves must be free from corrosion, distortion and any damage or defect that could prevent their normal operation.

(6) Required markings on the tank must be legible.

(7) Upon successful completion of the visual reinspection, the inspector shall mark the date of the visual reinspection on the tank as described in paragraph (d) of this section.

(c) *International shipments.* A portable tank that meets the definition of ''container'' in §450.3(a)(3) of this title may not be offered for international transport unless the frame work, tank supports and lifting attachments fully comply with all applicable requirements of parts 450—453 of this title.

(d) *Test date marking.* The month and year of the last hydrostatic test, the identification markings of the approval agency witnessing the test, and the date of the last visual inspection must be durably and legibly marked on or near the metal identification plate in letters not less than 3 mm (0.118 inches) high when on the metal identification plate and 32 mm (1.25 inches) high when on the tank.

(e) *Damaged or deteriorated portable tanks.* Without regard to any other test requirement, any tank that shows evidence at any time of damaged or corroded areas, leakage, or other deterioration that indicates a weakness that could render the tank unsafe for service, must be inspected and tested in accordance with the requirements of paragraphs (a) and (b) of this section prior to reuse. Pressure relief devices need not be tested or replaced unless there is reason to believe the relief devices have been affected by the damage or deterioration.

(f) *Record retention.* The owner of each portable tank or his authorized agent shall retain a written record of the date and results of all required tests, (including visual inspections), and the name and address of the person performing the test, until the next retest has been satisfactorily completed and recorded.

[Amdt. 173–144, 46 FR 9891, Jan. 29, 1981]

§173.32c Use of Specification IM portable tanks.

(a) No person may offer a hazardous material for transportation in an IM portable tank except as authorized by this subchapter.

(b) Except as otherwise provided in this subpart, an IM portable tank may not be used for the transportation of a hazardous material unless it meets the requirements of this subchapter.

(c) An IM portable tank for which the prescribed periodic retest or reinspection under §173.32b of this subchapter has become due may not be filled and offered for shipment until the retest or reinspection has been successfully completed. This paragraph does not apply to any tank filled prior to the test due date.

(d) Prior to filling, each IM portable tank shall be given a complete external

inspection. Any unsafe condition must be corrected prior to its use. The external inspection shall include:

(1) A visual inspection of:

(i) The shell, piping, valves and other appurtenances for corroded areas, dents, defects in welds and other defects such as missing, damaged, or leaking gaskets;

(ii) All flanged connections or blank flanges for missing or loose nuts and bolts;

(iii) All emergency devices for corrosion, distortion, or any damage or defect that could prevent their normal operation; and

(iv) All required markings on the tank for legibility.

(2) An inspection to determine that any device for tightening manhole covers is operative and adequate to prevent leakage at the manhole cover.

(e) A hazardous material may not be loaded in an IM portable tank if the part of the tank or any of its appurtenances having contact with the material during transportation would be subject to destructive attack by or a dangerous reaction with the material.

(f) A hazardous material may not be loaded in an IM portable tank unless it has pressure relief devices providing total relieving capacity meeting the requirements of § 178.270-11(d) of this subchapter.

(g) A hazardous material may not be loaded in an IM portable tank with filling or discharge connections located below the normal liquid level of the tank unless:

(1) Each filling or discharge connection located below the normal liquid level of the tank has at least two serially-mounted closures consisting of an internal discharge valve and a bolted blank flange or other suitable, liquid-tight closure on each filling or discharge connection; or

(2) When this paragraph (g)(2) is specified for a hazardous material through § 172.102(c)(7) of this subchapter, each filling or discharge connection located below the normal liquid level of the tank, or compartment thereof, has three serially-mounted closures consisting of an internal discharge valve capable of being closed from a location remote from the valve itself, an external valve, and a bolted blank flange or other suitable, liquid-tight closure on the outlet side of the external valve.

(h) Except during a hydrostatic test, an IM portable tank may not be subjected to a pressure greater than its maximum allowable working pressure.

(i) An IM portable tank may not be loaded to a gross weight greater than the maximum allowable gross weight specified on its identification plate.

(j) An IM portable tank or compartment thereof having a volume greater than 7,500 L may not be loaded to a filling density less than 80 percent by volume.

(k) The outage for an IM portable tank may not be less than 2 percent at a temperature of 122°F (50°C).

(l) Each tell-tale indicator for the space between a frangible disc and a safety relief valve mounted in series must be checked after the tank is filled and prior to transportation to ensure that the frangible disc is leak free. Any leakage through the frangible disc must be corrected prior to offering the tank for transportation. The tell-tale device must be designed to prevent the loss of any hazardous material through the device itself while the tank is in transportation.

(m) An IM portable tank containing a hazardous material may not be loaded on a highway or rail transport vehicle unless loaded entirely within the horizontal outline thereof, without overhang or projection of any part of the tank assembly.

(n) Specifications IM 101 and IM 102 portable tanks used for the transportation of flammable liquids via rail may not be fitted with nonreclosing pressure relief devices except in series with spring loaded pressure relief valves.

(o) An IM 101 tank may be used whenever an IM 102 tank is authorized provided it meets the requirements for pressure relief devices, bottom outlets and any other special provisions specified for the IM 102 tank in § 172.102 of this subchapter.

(p) Any IM 101 or IM 102 portable tank certified by an approval agency prior to January 1, 1992, that is equipped with a non-reclosable pressure relief device may continue in service for the commodities for which it is

authorized. Any IM 101 and IM 102 portable tank certified after January 1, 1992, used for materials meeting the definition for Division 6.1 liquids, Packing Group I or II, or Class 3 or 4 liquids, must be equipped with a reclosing pressure relief valve having adequately-sized venting capacity.

(q) If the hazardous material being transported is in a molten state, the tank must be thermally insulated by completely covering it with at least 100 mm (3.94 inches) of cork or other suitable insulation material of sufficient thickness that the overall thermal conductance is not more than 0.080 Btu per hour per square foot per degree Fahrenheit differential.

(r) Hazardous materials authorized for transport in a tank fitted with bottom outlets having two serially mounted closures are also authorized for transport in a tank fitted with three serially mounted closures and in tanks fitted with no bottom outlets. Similarly, hazardous materials authorized for transport in tanks fitted with bottom outlets having three serially mounted closures are also authorized for transport in tanks fitted with no bottom outlets.

[Amdt. 173–144, 46 FR 9892, Jan. 29, 1981, as amended by Amdt. 173–224, 55 FR 52616 Dec. 21, 1990; 56 FR 66266, Dec. 20, 1991; 57 FR 45460, 45461, Oct. 1, 1992; Amdt. 173–261, 62 FR 24719, May 6, 1997]

§173.33 Hazardous materials in cargo tank motor vehicles.

(a) *General requirements.* (1) No person may offer or accept a hazardous material for transportation in a cargo tank motor vehicle except as authorized by this subchapter.

(2) Two or more materials may not be loaded or accepted for transportation in the same cargo tank motor vehicle if, as a result of any mixture of the materials, an unsafe condition would occur, such as an explosion, fire, excessive increase in pressure or heat, or the release of toxic vapors.

(3) No person may fill and offer for transportation a specification cargo tank motor vehicle for which the prescribed periodic retest or reinspection under subpart E of part 180 of this subchapter is past due until the retest or inspection has been successfully completed. This requirement does not apply to a cargo tank supplied by a motor carrier who is other than the person offering the hazardous material for transportation (see §177.824 of this subchapter), or to any cargo tank filled prior to the retest or inspection due date.

(b) *Loading requirements.* (1) A hazardous material may not be loaded in a cargo tank if during transportation any part of the tank in contact with the hazardous material lading would have a dangerous reaction with the hazardous material.

(2) A cargo tank may not be loaded with a hazardous material that will have an adverse effect on the tank's integrity or—

(i) May combine chemically with any residue or contaminants in the tank to produce an explosion, fire, excessive increase in pressure, release of toxic vapors or other unsafe condition.

(ii)—(iii) [Reserved]

(iv) May severely corrode or react with the tank material at any concentration and temperature that will exist during transportation.

(v) Is prohibited by §173.21 or §173.24 of this subchapter.

(3) Air pressure in excess of ambient atmospheric pressure may not be used to load or unload any lading which may create an air-enriched mixture within the flammability range of the lading in the vapor space of the tank.

(4) To prevent cargo tank rupture in a loading or unloading accident, the loading or unloading rate used must be less than or equal to that indicated on the cargo tank specification plate, except as specified in §173.318(b)(6). If no loading or unloading rate is marked on the specification plate, the loading or unloading rate and pressure used must be limited such that the pressure in the tank may not exceed 130% of the MAWP.

(c) *Maximum Lading Pressure.* (1) Prior to loading and offering a cargo tank motor vehicle for transportation with material that requires the use of a specification cargo tank, the person must confirm that the cargo tank motor vehicle conforms to the specification required for the lading and that the MAWP of the cargo tank is greater than or equal to the largest

pressure obtained under the following conditions:

(i) For compressed gases and certain refrigerated liquids that are not cryogenic liquids, the pressure prescribed in § 173.315 of this subchapter.

(ii) For cryogenic liquids, the pressure prescribed in § 173.318 of this subchapter.

(iii) For liquid hazardous materials loaded in DOT specification cargo tanks equipped with a 1 psig normal vent, the sum of the tank static head plus 1 psig. In addition, for hazardous materials loaded in these cargo tanks, the vapor pressure of the lading at 115 °F. must be not greater than 1 psig, except for gasoline transported in accordance with Special Provision B33 in § 172.102(c)(3) of this subchapter.

(iv) For liquid hazardous materials not covered in paragraph (c)(1)(i), (ii), or (iii) of this section, the sum of the vapor pressure of the lading at 115 °F, plus the tank static head exerted by the lading, plus any pressure exerted by the gas padding, including air in the ullage space or dome.

(v) The pressure prescribed in subpart B, D, E, F, G, or H of this part, as applicable.

(vi) The maximum pressure in the tank during loading or unloading.

(2) Any Specification MC 300, MC 301, MC 302, MC 303, MC 305, MC 306 or MC 312, cargo tank motor vehicle with no marked design pressure or marked with a design pressure of 3 psig or less may be used for an authorized lading where the pressure derived from § 173.33(c)(1) is less than or equal to 3 psig. After December 31, 1990, a cargo tank may not be loaded and offered for transportation unless marked or remarked with an MAWP or design pressure in accordance with 49 CFR 180.405(k).

(3) Any Specification MC 310 or MC 311 cargo tank motor vehicle may be used for an authorized lading where the pressure derived from § 173.33(c)(1) is less than or equal to the MAWP or MWP, respectively, as marked on the specification plate.

(4) Any cargo tank marked or certified before August 31, 1995, marked with a design pressure rather than an MAWP may be used for an authorized lading where the largest pressure derived from § 173.33(c)(1) is less than or equal to the design pressure marked on the cargo tank.

(5) Any material that meets the definition of a Division 6.1, Packing Group I or II (poisonous liquid) material must be loaded in a cargo tank motor vehicle having a MAWP of 25 psig or greater.

(d) *Relief system.* (1) Non-reclosing pressure relief devices are not authorized in any cargo tank except when in series with a reclosing pressure relief device. However, a cargo tank marked or certified before August 31, 1995 which is fitted with non-reclosing pressure relief devices may continue to be used in any hazardous material service for which it is authorized. The requirements in this paragraph do not apply to MC 330, MC 331 and MC 338 cargo tanks.

(2) Each cargo tank motor vehicle used to transport a liquid hazardous material with a gas pad must have a pressure relief system that provides the venting capacity prescribed in § 178.345–10(e) of this subchapter. The requirements in this paragraph do not apply to MC 330, MC 331 and MC 338 cargo tanks.

(3) A cargo tank motor vehicle made to a specification listed in column 1 may have pressure relief devices or outlets conforming to the applicable specification to which the tank was constructed, or the pressure relief devices or outlets may be modified to meet the applicable requirement for the specification listed in column 2 without changing the markings on the tank specification plate. The venting capacity requirements of the original DOT cargo tank specification must be met whenever a pressure relief valve is modified.

Column 1	Column 2
MC 300, MC 301, MC 302, MC 303, MC 305.	MC 306 or DOT 406.
MC 306	DOT 406.
MC 304	MC 307 or DOT 407.
MC 307	DOT 407.
MC 310, MC 311	MC 312 or DOT 412.
MC 312	DOT 412.
MC 330	MC 331.

(e) *Retention of hazardous materials in product piping during transportation.* DOT specification cargo tanks used for the transportation of any material that is a Division 6.1 (poisonous liquid)

material, oxidizer liquid, liquid organic peroxide or corrosive liquid (corrosive to skin only) may not be transported with hazardous materials lading retained in the piping, unless the cargo tank motor vehicle is equipped with bottom damage protection devices meeting the requirements of §178.337–10 or §178.345–8(b) of this subchapter, or the accident damage protection requirements of the specification under which it was manufactured. This requirement does not apply to a residue which remains after the piping is drained. A sacrificial device (see §178.345–1 of this subchapter) may not be used to satisfy the accident damage protection requirements of this paragraph.

(f) An MC 331 type cargo tank may be used where MC 306, MC 307, MC 312, DOT 406, DOT 407 or DOT 412 type cargo tanks are authorized. An MC 307, MC 312, DOT 407 or DOT 412 type cargo tank may be used where MC 306 or DOT 406 type cargo tanks are authorized. A higher integrity tank used instead of a specified tank must meet the same design profile (for example, an MC 331 cargo tank must be lined if used in place of a lined MC 312 cargo tank.)

(g) Unless otherwise specified, where MC 307, MC 312, DOT 407 or DOT 412 cargo tanks are authorized, minimum tank design pressure is 172.4 kPa (25 psig) for any Packing Group I or Packing Group II liquid lading that meets more than one hazard class definition.

(h) Each liquid or vapor discharge opening in an MC 330 or MC 331 cargo tank and each liquid filling and liquid discharge line in an MC 338 cargo tank must be provided with a remotely controlled internal self-closing stop valve, except when an MC 330 or MC 331 cargo tank is marked and used exclusively to transport carbon dioxide, or except when an MC 338 is used to transport argon, carbon dioxide, helium, krypton, neon, nitrogen, and xenon. However, if the cargo tank motor vehicle was certified before January 1, 1995, this requirement is applicable only when an MC 330 or MC 331 cargo tank is used to transport a flammable liquid, flammable gas, hydrogen chloride (refrigerated liquid), or anhydrous ammonia; or when an MC 338 cargo tank is used to transport flammable ladings.

[Amdt. 173–212, 54 FR 25005, June 12, 1989, as amended at 55 FR 37048, Sept. 7, 1990; Amdt. 173–224, 55 FR 52616 Dec. 21, 1990; Amdt. 173–212, 56 FR 27875, June 17, 1991; 57 FR 45461, Oct. 1, 1992; Amdt. 173–212, 58 FR 12905, Mar. 8, 1993; Amdt. 173–212, 59 FR 1786, Jan. 12, 1994; Amdt. 173–138, 59 FR 49133, Sept. 26, 1994; Amdt. 173–240, 59 FR 55172, Nov. 3, 1994; Amdt. 173–241, 59 FR 67492, Dec. 29, 1994]

§173.34 Qualification, maintenance and use of cylinders.

(a) *General qualification for use of cylinders.* (See §§173.1 through 173.30 for requirements applying to all shipments.)

(1) No person may charge or fill a cylinder unless it is as specified in this part and part 178 of this subchapter. A cylinder that leaks, is bulged, has defective valves or safety devices, bears evidence of physical abuse, fire or heat damage, or detrimental rusting or corrosion, must not be used unless it is properly repaired and requalified as prescribed in these regulations.

(2) When cylinders with a marked pressure limit are prescribed, other cylinders made under the same specification but with a higher marked service pressure limit are authorized. For example, cylinders marked DOT–4B500 may be used where DOT–4B300 is specified.

(b) *Grandfather clause.* A cylinder in domestic use previous to the date upon which the specification therefor was first made effective in these regulations may be used if the cylinder has been properly tested and otherwise complies with the requirements applicable for the gas with which it is charged.

(c) *Cylinder marking.* Each required marking on a cylinder must be maintained so that it is legible. Retest markings and original markings which are becoming illegible may be reproduced by stamping on a metal plate which must be permanently secured to the cylinder.

(1) Additional information not affecting the markings prescribed in the applicable cylinder specification may be placed on the cylinder. No indentation may be made in the sidewall of the cylinder unless specifically permitted in the applicable specification.

(2) When the space originally provided for dates of subsequent retests becomes filled, the stamping of additional test dates into the external surface of the footring of a cylinder is authorized.

(3) Except for marked service pressure, markings required on cylinders may not be altered or removed. The marked service pressure may be changed only upon application to the Associate Administrator for Hazardous Materials Safety and receipt of written instructions as to the procedure to be followed. A service pressure change is not authorized for a cylinder which fails to pass the prescribed periodic hydrostatic retest, unless it is reheat treated and requalified in accordance with this section.

(d) *Pressure relief device systems.* No person may offer a cylinder charged with a compressed gas for transportation in commerce unless the cylinder is equipped with one or more pressure relief devices sized and selected as to type, location, and quantity and tested in accordance with CGA Pamphlet S–1.1 (compliance with paragraph 9.1.1.1 of CGA Pamphlet S–1.1 is not required). The pressure relief device system must be capable of preventing rupture of the normally charged cylinder when subjected to a fire test conducted in accordance with CGA Pamphlet C–14, or in the case of an acetylene cylinder, CGA Pamphlet C–12. Cylinders shall not be shipped with leaking safety relief devices. Safety relief devices must be tested for leaks before the charged cylinder is shipped from the cylinder filling plant; it is expressly forbidden to repair leaking fuse plug devices, where leak is through the fusible metal or between the fusible metal and the opening in the plug body, (except by removal of the device and replacement of the fusible metal.) Exceptions are as follows:

(1) Except as provided in paragraphs (d)(1) (i) through (iii) of this section, a pressure relief device is not required on a cylinder 12 inches or less in length, exclusive of neck, and 4½ inches or less in outside diameter.

(i) A pressure relief device is required on a specification 9, 39 (§ 178.65 of this subchapter), 40, or 41 cylinder. A metal pressure relief valve is required on a specification 39 cylinder used for a liquefied flammable gas. A fusible pressure relief device is not authorized on a specification 39 cylinder containing a liquefied compressed gas.

(ii) A pressure relief device is required on a cylinder charged with a liquefied gas for which this part requires a service pressure of 1800 psi or higher.

(iii) A pressure relief device is required on a cylinder charged with a nonliquefied gas to a pressure of 1,800 psi or higher at 70 °F.

(2) Except for a specification 39 cylinder and a cylinder used for acetylene in solution, a pressure relief device is not required on a cylinder charged with a nonliquefied gas under pressure of 300 psi or less at 70 °F.

(3) A pressure relief device is prohibited on a cylinder charged with a Division 2.3 or Division 6.1 material in Hazard Zone A.

(4) A pressure relief device is prohibited on a cylinder charged with fluorine.

(5) A pressure relief device is not required on a cylinder charged with methyl mercaptan; with mono-, di-, or trimethylamine, anhydrous; with not over 10 pounds of nitrosyl chloride; or with less than 165 pounds of anhydrous ammonia.

(6) Pressure relief devices, if used, must be in the vapor space of cylinders containing pyroforic liquids, inorganic or organic, n.o.s., covered by § 173.124.

(e) *Periodic qualification and marking of cylinders.* Each cylinder that becomes due for periodic retest as specified in the following table must be retested and marked in conformance with the requirements of this paragraph (e):

RETEST AND INSPECTION OF CYLINDERS [1]

Specification under which cylinder was made [2]	Minimum retest pressure (p.s.i.) [3]	Retest period (years)
DOT–3	3,000 p.s.i	5.
DOT–3A, 3AA	5/3 times service pressure, except non-corrosive service (see § 173.34(e)(13))	5, 10, or 12 (see § 173.34 (e)(14), (e)(12), (e)(16), and (e)(19)).
DOT–3AL	5/3 times service pressure	5 or 12 (see (e)(19)).
DOT–3AX, 3AAX	5/3 times service pressure	5.
3B, 3BN	2 times service pressure (see § 173.34(e)(13))	5 or 10 (see § 173.34(e)(12)).
3C	Retest not required.	
3D	5/3 times service pressure	5.
3E	Retest not required.	
3HT	5/3 times service pressure	3 (see § 173.34(e)(15)).
3T	5/3 times service pressure	5.
4	700 p.s.i	10.
4A	5/3 times service pressure (see § 173.34(e)(13))	5 or 10 (see § 173.34(e)(12)).
4AA480	2 times service pressure (see § 173.34(e)(13))	5 or 10 (see § 173.34(e)(14)).
4B, 4BA, 4BW, 4B–240ET	2 times service pressure, except non-corrosive service (see § 173.34(e)(13))	5, 10 or 12 (see § 173.34 (e)(11), (e)(12) and (e)(19)).
4C	Retest not required.	
4D, 4DA, 4DS	2 times service pressure	5.
DOT–4E	2 times service pressure, except non-corrosive service (see § 173.34(e)(13))	5.
4L	Retest not required.	
8, 8AL		10 or 20 (see § 173.34(e)(18)).
DOT–9	400 p.s.i. (maximum 600 p.s.i.)	5.
25	500 p.s.i	5.
26 for filling at over 450 p.s.i	5/3 times service pressure	5.
26 for filling at 450 p.s.i. and below	2 times service pressure, except non-corrosive service (see § 173.34(e)(13))	5 or 10 (see § 173.34(e)(11)).
33	800 p.s.i	5.
38	500 p.s.i	5.
Exemption cylinder	See current exemption	See current exemption.
Foreign cylinder (see § 173.301(j) for restrictions on use).	As marked on the cylinder, but not less than 5/3 of any service or working pressure marking	5.

[1] Any cylinder not exceeding two inches outside diameter and less than two feet in length is excepted from hydrostatic retest.
[2] A cylinder in chlorine or sulfur dioxide service made before April 20, 1915, must be retested at 500 psi.
[3] For cylinders not marked with a service pressure, see § 173.301(e)(1).

(1) *General requirements.* (i) Each cylinder bearing a DOT specification marking (including a cylinder remarked in conformance with § 173.23) must be inspected, retested and marked in conformance with this section, at the frequency specified in the Retest and Inspection of Cylinders Table in this paragraph (e). Each cylinder bearing a DOT exemption number must be inspected, retested and marked in conformance with this section and the terms of the applicable exemption, at the frequency specified in the exemption.

(ii) No cylinder required to be retested by paragraph (e)(1)(i) of this section may be charged or filled with a hazardous material and transported in commerce unless that cylinder has been inspected and retested in accordance with this section and the retester has marked the cylinder by stamping the date of retest, the cylinder retester identification number unless excepted under this section, and any other marking required by this section. No person may mark a test date or a retester identification number on a DOT specification or exemption cylinder unless all applicable requirements of this section have been met.

(2) *Retester authorization.* (i) No person may mark a cylinder with a test date or retester identification number, or otherwise represent that a DOT specification or exemption cylinder has been retested under this section, unless that person holds a current retester identification number issued by the Associate Administrator for Hazardous Material Safety and operates in compliance with the terms of the retester identification number issuance letter. With the exception of visual inspections, all functions under this section must be performed or supervised by an individual named as qualified in the retester identification number application or a notification pursuant to paragraph (e)(2)(iv) of this section. A person is not required to obtain a retester identification number, if the person only performs visual inspections on DOT specification or exemption cylinders.

(ii) Any person seeking approval as a cylinder retester shall arrange for an independent inspection agency, approved by the Associate Administrator for Hazardous Material Safety pursuant to § 173.300a, to inspect its retest facility. The person seeking approval shall bear the cost of the inspection. Independent inspection agencies are not RSPA agents or representatives. A list of approved independent inspection agencies is available from the Associate Administrator for Hazardous Materials Safety, Office of Hazardous Materials Exemptions and Approvals (DHM–32), Research and Special Programs Administration, U.S. Department of Transportation, Washington, DC 20590–0001. Assistance in obtaining an approval may be requested from the same address.

(A) After the inspection, the person seeking approval must submit a letter of recommendation and inspection report from the independent inspection agency and a completed request for approval to the Associate Administrator for Hazardous Materials Safety at the address listed in this paragraph (e)(2)(ii). An applicant must include the following information: company name; facility location; mailing address (if different from location of facility); business telephone number; name of facility manager; the DOT specification/exemption cylinders that will be tested at the facility; a certification that the facility will operate in compliance with the applicable requirements of this subchapter, the date and an authorized signature.

(B) The Associate Administrator for Hazardous Materials Safety reviews the application, the inspection report and recommendation submitted by the independent inspection agency, and other available information. The Associate Administrator for Hazardous Materials Safety issues a retester identification number upon a finding that the applicant's facility and qualifications are adequate to properly inspect, test and mark cylinders under this section. Unless otherwise provided in the retester identification number issuance letter, a retester identification number expires five years from the date of issuance.

(iii) An approved retester shall apply for retester identification number renewal in a timely manner. A new inspection report and recommendation of

an independent inspection agency are required for each renewal. If the Associate Administrator for Hazardous Materials Safety receives a renewal application with the accompanying inspection report and recommendation at least 50 days before expiration of the retester identification number, the retester identification number remains in effect until the Associate Administrator for Hazardous Materials Safety issues a renewal or notifies the retester that its request for renewal of the retester identification number is denied. The Associate Administrator for Hazardous Materials Safety considers renewal of a retester identification number in accordance with the standard in paragraph (e)(2)(ii)(B) of this section.

(iv) The retester identification number holder shall report in writing any change in its name, address, ownership, testing equipment, or management or personnel performing any function under this section, to the Associate Administrator for Hazardous Materials Safety (DHM–32) within 20 days of the change. A retester identification number remains valid only if the retester's facility and qualifications are maintained at or above the level observed at the time of inspection by the independent inspection agency.

(v) A retester shall maintain, at each location at which it inspects, retests or marks cylinders under this section:

(A) Current copies of those portions of this subchapter that apply to its cylinder inspection, retesting and marking activities at that location.

(B) Current copies of all exemptions governing exemption cylinders inspected, retested or marked by the retester at that location.

(C) Copies of each CGA pamphlet incorporated by reference in §171.7 of this subchapter that applies to the retester's cylinder inspection, retesting and marking activities at that location. The publication maintained must be the edition incorporated by reference in §171.7 of this subchapter.

(3) *Visual inspection.* Except as otherwise provided in this section, each time a cylinder is retested, it must be visually inspected, internally and externally, in accordance with CGA Pamphlets C–6, C–6.1, C–6.2, or C–6.3, as applicable. The cylinder must be approved, rejected or condemned according to the criteria in the applicable CGA pamphlet. Internal inspection may be omitted for cylinders of the type and in the service described under paragraph (e)(13) of this section. DOT 3BN cylinders must be inspected in accordance with CGA Pamphlet C–6.

(4) *Pressure retest.* (i) Unless otherwise provided, each cylinder required to be retested under this section must be retested by means suitable for measuring the expansion of the cylinder under pressure. Bands and other removable attachments must be loosened or removed before testing so that the cylinder is free to expand in all directions.

(ii) The pressure-indicating device of the testing apparatus must permit reading of pressures to within 1% of the minimum prescribed test pressure of each cylinder tested, except that for an analog device, interpolation to ½ of the marked gauge divisions is acceptable. The expansion-indicating device of the testing apparatus must also permit incremental reading of the cylinder expansion to 1% of the total expansion of each cylinder tested or 0.1 cubic centimeter, whichever is larger. Midpoint visual interpolation is permitted.

(iii) Each day before retesting, the retester shall confirm, by using a calibrated cylinder or other method authorized in writing by the Associate Administrator for Hazardous Materials Safety that:

(A) The pressure-indicating device, as part of the retest apparatus, is accurate within ±1.0% of the prescribed test pressure of any cylinder tested that day. The pressure indicating device, itself, must be certified as having an accuracy of ±0.5%, or better, of its full range, and must permit readings of pressure from 90%–110% of the minimum prescribed test pressure of the cylinder to be tested. The accuracy of the pressure indicating device within the test system can be demonstrated at any point within 500 psi of the actual test pressure for test pressures at or above 3000 psi, or 10% of the actual test pressure for test pressures below 3000 psi; and

(B) The expansion-indicating device, as part of the retest apparatus, gives a

stable reading of expansion and is accurate to ±1.0% of the total expansion of any cylinder tested or 0.1 cubic centimeter, whichever is larger. The expansion-indicating device itself must have an accuracy of ±0.5%, or better, of its full scale.

(iv) The test equipment must be verified to be accurate within ±1.0% of the calibrated cylinder's pressure and corresponding expansion values. This may be accomplished by bringing the pressure to a value shown on the calibration certificate for the calibrated cylinder used and verifying that the resulting total expansion is within ±1.0% of the total expansion shown on the calibration certificate. Alternatively, calibration may be demonstrated by bringing the total expansion to a known value on the calibration certificate for the calibrated cylinder used and verifying that the resulting pressure is within ±1.0% of the pressure shown on the calibration certificate. The calibrated cylinder must show no permanent expansion. The retester shall demonstrate calibration in conformance with this paragraph (e)(4) to an authorized inspector on any day that it retests cylinders. A retester shall maintain calibrated cylinder certificates in conformance with paragraph (e)(8)(iii) of this section.

(v) Minimum test pressure must be maintained for at least 30 seconds, and as long as necessary for complete expansion of the cylinder. A system check may be performed at or below 90% of test pressure prior to the retest. In the case of a malfunction of the test equipment, the test may be repeated at a pressure increased by 10 percent or 100 psi, whichever is less. This paragraph (e)(4) does not authorize retest of a cylinder otherwise required to be condemned under paragraph (e)(6) of this section.

(5) *Cylinder rejection.* (i) A retester shall reject a cylinder when on visual inspection, it meets a rejection standard in CGA Pamphlets C–6, C–6.1, C–6.2, or C–6.3, as applicable.

(ii) Except as provided in paragraph (e)(5)(iv) of this section, a cylinder that is rejected may not be marked as meeting the requirements of this section.

(iii) When a cylinder is rejected, the retester shall notify the cylinder owner, in writing, that the cylinder has been rejected and, unless requalified as provided in paragraph (e)(5)(iv) of this section, may not be filled with a hazardous material for transportation in commerce where use of a specification packaging is required.

(iv) A rejected cylinder with a service pressure of less than 900 psig may be requalified and marked if the cylinder is repaired or rebuilt and subsequently reinspected and retested in conformance with—

(A) CGA Pamphlets C–6, C–6.1, C–6.2, or C–6.3, as applicable;

(B) Parts 173 and 178 of this subchapter;

(C) Any exemption specific to that cylinder; and

(D) Any approval required under paragraphs (i) and (l) of this section.

(6) *Cylinder condemnation.* (i) A cylinder must be condemned when—

(A) On inspection, it meets a condition for condemnation in CGA Pamphlets C–6, C–6.1, C–6.2, or C–6.3, as applicable;

(B) The cylinder leaks through its wall;

(C) Evidence of cracking exists to the extent that the cylinder is likely to be weakened appreciably;

(D) For a DOT specification cylinder other than a DOT 4E aluminum cylinder, permanent expansion exceeds 10 percent of total expansion;

(E) For a DOT 4E aluminum cylinder, permanent expansion exceeds 12 percent of total expansion;

(F) For a DOT exemption cylinder, permanent expansion exceeds the limit in the applicable exemption, or the cylinder meets another criterion for condemnation in the applicable exemption; or

(G) For a DOT specification 3HT cylinder, elastic expansion exceeds the marked rejection elastic expansion.

(ii) When a cylinder is required to be condemned, the retester shall stamp a series of X's over the DOT specification number and the marked service pressure or stamp ''CONDEMNED'' on the shoulder, top head, or neck using a steel stamp. Alternatively, at the direction of the owner, the retester may render the cylinder incapable of holding pressure.

(iii) When a cylinder is required to be condemned, the retester shall notify the cylinder owner, in writing, that the cylinder is condemned and may not be filled with hazardous material for transportation in commerce where use of a specification packaging is required.

(iv) A cylinder that is condemned may not be filled with hazardous material for transportation in commerce where use of a specification packaging is required and may not be marked as meeting the requirements of this section or any DOT exemption. No person may remove or obliterate the ''CONDEMNED'' marking.

(7) *Retester markings.* (i) Each cylinder passing retest must be marked with the retester's identification number set in a square pattern, between the month and year of the retest date, in characters not less than ⅛-inch high. The first character of the retester identification number must appear in the upper left corner of the square pattern; the second in the upper right; the third in the lower right, and the fourth in the lower left. Example: A cylinder retested in May 1994, and approved by a person who has been issued retester identification number ''A123'', would be marked plainly and permanently into the metal of the cylinder in accordance with location requirements of the cylinder specification or on a metal plate permanently secured to the cylinder in accordance with paragraph (c) of this section:

```
    A  1
5          94
    3  2
```

(ii) Markings of previous tests may not be obliterated. A cylinder that is subject to the requirements of paragraph (e) (10), (11) (modified hydrostatic test only), (13) or (14) of this section is not required to be marked with a retester identification number. A cylinder requalified by the modified hydrostatic test method or external inspection must be marked after a retest or an inspection by stamping the date of retest or reinspection on the cylinder followed by the symbol ''E'' (external inspection) or ''S'' (modified hydrostatic test method) as appropriate. However, a cylinder subject to the requirements of § 173.301(j) may not be marked with a retester identification number. Variation from the marking requirement may be approved on written request to the Associate Administrator for Hazardous Materials Safety.

(8) *Recordkeeping.* A retester shall maintain the following records at the retesting location, on paper or in a form from which a paper copy can be produced on request.

(i) Records of authority to inspect, retest and mark must be maintained, as follows:

(A) Current retester identification number issuance letter;

(B) If the retester identification number has expired and renewal is pending, a copy of the renewal request; and

(C) Copies of notifications to Associate Administrator for Hazardous Materials Safety required under paragraph (e)(2)(iv) of this section.

(ii) Daily records of visual inspection and hydrostatic retest must be maintained until either the expiration of the retest period or until the cylinder is again reinspected or retested, whichever occurs first. A single date may be used for each retest sheet, provided each retest on the sheet was conducted on that date. Ditto marks or a solid vertical line may be used to indicate repetition of the preceding entry for the following entries: date; actual dimensions or a symbol; if present, manufacturer's name or symbol; if present, owner's name or symbol and retest operator. Blank spaces may not be used to indicate repetition of a prior entry. Records must include—

(A) For each test to demonstrate calibration, the date; serial number of the calibrated cylinder; calibration test pressure; total, elastic and permanent expansions; and legible identification of retest operator. The retest operator must be able to demonstrate that the results of the daily calibration verification correspond to the hydrostatic retests that were performed on that day. The daily verification of calibration(s) may be recorded on the same sheets as, and with, retest records for that date;

(B) For each cylinder retested or visually inspected, records containing the

date; serial number; ICC/DOT specification or exemption number; service pressure; actual dimensions or a symbol; if present, manufacturer's name or symbol; if present, owner's name or symbol; result of visual inspection; actual test pressure; total, elastic and permanent expansions; percent permanent expansion; disposition, with reason for any repeated retest, rejection or condemnation; and legible identification of test operator. For each cylinder marked pursuant to § 173.302(c)(5), the retest sheet must indicate the method by which any average or maximum wall stress was computed. Records must be kept for all completed retests, as well as unsuccessful retests under paragraph (e)(4)(v) of this section. The entry for a later retest under paragraph (e)(4)(v) of this section after a failure to hold test pressure, or retest of a cylinder requalified after rejection, must indicate the date of the earlier inspection or retest; and

(C) Calculations of average and maximum wall stress pursuant to § 173.302(c)(3), if performed.

(iii) The most recent certificate of calibration must be maintained for each calibrated cylinder used by the retester.

(9) *DOT 4-series cylinders.* A DOT 4-series cylinder, except 4L cylinders, that at any time shows evidence of a leak or of internal or external corrosion, denting, bulging or rough usage to the extent that it is likely to be weakened appreciably; or that has lost five percent or more of its official tare weight must be retested before being recharged and shipped. (Refer to CGA Pamphlet C–6 or C–6.3, as applicable, regarding cylinder weakening.) After retest, the actual tare weight must be recorded as the new tare weight.

(10) *Cylinders 12 pounds or less with service pressures of 300 psi or less.* A cylinder of 12 pounds or less water capacity authorized for service pressure of 300 psi or less must be given a complete external visual inspection at the time periodic retest becomes due. External visual inspection must be in accordance with CGA Pamphlet C–6 or C–6.3. The cylinder may be hydrostatically retested without a water jacket and without determining total and permanent expansions. The retest is successful if the cylinder, when examined under test pressure, does not display a defect described in paragraph (e)(6)(i)(B) or (C) of this section.

(11) *Modified hydrostatic retest.* A cylinder made in compliance with specification DOT 4B, DOT 4BA, DOT 4BW, DOT 4E or ICC–26–300[2] (§§ 178.50, 178.51, 178.61, 178.68 of this subchapter) that is used exclusively for anhydrous dimethylamine; anhydrous methylamine; anhydrous trimethylamine; methyl chloride; liquefied petroleum gas; methylacetylene-propadiene stabilized; or dichlorodifluoromethane, difluoroethane, difluorochloroethane, chlorodifluoromethane, chlorotetrafluoroethane, trifluorochloroethylene, or mixture thereof, or mixtures of one or more with trichlorofluoromethane; and that is commercially free from corroding components and protected externally by a suitable corrosion-resistant coating (such as galvanizing or painting) may be given a hydrostatic retest every 12 years instead of every five years. Alternatively, the cylinder may be subjected to internal hydrostatic pressure of at least two times the marked service pressure without determination of expansions, but this latter type of test must be repeated every seven years after expiration of the first 12-year period. When subjected to the latter test, the cylinder must be carefully examined under test pressure and removed from service if a leak or other harmful defect exists. A cylinder requalified by the modified hydrostatic test method must be marked after a retest or an inspection by stamping the date of retest or reinspection on the cylinder followed by a ''S''.

(12) A cylinder made in conformance with specification DOT–3A, DOT–3AA, DOT–3B, DOT–4BA or DOT–4BW (§§ 178.36, 178.37, 178.38, 178.51, 178.61 of this subchapter) having a service pressure of 300 psi or less that is used exclusively for methyl bromide, liquid; mixtures of methyl bromide and ethylene dibromide, liquid; mixtures of methyl bromide and chlorpicrin, liquid;

[2] For filling at 450 p.s.i. and below. Use of existing cylinders authorized; new construction not authorized.

mixtures of methyl bromide and petroleum solvents, liquid; or methyl bromide and nonflammable, nonliquefied compressed gas mixtures, liquid; that is commercially free of corroding components, and that is protected externally by a suitable corrosion resistant coating (such as galvanizing or painting) and internally by a suitable corrosion resistant lining (such as galvanizing) may be tested every 10 years instead of every five years, provided that a visual internal and external examination of the cylinder is conducted every five years in accordance with CGA Pamphlet C–6. The cylinder must be examined at each filling, and rejected if a dent, corroded area, leak or other condition indicates possible weakness.

(13) A cylinder made in conformance with a specification listed in the table in this paragraph (e)(13) and used exclusively in the service indicated may, instead of a periodic hydrostatic retest, be given a complete external visual inspection at the time periodic retest becomes due. External visual inspection must be in accordance with CGA Pamphlet C–6 or C–6.3. When this inspection is used instead of hydrostatic retesting, subsequent inspections are required at five-year intervals after the first inspection. Inspections must be made only by competent persons and the results recorded and maintained in accordance with paragraph (e)(8) of this section. Records shall include: date of inspection (month and year); DOT specification number; cylinder identification (registered symbol and serial number, date of manufacture, and owner); type of cylinder protective coating (including statement as to need of refinishing or recoating); conditions checked (e.g., leakage, corrosion, gouges, dents or digs in shell or heads, broken or damaged footring or protective ring or fire damage); disposition of cylinder (returned to service, returned to cylinder manufacturer for repairs or scrapped). A cylinder that passes inspection shall be marked with the date in accordance with paragraph (e)(7) of this section. An ''E'' after the date indicates requalification by the external inspection method. Specification cylinders must be in exclusive service as follows:

Cylinders made in compliance with—	Used exclusively for—
DOT–4, DOT–3A, DOT–3AA, DOT–3A480X, DOT–4A, DOT–4AA480..	Anhydrous ammonia of at least 99.95% purity.
DOT–3A, DOT–3AA, DOT–3A480X, DOT–3B, DOT–4B, DOT–4BA, DOT–4BW, ICC–26–240,[1] ICC–26–300[1].	Butadiene, inhibited, which is commercially free from corroding components.
DOT–3A, DOT–3A480X, DOT–3AA, DOT–3B, DOT–4A, DOT–4AA480, DOT–4B, DOT–4BA, DOT–4BW.	Cyclopropane which is commercially free from corroding components.
DOT–3A, DOT–3AA, DOT–3A480X, DOT–4B, DOT–4BA, DOT–4BW, DOT–4E.	Fluorinated hydrocarbons and mixtures thereof which are commercially free from corroding components.
DOT–3A, DOT–3AA, DOT–3A480X, DOT–3B, DOT–4B, DOT–4BA, DOT–4BW, DOT–4E, ICC–26–240,1 ICC–26–3001.	Liquefied hydrocarbon gas which is commercially free from corroding components.
DOT–3A, DOT–3AA, DOT–3A480X, DOT–3B, DOT–4B, DOT–4BA, DOT–4BW, DOT–4E, ICC–26–2401, ICC–26–3001.	Liquefied petroleum gas which is commercially free from corroding components.
DOT–3A, DOT–3AA, DOT–3B, DOT–4B, DOT–4BA, DOT–4BW, DOT–4E.	Methylacetylene-propadiene, stabilized, which is commercially free from corroding components.
DOT–3A, DOT–3AA, DOT–3B, DOT–4B, DOT–4BA, DOT–4BW.	Anhydrous mono, di, trimethylamines which are commercially free from corroding components.
DOT–4B240, DOT–4BW240	Ethyleneimine, inhibited.

[1] Use of existing cylinders authorized; new construction not authorized.

(14) *Cylinders containing anhydrous ammonia.* A cylinder made in compliance with specification DOT–3A, DOT–3A 480X, or DOT–4AA480 used exclusively for anhydrous ammonia, commercially free from corroding components, and protected externally by a suitable corrosion-resistant coating (such as painting) may be retested every 10 years instead of every five years.

(15) *3HT cylinders.* (i) In addition to the other requirements of this section, a cylinder marked DOT–3HT must be requalified in accordance with CGA Pamphlet C–8.

(ii) The cylinder must be condemned:

(A) If elastic expansion exceeds the marked rejection elastic expansion. A cylinder made before January 17, 1978, and not marked with a rejection elastic expansion in cubic centimeters near

the marked original elastic expansion must be so marked before the next retest date. The rejection elastic expansion for a cylinder is 1.05 times its original elastic expansion.

(B) If there is evidence of denting or bulging.

(C) Twenty-four years after the date of the original test or after 4,380 pressurizations, whichever occurs first. If a cylinder is recharged, on average, more than once every other day, an accurate record of the number of rechargings must be maintained by the cylinder owner or his/her agent.

(iii) The retest date and retester identification number must be applied by low-stress steel stamp to a depth no greater than that of the marking at the time of manufacture. Stamping on the sidewall is not authorized.

(16) *DOT–3A or 3AA cylinders.* (i) A cylinder made in conformance with specification DOT–3A or 3AA with a water capacity of 125 pounds or less that is removed from any cluster, bank, group, rack or vehicle each time it is filled, may be retested every ten years instead of every five years, provided the cylinder complies with all of the following—

(A) The cylinder was manufactured after December 31, 1945;

(B) The cylinder is used exclusively for air, argon, cyclopropane, ethylene, helium, hydrogen, krypton, neon, nitrogen, nitrous oxide, oxygen, sulfur hexafluoride, xenon, permitted mixtures of these gases (see § 173.301(a)) and permitted mixtures of these gases with up to 30 percent by volume of carbon dioxide, provided that the gas has a dew point at or below minus 52° F at 1 atmosphere;

(C) Before each refill, the cylinder passes the hammer test specified in CGA Pamphlet C–6;

(D) The cylinder is dried immediately after hydrostatic testing to remove all traces of free water;

(E) The cylinder is not used for underwater breathing; and

(F) Each cylinder is stamped with a five-point star at least one-fourth of an inch high immediately following the test date.

(ii) If, since the last required hydrostatic retest, a cylinder has not been used exclusively as specified in paragraph (e)(16)(i)(B) of this section, but currently conforms with all other provisions of paragraph (e)(16)(i) of this section, it may be retested every 10 years instead of every five years, provided it is first retested and examined as prescribed by § 173.302(c)(2), (3) and (4).

(iii) Except as specified in paragraph (e)(16)(ii) of this section, if a cylinder marked with a star is charged with a compressed gas other than as specified in this paragraph (e)(16), the star following the most recent test date must be obliterated. The cylinder must be retested five years from the marked retest date, or prior to the first charging with a compressed gas, if the required five-year retest period has passed.

(17) *Cylinders containing corrosive materials.* (i) A cylinder that previously contained a Class 8 (corrosive) material may not be used to transport a compressed gas in commerce unless the following requirements are met—

(A) The cylinder is visually inspected, internally and externally, in accordance with CGA Pamphlet C–6;

(B) Regardless of the date of previous retest, the cylinder is subjected to and passes inspection and hydrostatic retest in accordance with this section; and

(C) The record prescribed in paragraph (e)(8) of this section includes: the month and year of inspection and test; the cylinder identification (including ICC or DOT specification number, registered symbol, serial number, date of manufacture and owner); the conditions checked (e.g., leakage, corrosion, gouges, dents, or digs in shell or heads, broken or damaged footrings, fire damage) and the disposition of the cylinder (returned to service, returned to the manufacturer for repairs, or scrapped).

(ii) A cylinder requalified for compressed gas service in accordance with this paragraph (e)(17) may have its next retest and inspection scheduled from the date of the inspection and retest prescribed in this paragraph (e). If decontamination cannot remove all significant residue or impregnation by the Class 8 material, the cylinder may not be used to transport compressed gas in commerce.

(18) *DOT 8 and 8AL cylinders.* (i) Each owner of a DOT 8 or 8AL cylinder used to transport acetylene must have the cylinder shell and the porous filler requalified in accordance with CGA Pamphlet C–13. Requalification must be performed in accordance with the following schedule:

Date of cylinder manufacture	Shell (visual inspection) requalification		Porous filler requalification	
	Initial	Subsequent	Initial	Subsequent
Before January 1, 1991	Before January 1, 2001	10 yrs	Before January 1, 2011	Not required.
On or after January 1, 1991	10 yrs [1]	10 yrs	3 to 30 yrs [2]	Not required.

[1] Years from date of cylinder manufacture.
[2] For a cylinder manufactured on or after January 1, 1991, requalification of the porous filler must be performed no sooner than 3 years, and no later than 20 years, from the date of manufacture.

(ii) Unless requalified and marked in accordance with CGA Pamphlet C–13 before October 1, 1994, an acetylene cylinder must be requalified by a person who holds a valid retester identification number. Each cylinder successfully passing a shell or filler requalification must be marked with the retester's identification number in accordance with paragraph (e)(7) of this section. In addition, the cylinder must be marked to identify the type of requalification performed in accordance with paragraph 5.6 of CGA Pamphlet C–13. For example, the letter ''S'' must be used for a shell requalification and the letter ''F'' for a porous filler requalification.

(iii) If a cylinder valve is replaced, a cylinder valve of the same weight must be used or the tare weight of the cylinder must be adjusted to compensate for valve weight differential.

(19) *Cylinders used as fire extinguishers.* Only DOT specification cylinders used as fire extinguishers and meeting Special Provision 18 in § 172.102(c)(1) of this subchapter may be retested in accordance with this paragraph (e)(19).

(i) A DOT specification 4B, 4BA, 4B240ET or 4BW (§§ 178.50, 178.51, 178.55 and 178.61 of this subchapter) cylinder may be retested as follows:

(A) For a cylinder with a water capacity of 12 pounds or less by hydrostatic test using the water jacket method or by hydrostatic test without determination of expansion (modified hydrostatic test method). A retest must be performed 12 years after the original test date and at 12-year intervals thereafter.

(B) For a cylinder having a water capacity over 12 pounds—

(*1*) By hydrostatic test without determination of expansion (modified hydrostatic test method). A retest must be performed 12 years after the original test date and at 7-year intervals; or

(*2*) By hydrostatic test using the water jacket method. A retest must be performed 12 years after the original test date and at 12-year intervals thereafter.

(ii) A DOT specification 3A, 3AA, or 3AL (§§ 178.36, 178.37 and 178.46 of this subchapter) cylinder may be retested by hydrostatic test using the water jacket method. A retest must be performed 12 years after the original test date and at 12-year intervals thereafter.

(f) *Cylinders subjected to the action of fire.* A cylinder which has been subjected to the action of fire must not again be placed in service until it has been properly reconditioned as follows:

(1) A cylinder made of plain carbon steel with not over 0.25 percent carbon nor over 0.90 manganese need not be reheat-treated but must pass the periodic retest requirements as specified in paragraph (e) of this section.

(2) DOT 8 and 8AL cylinders made entirely of carbon steel with 0.25 percent or less carbon and with 0.90 percent or less manganese, must be reinspected to determine the condition of the cylinder and the porous filler, as prescribed in CGA Pamphlet C–13. If the cylinder has been damaged, the porous filler must be removed and the cylinder must be heat treated and retested. The porous filler must be replaced in accordance with the specification to which the cylinder was made. A cylinder may be returned to service without reheat treatment or retest if the cylinder has no

fire or mechanical damage and the porous filler is unchanged and intact.

(3) The inner cylinders made under specification DOT–4L (§ 178.57 of this chapter) may be used after again passing the original hydrostatic test.

(4) DOT 3AL and DOT 4E aluminum cylinders may not be reheat treated and must be removed from service.

(5) Other cylinders must be reheat treated and reconditioned as specified in paragraph (g) of this section.

(g) *Reheat treatment.* (1) Previous to the reheat treatment procedure hereinafter prescribed, each cylinder must be subjected to a careful internal and external inspection.

(2) Cylinders must be segregated for reheat treatment in lots of 100 or less cylinders of the same general size having practically the same chemical composition.

(3) The reheat treatment operation must be carried out, supervised, and reported as prescribed for the heat treatment in the specification covering the manufacture of the cylinder in question. Data from the original reports of manufacture of the cylinders must be available.

(4) The reheat treatment must be followed by hydrostatic retest, such retest to be carried out, supervised, and reported as prescribed for the hydrostatic tests in the specification covering the manufacture of the cylinder in question. The results of the retest must meet either of the following conditions:

(i) The permanent expansion shall be from zero to 10 percent of the total expansion in the hydrostatic retest and one cylinder from each lot shall pass the requirements of the flattening and physical tests prescribed. Failure to pass the flattening or physical tests will reject the lot or;

(ii) The permanent expansion shall not be less than 3 percent nor more than 10 percent of the total expansion in the hydrostatic retest, in which case the flattening and physical tests are not required. For this alternative method the hydrostatic retest pressure may not exceed 115 percent of the minimum prescribed test pressure.

(h) *Repair by welding or brazing of specifications DOT–3A, 3AA, 3B, 3C cylinders.* Repair of specifications DOT–3A, 3AA, 3B or 3C (§§ 178.36(e), 178.37(e), 178.38(e), and 178.40(e) of this subchapter) cylinders by welding or brazing authorized, but only for the removal and replacement of neckrings and footrings attached to cylinders originally manufactured to conform to §§ 178.36–9(a), 178.37–9(a), 178.38–9(a), and 178.40–9(a) of this subchapter. Removal and replacement must be done by a regular manufacturer of this type of cylinder. After removal and before replacement of such parts, cylinders must be inspected, and defective ones rejected. Cylinders, neckrings, footrings, and method of replacement must conform to § 178.36(e), 178.37(e), 178.38(e), or 178.40(e) of this subchapter whichever applies. Replacement must be followed by reheat treating, testing, inspection, and supervised and reported as prescribed by the specification covering their original manufacture. Inspector's reports must conform with that required by the specification covering original manufacture with the word ''repaired'' substituted for ''manufactured.'' Show original markings and the new additional markings added, and statement: ''Cylinders were carefully inspected for defects after removal of neckrings and footrings and after replacement, which replacement was made by process of _____ (Welding-brazing).''

(i) *Repair by welding or brazing of DOT–4 series and DOT–8, welded or brazed cylinders.* Repairs on DOT–4 series and DOT–8 series welded or brazed cylinders are authorized to be made by welding or brazing. Such repairs must be made by a manufacturer of these types of DOT cylinders or by a repair facility approved by the Associate Administrator for Hazardous Materials Safety and by a process similar to that used in its manufacture and under the following specific requirements:

(1) Cylinders with injurious defects in welded joints in or on pressure parts must be repaired by completely removing the defect prior to rewelding.

(2) Cylinders with injurious defects in brazed joints in or on pressure parts must be repaired by rebrazing.

(3) Cylinders during welding must be free of materials in contact with the welded joint that may impair the serviceability of the metal in or adjacent

to the weld. (Precautions must be taken to prevent acetylene cylinder steels from picking up carbon during repair.)

(4) Neckrings, footrings, or other nonpressure attachments authorized by the specification may be replaced or repaired. Repair or replacement of footrings, neckrings, or other nonpressure attachments authorized by the specification for DOT–4BA and 8AL (§§178.51 and 178.60 of this subchapter) cylinders may be made without conforming to the requirements of paragraph (i)(6) of this section provided the following requirements are met:

(i) Must be done by a manufacturer of these types of DOT cylinders or by a repair facility approved by the Associate Administrator for Hazardous Materials Safety.

(ii) The welder shall have available to him information as to the procedure equipment, and rod used during manufacture and shall use a similar method for repair.

(iii) Repairs must be by metal arc welding only. Welds shall be 3 inches maximum length and spaced at least 3 inches apart.

(iv) Welds shall not be made on or near a brazed joint (to prevent the possibility of copper penetration).

(v) After repair the welds are to be inspected visually for weld quality.

(vi) After repair the weld area is to be leak tested at the service pressure of the cylinder.

(5) After removal, and before replacement of attachments, cylinders must be inspected and defective ones rejected, repaired or rebuilt.

(6) After repair, cylinders must be reheat-treated, tested, inspected and reported when and as prescribed by the specification covering their original manufacture when welding or brazing seams in a pressure part of a cylinder; or when welding or brazing on pressure parts of cylinders of plain carbon steels with carbon over 0.25 percent or manganese over 1.00 percent or of alloy steels except as provided in §173.34(i)(7).

NOTE 1: Heat-treatment is not required after welding or brazing weldable low carbon parts to attachments of similar material which has been previously welded or brazed to the top or bottom of cylinders and properly heat-treated, provided such subsequent welding or brazing does not produce a temperature in excess of 400° F. in any part of the top or bottom material.

(7) Repair of cylinders must be followed by a proof pressure leakage test at prescribed test pressure and visual examination for weld quality when welding on pressure parts of cylinders of plain carbon 0.25 percent or less and manganese 1.00 percent or less, or when repairing steel types 1315, NAX and GLX by the following procedure:

(i) Leakage through the welding metal may be repaired without subsequent reheat treatment of the cylinder.

(ii) Repair permitted only by either the metal arc or tungsten inert gas shielded arc process. E7015, 7016, or 7018 electrodes not larger than ⅛ inch diameter shall be used for the metal arc process.

(iii) Weld defects must be removed by grinding or chipping before repair by the metal arc process. The tungsten inert gas shielded arc process may be used for repair only when such repair can be made by puddling. Repair weld shall not exceed 1 inch in length nor be closer than 3 inches to the next repair area.

(iv) Repair of weld defects which have any cracking is not permitted.

(j) *Repair of non-pressure attachments.* Repair of non-pressure attachments by welding or brazing without affecting a pressure part of the cylinder must be followed by visual examination for weld quality.

(k) *Prohibited repairs.* Walls, heads or bottoms of cylinders with injurious defects or leaks in base metal shall not be repaired, but may be replaced as provided for in paragraph (l) of this section.

(l) *Rebuilding of DOT–4 series and DOT–8, welded or brazed cylinders.* Rebuilding of DOT–4 series and DOT–8 series, welded or brazed cylinders is authorized. Such rebuilding must be done by a manufacturer of these types of DOT cylinders or by a repair facility approved by the Associate Administrator for Hazardous Materials Safety and by a process similar to that used in its original manufacture and under the following specific requirements:

(1) The replacement of a pressure part such as wall, heads, or bottoms of

cylinders or the replacement of the porous filling material, shall be considered as rebuilding.

(2) Rebuilt cylinders shall be considered as new cylinders and shall conform to all the requirements of the specifications applying, including verification of material, examination, inspection, etc., and the rendering of the proper reports to the purchaser, cylinder rebuilder, and the Associate Administrator for Hazardous Materials Safety. Report must show that cylinders were rebuilt.

(3) Information in sufficient detail regarding previous serial numbers and identification symbols must be filed with the Associate Administrator for Hazardous Materials Safety.

(Approved by the Office of Management and Budget under control number 2137–0022)

[29 FR 18671, Dec. 29, 1964. Redesignated at 32 FR 5606, Apr. 5, 1967]

EDITORIAL NOTE: For FEDERAL REGISTER citations affecting § 173.34, see the List of CFR Sections Affected appearing in the Finding Aids section of this volume.

§ 173.35 Hazardous materials in intermediate bulk containers.

(a) No person may offer or accept a hazardous material for transportation in an intermediate bulk container except as authorized by this subchapter. Each intermediate bulk container used for the transportation of hazardous materials must conform to the requirements of its specification and regulations for the transportation of the particular commodity. A specification intermediate bulk container, for which the prescribed periodic retest or inspection under subpart D of part 180 of this subchapter is past due, may not be filled and offered for transportation until the retest or inspection have been successfully completed. This requirement does not apply to any intermediate bulk container filled prior to the retest or inspection due date.

(b) Before being filled and offered for transportation, each intermediate bulk container and its service equipment must be visually inspected to ensure that it is free from corrosion, contamination, cracks, or other damage which would render the intermediate bulk container unsafe for transportation. No rigid plastic or composite intermediate bulk container with repaired bodies may be reused; however, plastic components, such as closures, valves, or legs, may be replaced. Fiberboard, wooden, or flexible intermediate bulk containers may not be reused.

(c) A metal intermediate bulk container, or a part thereof, subject to thinning by mechanical abrasion or corrosion due to the lading, must be protected by providing a suitable increase in thickness of material, a lining or some other suitable method of protection. Increased thickness for corrosion or abrasion protection must be added to the wall thickness specified in § 178.705(c)(1)(iv) of this subchapter.

(d) Notwithstanding requirements in § 173.24b of this subpart, when filling an intermediate bulk container with liquids, sufficient ullage must be left to ensure that, at the mean bulk temperature of 50 °C (122 °F), the intermediate bulk container is not filled to more than 98 percent of its water capacity.

(e) Where two or more closure systems are fitted in series, the system nearest to the hazardous material being carried must be closed first.

(f) During transportation—

(1) No hazardous material may remain on the outside of the intermediate bulk container; and

(2) Each intermediate bulk container must be securely fastened to or contained within the transport unit.

(g) Each intermediate bulk container used for transportation of solids which may become liquid at temperatures likely to be encountered during transportation must also be capable of containing the substance in the liquid state.

(h) Liquid hazardous materials may only be offered for transportation in a metal, rigid plastic, or composite intermediate bulk container that is appropriately resistant to an increase of internal pressure likely to develop during transportation.

(1) A rigid plastic or composite intermediate bulk container may only be filled with a liquid having a vapor pressure less than or equal to the greater of the following two values: the first value is determined from any of the methods in paragraphs (h)(1) (i), (ii) or (iii) of this section. The second value is

determined by the method in paragraph (h)(1)(iv) of this section.

(i) The gauge pressure (pressure in the intermediate bulk container above ambient atmospheric pressure) measured in the intermediate bulk container at 55 °C (131 °F). This gauge pressure must not exceed two-thirds of the marked test pressure and must be determined after the intermediate bulk container was filled and closed at 15 °C (60 °F) to less than or equal to 98 percent of its capacity.

(ii) The absolute pressure (vapor pressure of the hazardous material plus atmospheric pressure) in the intermediate bulk container at 50 °C (122 °F). This absolute pressure must not exceed four-sevenths of the sum of the marked test pressure and 100 kPa (14.5 psi).

(iii) The absolute pressure (vapor pressure of the hazardous material plus atmospheric pressure) in the intermediate bulk container at 55 °C (131 °F). This absolute pressure must not exceed two-thirds of the sum of the marked test pressure and 100 kPa (14.5 psi).

(iv) Twice the static pressure of the substance, measured at the bottom of the intermediate bulk container. This value must not be less than twice the static pressure of water.

(2) Gauge pressure (pressure in the intermediate bulk container above ambient atmospheric pressure) in metal intermediate bulk containers must not exceed 110 kPa (16 psig) at 50 °C (122 °F) or 130 kPa (18.9 psig) at 55 °C (131 °F).

(i) The requirements in this section do not apply to DOT–56 or –57 portable tanks.

(j) No intermediate bulk container may be filled with a Packing Group I liquid. Rigid plastic, composite, flexible, wooden or fiberboard intermediate bulk containers used to transport Packing Group I solid materials may not exceed 1.5 cubic meters (53 cubic feet) capacity. For Packing Group I solids, a metal intermediate bulk container may not exceed 3 cubic meters (106 cubic feet) capacity.

(k) When an intermediate bulk container is used for the transportation of liquids with a flashpoint of 60.5 °C (141 °F) (closed cup) or lower, or powders with the potential for dust explosion, measures must be taken during product loading and unloading to prevent a dangerous electrostatic discharge.

(l) *Intermediate bulk container filling limits.*

(1) Except as provided in this section, an intermediate bulk container may not be filled with a hazardous material in excess of the maximum gross mass marked on that container.

(2) An intermediate bulk container which is tested and marked for Packing Group II liquid materials may be filled with a Packing Group III liquid material to a gross mass not exceeding 1.5 times the maximum gross mass marked on that container, if all the performance criteria can still be met at the higher gross mass.

(3) An intermediate bulk container which is tested and marked for liquid hazardous materials may be filled with a solid hazardous material to a gross mass not exceeding the maximum gross mass marked on that container. In addition, an intermediate bulk container intended for the transport of liquids which is tested and marked for Packing Group II liquid materials may be filled with a Packing Group III solid hazardous material to a gross mass not exceeding the marked maximum gross mass multiplied by 1.5 if all the performance criteria can still be met at the higher gross mass.

(4) An intermediate bulk container which is tested and marked for Packing Group I solid materials may be filled with a Packing Group II solid material to a gross mass not exceeding the maximum gross mass marked on that container, multiplied by 1.5, if all the performance criteria can be met at the higher gross mass; or a Packing Group III solid material to a gross mass not exceeding the maximum gross mass marked on the intermediate bulk container, multiplied by 2.25, if all the performance criteria can be met at the higher gross mass. An intermediate bulk container which is tested and marked for Packing Group II solid materials may be filled with a Packing Group III solid material to a gross mass not exceeding the maximum gross

mass marked on the intermediate bulk container, multiplied by 1.5.

[Amdt. 173–238, 59 FR 38064, July 26, 1994, as amended by Amdt. 173–243, 60 FR 40038, Aug. 4, 1995]

§ 173.40 General packaging requirements for poisonous materials required to be packaged in cylinders.

When this section is referenced in the packaging section for a hazardous material elsewhere in this part, the following requirements are applicable to cylinders used for that material:

(a) *Authorized cylinders.* A cylinder must conform to one of the specifications for cylinders in subpart C of part 178 of this subchapter, except that Specification 8, 8AL and 39 cylinders are not authorized.

(b) *Outage and pressure requirements.* The pressure of the hazardous material at 55 °C (131 °F) must not exceed the service pressure of the cylinder. Sufficient outage shall be provided so that the cylinder will not be liquid full at 55 °C (131 °F).

(c) *Closures.* Each cylinder must be closed with a plug or valve conforming to the following:

(1) Each plug or valve must have a taper-threaded connection directly to the cylinder and be capable of withstanding the test pressure of the cylinder;

(2) Each valve must be of the packless type with non-perforated diaphragm, except that for corrosive materials, a valve may be of the packed type provided the assembly is made gas-tight by means of a seal cap with gasketed joint attached to the valve body or the cylinder to prevent loss of material through or past the packing;

(3) Each valve outlet must be sealed by a threaded cap or threaded solid plug, and

(4) Cylinder, valves, plugs, outlet caps, luting and gaskets must be compatible with each other and with the lading.

(d) *Additional protection.* Additional protection requirements for thin-walled cylinders and for cylinders equipped with valves are as follows:

(1) Each cylinder which has a wall thickness at any point of less than 2.03 mm (0.080 inch) and each cylinder which does not have fitted valve protection must be overpacked in a 4Cl, 4D, 4F, 4G, 4Hl or 4H2 box. The box must conform to overpack provisions in § 173.25. Box and valve protection must be of sufficient strength to protect all parts of the cylinder and valve, if any, from deformation and breakage resulting from a drop of 2.0 m (7 ft) or more onto a concrete floor, impacting at an orientation most likely to cause damage.

(2) Each cylinder equipped with a valve, if not overpacked in a box in accordance with paragraph (d)(1) of this section, must be equipped with a protective cap or other means of valve protection sufficient to protect the valve from deformation and breakage resulting from a drop of 2.0 m (7 ft) or more onto a concrete floor, impacting at an orientation most likely to cause damage.

(e) *Interconnection.* Cylinders may not be interconnected.

[Amdt. 173–224, 55 FR 52616, Dec. 21, 1990]

Subpart C—Definitions, Classification and Packaging for Class 1

SOURCE: Amdt. 173–224, 55 FR 52617, Dec. 21, 1990, unless otherwise noted.

§ 173.50 Class 1—definitions.

(a) Explosive. For the purpose of this subchapter, an *explosive* means any substance or article, including a device, which is designed to function by explosion (i.e., an extremely rapid release of gas and heat) or which, by chemical reaction within itself, is able to function in a similar manner even if not designed to function by explosion, unless the substance or article is otherwise classed under the provision of this subchapter.

(b) Explosives in Class 1 are divided into six divisions as follows:

(1) *Division 1.1* consists of explosives that have a mass explosion hazard. A mass explosion is one which affects almost the entire load instantaneously.

(2) *Division 1.2* consists of explosives that have a projection hazard but not a mass explosion hazard.

(3) *Division 1.3* consists of explosives that have a fire hazard and either a

minor blast hazard or a minor projection hazard or both, but not a mass explosion hazard.

(4) *Division 1.4* consists of explosives that present a minor explosion hazard. The explosive effects are largely confined to the package and no projection of fragments of appreciable size or range is to be expected. An external fire must not cause virtually instantaneous explosion of almost the entire contents of the package.

(5) *Division 1.5*[1] consists of very insensitive explosives. This division is comprised of substances which have a mass explosion hazard but are so insensitive that there is very little probability of initiation or of transition from burning to detonation under normal conditions of transport.

(6) Division 1.6[2] consists of extremely insensitive articles which do not have a mass explosive hazard. This division is comprised of articles which contain only extremely insensitive detonating substances and which demonstrate a negligible probability of accidental initiation or propagation.

[Amdt. 173–224, 55 FR 52617 Dec. 21, 1990, as amended at 56 FR 66267, Dec. 20, 1991]

§ 173.51 Authorization to offer and transport explosives.

(a) Unless otherwise provided in this subpart, no person may offer for transportation or transport an explosive, unless it has been tested and classed and approved by the Associate Administrator for Hazardous Materials Safety (§ 173.56).

(b) Reports of explosives approved by the Department of Defense or the Department of Energy must be filed with, and receive acknowledgement in writing by, the Associate Administrator for Hazardous Materials Safety prior to such explosives being offered for transportation.

§ 173.52 Classification codes and compatibility groups of explosives.

(a) The classification code for an explosive, which is assigned by the Associate Administrator for Hazardous Materials Safety in accordance with this subpart, consists of the division number followed by the compatibility group letter. Compatibility group letters are used to specify the controls for the transportation, and storage related thereto, of explosives and to prevent an increase in hazard that might result if certain types of explosives were stored or transported together. Transportation compatibility requirements for carriers are prescribed in §§ 174.81, 175.78. 176.83 and 177.848 of this subchapter for transportation by rail, air, vessel, and public highway, respectively, and storage incidental thereto.

(b) Compatibility groups and classification codes for the various types of explosives are set forth in the following tables. Table 1 sets forth compatibility groups and classification codes for substances and articles described in the first column of Table 1. Table 2 shows the number of classification codes that are possible within each explosive division. Altogether, there are 35 possible classification codes for explosives.

TABLE 1.—CLASSIFICATION CODES

Description of substances or article to be classified	Compatibility group	Classification code
Primary explosive substance	A	1.1A
Article containing a primary explosive substance and not containing two or more effective protective features. Some articles, such as detonators for blasting, detonator assemblies for blasting and primers, cap-type, are included, even though they do not contain primary explosives..	B	1.1B 1.2B 1.4B
Propellant explosive substance or other deflagrating explosive substance or article containing such explosive substance.	C	1.1C 1.2C 1.3C 1.4C
Secondary detonating explosive substance or black powder or article containing a secondary detonating explosive substance, in each case without means of initiation and without a propelling charge, or article containing a primary explosive substance and containing two or more effective protective features.	D	1.1D 1.2D 1.4D 1.5D

[1] The probability of transition from burning to detonation is greater when large quantities are transported in a vessel.

[2] The risk from articles of Division 1.6 is limited to the explosion of a single article.

TABLE 1.—CLASSIFICATION CODES—Continued

Description of substances or article to be classified	Compatibility group	Classification code
Article containing a secondary detonating explosive substance, without means of initiation, with a propelling charge (other than one containing flammable liquid gel or hypergolic liquid).	E	1.1E 1.2E 1.4E
Article containing a secondary detonating explosive substance with its means of initiation, with a propelling charge (other than one containing flammable liquid gel or hypergolic liquid) or without a propelling charge.	F	1.1F 1.2F 1.3F 1.4F
Pyrotechnic substance or article containing a pyrotechnic substance, or article containing both an explosive substance and an illuminating, incendiary, tear-producing or smoke-producing substance (other than a water-activated article or one containing white phosphorus, phosphide or flammable liquid or gel or hypergolic liquid).	G	1.1G 1.2G 1.3G 1.4G
Article containing both an explosive substance and white phosphorus	H	1.2H 1.3H
Article containing both an explosive substance and flammable liquid or gel	J	1.1J 1.2J 1.3J
Article containing both an explosive substance and a toxic chemical agent	K	1.2K 1.3K
Explosive substance or article containing an explosive substance and presenting a special risk (e.g., due to water-activation or presence of hybergolic liquids, phosphides or pyrophoric substances) needing isolation of each type.	L	1.1L 1.2L 1.3L
Articles containing only extremely insensitive detonating substances.	N	1.6N
Substance or article so packed or designed that any hazardous effects arising from accidental functioning are limited to the extent that they do not significantly hinder or prohibit fire fighting or other emergency response efforts in the immediate vicinity of the package.	S	1.4S

TABLE 2.—SCHEME OF CLASSIFICATION OF EXPLOSIVES, COMBINATION OF HAZARD DIVISION WITH COMPATIBILITY GROUP

	Compatibility group													
Hazard division	A	B	C	D	E	F	G	H	J	K	L	N	S	A–S
1.1	1.1A	1.1B	1.1C	1.1D	1.1E	1.1F	1.1G	.....	1.1J	.....	1.1L	.....	.....	9
1.2	.....	1.2B	1.2C	1.2D	1.2E	1.2F	1.2G	1.2H	1.2J	1.2K	1.2L	.....	.....	10
1.3	.....	.....	1.3C	.....	.....	1.3F	1.3G	1.3H	1.3J	1.3K	1.3L	.....	.....	7
1.4	.....	1.4B	1.4C	1.4D	1.4E	1.4F	1.4G	.....	.....	.....	.....	.....	1.4S	7
1.5	.....	.....	.....	1.5D	.....	.....	.....	.....	.....	.....	.....	.....	.....	1
1.6	.....	.....	.....	.....	.....	.....	.....	.....	.....	.....	.....	1.6N	.....	1
1.6	1	3	4	4	3	4	4	2	3	2	3	1	1	35

[Amdt. 173–224, 55 FR 52617, Dec. 21, 1990, as amended by Amdt. 173–241, 59 FR 67492, Dec. 29, 1994]

§ 173.53 Provisions for using old classifications of explosives.

Where the classification system in effect prior to January 1, 1991, is referenced in State or local laws, ordinances or regulations not pertaining to the transportation of hazardous materials, the following table may be used to compare old and new hazard class names:

Current classification	Class name prior to Jan. 1, 1991
Division 1.1	Class A explosives.
Division 1.2	Class A or Class B explosives.
Division 1 3	Class B explosive.
Division 1.4	Class C explosives.
Division 1.5	Blasting agents.
Division 1.6	No applicable hazard class.

§ 173.54 Forbidden explosives.

Unless otherwise provided in this subchapter, the following explosives shall not be offered for transportation or transported:

(a) An explosive that has not been approved in accordance with § 173.56 of this subpart.

(b) An explosive mixture or device containing a chlorate and also containing:

(1) An ammonium salt, including a substituted ammonium or quaternary ammonium salt; or

(2) An acidic substance, including a salt of a weak base and a strong acid.

(c) A leaking or damaged package of explosives.

(d) Propellants that are unstable, condemned or deteriorated.

(e) Nitroglycerin. diethylene glycol dinitrate, or any other liquid explosives not specifically authorized by this subchapter.

(f) A loaded firearm (except as provided in 14 CFR 108.11).

(g) Fireworks that combine an explosive and a detonator.

(h) Fireworks containing yellow or white phosphorus.

(i) A toy torpedo, the maximum outside dimension of which exceeds 23 mm (0.906 inch), or a toy torpedo containing a mixture of potassium chlorate, black antimony (antimony sulfide), and sulfur, if the weight of the explosive material in the device exceeds 0.26 g (0.01 ounce).

(j) Explosives specifically forbidden in the §172.101 Table of this subchapter.

(k) Explosives not meeting the acceptance criteria specified in §173.57 of this subchapter.

(l) An explosive article with its means of initiation or ignition installed, unless approved in accordance with §173.56.

[Amdt. 173–224, 55 FR 52617 Dec. 21, 1990, as amended at 56 FR 66267, Dec. 20, 1991; Amdt. 173–236, 58 FR 50236, Sept. 24, 1993]

§173.55 [Reserved]

§173.56 New explosives—definition and procedures for classification and approval.

(a) Definition of new explosive. For the purposes of this subchapter a *new explosive* means an explosive produced by a person who:

(1) Has not previously produced that explosive; or

(2) Has previously produced that explosive but has made a change in the formulation, design or process so as to alter any of the properties of the explosive. An explosive will not be considered a ''new explosive'' if an agency listed in paragraph (b) of this section has determined, and confirmed in writing to the Associate Administrator for Hazardous Materials Safety, that there are no significant differences in hazard characteristics from the explosive previously approved.

(b) Examination, classing and approval. Except as provided in paragraph (j) of this section, no person may offer a new explosive for transportation unless that person has specified to the examining agency the ranges of composition of ingredients and compounds, showing the intended manufacturing tolerances in the composition of substances or design of articles which will be allowed in that material or device, and unless it has been examined, classed and approved as follows:

(1) A new explosive must be examined and assigned a recommended shipping description, class, and classification code by a person approved by the Associate Administrator for Hazardous Materials Safety. The recommendation of class and classification code must be based on the tests and criteria prescribed in §§173.52, 173.57 and 173.58 of this subchapter. Each person requesting approval of a new explosive must submit a copy of the report of examination and assignment of recommended shipping description, class and classification code to the Associate Administrator for Hazardous Materials Safety for approval and must receive written approval and an EX-number from the Associate Administrator for Hazardous Materials Safety before offering that explosive for transportation.

(2) A new explosive made by or under the direction or supervision of a component of the DOD may be examined, classed, and concurred in by:

(i) U.S. Army Technical Center for Explosives Safety (SMCAC–EST), Naval Sea Systems Command (SEA–9934), or Air Force Safety Agency (SEW), when approved by the Chairman, DOD Explosives Board, in accordance with the Department of Defense Explosives Hazard Classification Procedures (TB 700–2, dated December 1989); or

(ii) The agencies and procedures specified in paragraph (b)(1) of this section.

(3) A new explosive made by or under the direction or supervision of the Department of Energy (DOE) may be—

(i) Examined by the DOE in accordance with the Explosives Hazard Classification Procedures (TB 700–2, dated December, 1989), and must be classed and approved by DOE; or

(ii) Examined, classed, and approved in accordance with paragraph (b)(1) of this section.

(4) For a material shipped under the description of ''ammonium nitrate-fuel oil mixture (ANFO)'', the only test required for classification purposes is the Cap Sensitivity Test (Test Method 5(a). prescribed in the Explosive Test Manual). The test must be performed by an agency listed in paragraph (b)(1), (b)(2), or (b)(3) of this section, the manufacturer, or the shipper. A copy of the test report must be submitted to the Associate Administrator for Hazardous Materials Safety before the material is offered for transportation, and a copy of the test report must be retained by the shipper for as long as that material is shipped. At a minimum, the test report must contain the name and address of the person or organization conducting the test, date of the test, quantitative description of the mixture. including prill size and porosity, and a description of the test results.

(c) Filing DOD or DOE approval report. DOD or DOE must file a copy of each approval, accompanied by supporting laboratory data, with the Associate Administrator for Hazardous Materials Safety and receive acknowledgement in writing before offering the new explosive for transportation, unless the new explosive is:

(1) Being transported under paragraph (d) or (e) of this section; or

(2) Covered by a national security classification currently in effect.

(d) Transportation of explosive samples for examination. Notwithstanding the requirements of paragraph (b) of this section with regard to the transportation of a new explosive that has not been approved, a person may offer a sample of a new explosive for transportation, by railroad, highway, or vessel from the place where it was produced to an agency identified in paragraph (b) of this section, for examination if—

(1) The new explosive has been assigned a tentative shipping description and class in writing by the testing agency;

(2) The new explosive is packaged as required by this part according to the tentative description and class assigned, unless otherwise specified in writing by the testing agency; and,

(3) The package is labeled as required by this subchapter and the following is marked on the package:

(i) The words ''SAMPLE FOR LABORATORY EXAMINATION'';

(ii) The net weight of the new explosive; and

(iii) The tentative shipping name and identification number.

(e) Transportation of unapproved explosives for developmental testing. Notwithstanding the requirements of paragraph (b) of this section, the owner of a new explosive that has not been examined or approved may transport that new explosive from the place where it was produced to an explosives testing range if—

(1) It is not a primary (a 1.1A initiating) explosive or a forbidden explosive according to this subchapter;

(2) It is described as a Division 1.1 explosive (substance or article) and is packed, marked, labeled, described on shipping papers and is otherwise offered for transportation in conformance with the requirements of this subchapter applicable to Division 1.1;

(3) It is transported in a motor vehicle operated by the owner of the explosive; and

(4) It is accompanied by a person, in addition to the operator of the motor vehicle, who is qualified by training and experience to handle the explosive.

(f) Notwithstanding the requirements of paragraphs (b) and (d) of this section, the Associate Administrator for Hazardous Materials Safety may approve a new explosive on the basis of an approval issued for the explosive by the competent authority of a foreign government, or when examination of the explosive by a person approved by the Associate Administrator for Hazardous Materials Safety is impracticable, on the basis of reports of tests conducted by disinterested third parties, or may approve the transportation of an explosives sample for the purpose of examination by a person approved by

the Associate Administrator for Hazardous Materials Safety.

(g) Notwithstanding the requirements of paragraph (b) of this section, an explosive may be transported under §§171.11, 171.12, 171.12a or §176.11 of this subchapter without the approval of the Associate Administrator for Hazardous Materials Safety if the Associate Administrator for Hazardous Materials Safety has acknowledged, in writing, the acceptability of an approval issued by the competent authority of a foreign government pursuant to the provisions of the UN Recommendations, the ICAO Technical Instructions, the IMDG Code, or other national or international regulations based on the UN Recommendations. In such a case, a copy of the foreign competent authority approval, and a copy of the written acknowledgement of its acceptance must accompany each shipment of that explosive.

(h) The requirements of this section do not apply to cartridges, small arms which are:

(1) Not a forbidden explosive under §173.54 of this subchapter;

(2) Ammunition for rifle, pistol, or shotgun;

(3) Ammunition with inert projectile or blank ammunition; and

(4) Ammunition not exceeding 50 caliber for rifle or pistol cartridges or 8 gauge for shotgun shells.

Cartridges, small arms meeting the criteria of this paragraph (h) may be assigned a classification code of 1.4S by the manufacturer.

(i) If experience or other data indicate that the hazard of a material or a device containing an explosive composition is greater or less than indicated according to the definition and criteria specified in §§173.50, 173.56, and 173.58 of this subchapter, the Associate Administrator for Hazardous Materials Safety may, following examination in accordance with paragraph (b) of this section, revise its classification or except the material or device from the requirements of this subchapter.

(j) Fireworks. Notwithstanding the requirements of paragraph (b) of this section, Division 1.3 and 1.4 fireworks may be classed and approved by the Associate Administrator for Hazardous Materials Safety without prior examination and offered for transportation if the following conditions are met:

(1) The fireworks are manufactured in accordance with the applicable requirements in APA Standard 87–1;

(2) A thermal stability test is conducted on the device by the BOE, the BOM, or the manufacturer. The test must be performed by maintaining the device, or a representative prototype of a large device such as a display shell, at a temperature of 75 °C (167 °F) for 48 consecutive hours. When a device contains more than one component, those components which could be in physical contact with each other in the finished device must be placed in contact with each other during the thermal stability test; and

(3) The manufacturer applies in writing to the Associate Administrator for Hazardous Materials Safety following the applicable requirements in APA Standard 87–1, and is notified in writing by the Associate Administrator for Hazardous Materials Safety that the fireworks have been classed, approved, and assigned an EX-number. Each application must be complete, including all relevant background data and copies of all applicable drawings, test results, and any other pertinent information on each device for which approval is being requested. The manufacturer must sign the application and certify that the device for which approval is requested conforms to APA Standard 87–1 and that the descriptions and technical information contained in the application are complete and accurate. If the application is denied, the manufacturer will be notified in writing of the reasons for the denial. The Associate Administrator for Hazardous Materials Safety may require that the fireworks be examined by an agency listed in paragraph (b)(1) of this section.

[Amdt. 173–224, 55 FR 52617 Dec. 21, 1990, as amended at 56 FR 66267, Dec. 20, 1991; Amdt. 173–234, 58 FR 51532, Oct. 1, 1993; 62 FR 51560, Oct. 1, 1997]

§173.57 Acceptance criteria for new explosives.

(a) Unless otherwise excepted, an explosive substance must be subjected to the Drop Weight Impact Sensitivity Test (Test Method 3(a)(i)), the Friction Sensitivity Test (Test Method 3(b)(iii)),

the Thermal Stability Test (Test Method 3(c)) at 75 °C (167 °F) and the Small-Scale Burning Test (Test Method 3(d)(i)), each as described in the Explosive Test Manual (UN Recommendations on the Transport of Dangerous Goods, Tests and Criteria, Part I, Second Edition (see § 171.7 of this subchapter). A substance is forbidden for transportation if any one of the following occurs:

(1) For a liquid, failure to pass the test criteria when tested in the Drop Weight Impact Sensitivity Test apparatus for liquids;

(2) For a solid, failure to pass the test criteria when tested in the Drop Weight Impact Sensitivity Test apparatus for solids;

(3) The substance has a friction sensitiveness equal to or greater than that of dry pentaerythrite tetranitrate (PETN) when tested in the Friction Sensitivity Test;

(4) The substance fails to pass the test criteria specified in the Thermal Stability Test at 75 °C (167 °F); or

(5) Explosion occurs when tested in the Small-Scale Burning Test.

(b) An explosive article, packaged or unpackaged, or a packaged explosive substance must be subjected to the Thermal Stability Test for Articles and Packaged Articles (Test method 4(a)(i)) and the Twelve Meter Drop Test (Test Method 4(b)(ii)), when appropriate, in the Explosive Test Manual. An article or packaged substance is forbidden for transportation if evidence of thermal instability or excessive impact sensitivity is found in those tests according to the criteria and methods of assessing results prescribed therein.

(c) Dynamite (explosive, blasting, type A) is forbidden for transportation if any of the following occurs:

(1) It does not have uniformly mixed with the absorbent material a satisfactory antacid in a quantity sufficient to have the acid neutralizing power of an amount of magnesium carbonate equal to one percent of the nitroglycerin or other liquid explosive ingredient;

(2) During the centrifuge test (Test Method D–2, in appendix D to this part) or the compression test (Test Method D–3 in appendix D to this part), a non-gelatin dynamite loses more than 3 percent by weight of the liquid explosive or a gelatin dynamite loses more than 10 percent by weight of the liquid explosive; or

(3) During the leakage test (Test Method D–1 in appendix D to this part), there is any loss of liquid.

[Amdt. 173–224, 55 FR 52617 Dec. 21, 1990, as amended at 58 FR 51532, Oct. 1, 1993]

§ 173.58 Assignment of class and division for new explosives.

(a) Division 1.1., 1.2., 1.3., and 1.4 explosives. In addition to the test prescribed in § 173.57 of this subchapter, a substance or article in these divisions must be subjected to Test Methods 6(a), 6(b), and 6(c), as described in the Explosive Test Manual, for assignment to an appropriate division. The criteria for assignment of class and division are as follows:

(1) Division 1.1 if the major hazard is mass explosion;

(2) Division 1.2 if the major hazard is dangerous projections;

(3) Division 1.3 if the major hazard is radiant heat or violent burning, or both, but there is no blast or projection hazard;

(4) Division 1.4 if there is a small hazard with no mass explosion and no projection of fragments of appreciable size or range;

(5) Division 1.4 Compatibility Group S (1.4S) if the hazardous effects are confined within the package or the blast and projection effects do not significantly hinder emergency response efforts; or

(6) Not in the explosive class if the substance or article does not have significant explosive hazard or if the effects of explosion are completely confined within the article.

(b) Division 1.5 explosive. Except for ANFO, a substance that has been examined in accordance with the provisions § 173.57(a) of this subchapter, must be subjected to the following additional tests: Cap Sensitivity Test, Princess Incendiary Spark Test, DDT Test, and External Fire Test, each as described in the Explosive Test Manual. A material may not be classed as a Division 1.5 explosive if any of the following occurs:

(1) Detonation occurs in the Cap Sensitivity Test (Test Method 5(a));

(2) Detonation occurs in the DDT Test (Test Method 5(b)(ii));

(3) An explosion, evidenced by a loud noise and projection of fragments, occurs in the External Fire Test (Test Method 5(c), or

(4) Ignition or explosion occurs in the Princess Incendiary Spark Test (Test Method 5(d)).

(c) Division 1.6 explosive. (1) In order to be classed as a 1.6 explosive, an article must pass all of the following tests, as prescribed in the Explosive Test Manual:

(i) The 1.6 Article External Fire Test;

(ii) The 1.6 Article Slow Cook-off Test;

(iii) The 1.6 Article Propagation Test; and

(iv) The 1.6 Article Bullet Impact Test.

(2) A substance intended for use as the explosive load in an article of Division 1.6 must be an extremely insensitive detonating substance (EIDS). In order to determine if a substance is an EIDS, it must be subjected to the tests in paragraphs (c)(2)(i) through (c)(2)(x) of this section, which are described in the Explosive Test Manual. The substance must be tested in the form (i.e., composition, granulation, density, etc.) in which it is to be used in the article. A substance is not an EIDS if it fails any of the following tests:

(i) The Drop Weight Impact Sensitivity Test;

(ii) The Friction Sensitivity Test;

(iii) The Thermal Sensitivity Test at 75 °C (167 °F);

(iv) The Small Scale Burning Test;

(v) The EIDS Cap Test;

(vi) The EIDS Gap Test;

(vii) The Susan Test;

(viii) The EIDS Bullet Impact Test;

(ix) The EIDS External Fire Test; and

(x) The EIDS Slow Cook-off Test.

(d) The Associate Administrator for Hazardous Materials Safety may waive or modify certain test(s) identified in §§173.57 and 173.58 of this subchapter, or require additional testing, if appropriate. In addition, the Associate Administrator for Hazardous Materials Safety may limit the quantity of explosive in a device.

(e) Each explosive is assigned a compatibility group letter by the Associate Administrator for Hazardous Materials Safety based on the criteria prescribed in §173.52(b) of this subchapter.

[Amdt. 173–224, 55 FR 52617 Dec. 21, 1990, as amended at 56 FR 66267, Dec. 20, 1991]

§173.59 Description of terms for explosives.

For the purpose of this subchapter, a description of the following terms is provided for information only. They must not be used for purposes of classification or to replace proper shipping names prescribed in §172.101 of this subchapter.

Ammonium-nitrate—fuel oil mixture (ANFO). A blasting explosive containing no essential ingredients other than prilled ammonium nitrate and fuel oil.

Ammunition. Generic term related mainly to articles of military application consisting of all types of bombs, grenades, rockets, mines, projectiles and other similar devices or contrivances.

Ammunition, illuminating, with or without burster, expelling charge or propelling charge. Ammunition designed to produce a single source of intense light for lighting up an area. The term includes illuminating cartridges, grenades and projectiles, and illuminating and target identification bombs. The term excludes the following articles which are listed separately: *cartridges, signal; signal devices; hand signals; distress flares, aerial* and *flares, surface.*

Ammunition, incendiary. Ammunition containing an incendiary substance which may be a solid, liquid or gel including white phosphorus. Except when the composition is an explosive *per se,* it also contains one or more of the following: a propelling charge with primer and igniter charge, or a fuze with burster or expelling charge. The term includes: *Ammunition, incendiary,* liquid or gel, with burster, expelling charge or propelling charge; *Ammunition, incendiary* with or without burster, expelling charge or propelling charge; and *Ammunition, incendiary, white phosphorus,* with burster, expelling charge or propelling charge.

Ammunition, practice. Ammunition without a main bursting charge, containing a burster or expelling charge. Normally it also contains a fuze and propelling charge. The term excludes

the following article which is listed separately: *Grenades, practice.*

Ammunition, proof. Ammunition containing pyrotechnic substance, used to test the performance or strength of new ammunition, weapon component or assemblies.

Ammunition, smoke. Ammunition containing a smoke-producing substance such as chlorosulphonic acid mixture (CSAM), titanium tetrachloride (FM), white phosphorus, or smoke-producing substance whose composition is based on hexachlorothannol (HC) or red phosphorus. Except when the substance is an explosive *per se,* the ammunition also contains one or more of the following: a propelling charge with primer and igniter charge, or a fuze with burster or expelling charge. The term includes: *Ammunition, smoke,* with or without burster, expelling charge or propelling charge; *Ammunition, smoke, white phosphorus* with burster, expelling charge or propelling charge.

Ammunition, tear-producing with burster, expelling charge or propelling charge. Ammunition containing tear-producing substance. It may also contain one or more of the following: a pyrotechnic substance, a propelling charge with primer and igniter charge, or a fuze with burster or expelling charge.

Ammunition, toxic. Ammunition containing toxic agent. It may also contain one or more of the following: a pyrotechnic substance, a propelling charge with primer and igniter charge, or a fuze with burster or expelling charge.

Articles, explosive, extremely insensitive (Articles, EEI). Articles that contain only extremely insensitive detonating substances and which demonstrate a negligible probability of accidental initiation or propagation under normal conditions of transport and which have passed Test Series 7.

Articles, pyrophoric. Articles which contain a pyrophoric substance (capable of spontaneous ignition when exposed to air) and an explosive substance or component. The term excludes articles containing white phosphorus.

Articles, pyrotechnic for technical purposes. Articles which contain pyrotechnic substances and are used for technical purposes, such as heat generation, gas generation, theatrical effects, etc. The term excludes the following articles which are listed separately: all ammunition; *cartridges, signal; cutters, cable, explosive; fireworks; flares, aerial; flares, surface; release devices, explosives; rivets, explosive; signal devices, hand; signals, distress; signals, railway track, explosive*; and *signals, smoke.*

Black powder (gunpowder). Substance consisting of an intimate mixture of charcoal or other carbon and either potassium or sodium nitrate, and sulphur. It may be meal, granular, compressed, or pelletized.

Bombs. Explosive articles which are dropped from aircraft. They may contain a flammable liquid with bursting charge, a photo-flash composition or bursting charge. The term excludes *torpedoes* (aerial) and includes *bombs, photo-flash; bombs* with bursting charge; *bombs with flammable liquids,* with bursting charge.

Boosters. Articles consisting of a charge of detonating explosive without means of initiation. They are used to increase the initiating power of detonators or detonating cord.

Bursters, explosive. Articles consisting of a small charge of explosive to open projectiles or other ammunition in order to disperse their contents.

Cartridges, blank. Articles which consist of a cartridge case with a center or rim fire primer and a confined charge of smokeless or black powder, but no projectile. Used in training, saluting, or in starter pistols, etc.

Cartridges, flash. Articles consisting of a casing, a primer and flash powder, all assembled in one piece for firing.

Cartridges for weapons. (1) Fixed (assembled) or semi-fixed (partially assembled) ammunition designed to be fired from weapons. Each cartridge includes all the components necessary to function the weapon once. The name and description should be used for military small arms cartridges that cannot be described as cartridges, small arms. Separate loading ammunition is included under this name and description when the propelling charge and projectile are packed together (see also Cartridges, blank).

(2) Incendiary, smoke, toxic, and tear-producing cartridges are described under *ammunition, incendiary,* etc.

Cartridges for weapons, inert projectile. Ammunition consisting of a casing with propelling charge and a solid or empty projectile.

Cartridges, oil well. Articles consisting of a casing of thin fiber, metal or other material containing only propellant explosive. The term excludes charges, shaped, commercial.

Cartridges, power device. Articles designed to accomplish mechanical actions. They consist of a casing with a charge of deflagrating explosive and a means of ignition. The gaseous products of the deflagration produce inflation, linear or rotary motion; activate diaphragms, valves or switches, or project fastening devices or extinguishing agents.

Cartridges, signal. Articles designed to fire colored flares or other signals from signal pistols or devices.

Cartridges, small arms. Ammunition consisting of a cartridge case fitted with a center or rim fire primer and containing both a propelling charge and solid projectile(s). They are designed to be fired in weapons of caliber not larger than 19.1 mm. Shotgun cartridges of any caliber are included in this description. The term excludes: Cartridges, small arms, blank, and some military small arms cartridges listed under *Cartridges for weapons, inert projectile.*

Cases, cartridge, empty with primer. Articles consisting of a cartridge case made from metal, plastics or other non-flammable materials, in which only the explosive component is the primer.

Cases, combustible, empty, without primer. Articles consisting of cartridge cases made partly or entirely from nitrocellulose.

Charges, bursting. Articles consisting of a charge of detonating explosive such as hexolite, octolite, or plastics-bonded explosive designed to produce effect by blast or fragmentation.

Charges, demolition. Articles consisting of a charge of detonating explosive in a casing of fiberboard, plastics, metal or other material. The term excludes articles identified as bombs, mines, etc.

Charges, depth. Articles consisting of a charge of detonating explosive contained in a drum or projectile. They are designed to detonate under water.

Charges, expelling. A charge of deflagrating explosive designed to eject the payload from the parent article without damage.

Charges, explosive, commercial without detonator. Articles consisting of a charge of detonating explosive without means of initiation, used for explosive welding, joining, forming, and other commercial processes.

Charges, propelling. Articles consisting of propellant charge in any physical form, with or without a casing, for use in cannon or for reducing drag for projectiles or as a component of rocket motors.

Charges, propelling for cannon. Articles consisting of a propellant charge in any physical form, with or without a casing, for use in a cannon.

Charges, shaped commercial, without detonator. Articles consisting of a casing containing a charge of detonating explosive with a cavity lined with rigid material, without means of initiation. They are designed to produce a powerful, penetrating jet effect.

Charges, shaped, flexible, linear. Articles consisting of a V-shaped core of a detonating explosive clad by a flexible metal sheath.

Charges, supplementary, explosive. Articles consisting of a small removable booster used in the cavity of a projectile between the fuze and the bursting charge.

Components, explosive train, n.o.s. Articles containing an explosive designed to transmit a detonation or deflagration within an explosive train.

Contrivance, water-activated with burster, expelling charge or propelling charge. Articles whose functioning depends of physico-chemical reaction of their contents with water.

Cord, detonating, flexible. Articles consisting of a core of detonating explosive enclosed in spun fabric with plastics or other covering.

Cord (fuse) detonating, metal clad. Articles consisting of a core of detonating explosive clad by a soft metal tube with or without protective covering. When the core contains a sufficiently

small quantity of explosive, the words ''mild effect'' are added.

Cord igniter. Articles consisting of textile yarns covered with black powder or another fast-burning pyrotechnic composition and a flexible protective covering, or consisting of a core of black powder surrounded by a flexible woven fabric. It burns progressively along its length with an external flame and is used to transmit ignition from a device to a charge or primer.

Cutters, cable, explosive. Articles consisting of a knife-edged device which is driven by a small charge of deflagrating explosive into an anvil.

Detonator assemblies, non-electric, for blasting. Non-electric detonators assembled with and activated by such means as safety fuse, shock tube, flash tube, or detonating cord. They may be of instantaneous design or incorporate delay elements. Detonating relays incorporating detonating cord are included. Other detonating relays are included in Detonators, nonelectric.

Detonators. Articles consisting of a small metal or plastic tube containing explosives such as lead azide, PETN, or combinations of explosives. They are designed to start a detonation train. They may be constructed to detonate instantaneously, or may contain a delay element. They may contain no more than 10 g of total explosives weight, excluding ignition and delay charges, per unit. The term includes: detonators for ammunition; detonators for blasting, both electric and non-electric; and detonating relays without flexible detonating cord.

Dynamite. A detonating explosive containing a liquid explosive ingredient (generally nitroglycerin, similar organic nitrate esters, or both) that is uniformly mixed with an absorbent material, such as wood pulp, and usually contains materials such as nitrocellulose, sodium and ammonium nitrate.

Entire load and total contents. The phrase means such a substantial portion of the material explodes that the practical hazard should be assessed by assuming simultaneous explosion of the whole of the explosive content of the load or package.

Explode. The term indicates those explosive effects capable of endangering life and property through blast, heat, and projection of missiles. It encompasses both deflagration and detonation.

Explosion of the total contents. The phrase is used in testing a single article or package or a small stack of articles or packages.

Explosive, blasting. Detonating explosive substances used in mining, construction, and similar tasks. Blasting explosives are assigned to one of five types. In addition to the ingredients listed below for each type, blasting explosives may also contain inert components, such as kieselguhr, and other minor ingredients, such as coloring agents and stabilizers.

Explosive, blasting, type A. Substances consisting of liquid organic nitrates, such as nitroglycerin, or a mixture of such ingredients with one or more of the following: nitrocellulose, ammonium nitrate or other inorganic nitrates, aromatic nitro-derivatives, or combustible materials, such as wood-meal and aluminum powder. Such explosives must be in powdery, gelatinous, plastic or elastic form. The term includes dynamite, blasting gelatine and gelatine dynamites.

Explosive, blasting, type B. Substances consisting of a mixture of ammonium nitrate or other inorganic nitrates with an explosive, such as trinitrotoluene, with or without other substances, such as wood-meal or aluminum powder, or a mixture of ammonium nitrate or other inorganic nitrates with other combustible substances which are not explosive ingredients. Such explosives may not contain nitroglycerin, similar liquid organic nitrates, or chlorates.

Explosive, blasting, type C. Substances consisting of a mixture of either potassium or sodium chlorate or potassium, sodium or ammonium perchlorate with organic nitro-derivatives or combustible materials, such as wood-meal or aluminum powder, or a hydrocarbon. Such explosives must not contain nitroglycerin or any similar liquid organic nitrate.

Explosive, blasting, type D. Substances consisting of a mixture of organic nitrate compounds and combustible materials, such as hydrocarbons and aluminum powder. Such explosives must

not contain nitroglycerin, any similar liquid organic nitrate, chlorate or ammonium-nitrate. The term generally includes plastic explosives.

Explosive, blasting, type E. Substances consisting of water as an essential ingredient and high proportions of ammonium nitrate or other oxidizer, some or all of which are in solution. The other constituents may include nitroderivatives, such as trinitrotoluene, hydrocarbons or aluminum powder. The term includes: explosives, emulsion; explosives, slurry; and explosives, watergel.

Explosive, deflagrating. A substance, e.g., propellant, which reacts by deflagration rather than detonation when ignited and used in its normal manner.

Explosive, detonating. A substance which reacts by detonation rather than deflagration when initiated and used in its normal manner.

Explosive, extremely insensitive detonating substance (EIDS). A substance which, although capable of sustaining a detonation, has demonstrated through tests that it is so insensitive that there is very little probability of accidental initiation.

Explosive, primary. Explosive substance which is manufactured with a view to producing a practical effect by explosion, is very sensitive to heat, impact, or friction, and even in very small quantities, detonates. The major primary explosives are mercury fulminate, lead azide, and lead styphnate.

Explosive, secondary. An explosive substance which is relatively insensitive (when compared to primary explosives) and is usually initiated by primary explosives with or without the aid of boosters or supplementary charges. Such an explosive may react as a deflagrating or as a detonating explosive.

Fireworks. Pyrotechnic articles designed for entertainment.

Flares. Articles containing pyrotechnic substances which are designed to illuminate, identify, signal, or warn. The term includes: flares, aerial and flares, surface.

Flash powder. Pyrotechnic substance which, when ignited, produces an intense light.

Fracturing devices, explosive, for oil wells, without detonators. Articles consisting of a charge of detonating explosive contained in a casing without the means of initiation. They are used to fracture the rock around a drill shaft to assist the flow of crude oil from the rock.

Fuse/Fuze. Although these two words have a common origin (French fusee, fusil) and are sometimes considered to be different spellings, it is useful to maintain the convention that fuse refers to a cord-like igniting device, whereas fuze refers to a device used in ammunition which incorporates mechanical, electrical, chemical, or hydrostatic components to initiate a train by deflagration or detonation.

Fuse, igniter. Articles consisting of a metal tube with a core of deflagrating explosives.

Fuse, instantaneous, non–detonating (Quickmatch). Article consisting of cotton yarns impregnated with fine black powder. It burns with an external flame and is used in ignition trains for fireworks, etc.

Fuse, safety. Article consisting of a core of fine-grained black powder surrounded by a flexible woven fabric with one or more protective outer coverings. When ignited, it burns at a predetermined rate without any explosive effect.

Fuzes. Articles designed to start a detonation or deflagration in ammunition. They incorporate mechanical, electrical, chemical, or hydrostatic components and generally protective features. The term includes: Fuzes, detonating; fuzes detonating with protective features; and fuzes igniting.

Grenades, hand or rifle. Articles which are designed to be thrown by hand or to be projected by rifle. The term includes: grenades, hand or rifle, with bursting charge; and grenades, practice, hand or rifle. The term excludes: grenades, smoke.

Igniters. Articles containing one or more explosive substance used to start deflagration of an explosive train. They may be actuated chemically, electrically, or mechanically. The term excludes: cord, igniter; fuse, igniter; fuse, instantaneous, non-detonating; fuze, igniting; lighters, fuse, instantaneous, non-detonating; fuzes, igniting; lighters, fuse; primers, cap type; and primers, tubular.

Ignition, means of. A general term used in connection with the method employed to ignite a deflagrating train of explosive or pyrotechnic substances (for example: a primer for propelling charge, an igniter for a rocket motor or an igniting fuze).

Initiation, means of. (1) A device intended to cause the detonation of an explosive (for example: detonator, detonator for ammunition, or detonating fuze).

(2) The term *with its own means of initiation* means that the contrivance has its normal initiating device assembled to it and this device is considered to present a significant risk during transport but not one great enough to be unacceptable. The term does not apply, however, to a contrivance packed together with its means of initiation, provided the device is packaged so as to eliminate the risk of causing detonation of the contrivance in the event of functioning of the initiating device. The initiating device can even be assembled in the contrivance provided there are protective features ensuring that the device is very unlikely to cause detonation of the contrivance under conditions which are associated with transport.

(3) For the purposes of classification, any means of initiation without two effective protective features should be regarded as Compatibility Group B; an article with its own means of initiation, without two effective protective features, is Compatibility Group F. A means of initiation which itself possesses two effective protective features is Compatibility Group D, and an article with its own means of initiation which possesses two effective features is Compatibility Group D or E. A means of initiation, adjudged as having two effective protective features, must be approved by the Associate Administrator for Hazardous Materials Safety. A common and effective way of achieving the necessary degree of protection is to use a means of initiation which incorporates two or more independent safety features.

Jet perforating guns, charged, oil well, without detonator. Articles consisting of a steel tube or metallic strip, into which are inserted shaped charges connected by detonating cord, without means of initiation.

Lighters, fuse. Articles of various design actuated by friction, percussion, or electricity and used to ignite safety fuse.

Mass explosion. Explosion which affects almost the entire load virtually instantaneously.

Mines. Articles consisting normally of metal or composition receptacles and bursting charge. They are designed to be operated by the passage of ships, vehicles, or personnel. The term includes Bangalore torpedoes.

Powder cake (powder paste). Substance consisting of nitrocellulose impregnated with not more than 60 percent of nitroglycerin or other liquid organic nitrates or a mixture of these.

Powder, smokeless. Substance based on nitrocellulose used as propellant. The term includes propellants with a single base (nitrocellulose (NC) alone), those with a double base (such as NC and nitroglycerin (NG)) and those with a triple base (such as NC/NG/nitroguanidine). Cast pressed or bag-charges of smokeless powder are listed under *charges, propelling* and *charges, propelling for cannon.*

Primers, cap type. Articles consisting of a metal or plastic cap containing a small amount of primary explosive mixture that is readily ignited by impact. They serve as igniting elements in small arms cartridges and in percussion primers for propelling charges.

Primers, tubular. Articles consisting of a primer for ignition and an auxiliary charge of deflagrating explosive, such as black powder, used to ignite the propelling charge in a cartridge case for cannon, etc.

Projectiles. Articles, such as a shell or bullet, which are projected from a cannon or other artillery gun, rifle, or other small arm. They may be inert, with or without tracer, or may contain a burster, expelling charge or bursting charge. The term includes: projectiles, inert, with tracer; projectiles, with burster or expelling charge; and projectiles, with bursting charge.

Propellant, liquid. Substances consisting of a deflagrating liquid explosive, used for propulsion.

Propellant, solid. Substances consisting of a deflagrating solid explosive, used for propulsion.

Propellants. Deflagrating explosives used for propulsion or for reducing the drag of projectiles.

Release devices, explosive. Articles consisting of a small charge of explosive with means of initiation. They sever rods or links to release equipment quickly.

Rocket motors. Articles consisting of a solid, liquid, or hypergolic propellant contained in a cylinder fitted with one or more nozzles. They are designed to propel a rocket or guided missile. The term includes: rocket motors; rocket motors with hypergolic liquids with or without an expelling charge; and rocket motors, liquid fuelled.

Rockets. Articles containing a rocket motor and a payload which may be an explosive warhead or other device. The term includes: guided missiles; rockets, line-throwing; rockets, liquid fuelled, with bursting charge; rockets, with bursting charge; rockets, with expelling charge; and rockets, with inert head.

Signals. Articles consisting of pyrotechnic substances designed to produce signals by means of sound, flame, or smoke or any combination thereof. The term includes: signal devices, hand; signals, distress ship; signals, railway track, explosive; signals, smoke.

Sounding devices, explosive. Articles consisting of a charge of detonating explosive. They are dropped from ships and function when they reach a predetermined depth or the sea bed.

Substance, explosive, very insensitive (Substance, EVI) N.O.S. Substances which present a mass explosive hazard but which are so insensitive that there is very little probability of initiation, or of transition from burning to detonation under normal conditions of transport and which have passed test series 5.

Torpedoes. Articles containing an explosive or non-explosive propulsion system and designed to be propelled through water. They may contain an inert head or warhead. The term includes: torpedoes, liquid fuelled, with inert head; torpedoes, liquid fuelled, with or without bursting charge; and torpedoes, with bursting charge.

Tracers for ammunition. Sealed articles containing pyrotechnic substances, designed to reveal the trajectory of a projectile.

Warheads. Articles containing detonating explosives, designed to be fitted to a rocket, guided missile, or torpedo. They may contain a burster or expelling charge or bursting charge. The term includes: warhead rocket with bursting charge; and warheads, torpedo, with bursting charge.

[Amdt. 173–224, 55 FR 52617 Dec. 21, 1990, as amended at 56 FR 66267, Dec. 20, 1991; Amdt. 173–241, 59 FR 67492, Dec. 29, 1994]

§173.60 General packaging requirements for explosives.

(a) Unless otherwise provided in this subpart and in §173.7(a), packaging used for Class 1 (explosives) materials must meet Packing Group II requirements. Each packaging used for an explosive must be capable of meeting the test requirements of subpart M of part 178 of this subchapter, at the specified level of performance, and the applicable general packaging requirements of paragraph (b) of this section.

(b) The general requirements for packaging of explosives are as follows:

(1) Nails, staples, and other closure devices, made of metal, having no protective covering may not penetrate to the inside of the outer packaging unless the inner packaging adequately protects the explosive against contact with the metal.

(2) The closure device of containers for liquid explosives must provide double protection against leakage, such as a screw cap secured in place with tape.

(3) Inner packagings, fittings, and cushioning materials, and the placing of explosive substances or articles in packages, must be such that the explosive substance is prevented from becoming loose in the outer packaging during transportation. Metallic components of articles must be prevented from making contact with metal packagings. Articles containing explosive substances not enclosed in an outer casing must be separated from each other in order to prevent friction and impact. Padding, trays, partitioning in the inner or outer packaging, molded plastics or receptacles may be used for this purpose.

(4) When the packaging includes water that could freeze during transportation, a sufficient amount of anti-freeze, such as denatured ethyl alcohol, must be added to the water to prevent freezing. If the anti-freeze creates a fire hazard, it may not be used. When a percentage of water in the substance is specified, the combined weight of water and anti-freeze may be substituted.

(5) If an article is fitted with its own means of ignition or initiation, it must be effectively protected from accidental actuation during normal conditions of transportation.

(6) The entry of explosive substances into the recesses of double-seamed metal packagings must be prevented.

(7) The closure device of a metal drum must include a suitable gasket; if the closure device includes metal-to-metal screw-threads, the ingress of explosive substances into the threading must be prevented.

(8) Whenever loose explosive substances or the explosive substance of an uncased or partly cased article may come into contact with the inner surface of metal packagings (1A2, 1B2, 4A, 4B and metal receptacles), the metal packaging should be provided with an inner liner or coating.

(9) Packagings must be made of materials compatible with, and impermeable to, the explosives contained in the package, so that neither interaction between the explosives and the packaging materials, nor leakage, causes the explosive to become unsafe in transportation, or the hazard division or compatibility group to change (*see* § 173.24(e)(2)).

(10) An explosive article containing an electrical means of initiation that is sensitive to external electromagnetic radiation, must have its means of initiation effectively protected from electromagnetic radiation sources (for example, radar or radio transmitters) through either design of the packaging or of the article, or both.

(11) Plastic packagings may not be able to generate or accumulate sufficient static electricity to cause the packaged explosive substances or articles to initiate, ignite or inadvertently function. Metal packagings must be compatible with the explosive substance they contain.

(12) Explosive substances may not be packed in inner or outer packagings where the differences in internal and external pressures, due to thermal or other effects, could cause an explosion or rupture of the package.

(13) Packagings for water soluble substances must be water resistant. Packagings for desensitized or phlegmatized substances must be closed to prevent changes in concentration during transport. When containing less alcohol, water, or phlegmatizer than specified in its proper shipping description, the substance is a ''forbidden'' material.

[Amdt. 173–260, 62 FR 24719, May 6, 1997]

§ 173.61 Mixed packaging requirements.

(a) Unless specifically authorized in this subchapter, an explosive may not be packed in the same outside packaging with any other material, unless packaged by the DOD or DOE in accordance with § 173.7(a) of this subchapter.

(b) Hardware necessary for assembly of explosive articles at the point-of-use may be packed in the same outside packaging with the explosive articles. The hardware must be securely packed in a separate inside packaging. Sufficient cushioning materials must be used to ensure that all inside packagings are securely packed in the outside packaging.

(c) The following explosives may not be packed together with other Class 1 explosives: UN 0029, UN 0030, UN 0073, UN 0106, UN 0107, UN 0255, UN 0257, UN 0267, UN 0360, UN 0361, UN 0364, UN 0365, UN 0366, UN 0367, UN 0408, UN 0409, UN 0410, UN 0455, UN 0456, and NA 0350. These explosives may be mix-packed with each other in accordance with the compatibility requirements prescribed in paragraph (e).

(d) Division 1.1 and 1.2 explosives may not be packed with the following explosives: UN 0333, UN 0334, UN 0335, UN 0336, and UN 0337.

(e) Except as prescribed in paragraphs (c) and (d) of this section, different explosives may be packed in one outside packaging in accordance with

the following compatibility requirements:

(1) Explosives of the same compatibility group and same division number may be packed together.

(2) Explosives of the same compatibility group or authorized combination of compatibility group but different division number may be packed together, provided that the whole package is treated as though its entire contents were comprised of the lower division number. For example, a mixed package of Division 1.2 explosives (Class A explosive) and Division 1.4 explosives (Class C explosive), compatibility group D, must be treated as 1.2D explosives. However, when 1.5D explosives (blasting agents) are packed together with 1.2D explosives (Class A explosives), the whole package must be treated as 1.1D explosives.

(3) Explosives of compatibility group S may be packed with explosives of all other compatibility group except A and L.

(4) Explosives of compatibility group L shall only be packed with an identical explosive.

(5) Explosives articles of compatibility groups C, D, or E may be packed together and the entire package shall be treated as belonging to compatibility group E.

(6) Explosives articles of compatibility groups C, D, E, or N may be packed together and the entire package shall be treated as belonging to compatibility group D.

(7) Explosives substances of compatibility groups C and D may be packaged together and the entire package shall be treated as belonging to compatibility group D.

[Amdt. 173–224, 55 FR 52617 Dec. 21, 1990, as amended at 56 FR 66267, Dec. 20, 1991]

§173.62 Specific packaging requirements for explosives.

(a) Except as provided in paragraph (e) of this section, when the §172.101 Table specifies that an explosive must be packaged in accordance with this section, only non-bulk packagings which conform to the provisions of paragraphs (b), (c) and (d) of this section and the applicable requirements in §§173.60 and 173.61 may be used unless otherwise approved by the Associate Administrator. Intermediate bulk packagings may be used for explosives assigned to Packing Instruction 117 in paragraph (b) of this section. Intermediate bulk packagings must conform with the requirements of this subchapter.

(b) Explosives Table. The Explosives Table specifies the Packing Instructions assigned to each explosive. Explosives are identified in the first column in numerical sequence by their identification number (ID #), which is listed in column 4 of the §172.101 Table, of this subchapter. The second column of the Explosives Table specifies the Packing Instruction (PI) which must be used for packaging the explosive. The Explosives Packing Method Table in paragraph (c) of this section defines the methods of packaging. The Packing Instructions are identified using a 3 digit designation. The Packing Instruction prefixed by the letters ''US'' is particular to the United States and not found in applicable international regulations.

EXPLOSIVES TABLE

ID#	PI
UN0004	112
UN0005	130
UN0006	130
UN0007	130
UN0009	130
UN0010	130
UN0012	130
UN0014	130
UN0015	130
UN0016	130
UN0018	130
UN0019	130
UN0020	101
UN0021	101
UN0027	113
UN0028	113
UN0029	131
UN0030	131
UN0033	130
UN0034	130
UN0035	130
UN0037	130
UN0038	130
UN0039	130
UN0042	132
UN0043	133
UN0044	133
UN0048	130
UN0049	135
UN0050	135
UN0054	135
UN0055	136
UN0056	130
UN0059	137
UN0060	132
UN0065	139

EXPLOSIVES TABLE—Continued

ID#	PI
UN0066	140
UN0070	134
UN0072	112(a)
UN0073	133
UN0074	110(a) or 110(b)
UN0075	115
UN0076	112
UN0077	114(a) or 114(b)
UN0078	112
UN0079	112(b) or 112(c)
UN0081	116
UN0082	116 or 117
UN0083	116
UN0084	116
UN0092	135
UN0093	135
UN0094	113
UN0099	134
UN0101	140
UN0102	139
UN0103	140
UN0104	139
UN0105	140
UN0106	141
UN0107	141
UN0110	141
UN0113	110(a) or 110(b)
UN0114	110(a) or 110(b)
UN0118	112
UN0121	142
UN0124	US1
UN0129	110(a) or 110(b)
UN0130	110(a) or 110(b)
UN0131	142
UN0132	114(b)
UN0133	112(a)
UN0135	110(a) or 110(b)
UN0136	130
UN0137	130
UN0138	130
UN0143	115
UN0144	115
UN0146	112
UN0147	112(b)
UN0150	112(a) or 112(b)
UN0151	112
UN0153	112(b) or 112(c)
UN0154	112
UN0155	112(b) or 112(c)
UN0159	111
UN0160	114(b)
UN0161	114(b)
UN0167	130
UN0168	130
UN0169	130
UN0171	130
UN0173	134
UN0174	134
UN0180	130
UN0181	130
UN0182	130
UN0183	130
UN0186	130
UN0190	101
UN0191	135
UN0192	135
UN0193	135
UN0194	135
UN0195	135
UN0196	135
UN0197	135
UN0204	134

EXPLOSIVES TABLE—Continued

ID#	PI
UN0207	112(b) or 112(c)
UN0208	112(b) or 112(c)
UN0209	112
UN0212	133
UN0213	112(b) or 112(c)
UN0214	112
UN0215	112
UN0216	112(b) or 112(c)
UN0217	112(b) or 112(c)
UN0218	112(b) or 112(c)
UN0219	112
UN0220	112
UN0221	130
UN0222	112(b) or 112(c)
UN0224	110(a) or 110(b)
UN0225	133
UN0226	112(a)
UN0234	114(a) or 114(b)
UN0235	114(a) or 114(b)
UN0236	114(a) or 114(b)
UN0237	138
UN0238	130
UN0240	130
UN0241	116 or 117
UN0242	130
UN0243	130
UN0244	130
UN0245	130
UN0246	130
UN0247	101
UN0248	144
UN0249	144
UN0250	101
UN0254	130
UN0255	131
UN0257	141
UN0266	112
UN0267	131
UN0268	133
UN0271	143
UN0272	143
UN0275	134
UN0276	134
UN0277	134
UN0278	134
UN0279	130
UN0280	130
UN0281	130
UN0282	112
UN0283	132
UN0284	141
UN0285	141
UN0286	130
UN0287	130
UN0288	138
UN0289	139
UN0290	139
UN0291	130
UN0292	141
UN0293	141
UN0294	130
UN0295	130
UN0296	134
UN0297	130
UN0299	130
UN0300	130
UN0301	130
UN0303	130
UN0305	113
UN0306	133
UN0312	135
UN0313	135

EXPLOSIVES TABLE—Continued

ID#	PI
UN0314	142
UN0315	142
UN0316	141
UN0317	141
UN0318	141
UN0319	133
UN0320	133
UN0321	130
UN0322	101
UN0323	134
UN0324	130
UN0325	142
UN0326	130
UN0327	130
UN0328	130
UN0329	130
UN0330	130
UN0331	116 or 117
UN0332	116 or 117
UN0333	135
UN0334	135
UN0335	135
UN0336	135
UN0337	135
UN0338	130
UN0339	130
UN0340	112(a) or 112(b)
UN0341	112(b)
UN0342	114(a)
UN0343	111
UN0344	130
UN0345	130
UN0346	130
UN0347	130
UN0348	130
UN0349	101
UN0350	101
UN0351	101
UN0352	101
UN0353	101
UN0354	101
UN0355	101
UN0356	101
UN0357	101
UN0358	101
UN0359	101
UN0360	131
UN0361	131
UN0362	130
UN0363	130
UN0364	133
UN0365	133
UN0366	133
UN0367	141
UN0368	141
UN0369	130
UN0370	130
UN0371	130
UN0372	141
UN0373	135
UN0374	134
UN0375	134
UN0376	133
UN0377	133
UN0378	133
UN0379	136
UN0380	101
UN0381	134
UN0382	101
UN0383	101
UN0384	101
UN0385	112(b) or 112(c)

EXPLOSIVES TABLE—Continued

ID#	PI
UN0386	112(b) or 112(c)
UN0387	112(b) or 112(c)
UN0388	112(b) or 112(c)
UN0389	112(b) or 112(c)
UN0390	112(b) or 112(c)
UN0391	112(a)
UN0392	112(b) or 112(c)
UN0393	112(b)
UN0394	112(a)
UN0395	101
UN0396	101
UN0397	101
UN0398	101
UN0399	101
UN0400	101
UN0401	112
UN0402	112(b) or 112(c)
UN0403	135
UN0404	135
UN0405	135
UN0406	114(b)
UN0407	114(b)
UN0408	141
UN0409	141
UN0410	141
UN0411	112(b) or 112(c)
UN0412	130
UN0413	130
UN0414	130
UN0415	143
UN0417	130
UN0418	135
UN0419	135
UN0420	135
UN0421	135
UN0424	130
UN0425	130
UN0426	130
UN0427	130
UN0428	135
UN0429	135
UN0430	135
UN0431	135
UN0432	135
UN0433	111
UN0434	130
UN0435	130
UN0436	130
UN0437	130
UN0438	130
UN0439	137
UN0440	137
UN0441	137
UN0442	137
UN0443	137
UN0444	137
UN0445	137
UN0446	136
UN0447	136
UN0448	114(b)
UN0449	101
UN0450	101
UN0451	130
UN0452	141
UN0453	130
UN0454	142
UN0455	131
UN0456	131
UN0457	130
UN0458	130
UN0459	130
UN0460	130

EXPLOSIVES TABLE—Continued

ID#	PI
UN0461	101
UN0462	101
UN0463	101
UN0464	101
UN0465	101
UN0466	101
UN0467	101
UN0468	101
UN0469	101
UN0470	101
UN0471	101
UN0472	101
UN0473	101
UN0474	101
UN0475	101
UN0476	101
UN0477	101
UN0478	101
UN0479	101
UN0480	101
UN0481	101
UN0482	101
UN0483	112(b) or 112(c)
UN0484	112(b) or 112(c)
UN0486	101
UN0487	135
UN0488	130
UN0489	112(b) or 112(c)
UN0490	112(b) or 112(c)
UN0491	143
UN0492	135
UN0493	135
UN0494	US1
UN0495	115
UN0496	112(b) or 112(c)
UN0497	115
UN0498	114(b)
UN0499	114(b)
UN0500	131
NA0124	US1
NA0276	134
NA0323	134
NA0331	116 or 117
NA0337	135
NA0349	133
NA0494	US1

(c) Explosives Packing Instruction Table. Explosives must be packaged in accordance with the following table:

(1) The first column lists, in alphanumeric sequence, the packing methods prescribed for explosives in the Explosives Table of paragraph (b) of this section.

(2) The second column specifies the inner packagings that are required. If inner packagings are not required, a notation of ''Not necessary'' appears in the column. The term ''Not necessary'' means that a suitable inner packaging may be used but is not required.

(3) The third column specifies the intermediate packagings that are required. If intermediate packagings are not required, a notation of ''Not necessary'' appears in the column. The term ''Not necessary'' means that a suitable intermediate packaging may be used but is not required.

(4) The fourth column specifies the outer packagings which are required. If inner packagings and/or intermediate packagings are specified in the second and third columns, then the packaging specified in the fourth column must be used as the outer packaging of a combination packaging; otherwise it may be used as a single packaging.

(5) Packing Instruction 101 may be used for any explosive substance or article if an equivalent level of safety is shown to be maintained subject to the approval of the Associate Administrator for Hazardous Materials Safety.

TABLE OF PACKING METHODS

Packing instruction	Inner packagings	Intermediate packagings	Outer packagings
101	This Packing Instruction may be used as an alternative to a specifically assigned packing method with the approval of the Associate Administrator for Hazardous Materials Safety prior to transportation. When this packing instruction is used, the following must be marked on the shipping documents: "Packaging approved by the competent authority of the United States of America (USA)".		
PARTICULAR PACKING REQUIREMENTS OR EXCEPTIONS: 1. Samples of new or existing explosive substances or articles may be transported as directed by the Associate Administrator for Hazardous Materials Safety for purposes including: testing, classification, research and development, quality control, or as a commercial sample. Explosive samples which are wetted or desensitized must be limited to 25 kg. Explosive samples which are not wetted or desensitized must be limited to 10 kg in small packages as specified by the Associate Administrator for Hazardous Materials Safety			
110(a)	Bags plastics textile, plastic coated or lined rubber textile, rubberized textile	Bags plastics textile, plastic coated or lined rubber textile, rubberized Receptacles plastics metal	Drums. steel, removable head (1A2). plastics, removable head (1H2)
PARTICULAR PACKING REQUIREMENTS OR EXCEPTIONS: 1. The Intermediate packagings must be filled with water saturated material such as an anti-freeze solution or wetted cushioning 2. Outer packagings must be filled with water saturated material such as an anti-freeze solution or wetted cushioning. Outer packagings must be constructed and sealed to prevent evaporation of the wetting solution, except when 0224 is being carried dry			
110(b)	Bags rubber, conductive plastics, conductive Receptacles metal wood rubber, conductive plastics, conductive	Dividing partitions metal wood plastics fibreboard	Boxes. natural wood, sift-proof wall (4C2). plywood (4D). reconstituted wood (4F).
PARTICULAR PACKING REQUIREMENTS OR EXCEPTIONS For UN 0074, 0113, 0114, 0129, 0130, 0135 and 0224, the following conditions must be satisfied: a. inner packagings must not contain more than 50 g of explosive substance (quantity corresponding to dry substance); b. each inner packaging must be separated from other inner packagings by dividing partitions; and c. the outer packaging must not be partitioned with more than 25 compartments			

TABLE OF PACKING METHODS—Continued

Packing instruction	Inner packagings	Intermediate packagings	Outer packagings
111 PARTICULAR PACKING REQUIREMENTS OR EXCEPTIONS: For UN 0159, inner packagings are not required when metal (1A2 or 1B2) or plastics (1H2) drums are used as outer packagings.	Bags paper, waterproofed plastics textile, rubberized Sheets plastics textile, rubberized	Not necessary	Boxes. steel (4A). aluminium (4B). natural wood, ordinary (4C1). natural wood, sift proof (4C2). plywood (4D). reconstituted wood (4F). fibreboard (4G). plastics, expanded (4H1). plastics, solid (4H2). Drums steel, removable head (1A2). aluminum, removable head (1B2). plywood (1D). fibreboard (1G). plastics, removable head (1H2).
112(a) This packing instruction applies to wetted solids PARTICULAR PACKING REQUIREMENTS OR EXCEPTIONS: 1. For UN Nos. 0004, 0076, 0078, 0154, 0219 and 0394, packagings must be lead free 2. Intermediate packagings are not required if leakproof drums are used as the outer packaging 3. For UN 0072 and UN 0226, intermediate packagings are not required	Bags paper, multiwall, water resistant plastics textile textile, rubberized woven plastics Receptacles metal plastics	Bags plastics textile, plastic coated or lined Receptacles metal plastics	Boxes. steel (4A). aluminium (4B). natural wood, ordinary (4C1). natural wood, sift proof (4C2). plywood (4D). reconstituted wood (4F). fibreboard (4G). plastics, expanded (4H1). plastics, solid (4H2). Drums steel, removable head (1A2). aluminium, removable head (1B2). fibre (1G). plastics, removable head (1H2).

112(b) This packing instruction applies to dry solids other than powders. PARTICULAR PACKING REQUIREMENTS OR EXCEPTIONS: ..... 1. For UN 0004, 0076, 0078, 0154, 0216, 0219 and 0386, packagings must be lead free. 2. For UN 0209, bags, sift-proof (5H2) are recommended for flake or prilled TNT in the dry state and a maximum net mass of 30 kg.. 3. For UN 0222 and UN 0223, inner packagings are not required	Bags ..... paper, Kraft ..... paper, multiwall, water resistant .... plastics ..... textile ..... textile, rubberized plastics ..... woven plastics	Bags (for UN 0150 only) ..... plastics ..... textile, plastic coated or lined	Bags. woven plastics sift-proof (5H2/3). plastics, film (5H4). textile, sift-proof (5L2). textile, water resistant (5L3). paper, multiwall, water resistant (5M2). Boxes steel (4A). aluminium (4B). natural wood, ordinary (4C1). natural wood, sift proof (4C2). plywood (4D) reconstituted wood (4F). fibreboard (4G). plastics, expanded (4H1). plastics, solid (4H2). Drums steel, removable head (1A2). aluminium, removable head (1B2). fibre (1G). plastics, removable head (1H2).
112(c) This packing instruction applies to solid dry powders ..... PARTICULAR PACKING REQUIREMENTS OR EXCEPTIONS: 1. For UN 0004, 0076, 0078, 0154, 0216, 0219 and 0386, packagings must be lead free 2. For UN 0209, bags, sift-proof (5H2) are recommended for flake or prilled TNT in the dry state. Bags must not exceed a maximum net mass of 30 kg. 3. Inner packagings are not required if drums are used as the outer packaging. 4. At least one of the packagings must be sift-proof	Bags ..... paper, multiwall, water resistant .... plastics ..... woven plastics ..... Receptacles ..... fibreboard ..... metal ..... plastics ..... wood	Bags ..... paper, multiwall, water resistant with inner lining. plastics ..... Receptacles ..... metal ..... plastics	Boxes. steel (4A). natural wood, ordinary (4C1). natural wood, sift proof (4C2). plywood (4D). reconstituted wood (4F). fibreboard (4G). plastics, solid (4H2). Drums. steel, removable head (1A2). aluminium, removable head (1B2). fibre (1G).
113 ..... PARTICULAR PACKING REQUIREMENTS OR EXCEPTIONS: 1. For UN 0094 and UN 0305, no more than 50 g of substance must be packed in an inner packaging 2. For UN 0027, inner packagings are not necessary when drums are used as the outer packaging 3. At least one of the packagings must be sift- proof 4. Sheets must only be used for UN 0028	Bags ..... paper ..... plastics ..... textile, rubberized ..... Receptacles ..... fibreboard ..... metal ..... plastics ..... wood ..... Sheets ..... paper, kraft ..... paper, waxed	Not necessary	Boxes. steel (4A). natural wood, ordinary (4C1). natural wood, sift-proof walls (4C2). plywood (4D). reconstituted wood (4F). fibreboard (4G). plastics, solid (4H2). Drums steel, removable head (1A2). aluminium, removable head (1B2). fibre (1G).

TABLE OF PACKING METHODS—Continued

Packing instruction	Inner packagings	Intermediate packagings	Outer packagings
114(a) This packing instruction applies to wetted solids PARTICULAR PACKING REQUIREMENTS OR EXCEPTIONS: 1. For UN 0077, 0234, 0235 and 0236, packagings must be lead free. 2. For UN 0342, inner packagings are not required when metal (1A2 or 1B2) or plastics (1H2) drums are used as outer packagings. 3. Intermediate packagings are not required if leakproof removable head drums are used as the outer packaging.	Bags plastics textile woven plastics Receptacles metal plastics	Bags plastics textile, plastic coated or lined Receptacles metal plastics	Boxes. steel (4A). natural wood, ordinary (4C1). natural wood, sift proof walls (4C2). plywood (4D). reconstituted wood (4F). fibreboard (4G). plastics, solid (4H2). Drums. steel, removable head (1A2). aluminium, removable head (1B2). plywood (1D). fibre (1G). plastics, removable head (1H2).
114(b) This packing instruction applies to dry solids PARTICULAR PACKING REQUIREMENTS OR EXCEPTIONS: 1. For UN 0077, 0132, 0234, 0235 and 0236, packagings must be lead free 2. For UN 0160 and UN 0161, when metal drums (1A2 or 1B2) are used as the outer packaging, metal packagings must be so constructed that the risk of explosion, by reason of increased internal pressure from internal or external causes is prevented 3. For UN 0160 and UN 0161, inner packagings are not required if drums are used as the outer packaging	Bags paper, kraft plastics textile, sift-proof woven plastics, sift-proof Receptacles fibreboard metal paper plastics woven plastics, sift-proof	Not necessary natural wood, ordinary (4C1). natural wood, sift proof walls (4C2) plywood (4D). reconstituted wood (4F). fibreboard (4G). Drums. steel, removable head (1A2). aluminium, removable head (1B2) plywood (1D). fibre (1G). plastics, removable head (1H2).	Boxes.
115 PARTICULAR PACKING REQUIREMENTS OR EXCEPTIONS: 1. For liquid explosives, inner packagings must be surrounded with non-combustible absorbent cushioning material in sufficient quantity to absorb the entire liquid content. Metal receptacles should be cushioned from each other. The net mass of explosive per package may not exceed 30 kg when boxes are used as outer packaging. The net volume of explosive in each package other than boxes must not exceed 120 litres 2. For UN 0075, 0143, 0495 and 0497 when boxes are used as the outer packaging, inner packagings must have taped screw cap closures and be not more than 5 litres capacity each. A composite packaging consisting of a plastic receptacle in a metal drum (6HA1) may be used in lieu of combination packagings. Liquid substances must not freeze at temperatures above −15°C (+5°F) 3. For UN 0144, intermediate packagings are not necessary.	Receptacles metal plastics	Bags plastics in metal receptacles Drums metal	Boxes. natural wood, ordinary (4C1). natural wood, sift proof walls (4C2). plywood (4D). reconstituted wood (4F). fibreboard (4G). Drums. steel, removable head (1A2). aluminium, removable head (1B2). plywood (1D). fibre (1G). Specification MC–200 containers may be used for transport by motor vehicle.
116	Bags	Not necessary	Bags.

PARTICULAR PACKING REQUIREMENTS OR EXCEPTIONS: 1. For UN 0082, 0241, 0331 and 0332, inner packagings are not necessary if leakproof removable head drums are used as the outer packaging 2. For UN 0082, 0241, 0331 and 0332, inner packagings are not required when the explosive is contained in a material impervious to liquid 3. For UN 0081, inner packagings are not required when contained in rigid plastic which is impervious to nitric esters 4. For UN 0331, inner packagings are not required when bags (5H2), (5H3) or (5H4) are used as outer packagings 5. Bags (5H2 or 5H3) must be used only for UN 0082, 0241, 0331 and 0332 6. For UN 0081, bags must not be used as outer packagings	paper, water and oil resistant plastics texitile, plasic coated or lined woven plasics, sift-proof Receptacles fibreboard, water resistant metal plastics wood, sift-proof Sheets paper, water resistant paper, waxed plastics		woven plastics (5H1/2/3). paper, mulitwall, water resistant (5M2). plastics, film (5H4). textile, sift-proof (5L2). textile, water resistant (5L3). Boxes. steel (4A). aluminium (4B). wood, natural, ordinary (4C1). natural wood, sift proof walls (4C2). plywood (4D). reconstituted wood (4F). fibreboard (4G). plastics, solid (4H2). Drums. steel, removable head (1A2). aluminium, removable head (1B2). fibre (1G). plastics, removable head (1H2). Jerricans. steel, removable head (3A2). plastics, removable head (3H2).
117	Not necessary	Not necessary	IBCs. metal (11A), (11B), (11N), (21A), (21B), (21N), (31A), (31B), (31N). flexible (13H2), (13H3), (13H4), (13L2), (13L3), (13L4), (13M2). rigid plastics (11H1), (11H2), (21H1), (21H2), (31H1), (31H2). composite (11HZ1), (11HZ2), (21HZ1), (21HZ2), (31HZ1), (31HZ2).
PARTICULAR PACKING REQUIREMENTS OR EXCEPTIONS: 1. This packing instruction may only be used for explosives of 0082 when they are mixtures of ammonium nitrate or other inorganic nitrates with other combustible substances which are not explosive ingredients. Such explosives must not contain nitroglycerin, similar liquid organic nitrates, liquid or solid nitrocarbons, or chlorates. 2. This packing instruction may only be used for explosives of UN 0241 which consist of water as an essential ingredient and high proportions of ammonium nitrate or other oxidizers, some or all of which are in solution. The other constituents may include hydrocarbons or aluminium powder, but must not include nitro-derivatives such as trinitrotoluene. 3. Metal IBCs must not be used for UN 0082 and 0241. 4. Flexible IBCs may only be used for solids.			
130	Not necessary	Not necessary	Boxes.

TABLE OF PACKING METHODS—Continued

Packing instruction	Inner packagings	Intermediate packagings	Outer packagings
PARTICULAR PACKING REQUIREMENTS OR EXCEPTIONS: 1. The following applies to UN 0006, 0009, 0010, 0015, 0016, 0018, 0019, 0034, 0035, 0038, 0039, 0048, 0056, 0137, 0138, 0168, 0169, 0171, 0181, 0182, 0183, 0186, 0221, 0238, 0243, 0244, 0245, 0246, 0254, 0280, 0281, 0286, 0287, 0297, 0299, 0300, 0301, 0303, 0321, 0328, 0329, 0344, 0345 0346, 0347, 0362, 0363, 0370, 0412, 0424, 0425, 0434, 0435, 0436, 0437, 0438, 0451, 0459 and 0488. Large and robust explosives articles, normally intended for military use, without their means of initiation or with their means of initiation containing at least two effective protective features, may be carried unpackaged. When such articles have propelling charges or are self-propelled, their ignition systems must be protected against stimuli encountered during normal conditions of transport. A negative result in Test Series 4 on an unpackaged article indicates that the article can be considered for transport unpackaged. Such unpackaged articles may be fixed to cradles or contained in crates or other suitable handling devices.			steel (4A). aluminium (4B). wood natural, ordinary (4C1). natural wood, sift proof walls (4C2). plywood (4D). reconstituted wood (4F). fibreboard (4G). plastics, expanded (4H1). plastics, solid (4H2). Drums. steel, removable head (1A2). aluminium, removable head (1B2). fibre (1G). plastics, removable head (1H2).
131	Bags	Not necessary	Boxes.
PARTICULAR PACKING REQUIREMENTS OR EXCEPTIONS: 1. For UN 0029, 0267 and 0455, bags and reels may not be used as inner packagings 2. For UN 0030, 0255 and 0456, inner packagings are not required when detonators are packed in pasteboard tubes, or when their leg wires are wound on spools with the caps either placed inside the spool or securely taped to the wire on the spool, so as to restrict freedom of movement of the caps and to protect them from impact forces 3. For UN 0360, 0361 and 0500, detonators are not required to be attached to the safety fuse, metal-clad mild detonating cord, detonating cord, or shock tube. Inner packagings are not required if the packing configuration restricts freedom of movement of the caps and protects them from impact forces	paper plastics Receptacles fibreboard metal plastics wood Reels		steel (4A). aluminium (4B). wood, natural, ordinary (4C1). natural wood, sift proof walls (4C2). plywood (4D). reconstituted wood (4F). fibreboard (4G). Drums. steel, removable head (1A2). aluminium, removable head (1B2). fibre (1G). plastics, removable head (1H2).
132(a)	Not necessary	Not necessary	Boxes. steel (4A). aluminium (4B). wood, natural, ordinary (4C1). wood, natural, sift proof walls (4C2). plywood (4D). reconstituted wood (4F). fibreboard (4G). plastics, solid (4H2).

132(b)	Receptacles fibreboard metal plastics Sheets paper plastics	Not necessary	Boxes. steel (4A). aluminium (4B). wood, natural, ordinary (4C1). wood, natural, sift proof walls (4C2). plywood (4D). reconstituted wood (4F). fibreboard (4G). plastics, solid (4H2).
133 PARTICULAR PACKING REQUIREMENTS OR EXCEPTIONS: 1. For UN 0043, 0212, 0225, 0268 and 0306 trays are not authorized as inner packagings 2. Intermediate packagings are only required when trays are used as inner packagings fibreboard metal plastics wood Trays, fitted with dividing partitions fibreboard plastics wood	Receptacles fibreboard metal plastics wood	Receptacles steel (4A). aluminium (4B). wood, natural, ordinary (4C1). wood, natural, sift proof walls (4C2).. plywood (4D). reconstituted wood (4F). fibreboard (4G). plastics, solid (4H2)..	Boxes.
134	Bags water resistant Receptacles fibreboard metal plastics wood Sheets fibreboard, corrugated Tubes fibreboard	Not necessary	Boxes. steel (4A). aluminium (4B). wood, natural, ordinary (4C1). wood, natural, sift proof walls (4C2). plywood (4D). reconstituted wood (4F). fibreboard (4G). plastics, solid (4H2). Drums. steel, removable head (1A2). aluminium, removable head (1B2).

TABLE OF PACKING METHODS—Continued

Packing instruction	Inner packagings	Intermediate packagings	Outer packagings
135	Bags paper plastics Receptacles fibreboard metal plastics wood Sheets paper plastics	Not necessary	Boxes. steel (4A). aluminium (4B). wood, natural, ordinary (4C1). wood, natural, sift proof walls (4C2). plywood (4D). reconstituted wood (4F). fibreboard (4G). plastics, expanded (4H1). plastics, solid (4H2). Drums. steel, removable head (1A2). aluminium, removable head (1B2). fibre (1G). plastics, removable head (1H2).
136	Bags plastics textile Boxes. fibreboard plastics wood Dividing partitions in the outer packagings	Not necessary	Boxes. steel (4A). aluminium (4B) wood, natural, ordinary (4C1). wood, natural, sift proof walls (4C2). plywood (4D). reconstituted wood (4F). fibreboard (4G). plastics, solid (4H2). Drums. steel, removable head (1A2). aluminium, removable head (1B2). fibre (1G). plastics, removable head (1H2).
137	Bags	Not necessary	Boxes.

PARTICULAR PACKING REQUIREMENTS OR EXCEPTIONS: For UN 0059, 0439, 0440 and 0441, when the shaped charges are packed singly, the conical cavity must face downwards and the package marked ''THIS SIDE UP''. When the shaped charges are packed in pairs, the conical cavities must face inwards to minimize the jetting effect in the event of accidental initiation plastics Boxes fibreboard Tubes fibreboard metal plastics Dividing partitions in the outer packagings		steel (4A). aluminium (4B). wood, natural, ordinary (4C1). wood, natural, sift proof walls (4C2).. plywood (4D). reconstituted wood (4F). fibreboard (4G)..	
138	Bags plastics	Not necessary 	Boxes. steel (4A). aluminium (4B). wood, natural, ordinary (4C1). wood, natural, sift proof walls (4C2). plywood (4D). reconstituted wood (4F). fibreboard (4G). plastics, solid (4H2). Drums. steel, removable head (1A2). aluminium, removable head (1B2).
139 PARTICULAR PACKING REQUIREMENTS OR EXCEPTIONS: 1. For UN 0065, 0102, 0104, 0289 and 0290, the ends of the detonating cord must be sealed, for example, by a plug firmly fixed so that the explosive cannot escape. The ends of CORD DETONATING flexible must be fastened securely 2. For UN 0065 and UN 0289, inner packagings are not required when they are fastened securely in coils	Bags plastics Receptacles fibreboard metal plastics wood Reels Sheets. paper plastics	Not necessary	Boxes. steel (4A). aluminium (4B). wood, natural, ordinary (4C1). wood, natural, sift proof walls (4C2). plywood (4D). reconstituted wood (4F). fibreboard (4G). plastics, solid (4H2). Drums. steel, removable head (1A2). aluminium, removable head (1B2). plywood (1D). fibre (1G). plastics, removable head (1H2).
140	Bags	Not necessary	Boxes.

TABLE OF PACKING METHODS—Continued

Packing instruction	Inner packagings	Intermediate packagings	Outer packagings
PARTICULAR PACKING REQUIREMENTS OR EXCEPTIONS: 1. If the ends of UN 0105 are sealed, no inner packagings are required 2. For UN 0101, the packaging must be sift-proof except when the fuse is covered by a paper tube and both ends of the tube are covered with removable caps 3. For UN 0101, steel or aluminium boxes or drums must not be used	plastics Reels Sheets paper, kraft plastics		steel (4A). aluminium (4B). wood, natural, ordinary (4C1). wood, natural, sift proof walls (4C2). plywood (4D). reconstituted wood (4F). fibreboard (4G). plastics, solid (4H2). Drums. steel, removable head (1A2). aluminium, removable head (1B2). fibre (1G).
141	Receptacles fibreboard metal plastics wood Trays, fitted with dividing partitions. plastics wood Dividing partitions in the outer packagings.	Not necessary	Boxes. steel (4A). aluminium (4B). wood, natural, ordinary (4C1). wood, natural, sift proof walls (4C2). plywood (4D). reconstituted wood (4F). fibreboard (4G). plastics, solid (4H2). Drums. steel, removable head (1A2). aluminium, removable head (1B2). fibre (1G). plastics, removable head (1H2).
142	Bags paper plastics Receptacles fibreboard metal plastics wood Sheets paper Trays, fitted with dividing partitions plastics	Not necessary	Boxes. steel (4A). aluminium (4B). wood, natural, ordinary (4C1). wood, natural, sift proof walls (4C2). plywood (4D). reconstituted wood (4F). fibreboard (4G). plastics, solid (4H2). Drums. steel, removable head (1A2). aluminium, removable head (1B2). fibre (1G). plastics, removable head (1H2).
143	Bag	Not necessary	Boxes.

PARTICULAR PACKING REQUIREMENTS OR EXCEPTIONS: 1. For UN 0271, 0272, 0415 and 0491 when metal packagings are used, metal packagings must be so constructed that the risk of explosion, by reason of increase in internal pressure from internal or external causes is prevented 2. Composite packagings (6HH2) (plastic receptacle with outer solid box) may be used in lieu of combination packagings	paper, kraft plastics textile textile, rubberized Receptacles fibreboard metal plastics Trays, fitted with dividing partitions plastics wood		steel (4A). aluminum (4B). wood, natural, ordinary (4C1). wood, natural, sift proof walls (4C2). plywood (4D). reconstituted wood (4F). fibreboard (4G). plastics, solid (4H2). Drums. steel, removable head (1A2). aluminium, removable head (1B2). plywood (1D). fibre (1G). plastics, removable head (1H2).
144 PARTICULAR PACKING REQUIREMENTS OR EXCEPTIONS: For UN 0248 and UN 0249, packagings must be protected against the ingress of water. When CONTRIVANCES, WATER ACTIVATED are transported unpackaged, they must be provided with at least two independent protective features which prevent the ingress of water	Receptacles fibreboard metal plastics Dividing partitions in the outer packagings.	Not necessary	Boxes. 2steel (4A). aluminum (4B). wood, natural, ordinary (4C1) with metal liner. plywood (4D) with metal liner. reconstituted wood (4F) with metal liner. plastics, expanded (4H1).

US 1

1. A jet perforating gun, charged, oil well may be transported under the following conditions:

a. Initiation devices carried on the same motor vehicle or offshore supply vessel must be segregated; each kind from every other kind, and from any gun, tool or other supplies, unless approved in accordance with §173.56. Segregated initiation devices must be carried in a container having individual pockets for each such device or in a fully enclosed steel container lined with a non-sparking material. No more than two segregated initiation devices per gun may be carried on the same motor vehicle.

b. Each shaped charge affixed to the gun may not contain more than 112 g (4 ounces) of explosives.

c. Each shaped charge if not completely enclosed in glass or metal, must be fully protected by a metal cover after installation in the gun.

d. A jet perforating gun classed as 1.1D or 1.4D may be transported by highway by private or contract carriers engaged in oil well operations.

(i) A motor vehicle transporting a gun must have specially built racks or carrying cases designed and constructed so that the gun is securely held in place during transportation and is not subject to damage by contact, one to the other or any other article or material carried in the vehicle; and

(ii) The assembled gun packed on the vehicle may not extend beyond the body of the motor vehicle.

e. A jet perforating gun classed as 1.4D may be transported by a private offshore supply vessel only when the gun is carried in a motor vehicle as specified in paragraph (d) of this packing method or on offshore well tool pallets provided that:

(i) All the conditions specified in paragraphs (a), (b), and (c) of this packing method are met;

(ii) The total explosive contents do not exceed 90.8 kg (200 pounds) per tool pallet;

(iii) Each cargo vessel compartment may contain up to 90.8 kg (200 pounds) of explosive content if the segregation requirements in §176.83(b)(3) of this subchapter are met; and

(iv) When more than one vehicle or tool pallet is stowed ''on deck'' a minimum horizontal separation of 3 m (9.8 feet) must be provided.

(d) Class 1 (explosive) materials owned by the Department of Defense and packaged prior to January 1, 1990, in accordance with the requirements of this subchapter in effect at that time, are excepted from the requirements of part 178 of this subchapter provided the packagings have maintained their integrity and the explosive material is declared as government-owned goods packaged prior to January 1, 1990.

[Amdt. 173–260, 62 FR 24720, May 6, 1997; 62 FR 45702, Aug. 28, 1997; 62 FR 51560, Oct. 1, 1997; 63 FR 1884, Jan. 12, 1998]

§ 173.63 Packaging exceptions.

(a) Cord, detonating (UN 0065), having an explosive content not exceeding 6.5 g (0.23 ounces) per 30 centimeter length (one linear foot) may be offered for transportation domestically and transported as Cord, detonating (UN 0289), Division 1.4 Compatibility Group D (1.4D) explosives, if the gross weight of all packages containing Cord, detonating (UN 0065), does not exceed 45 kg (99 pounds) per:

(1) Transport vehicle, freight container, or cargo-only aircraft;

(2) Off-shore down-hole tool pallet carried on an off-shore supply vessel;

(3) Cargo compartment of a cargo vessel; or

(4) Passenger-carrying aircraft used to transport personnel to remote work sites, such as offshore drilling units.

(b) *Cartridges, small arms, and cartridges power devices.* (1) Cartridges, small arms, and cartridges power devices (which are used to project fastening devices) which have been classed as a Division 1.4S explosive may be reclassed, offered for transportation, and transported as ORM–D material when packaged in accordance with paragraph (b)(2) of this section; such transportation is excepted from the requirements of subparts E (Labeling) and F (Placarding) of part 172 of this subchapter. Cartridges, small arms, and cartridges power devices that may be shipped as ORM–D material is limited to:

(i) Ammunition for rifle, pistol or shotgun;

(ii) Ammunition with inert projectiles or blank ammunition;

(iii) Ammunition having no tear gas, incendiary, or detonating explosive projectiles;

(iv) Ammunition not exceeding 12.7 mm (50 caliber or 0.5 inch) for rifle or pistol, cartridges or 8 gauge for shotshells; and

(v) Cartridges, power devices which are used to project fastening devices.

(2) Packaging for cartridges, small arms, and cartridges power devices as ORM–D material must be as follows:

(i) Ammunition must be packed in inside boxes, or in partitions which fit snugly in the outside packaging, or in metal clips;

(ii) Primers must be protected from accidental initiation;

(iii) Inside boxes, partitions or metal clips must be packed in securely-closed strong outside packagings;

(iv) Maximum gross weight is limited to 30 kg (66 pounds) per package; and

(v) Cartridges, power devices which are used to project fastening devices and 22 caliber rim-fire cartridges may be packaged loose in strong outside packagings.

(c)—(e) [Reserved]

(f) Detonators containing no more than 1 g explosive (excluding ignition and delay charges) that are electric blasting caps with leg wires 4 feet long or longer, delay connectors in plastic sheaths, or blasting caps with empty plastic tubing 12 feet long or longer may be packed as follows in which case they are excepted from the packaging requirements of § 173.62:

(1) No more than 50 detonators in one inner packaging;

(2) IME Standard 22 container or compartment is used as the outer packaging;

(3) No more than 1000 detonators in one outer packaging; and

(4) No material may be loaded on top of the IME Standard 22 container and no material may be loaded against the outside door of the IME Standard 22 compartment.

(g) Detonators that are classed as 1.4B or 1.4S and contain no more than 1 g of explosive (excluding ignition and delay charges) may be packed as follows in which case they are excepted from the packaging requirements of § 173.62:

(1) No more than 50 detonators in one inner packaging;

(2) IME Standard 22 container is used as the outer packaging;

(3) No more than 1000 detonators in one outer packaging; and

(4) Each inner packaging is marked ''l.4B Detonators'' or ''1.4S Detonators'', as appropriate.

[Amdt. 173–224, 55 FR 52617, Dec. 21, 1990, as amended at 56 FR 66268, Dec. 20, 1991; Amdt. 173–236, 58 FR 50536, Sept. 24, 1993; Amdt. 173–253, 61 FR 27175, May 30, 1996]

Subpart D—Definitions Classification, Packing Group Assignments and Exceptions for Hazardous Materials Other Than Class 1 and Class 7

SOURCE: Amdt. 173–224, 55 FR 52634 Dec. 21, 1990, unless otherwise noted.

§ 173.115 Class 2, Divisions 2.1, 2.2, and 2.3—Definitions.

(a) *Division 2.1 (Flammable gas).* For the purpose of this subchapter, a *flammable gas* (Division 2.1) means any material which is a gas at 20°C (68°F) or less and 101.3 kPa (14.7 psi) of pressure (a material which has a boiling point of 20°C (68°F) or less at 101.3 kPa (14.7 psi)) which—

(1) Is ignitable at 101.3 kPa (14.7 psi) when in a mixture of 13 percent or less by volume with air; or

(2) Has a flammable range at 101.3 kPa (14.7 psi) with air of at least 12 percent regardless of the lower limit.

Except for aerosols, the limits specified in paragraphs (a)(1) and (a)(2) of this section shall be determined at 101.3 kPa (14.7 psi) of pressure and a temperature of 20°C (68°F) in accordance with ASTM E681–85, Standard Test Method for Concentration Limits of Flammability of Chemicals or other equivalent method approved by the Associate Administrator for Hazardous Materials Safety. The flammability of aerosols is determined by the tests specified in § 173.306(i) of this part.

(b) *Division 2.2 (non-flammable, nonpoisonous compressed gas—including compressed gas, liquefied gas, pressurized cryogenic gas, compressed gas in solution, asphyxiant gas and oxidizing gas).* For the purpose of this subchapter, a non-flammable, nonpoisonous compressed gas (Division 2.2) means any material (or mixture) which—

(1) Exerts in the packaging an absolute pressure of 280 kPa (40.6 psia) or greater at 20 °C (68 °F), and

(2) Does not meet the definition of Division 2.1 or 2.3.

(c) *Division 2.3 (Gas poisonous by inhalation).* For the purpose of this subchapter, a *gas poisonous by inhalation* (Division 2.3) means a material which is a gas at 20°C (68°F) or less and a pressure of 101.3 kPa (14.7 psi) (a material which has a boiling point of 20°C (68°F) or less at 101.3 kPa (14.7 psi)) and which—

(1) Is known to be so toxic to humans as to pose a hazard to health during transportation, or

(2) In the absence of adequate data on human toxicity, is presumed to be toxic to humans because when tested on laboratory animals it has an LC50 value of not more than 5000 ml/m^3 (see § 173.116(a) of this subpart for assignment of Hazard Zones A, B, C or D). LC50 values for mixtures may be determined using the formula in § 173.133(b)(1)(i) of this subpart.

(d) *Non-liquefied compressed gas.* A *non-liquefied compressed gas* means a gas, other than in solution, which in a packaging under the charged pressure is entirely gaseous at a temperature of 20 °C (68 °F).

(e) *Liquefied compressed gas.* A *liquefied compressed gas* means a gas which in a packaging under the charged pressure, is partially liquid at a temperature of 20 °C (68 °F).

(f) *Compressed gas in solution.* A *compressed gas in solution* is a non-liquefied compressed gas which is dissolved in a solvent.

(g) *Cryogenic liquid.* A *cryogenic liquid* means a refrigerated liquefied gas having a boiling point colder than −90 °C (−130 °F) at 101.3 kPa (14.7 psi) absolute. A material meeting this definition is subject to requirements of this subchapter without regard to whether it meets the definition of a non-flammable, non-poisonous compressed gas in paragraph (b) of this section.

(h) *Flammable range.* The term *flammable range* means the difference between the minimum and maximum volume percentages of the material in air that forms a flammable mixture.

(i) *Service pressure.* The term *service pressure* means the authorized pressure marking on the packaging. For example, for a cylinder marked ''DOT 3A1800'', the service pressure is 12410 kPa (1800 psi).

(j) *Refrigerant gas or Dispersant gas.* The terms *Refrigerant gas* or *Dispersant gas* apply to all non-poisonous refrigerant gases, dispersant gases (fluorocarbons) listed in §§ 172.101, 173.304(a)(2), 173.314(c), 173.315(a)(1) and 173.315(h), and mixtures thereof, or any other compressed gas having a vapor pressure not exceeding 1792 kPa (260 psi) at 54 °C (130 °F), and restricted for use as a refrigerant, dispersant or blowing agent.

[Amdt. 173–224, 55 FR 52634, Dec. 21, 1990, as amended at 56 FR 66268, Dec. 20, 1991; 57 FR 45461, Oct. 1, 1992; Amdt. 173–236, 58 FR 50236, Sept. 24, 1993; Amdt. 173–234, 58 FR 51532, Oct. 1, 1993; Amdt. 173–241, 59 FR 67506, Dec. 29, 1994; Amdt. 173–255, 61 FR 50625, Sept. 26, 1996]

§ 173.116 Class 2—Assignment of hazard zone.

(a) The hazard zone of a Class 2, Division 2.3 material is assigned in Column 7 of the § 172.101 Table. There are no hazard zones for Divisions 2.1 and 2.2. When the § 172.101 Table provides more than one hazard zone for a Division 2.3 material, or indicates that the hazard zone be determined on the basis of the grouping criteria for Division 2.3, the hazard zone shall be determined by applying the following criteria:

Hazard zone	Inhalation toxicity
A	LC_{50} less than or equal to 200 ppm.
B	LC_{50} greater than 200 ppm and less than or equal to 1000 ppm.
C	LC_{50} greater than 1000 ppm and less than or equal to 3000 ppm.
D	LC_{50} greater than 3000 ppm or less than or equal to 5000 ppm.

(b) The criteria specified in paragraph (a) of this section are represented graphically in § 173.133, Figure 1.

[Amdt. 173–224, 55 FR 52634, Dec. 21, 1990, as amended at 56 FR 66268, Dec. 20, 1991; Amdt. 173–138, 59 FR 49133, Sept. 26, 1994]

§§ 173.117–173.119 [Reserved]

§ 173.120 Class 3—Definitions.

(a) *Flammable liquid.* For the purpose of this subchapter, a *flammable liquid* (Class 3) means a liquid having a flash point of not more than 60.5°C (141°F), or any material in a liquid phase with a flash point at or above 37.8°C (100°F) that is intentionally heated and offered for transportation or transported at or above its flash point in a bulk packaging, with the following exceptions:

(1) Any liquid meeting one of the definitions specified in § 173.115.

(2) Any mixture having one or more components with a flash point of 60.5°C (141°F) or higher, that make up at least 99 percent of the total volume of the mixture, if the mixture is not offered for transportation or transported at or above its flash point.

(3) Any liquid with a flash point greater than 35°C (95°F) which does not sustain combustion according to ASTM 4206 or the procedure in Appendix H of this part.

(4) Any liquid with a flash point greater than 35°C (95°F) and with a fire point greater than 100°C (212°F) according to ISO 2592.

(5) Any liquid with a flash point greater than 35°C (95°F) which is in a water-miscible solution with a water content of more than 90 percent by mass.

(b) Combustible liquid. (1) For the purpose of this subchapter, a *combustible liquid* means any liquid that does not meet the definition of any other hazard class specified in this subchapter and has a flash point above 60.5°C (141°F) and below 93 °C (200 °F).

(2) A flammable liquid with a flash point at or above 38°C (100°F) that does not meet the definition of any other hazard class may be reclassed as a combustible liquid. This provision does not apply to transportation by vessel or aircraft, except where other means of transportation is impracticable. An elevated temperature material that meets the definition of a Class 3 material because it is intentionally heated and offered for transportation or transported at or above its flash point may not be reclassed as a combustible liquid.

(3) A combustible liquid which does not sustain combustion is not subject to the requirements of this subchapter as a combustible liquid. Either the test method specified in ASTM 4206 or the procedure in Appendix H of this part may be used to determine if a material sustains combustion when heated under test conditions and exposed to an external source of flame.

(c) Flash point. (1) *Flash point* means the minimum temperature at which a liquid gives off vapor within a test vessel in sufficient concentration to form an ignitable mixture with air near the surface of the liquid. It shall be determined as follows:

(i) For a homogeneous, single-phase, liquid having a viscosity less than 45 S.U.S. at 38 °C (100 °F) that does not form a surface film while under test, one of the following test procedures shall be used:

(A) Standard Method of Test for Flash Point by Tag Closed Tester, (ASTM D 56);

(B) Standard Methods of Test for Flash Point of Liquids by Setaflash Closed Tester, (ASTM D 3278); or

(C) Standard Test Methods for Flash Point by Small Scale Closed Tester, (ASTM D 3828).

(ii) For a liquid other than one meeting all of the criteria of paragraph (c)(1)(i) of this section, one of the following test procedures shall be used:

(A) Standard Method of Test for Flash Point by Pensky—Martens Closed Tester, (ASTM D 93). For cutback asphalt, use Method B of ASTM D 93 or alternate tests authorized in this standard; or

(B) Standard Methods of Test for Flash Point of Liquids by Setaflash Closed Tester (ASTM D 3278).

(2) For a liquid that is a mixture of compounds that have different volatility and flash points, its flash point shall be determined as specified in paragraph (c)(1) of this section, on the material in the form in which it is to be shipped. If it is determined by this test that the flash point is higher than −7 °C (20 °F) a second test shall be made as follows: a portion of the mixture shall be placed in an open beaker (or similar container) of such dimensions that the height of the liquid can be adjusted so that the ratio of the volume of the liquid to the exposed surface area is 6 to one. The liquid shall be allowed to evaporate under ambient pressure and temperature (20 to 25 °C (68 to 77 °F)) for a period of 4 hours or until 10 percent by volume has evaporated, whichever comes first. A flash point is then run on a portion of the liquid remaining in the evaporation container and the lower of the two flash points shall be the flash point of the material.

(3) For flash point determinations by Setaflash closed tester, the glass syringe specified need not be used as the method of measurement of the test sample if a minimum quantity of 2 ml (0.1 ounce) is assured in the test cup.

(d) If experience or other data indicate that the hazard of a material is greater or less than indicated by the criteria specified in paragraphs (a) and (b) of this section, the Associate Administrator for Hazardous Materials Safety may revise the classification or make the material subject or not subject to the requirements of parts 170–189 of this subchapter.

[Amdt. 173–224, 55 FR 52634 Dec. 21, 1990, as amended by Amdt. 173–227, 56 FR 49989, Oct. 2, 1991; 56 FR 66268, Dec. 20, 1991; 57 FR 45461, Oct. 1, 1992; Amdt. 173–241, 59 FR 67506, 67507, Dec. 29, 1994; Amdt. 173–255, 61 FR 50625, Sept. 26, 1996; Amdt. 173–261, 62 FR 24731, May 6, 1997]

§ 173.121 Class 3—Assignment of packing group.

(a) The packing group of a Class 3 material is as assigned in Column 5 of the § 172.101 Table. When the § 172.101 Table provides more than one packing group for a hazardous material, the packing group shall be determined by applying the following criteria:

Packing group	Flash point (closed-cup)	Initial boiling point
I		≤35 °C (95 °F)
II	<23 °C (73 °F)	> °C (95 °F)
III	≥23 °C, ≤ 60.5°C (141°F)	> °C (95 °F)

(b) *Criteria for inclusion of viscous Class 3 materials in Packing Group III.*

(1) Viscous Class 3 materials in Packing Group II with a flash point of less than 23 °C (73 °F) may be grouped in Packing Group III provided that—

(i) Less than 3 percent of the clear solvent layer separates in the solvent separation test;

(ii) The mixture contains not more than 5 percent of substances in Packing Group I or II of Division 6.1 or Class 8, or not more than 5 percent of substances in Packing Group I of Class 3 requiring a POISON or CORROSIVE subsidiary label (NOTE: The mixture is not necessarily required to bear a POISON or CORROSIVE subsidiary risk label.);

(iii) The capacity of the packaging is not more than 30 L (7.9 gallons); and

(iv) The viscosity and flash point are in accordance with the following table:

Flow time t in seconds	Jet diameter in mm	Flash point c.c.
20<t≤60	4	above 17°C (62.6°F).
60<t≤100	4	above 10°C (50°F).
20<t≤32	6	above 5°C (41°F).
32<t≤44	6	above −1°C (31.2°F).
44<t≤100	6	above −5°C (23°F).
100<t	6	−5°C (23°F) and below.

(2) The methods by which the tests referred to in paragraph (b)(1) of this section shall be performed are as follows:

(i) *Viscosity test*. The flow time in seconds is determined at 23°C (73.4°F) using the ISO standard cup with a 4 mm (0.16 inch) jet (ISO 2431:1984). Where the flow time exceeds 100 seconds, a further test is carried out using the ISO standard cup with a 6 mm (0.24 inch) jet.

(ii) *Solvent Separation Test*. This test is carried out at 23 °C (73 °F) using a 100.0 ml (3 ounces) measuring cylinder of the stoppered type of approximately 25.0 cm (9.8 inches) total height and of a uniform internal diameter of approximately 30 mm (1.2 inches) over the calibrated section. The sample should be stirred to obtain a uniform consistency, and poured in up to the 100 ml (3 ounces) mark. The stopper should be inserted and the cylinder left standing undisturbed for 24 hours. After 24 hours, the height of the upper separated layer should be measured and the percentage of this layer as compared with the total height of the sample calculated.

[Amdt. 173–224, 55 FR 52634, Dec. 21, 1990, as amended at 56 FR 66268, Dec. 20, 1991; Amdt. 173–241, 59 FR 67507, Dec. 29, 1994 Amdt. 173–255, 61 FR 50625, Sept. 26, 1996]

§ 173.124 Class 4, Divisions 4.1, 4.2 and 4.3—Definitions.

(a) *Division 4.1 (Flammable Solid)*. For the purposes of this subchapter, *flammable solid* (Division 4.1) means any of the following three types of materials:

(1) Desensitized explosives that—

(i) When dry are Explosives of Class 1 other than those of compatibility group A, which are wetted with sufficient water, alcohol, or plasticizer to suppress explosive properties; and

(ii) Are specifically authorized by name either in the § 172.101Table or have been assigned a shipping name and hazard class by the Associate Administrator for Hazardous Materials Safety under the provisions of—

(A) An exemption issued under subchapter A of this chapter; or

(B) An approval issued under § 173.56(i) of this part.

(2)(i) Self-reactive materials are materials that are thermally unstable and that can undergo a strongly exothermic decomposition even without participation of oxygen (air). A material is excluded from this definition if any of the following applies:

(A) The material meets the definition of an explosive as prescribed in subpart C of this part, in which case it must be classed as an explosive;

(B) The material is forbidden from being offered for transportation according to § 172.101 of this subchapter or § 173.21;

(C) The material meets the definition of an oxidizer or organic peroxide as prescribed in subpart D of this part, in which case it must be so classed;

(D) The material meets one of the following conditions:

(*1*) Its heat of decomposition is less than 300 J/g; or

(*2*) Its self-accelerating decomposition temperature (SADT) is greater than 75°C (167°F) for a 50 kg package; or

(E) The Associate Administrator for Hazardous Materials Safety has determined that the material does not

present a hazard which is associated with a Division 4.1 material.

(ii) *Generic types.* Division 4.1 self-reactive materials are assigned to a generic system consisting of seven types. A self-reactive substance identified by technical name in the Self-Reactive Materials Table in §173.224 is assigned to a generic type in accordance with that Table. Self-reactive materials not identified in the Self-Reactive Materials Table in §173.224 are assigned to generic types under the procedures of paragraph (a)(2)(iii) of this section.

(A) *Type A.* Self-reactive material type A is a self-reactive material which, as packaged for transportation, can detonate or deflagrate rapidly. Transportation of type A self-reactive material is forbidden.

(B) *Type B.* Self-reactive material type B is a self-reactive material which, as packaged for transportation, neither detonates nor deflagrates rapidly, but is liable to undergo a thermal explosion in a package.

(C) *Type C.* Self-reactive material type C is a self-reactive material which, as packaged for transportation, neither detonates nor deflagrates rapidly and cannot undergo a thermal explosion.

(D) *Type D.* Self-reactive material type D is a self-reactive material which—

(*1*) Detonates partially, does not deflagrate rapidly and shows no violent effect when heated under confinement;

(*2*) Does not detonate at all, deflagrates slowly and shows no violent effect when heated under confinement; or

(*3*) Does not detonate or deflagrate at all and shows a medium effect when heated under confinement.

(E) *Type E.* Self-reactive material type E is a self-reactive material which, in laboratory testing, neither detonates nor deflagrates at all and shows only a low or no effect when heated under confinement.

(F) *Type F.* Self-reactive material type F is a self-reactive material which, in laboratory testing, neither detonates in the cavitated state nor deflagrates at all and shows only a low or no effect when heated under confinement as well as low or no explosive power.

(G) *Type G.* Self-reactive material type G is a self-reactive material which, in laboratory testing, does not detonate in the cavitated state, will not deflagrate at all, shows no effect when heated under confinement, nor shows any explosive power. A type G self-reactive material is not subject to the requirements of this subchapter for self-reactive material of Division 4.1 provided that it is thermally stable (self-accelerating decomposition temperature is 50 °C (122 °F) or higher for a 50 kg (110 pounds) package). A self-reactive material meeting all characteristics of type G except thermal stability is classed as a type F self-reactive, temperature control material.

(iii) *Procedures for assigning a self-reactive material to a generic type.* A self-reactive material must be assigned to a generic type based on—

(A) Its physical state (i.e. liquid or solid), in accordance with the definition of liquid and solid in §171.8 of this subchapter;

(B) A determination as to its control temperature and emergency temperature, if any, under the provisions of §173.21(f);

(C) Performance of the self-reactive material under the test procedures specified in the UN Recommendations on the Transport of Dangerous Goods, Tests and Criteria and the provisions of paragraph (a)(2)(iii) of this section; and

(D) Except for a self-reactive material which is identified by technical name in the Self-Reactive Materials Table in §173.224(b) or a self-reactive material which may be shipped as a sample under the provisions of §173.224, the self-reactive material is approved in writing by the Associate Administrator for Hazardous Materials Safety. The person requesting approval shall submit to the Associate Administrator for Hazardous Materials Safety the tentative shipping description and generic type and—

(*1*) All relevant data concerning physical state, temperature controls, and tests results; or

(*2*) An approval issued for the self-reactive material by the competent authority of a foreign government.

(iv) *Tests.* The generic type for a self-reactive material must be determined using the testing protocol from Figure

14.2 (Flow Chart for Assigning Self-Reactive Substances to Division 4.1) from the UN Recommendations on the Transport of Dangerous Goods, Tests and Criteria.

(3) Readily combustible solids are materials that—

(i) Are solids which may cause a fire through friction, such as matches;

(ii) Show a burning rate faster than 2.2 mm (0.087 inches) per second when tested in accordance with UN Manual of Tests and Criteria; or

(iii) Any metal powders that can be ignited and react over the whole length of a sample in 10 minutes or less, when tested in accordance with UN Manual of Tests and Criteria.

(b) *Division 4.2 (Spontaneously Combustible Material).* For the purposes of this subchapter, *spontaneously combustible material* (Division 4.2) means—

(1) A pyrophoric material. A pyrophoric material is a liquid or solid that, even in small quantities and without an external ignition source, can ignite within five (5) minutes after coming in contact with air when tested according to UN Manual of Tests and Criteria.

(2) A self-heating material. A self-heating material is a material that, when in contact with air and without an energy supply, is liable to self-heat. A material of this type which exhibits spontaneous ignition or if the temperature of the sample exceeds 200 °C (392 °F) during the 24-hour test period when tested in accordance with UN Manual of Tests and Criteria, is classed as a Division 4.2 material.

(c) *Division 4.3 (Dangerous when wet material).* For the purposes of this chapter, *dangerous when wet material* (Division 4.3) means a material that, by contact with water, is liable to become spontaneously flammable or to give off flammable or toxic gas at a rate greater than 1 liter per kilogram of the material, per hour, when tested in accordance with UN Manual of Tests and Criteria.

[Amdt. 173–224, 55 FR 52634, Dec. 21, 1990, as amended at 56 FR 66268, Dec. 20, 1991; 57 FR 45461, Oct. 1, 1992; Amdt. 173–233, 58 FR 33305, June 16, 1993; Amdt. 173–234, 58 FR 51532, Oct. 1, 1993; Amdt. 173–241, 59 FR 67507, Dec. 29, 1994; Amdt. 173–261, 62 FR 24731, May 6, 1997]

§ 173.125 Class 4—Assignment of packing group.

(a) The packing group of a Class 4 material is assigned in Column (5) of the § 172.101 Table. When the § 172.101 Table provides more than one packing group for a hazardous material, the packing group shall be determined on the basis of test results following test methods given in the UN Manual of Tests and Criteria and by applying the appropriate criteria given in this section.

(b) Packing group criteria for readily combustible materials of Division 4.1 are as follows:

(1) Powdered, granular or pasty materials must be classified in Division 4.1 when the time of burning of one or more of the test runs, in accordance with the UN Manual of Tests and Criteria, is less than 45 seconds or the rate of burning is more than 2.2 mm/s. Powders of metals or metal alloys must be classified in Division 4.1 when they can be ignited and the reaction spreads over the whole length of the sample in 10 minutes or less.

(2) Packing group criteria for readily combustible materials of Division 4.1 are assigned as follows:

(i) For readily combustible solids (other than metal powders), Packing Group II if the burning time is less than 45 seconds and the flame passes the wetted zone. Packing Group II must be assigned to powders of metal or metal alloys if the zone of reaction spreads over the whole length of the sample in 5 minutes or less.

(ii) For readily combustible solids (other than metal powders), Packing Group III must be assigned if the burning rate time is less than 45 seconds and the wetted zone stops the flame propagation for at least 4 minutes. Packing Group III must be assigned to metal powders if the reaction spreads over the whole length of the sample in more than 5 minutes but not more than 10 minutes.

(c) Packing group criteria for Division 4.2 materials is as follows:

(1) Pyrophoric liquids and solids of Division 4.2 are assigned to Packing Group I.

(2) A self-heating material is assigned to—

(i) Packing Group II, if the material gives a positive test result when tested with a 25 mm cube size sample at 140°C; or

(ii) Packing Group III, if—

(A) A positive test result is obtained in a test using a 100 mm sample cube at 140°C and a negative test result is obtained in a test using a 25 mm sample cube at 140°C and the substance is transported in packagings with a volume of more than 3 cubic meters; or

(B) A positive test result is obtained in a test using a 100 mm sample cube at 120°C and a negative result is obtained in a test using a 25 mm sample cube at 140°C and the substance is transported in packagings with a volume of more than 450 liters; or

(C) A positive result is obtained in a test using a 100 mm sample cube at 100°C and a negative result is obtained in a test using a 25 mm sample cube at 140°C and the substance is transported in packagings with a volume of less than 450 liters.

(d) A Division 4.3 dangerous when wet material is assigned to—

(1) Packing Group I, if the material reacts vigorously with water at ambient temperatures and demonstrates a tendency for the gas produced to ignite spontaneously, or which reacts readily with water at ambient temperatures such that the rate of evolution of flammable gases is equal or greater than 10 liters per kilogram of material over any one minute;

(2) Packing Group II, if the material reacts readily with water at ambient temperatures such that the maximum rate of evolution of flammable gases is equal to or greater than 20 liters per kilogram of material per hour, and which does not meet the criteria for Packing Group I; or

(3) Packing Group III, if the material reacts slowly with water at ambient temperatures such that the maximum rate of evolution of flammable gases is greater than 1 liter per kilogram of material per hour, and which does not meet the criteria for Packing Group I or II.

[Amdt. 173–224, 55 FR 52634 Dec. 21, 1990, as amended by Amdt. 173–255, 61 FR 50625, Sept. 26, 1996; Amdt. 173–261, 62 FR 24731, May 6, 1997; 62 FR 51560, Oct. 1, 1997]

§ 173.127 Class 5, Division 5.1—Definition and assignment of packing groups.

(a) *Definition.* For the purpose of this subchapter, *oxidizer* (Division 5.1) means a material that may, generally by yielding oxygen, cause or enhance the combustion of other materials.

(1) A solid material is classed as a Division 5.1 material if, when tested in accordance with the UN Manual of Tests and Criteria, its mean burning time is less than or equal to the burning time of a 3:7 potassium bromate/cellulose mixture.

(2) A liquid material is classed as a Division 5.1 material if, when tested in accordance with the UN Manual of Tests and Criteria, it spontaneously ignites or its mean time for a pressure rise from 690 kPa to 2070 kPa gauge is less then the time of a 1:1 nitric acid (65 percent)/cellulose mixture.

(b) *Assignment of packing groups.* (1) The packing group of a Division 5.1 material which is a solid shall be assigned using the following criteria:

(i) Packing Group I, for any material which, in either concentration tested, exhibits a mean burning time less than the mean burning time of a 3:2 potassium bromate/cellulose mixture.

(ii) Packing Group II, for any material which, in either concentration tested, exhibits a mean burning time less than or equal to the mean burning time of a 2:3 potassium bromate/cellulose mixture and the criteria for Packing Group I are not met.

(iii) Packing Group III for any material which, in either concentration tested, exhibits a mean burning time less than or equal to the mean burning time of a 3:7 potassium bromate/cellulose mixture and the criteria for Packing Group I and II are not met.

(2) The packing group of a Division 5.1 material which is a liquid shall be assigned using the following criteria:

(i) Packing Group I for:

(A) Any material which spontaneously ignites when mixed with cellulose in a 1:1 ratio; or

(B) Any material which exhibits a mean pressure rise time less than the pressure rise time of a 1:1 perchloric acid (50 percent)/cellulose mixture.

(ii) Packing Group II, any material which exhibits a mean pressure rise

time less than or equal to the pressure rise time of a 1:1 aqueous sodium chlorate solution (40 percent)/cellulose mixture and the criteria for Packing Group I are not met.

(iii) Packing Group III, any material which exhibits a mean pressure rise time less than or equal to the pressure rise time of a 1:1 nitric acid (65 percent)/cellulose mixture and the criteria for Packing Group I and II are not met.

[Amdt. 173–261, 62 FR 24732, May 6, 1997]

§ 173.128 Class 5, Division 5.2—Definitions and types.

(a) *Definitions.* For the purposes of this subchapter, *organic peroxide (Division 5.2)* means any organic compound containing oxygen (O) in the bivalent -O-O- structure and which may be considered a derivative of hydrogen peroxide, where one or more of the hydrogen atoms have been replaced by organic radicals, unless any of the following paragraphs applies:

(1) The material meets the definition of an explosive as prescribed in subpart C of this part, in which case it must be classed as an explosive;

(2) The material is forbidden from being offered for transportation according to § 172.101 of this subchapter or § 173.21;

(3) The Associate Administrator for Hazardous Materials Safety has determined that the material does not present a hazard which is associated with a Division 5.2 material; or

(4) The material meets one of the following conditions:

(i) For materials containing no more than 1.0 percent hydrogen peroxide, the available oxygen, as calculated using the equation in paragraph (a)(4)(ii) of this section, is not more than 1.0 percent, or

(ii) For materials containing more than 1.0 percent but not more than 7.0 percent hydrogen peroxide, the available oxygen, content (O_a) is not more than 0.5 percent, when determined using the equation:

$$O_a = 16 \times \sum_{i=1}^{k} \frac{n_i c_i}{m_i}$$

where, for a material containing k species of organic peroxides:

n_i=number of -O-O- groups per molecule of the *i* th species

c_i=concentration (mass percent) of the *i* th species

m_i=molecular mass of the *i* th species

(b) *Generic types.* Division 5.2 organic peroxides are assigned to a generic system which consists of seven types. An organic peroxide identified by technical name in the Organic Peroxides Table in § 173.225 is assigned to a generic type in accordance with that Table. Organic peroxides not identified in the Organic Peroxides Table are assigned to generic types under the procedures of paragraph (c) of this section.

(1) *Type A.* Organic peroxide type A is an organic peroxide which can detonate or deflagrate rapidly as packaged for transport. Transportation of type A organic peroxides is forbidden.

(2) *Type B.* Organic peroxide type B is an organic peroxide which, as packaged for transport, neither detonates nor deflagrates rapidly, but can undergo a thermal explosion.

(3) *Type C.* Organic peroxide type C is an organic peroxide which, as packaged for transport, neither detonates nor deflagrates rapidly and cannot undergo a thermal explosion.

(4) *Type D.* Organic peroxide type D is an organic peroxide which—

(i) Detonates only partially, but does not deflagrate rapidly and is not affected by heat when confined;

(ii) Does not detonate, deflagrates slowly, and shows no violent effect if heated when confined; or

(iii) Does not detonate or deflagrate, and shows a medium effect when heated under confinement.

(5) *Type E.* Organic peroxide type E is an organic peroxide which neither detonates nor deflagrates and shows low, or no, effect when heated under confinement.

(6) *Type F.* Organic peroxide type F is an organic peroxide which will not detonate in a cavitated state, does not deflagrate, shows only a low, or no, effect if heated when confined, and has low, or no, explosive power.

(7) *Type G.* Organic peroxide type G is an organic peroxide which will not detonate in a cavitated state, will not deflagrate at all, shows no effect when heated under confinement, and shows no explosive power. A type G organic

peroxide is not subject to the requirements of this subchapter for organic peroxides of Division 5.2 provided that it is thermally stable (self-accelerating decomposition temperature is 50 °C (122 °F) or higher for a 50 kg (110 pounds) package). An organic peroxide meeting all characteristics of type G except thermal stability and requiring temperature control is classed as a type F, temperature control organic peroxide.

(c) *Procedure for assigning an organic peroxide to a generic type.* An organic peroxide shall be assigned to a generic type based on—

(1) Its physical state (i.e., liquid or solid), in accordance with the definitions for liquid and solid in § 171.8 of this subchapter;

(2) A determination as to its control temperature and emergency temperature, if any, under the provisions of § 173.21(f); and

(3) Performance of the organic peroxide under the test procedures specified in the UN Manual of Tests and Criteria, and the provisions of paragraph (d) of this section.

(d) *Approvals.* (1) An organic peroxide must be approved, in writing, by the Associate Administrator for Hazardous Materials Safety, before being offered for transportation or transported, including assignment of a generic type and shipping description, except for—

(i) An organic peroxide which is identified by technical name in the Organic Peroxides Table in § 173.225(b);

(ii) A mixture of organic peroxides prepared according to § 173.225(c)(5); or

(iii) An organic peroxide which may be shipped as a sample under the provisions of § 173.225(c).

(2) A person applying for an approval must submit all relevant data concerning physical state, temperature controls, and tests results or an approval issued for the organic peroxide by the competent authority of a foreign government.

(e) *Tests.* The generic type for an organic peroxide shall be determined using the testing protocol from Figure 20.1(a) (Classification and Flow Chart Scheme for Organic Peroxides) from the UN Manual of Tests and Criteria.

[Amdt. 173–224, 55 FR 52634, Dec. 21, 1990, as amended at 56 FR 66268, Dec. 20, 1991; Amdt. 173–234, 58 FR 51532, Oct. 1, 1993; Amdt. 173–241, 59 FR 67508, Dec. 29, 1994; Amdt. 173–261, 62 FR 24732, May 6, 1997]

§ 173.129 Class 5, Division 5.2—Assignment of packing group.

All Division 5.2 materials are assigned to Packing Group II in Column 5 of the § 172.101 Table.

§ 173.132 Class 6, Division 6.1—Definitions.

(a) For the purpose of this subchapter, *poisonous material* (Division 6.1) means a material, other than a gas, which is known to be so toxic to humans as to afford a hazard to health during transportation, or which, in the absence of adequate data on human toxicity:

(1) Is presumed to be toxic to humans because it falls within any one of the following categories when tested on laboratory animals (whenever possible, animal test data that has been reported in the chemical literature should be used):

(i) *Oral Toxicity.* A liquid with an LD_{50} for acute oral toxicity of not more than 500 mg/kg or a solid with an LD_{50} for acute oral toxicity of not more than 200 mg/kg.

(ii) *Dermal Toxicity.* A material with an LD_{50} for acute dermal toxicity of not more than 1000 mg/kg.

(iii) *Inhalation Toxicity.* (A) A dust or mist with an LC_{50} for acute toxicity on inhalation of not more than 10 mg/L; or

(B) A material with a saturated vapor concentration in air at 20 °C (68 °F) of more than one-fifth of the LC_{50} for acute toxicity on inhalation of vapors and with an LC_{50} for acute toxicity on inhalation of vapors of not more than 5000 ml/m^3; or

(2) Is an irritating material, with properties similar to tear gas, which causes extreme irritation, especially in confined spaces.

(b) For the purposes of this subchapter—

(1) LD_{50} for acute oral toxicity means that dose of the material administered

to both male and female young adult albino rats which causes death within 14 days in half the animals tested. The number of animals tested must be sufficient to give statistically valid results and be in conformity with good pharmacological practices. The result is expressed in mg/kg body mass.

(2) LD_{50} for acute dermal toxicity means that dose of the material which, administered by continuous contact for 24 hours with the shaved intact skin (avoiding abrading) of an albino rabbit, causes death within 14 days in half of the animals tested. The number of animals tested must be sufficient to give statistically valid results and be in conformity with good pharmacological practices. The result is expressed in mg/kg body mass.

(3) LC_{50} for acute toxicity on inhalation means that concentration of vapor, mist, or dust which, administered by continuous inhalation for one hour to both male and female young adult albino rats, causes death within 14 days in half of the animals tested. If the material is administered to the animals as a dust or mist, more than 90 percent of the particles available for inhalation in the test must have a diameter of 10 microns or less if it is reasonably foreseeable that such concentrations could be encountered by a human during transport. The result is expressed in mg/L of air for dusts and mists or in mL/m^3 of air (parts per million) for vapors. See § 173.133(b) for LC_{50} determination for mixtures and for limit tests.

(i) When provisions of this subchapter require the use of the LC_{50} for acute toxicity on inhalation of dusts and mists based on a one-hour exposure and such data is not available, the LC_{50} for acute toxicity on inhalation based on a four-hour exposure may be multiplied by four and the product substituted for the one-hour LC_{50} for acute toxicity on inhalation.

(ii) When the provisions of this subchapter require the use of the LC_{50} for acute toxicity on inhalation of vapors based on a one-hour exposure and such data is not available, the LC_{50} for acute toxicity on inhalation based on a four-hour exposure may be multiplied by two and the product substituted for the one-hour LC_{50} for acute toxicity on inhalation.

(iii) A solid substance should be tested if at least 10 percent of its total mass is likely to be dust in a respirable range, e.g. the aerodynamic diameter of that particle-fraction is 10 microns or less. A liquid substance should be tested if a mist is likely to be generated in a leakage of the transport containment. In carrying out the test both for solid and liquid substances, more than 90% (by mass) of a specimen prepared for inhalation toxicity testing must be in the respirable range as defined in this paragraph (b)(3)(iii).

(c) For purposes of classifying and assigning packing groups to mixtures possessing oral or dermal toxicity hazards according to the criteria in § 173.133(a)(1), it is necessary to determine the acute LD_{50} of the mixture. If a mixture contains more than one active constituent, one of the following methods may be used to determine the oral or dermal LD_{50} of the mixture:

(1) Obtain reliable acute oral and dermal toxicity data on the actual mixture to be transported;

(2) If reliable, accurate data is not available, classify the formulation according to the most hazardous constituent of the mixture as if that constituent were present in the same concentration as the total concentration of all active constituents; or

(3) If reliable, accurate data is not available, apply the formula:

$$\frac{C_A}{T_A} = \frac{C_B}{T_B} + \frac{C_Z}{T_Z} = \frac{100}{T_M}$$

where:

C = the % concentration of constituent A, B ... Z in the mixture;

T = the oral LD_{50} values of constituent A, B ... Z;

T_M = the oral LD_{50} value of the mixture.

Note to formula in paragraph (c)(3): This formula also may be used for dermal toxicities provided that this information is available on the same species for all constituents. The use of this formula does not take into account any potentiation or protective phenomena.

(d) The foregoing categories shall not apply if the Associate Administrator

for Hazardous Materials Safety has determined that the physical characteristics of the material or its probable hazards to humans as shown by documented experience indicate that the material will not cause serious sickness or death.

[Amdt. 173–224, 55 FR 52634, Dec. 21, 1990, as amended at 56 FR 66268, Dec. 20, 1991; Amdt. 173–234, 58 FR 51532, Oct. 1, 1993; Amdt. 173–261, 62 FR 24732, May 6, 1997; 62 FR 45702, August 28, 1997]

§ 173.133 Assignment of packing group and hazard zones for Division 6.1 materials.

(a) The packing group of Division 6.1 materials shall be as assigned in Column 5 of the § 172.101 Table. When the § 172.101 Table provides more than one packing group or hazard zone for a hazardous material, the packing group and hazard zone shall be determined by applying the following criteria:

(1) The packing group assignment for routes of administration other than inhalation of vapors shall be in accordance with the following table:

Packing Group	Oral toxicity LD_{50} (mg/kg)	Dermal toxicity LD_{50} (mg/kg)	Inhalation toxicity by dusts and mists LC_{50} (mg/L)
I	≤ 5	≤ 40	≤ 0.5
II	> 5, ≤ 50	> 40, ≤ 200	> 0.5, ≤2
III	solids: > 50, ≤ 200; liquids: > 50, ≤ 500	> 200, ≤ 1000	> 2, ≤ 10

(2)(i) The packing group and hazard zone assignments for liquids (see § 173.115(c) of this subpart for gases) based on inhalation of vapors shall be in accordance with the following Table:

Packing Group	Vapor concentration and toxicity
I (Hazard Zone A)	V ≥ 500 LC_{50} and LC_{50} ≤ 200 mL/M³.
I (Hazard Zone B)	V ≥ 10 LC_{50}; LC_{50} ≤ 1000 mL/m³; and the criteria for Packing Group I, Hazard Zone A are not met.
II	V ≥ LC_{50}; LC_{50} ≤ 3000 mL/m³; and the criteria for Packing Group I, are not met.
III	V ≥ .2 LC_{50}; LC_{50} ≤ 5000 mL/m³; and the criteria for Packing Groups I and II, are not met.

Note 1: V is the saturated vapor concentration in air of the material in mL/m³ at 20C° and standard atmospheric pressure.

Note 2: A liquid in Division 6.1 meeting criteria for Packing Group I, Hazard Zones A or B stated in paragraph (a)(2) of this section is a material poisonous by inhalation subject to the additional hazard communication requirements in §§ 172.203(m)(3), 172.313 and Table 1 of § 172.504(e) of this subchapter.

(ii) These criteria are represented graphically in Figure 1:

Figure 1
Inhalation Toxicity: Packing Group and Hazard Zone Borderlines

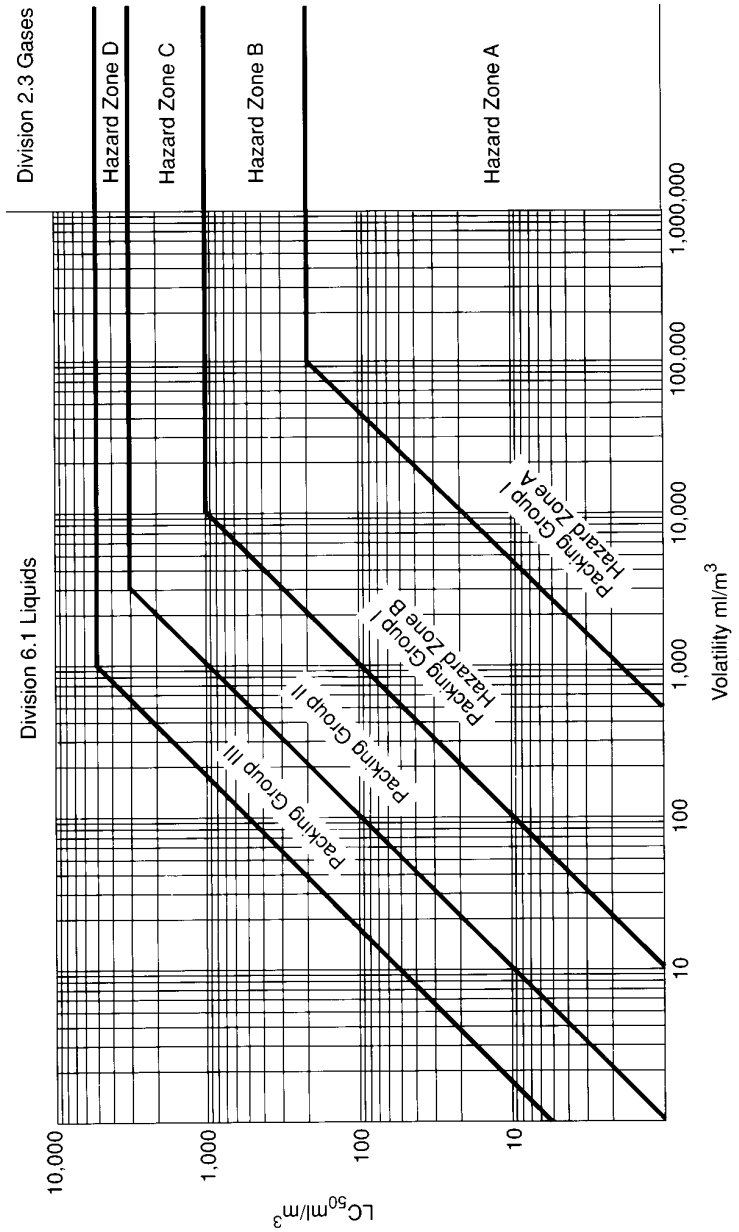

(3) When the packing group determined by applying these criteria is different for two or more (oral, dermal or inhalation) routes of administration, the packing group assigned to the material shall be that indicated for the highest degree of toxicity for any of the routes of administration.

(4) Notwithstanding the provisions of this paragraph, the packing group and hazard zone of a tear gas substance is as assigned in Column 5 of the § 172.101 Table.

(b) The packing group and hazard zone for Division 6.1 mixtures that are poisonous (toxic) by inhalation may be determined by one of the following methods:

(1) Where LC_{50} data is available on each of the poisonous (toxic) substances comprising the mixture—

(i) The LC_{50} of the mixture is estimated using the formula:

$$LC50\ (\text{mixture}) = \frac{1}{\sum_{i=1}^{n} \frac{f_i}{LC50_i}}$$

where f_i=mole fraction of the ith component substance of the liquid.

$LC50_i$=mean lethal concentration of the ith component substance in ml/m³

(ii) The volatility of each component substance is estimated using the formula:

$$V_i = P_i \times \frac{10^6}{101.3}\ \text{ml/m}^3$$

where:

P_i=partial pressure of the *ith* component substance in kPa at 20 °C and one atmospheric pressure. Pi may be calculated according to Raoult's Law using appropriate activity coefficients. Where activity coefficients are not available, the coefficient may be assumed to be 1.0.

(iii) The ratio of the volatility to the LC_{50} is calculated using the formula:

$$R = \sum_{i=1}^{n} \frac{V_i}{L_{c50i}}$$

(iv) Using the calculated values LC50 (mixture) and R, the packing group for the mixture is determined as follows:

Packaging group (hazard zone)	Ratio of volatility and LC_{50}
I (Hazard Zone A) ..	R ≥ 500 and LC_{50} (mixture) ≤ 200 ml/m³.
I (Hazard Zone B) ..	R ≥ 10 and LC_{50} (mixture) ≤ 1000 ml/m³; and the criteria for Packing Group I, Hazard Zone A, are not met.
II	R ≥ 1 and LC_{50} (mixture) ≤ 3000 ml/m³; and the criteria for Packing Group I, Hazard Zones A and B are not met.
III	R ≥ 1/5 and LC_{50} (mixture) ≤ 5000 ml/m³; and the criteria for Packing Group I, Hazard Zones A and B, and Packing Group II are not met.

(2) In the absence of LC50 data on the poisonous (toxic) constituent substances, the mixture may be assigned a packing group and hazard zone based on the following simplified threshold toxicity tests. When these threshold tests are used, the most restrictive packing group and hazard zone must be determined and used for the transportation of the mixture.

(i) A mixture is assigned to Packing Group I, Hazard Zone A only if both the following criteria are met:

(A) A sample of the liquid mixture is vaporized and diluted with air to create a test atmosphere of 200 ml/m³ vaporized mixture in air. Ten albino rats (five male and five female) are exposed to the test atmosphere as determined by an analytical method appropriate for the material being classified for one hour and observed for fourteen days. If five or more of the animals die within the fourteen-day observation period, the mixture is presumed to have an LC50 equal to or less than 200 ml/m³.

(B) A sample of the vapor in equilibrium with the liquid mixture is diluted with 499 equal volumes of air to form a test atmosphere. Ten albino rats (five male and five female) are exposed to the test atmosphere for one hour and observed for fourteen days. If five or more of the animals die within the fourteen-day observation period, the mixture is presumed to have a volatility equal to or greater than 500 times the mixture LC50.

(ii) A mixture is assigned to Packing Group I, Hazard Zone B only if both the following criteria are met, and the mixture does not meet the criteria for Packing Group I, Hazard Zone A:

(A) A sample of the liquid mixture is vaporized and diluted with air to create

a test atmosphere of 1000 ml/m³ vaporized mixture in air. Ten albino rats (five male and five female) are exposed to the test atmosphere for one hour and observed for fourteen days. If five or more of the animals die within the fourteen-day observation period, the mixture is presumed to have an LC50 equal to or less than 1000 ml/m³.

(B) A sample of the vapor in equilibrium with the liquid mixture is diluted with 9 equal volumes of air to form a test atmosphere. Ten albino rats (five male and five female) are exposed to the test atmosphere for one hour and observed for fourteen days. If five or more of the animals die within the fourteen-day observation period, the mixture is presumed to have a volatility equal to or greater than 10 times the mixture LC50.

(iii) A mixture is assigned to Packing Group II only if both the following criteria are met, and the mixture does not meet the criteria for Packing Group I (Hazard Zones A or B):

(A) A sample of the liquid mixture is vaporized and diluted with air to create a test atmosphere of 3000 ml/m³ vaporized mixture in air. Ten albino rats (five male and five female) are exposed to the test atmosphere for one hour and observed for fourteen days. If five or more of the animals die within the fourteen-day observation period, the mixture is presumed to have an LC50 equal to or less than 3000 ml/m³.

(B) A sample of the vapor in equilibrium with the liquid mixture is used to form a test atmosphere. Ten albino rats (five male and five female) are exposed to the test atmosphere for one hour and observed for fourteen days. If five or more of the animals die within the fourteen-day observation period, the mixture is presumed to have a volatility equal to or greater than the mixture LC50.

(iv) A mixture is assigned to Packing Group III only if both the following criteria are met, and the mixture does not meet the criteria for Packing Groups I (Hazard Zones A or B) or Packing Group II (Hazard Zone C):

(A) A sample of the liquid mixture is vaporized and diluted with air to create a test atmosphere of 5000 ml/m³ vaporized mixture in air. Ten albino rats (five male and five female) are exposed to the test atmosphere for one hour and observed for fourteen days. If five or more of the animals die within the fourteen-day observation period, the mixture is presumed to have an LC50 equal to or less than 5000 ml/m³.

(B) The vapor pressure of the liquid mixture is measured and if the vapor concentration is equal to or greater than 1000 ml/m³, the mixture is presumed to have a volatility equal to or greater than ⅕ the mixture LC50.

[Amdt. 173–224, 55 FR 52634, Dec. 21, 1990, as amended at 56 FR 66268–66270, Dec. 20, 1991; 57 FR 45461–45463, Oct. 1, 1992; Amdt. 173–234, 58 FR 51532, Oct. 1, 1993; Amdt. 173–138, 59 FR 49133, Sept. 26, 1994; Amdt. 173–255, 61 FR 50626, Sept. 26, 1996]

§ 173.134 Class 6, Division 6.2—Definitions, exceptions and packing group assignments.

(a) *Definitions.* For the purposes of this subchapter, the categories of materials that constitute Division 6.2 are defined as follows:

(1) An *infectious substance* means a viable microorganism, or its toxin, that causes or may cause disease in humans or animals, and includes those agents listed in 42 CFR 72.3 of the regulations of the Department of Health and Human Services and any other agent that causes or may cause severe, disabling or fatal disease. The terms *infectious substance* and *etiologic agent* are synonymous.

(2) A *diagnostic specimen* means any human or animal material including, but not limited to, excreta, secreta, blood, blood components, tissue, and tissue fluids, being shipped for purposes of diagnosis.

(3) A *biological product* means a material that is prepared and manufactured in accordance with the provisions of 9 CFR part 102 (Licenses for biological products), 9 CFR part 103 (Experimental products, distribution, and evaluation of biological products prior to licensing), 9 CFR part 104 (Permits for biological products), 21 CFR part 312 (Investigational new drug application), or 21 CFR parts 600 to 680 (Biologics).

(4) A *regulated medical waste* means a waste or reusable material, other than

a culture or stock of an infectious substance, that contains an infectious substance and is generated in—

(i) The diagnosis, treatment or immunization of human beings or animals;

(ii) Research pertaining to the diagnosis, treatment or immunization of human beings or animals; or

(iii) The production or testing of biological products.

(b) *Exceptions.* (1) The following are not subject to any requirements of this subchapter if the items as packaged do not contain any material otherwise subject to the requirements of this subchapter:

(i) Biological products;

(ii) Diagnostic specimens;

(iii) Laundry or medical equipment that conforms to 29 CFR 1910.1030 of the regulations of the Occupational Safety and Health Administration of the Department of Labor;

(iv) A material, including waste, that previously contained an infectious substance and has been treated by steam sterilization, chemical disinfection, or other appropriate method, so that it no longer poses the hazard of an infectious substance;

(v) Any waste material, including garbage, trash and sanitary waste in septic tanks, derived from households, including but not limited to single and multiple residences, hotels and motels;

(vi) Corpses, remains and anatomical parts that are intended for ceremonial interment or cremation; and

(vii) Animal waste generated in animal husbandry or food production.

(2) A hazardous waste is not subject to regulation as a regulated medical waste.

(3) A regulated medical waste that is transported by a private or contract carrier is excepted from—

(i) The requirement of an ''INFECTIOUS SUBSTANCE'' label if the outer packaging is marked with a ''BIOHAZARD'' marking in accordance with 29 CFR 1910.1030; and

(ii) For other than a waste culture or stock of an infectious substance, the specific packaging requirements of § 173.197, if packaged in a rigid non-bulk packaging conforming to—

(A) The general packaging requirements of §§ 173.24 and 173.24a; and

(B) Packaging requirements specified in 29 CFR 1910.1030.

(4) A waste culture or stock of infectious substances may be offered for transportation and transported as a regulated medical waste when the culture or stock—

(i) Conforms to Biosafety Level 1, 2 or 3, as defined in HHS Publication No. (CDC) 93–8395, *Biosafety in Microbiological and Biomedical Laboratories.* 3rd Edition, May 1993, Section II;

(ii) Is packaged in accordance with requirements specified in § 173.197; and

(iii) Is transported by a private or contract carrier using a vehicle dedicated to the transportation of medical waste.

(c) *Assignment of packing groups and applicable packaging sections.* (1) Division 6.2 materials, other than regulated medical waste, are not assigned a packing group. Packaging requirements for these materials are prescribed in § 173.196.

(2) Except as otherwise provided, regulated medical waste is assigned to Packing Group II and must be packaged as specified in § 173.197.

[Amdt. 173–247, 60 FR 48787, Sept. 20, 1995, as amended by Amdt. 173–255, 61 FR 50626, Sept. 26, 1996]

§ 173.136 Class 8—Definitions.

(a) For the purpose of this subchapter, ''corrosive material'' (Class 8) means a liquid or solid that causes full thickness destruction of human skin at the site of contact within a specified period of time. A liquid that has a severe corrosion rate on steel or aluminum based on the criteria in § 173.137(c)(2) is also a corrosive material.

(b) If human experience or other data indicate that the hazard of a material is greater or less than indicated by the results of the tests specified in paragraph (a) of this section, RSPA may revise its classification or make the determination that the material is not subject to the requirements of this subchapter.

(c) Skin corrosion test data produced no later than September 30, 1995, using the procedures of Part 173, Appendix A, in effect on September 30, 1995 (see 49 CFR Part 173, Appendix A, revised as of

October 1, 1994) for appropriate exposure times may be used for classification and assignment of packing group for Class 8 materials corrosive to skin.

[Amdt. 173–224, 55 FR 52634, Dec. 21, 1990, as amended at 56 FR 66270, Dec. 20, 1991; Amdt. 173–234, 58 FR 51532, Oct. 1, 1993; Amdt. 173–241, 59 FR 67508, Dec. 29, 1994; Amdt. 173–261, 62 FR 24732, May 6, 1997]

§ 173.137 Class 8—Assignment of packing group.

The packing group of Class 8 material is indicated in Column 5 of the § 172.101 Table. When the § 172.101 Table provides more than one packing group for a Class 8 material, the packing group must be determined using data obtained from tests conducted in accordance with the 1992 OECD Guideline for Testing of Chemicals, Number 404 ''Acute Dermal Irritation/Corrosion'' as follows:

(a) *Packing Group I.* Materials that cause full thickness destruction of intact skin tissue within an observation period of up to 60 minutes starting after the exposure time of three minutes or less.

(b) *Packing Group II.* Materials other than those meeting Packing Group I criteria that cause full thickness destruction of intact skin tissue within an observation period of up to 14 days starting after the exposure time of more than three minutes but not more than 60 minutes.

(c) *Packing Group III.* Materials, other than those meeting Packing Group I or II criteria—

(1) That cause full thickness destruction of intact skin tissue within an observation period of up to 14 days starting after the exposure time of more than 60 minutes but not more than 4 hours; or

(2) That do not cause full thickness destruction of intact skin tissue but exhibit a corrosion rate on steel or aluminum surfaces exceeding 6.25 mm (0.25 inch) a year at a test temperature of 55°C (130°F). For the purpose of testing steel P3 (ISO 9328–1) or a similar type, and for testing aluminum, non-clad types 7075–T6 or AZ5GU-T6 should be used. An acceptable test is described in ASTM G 31–72 (Reapproved 1995).

[Amdt. 173–224, 55 FR 52634, Dec. 21, 1990, as amended at 56 FR 66270, Dec. 20, 1991; Amdt. 173–241, 59 FR 67508, Dec. 29, 1994; Amdt. 173–261, 62 FR 24733, May 6, 1997]

§ 173.140 Class 9—Definitions.

For the purposes of this subchapter, *miscellaneous hazardous material* (Class 9) means a material which presents a hazard during transportation but which does not meet the definition of any other hazard class. This class includes:

(a) Any material which has an anesthetic, noxious or other similar property which could cause extreme annoyance or discomfort to a flight crew member so as to prevent the correct performance of assigned duties; or

(b) Any material that meets the definition in § 171.8 of this subchapter for an elevated temperature material, a hazardous substance, a hazardous waste, or a marine pollutant.

[Amdt. 173–224, 57 FR 45463, Oct. 1, 1992, as amended by Amdt. 173–231, 57 FR 52939, Nov. 5, 1992; Amdt. 173–233, 58 FR 33305, June 16, 1993]

§ 173.141 Class 9—Assignment of packing group.

The packing group of a Class 9 material is as indicated in Column 5 of the § 172.101 Table.

§ 173.144 Other Regulated Materials (ORM)—Definitions.

For the purpose of this subchapter, ''ORM–D material'' means a material such as a consumer commodity, which, although otherwise subject to the regulations of this subchapter, presents a limited hazard during transportation due to its form, quantity and packaging. It must be a material for which exceptions are provided in the § 172.101 Table. Each ORM–D material and category of ORM–D material is listed in the § 172.101 Table.

§ 173.145 Other Regulated Materials—Assignment of packing group.

Packing groups are not assigned to ORM–D materials.

§173.150 Exceptions for Class 3 (flammable) and combustible liquids.

(a) *General.* Exceptions for hazardous materials shipments in the following paragraphs are permitted only if this section is referenced for the specific hazardous material in the §172.101 Table of this subchapter and the material does not meet the definition of another hazard class except Division 6.1, Packing Group III or Class 8, Packing Group III.

(b) *Limited quantities.* Limited quantities of flammable liquids (Class 3) and combustible liquids are excepted from labeling requirements, unless offered for transportation or transported by aircraft, and the specification packaging requirements of this subchapter when packaged in combination packagings according to this paragraph. In addition, shipments of limited quantities are not subject to subpart F (Placarding) of part 172 of this subchapter. Each package must conform to the packaging requirements of subpart B of this part and may not exceed 30 kg (66 pounds) gross weight. The following combination packagings are authorized:

(1) For flammable liquids in Packing Group I, inner packagings not over 0.5 L (0.1 gallon) net capacity each, packed in strong outer packagings;

(2) For flammable liquids in Packing Group II, inner packagings not over 1.0 L (0.3 gallon) net capacity each, packed in strong outer packaging; and

(3) For flammable liquids in Packing Group III and combustible liquids, inner packagings not over 5.0 L (1.3 gallons) net capacity each, packed in strong outer packagings.

(c) *Consumer commodities.* A limited quantity which conforms to the provisions of paragraph (b) of this section and is a ''consumer commodity'' as defined in §171.8 of this subchapter, may be renamed ''Consumer commodity'' and reclassed as ORM–D material. In addition to the exceptions provided by paragraph (b) of this section, shipments of ORM–D materials are not subject to the shipping paper requirements of subpart C of part 172 of this subchapter, unless the material meets the definition of a hazardous substance, a hazardous waste, or a marine pollutant unless offered for transportation or transported by aircraft, and are eligible for the exceptions provided in §173.156.

(d) *Alcoholic beverages.* An alcoholic beverage (wine and distilled spirits as defined in 27 CFR 4.10 and 5.11) is not subject to the requirements of this subchapter if it—

(1) Contains 24 percent or less alcohol by volume;

(2) Is in an inner packaging of five liters or less; or

(3) Is a Packing Group III alcoholic beverage in a packaging of 250 L (66 gallons) or less, unless transported by air.

(e) *Aqueous solutions of alcohol.* An aqueous solution containing 24 percent or less alcohol by volume and no other hazardous material—

(1) May be reclassed as a combustible liquid; and

(2) Is not subject to the requirements of this subchapter if it contains no less than 50 percent water.

(f) *Combustible liquids.* (1) A flammable liquid with a flash point at or above 38 °C (100°F) that does not meet the definition of any other hazard class may be reclassed as a combustible liquid. This provision does not apply to transportation by vessel or aircraft, except where other means of transportation is impracticable.

(2) The requirements in this subchapter do not apply to a material classed as a combustible liquid in a non-bulk packaging unless the combustible liquid is a hazardous substance, a hazardous waste, or a marine pollutant.

(3) A combustible liquid that is in a bulk packaging or a combustible liquid that is a hazardous substance, a hazardous waste, or a marine pollutant is not subject to the requirements of this subchapter except those pertaining to:

(i) Shipping papers, waybills, switching orders, and hazardous waste manifests;

(ii) Marking of packages;

(iii) Display of identification numbers on bulk packages;

(iv) Placarding requirements of subpart F of part 172 of this subchapter;

(v) Carriage aboard aircraft and vessels (for packaging requirements for transport by vessel, see §176.340 of this subchapter);

(vi) Reporting incidents as prescribed by §§ 171.15 and 171.16 of this subchapter;

(vii) Packaging requirements of subpart B of this part and, in addition, non-bulk packagings must conform with requirements of § 173.203; and

(viii) The requirements of §§ 173.1, 173.21, 173.24, 173.24a, 173.24b, 174.1, 177.804, 177.817, and 177.834 of this subchapter.

(4) A combustible liquid that is not a hazardous substance, a hazardous waste, or a marine pollutant is not subject to the requirements of this subchapter if it is a mixture of one or more components that—

(i) Has a flash point at or above 93 °C (200 °F),

(ii) Comprises at least 99 percent of the volume of the mixture, and

(iii) Is not offered for transportation or transported as a liquid at a temperature at or above its flash point.

[Amdt. 173–224, 55 FR 52634, Dec. 21, 1990, as amended at 56 FR 66270, Dec. 20, 1991; 57 FR 45463, Oct. 1, 1992; Amdt. 173–231, 57 FR 52939, Nov. 5, 1992; Amdt. 173–233, 58 FR 33305, June 16, 1993; Amdt. 173–241, 59 FR 67508, Dec. 29, 1994; Amdt. 173–242, 60 FR 26806, May 18, 1995; Amdt. 173–246, 60 FR 49110, Sept. 21, 1995]

§ 173.151 Exceptions for Class 4.

(a) *General.* Exceptions for hazardous materials shipments in the following paragraphs are permitted only if this section is referenced for the specific hazardous material in the § 172.101 Table of this subchapter.

(b) *Limited quantities of Division 4.1 flammable solids.* Limited quantities of flammable solids (Division 4.1) in Packing Groups II and III are excepted from labeling, unless offered for transportation or transported by aircraft, and the specification packaging requirements of this subchapter when packaged in combination packagings according to this paragraph. In addition, shipments of limited quantities are not subject to subpart F (Placarding) of part 172 of this subchapter. Each package must conform to the packaging requirements of subpart B of this part and may not exceed 30 kg (66 pounds) gross weight. The following combination packagings are authorized:

(1) For flammable solids in Packing Group II, inner packagings not over 1.0 kg (2.2 pounds) net capacity each, packed in strong outer packagings; and

(2) For flammable solids in Packing Group III, inner packagings not over 5.0 kg (11 pounds) net capacity each, packed in strong outer packagings.

(c) *Consumer commodities.* A limited quantity which conforms to the provisions of paragraph (b) of this section, and charcoal briquettes in packagings not exceeding 30 kg (66 pounds) gross weight, may be renamed ''Consumer commodity'' and reclassed as ORM–D material, if the material is a ''consumer commodity'' as defined in § 171.8 of this subchapter. In addition to the exceptions provided by paragraph (b) of this section, shipments are not subject to the shipping paper requirements of subpart C of part 172 of this subchapter, unless the material meets the definition of a hazardous substance, a hazardous waste, or a marine pollutant or unless offered for transportation or transported by aircraft, and are eligible for the exceptions provided in § 173.156.

(d) *Limited quantities of Division 4.3 (dangerous when wet) material.* Limited quantities of Division 4.3 (dangerous when wet) solids in Packing Groups II and III are excepted from labeling, unless offered for transportation or transported by aircraft, and the specification packaging requirements of this subchapter when packaged in combination packagings according to this paragraph. In addition, shipments of limited quantities are not subject to subpart F (Placarding) of part 172 of this subchapter. Each package must conform to the packaging requirements of subpart B of this part and may not exceed 30 kg (66 pounds) gross weight. The following combination packagings are authorized:

(1) For Division 4.3 solids in Packing Group II, inner packagings not over 0.5 kg (1.1 pound) net capacity each, packed in strong outer packagings; and

(2) For Division 4.3 solids in Packing Group III, inner packagings not over 1

kg (2.2 pounds) net capacity each, packed in strong outer packagings.

[Amdt. 173–224, 55 FR 52634, Dec. 21, 1990, as amended by Amdt. 173–231, 57 FR 52940, Nov. 5, 1992; Amdt. 173–234, 58 FR 51532, Oct. 1, 1993; Amdt. 173–255, 61 FR 50626, Sept. 26, 1996]

§173.152 Exceptions for Division 5.1 (oxidizers) and Division 5.2 (organic peroxides).

(a) *General.* Exceptions for hazardous materials shipments in the following paragraphs are permitted only if this section is referenced for the specific hazardous material in the §172.101 Table of this subchapter.

(b) *Limited quantities.* Limited quantities of oxidizers (Division 5.1) in Packing Groups II and III and organic peroxides (Division 5.2) are excepted from labeling, unless offered or intended for transportation by aircraft, and the specification packaging requirements of this subchapter when packaged in combination packagings according to this paragraph. In addition, shipments of these limited quantities are not subject to subpart F of part 172 (Placarding) of this subchapter. Each package must conform to the packaging requirements of subpart B of this part and may not exceed 30 kg (66 pounds) gross weight. The following combination packagings are authorized:

(1) For oxidizers in Packing Group II, inner packagings not over 1.0 L (0.3 gallon) net capacity each for liquids or not over 1.0 kg (2.2 pounds) net capacity each for solids, packed in strong outer packagings.

(2) For oxidizers in Packing Group III, inner packagings not over 4.0 L (1 gallon) net capacity each for liquids or not over 5.0 kg (11 pounds) net capacity each for solids, packed in strong outer packagings.

(3) For organic peroxides which do not require temperature control during transportation—

(i) For Type D, E, or F organic peroxides, inner packagings not over 125 ml (4.22 ounces) net capacity each for liquids or 500 g (17.64 ounces) net capacity for solids, packed in strong outer packagings.

(ii) For Type B or C organic peroxides, inner packagings not over 25 ml (0.845 ounces) net capacity each for liquids or 100 g (3.528 ounces) net capacity for solids, packed in strong outer packagings.

(4) For polyester resin kits consisting of a base material component (Class 3, Packing Group II or III) and an activator component (Type C, D, E, or F organic peroxide which does not require temperature control)—

(i) the organic peroxide component must be packed in inner packagings not over 125 ml (4.22 ounces) net capacity each for liquids or 500 g (17.64 ounces) net capacity each for solids;

(ii) The flammable liquid component must be packed in inner packagings not over 1.0 L (0.3 gallons) net capacity each for Packing Group II liquids or 5.0 L (1.3 gallons) net capacity each for Packing Group III liquids; and

(iii) The flammable liquid component and the organic peroxide component may be packed in the same strong outer packaging provided they will not interact dangerously in the event of leakage.

(c) *Consumer commodities.* A limited quantity which conforms to the provisions of paragraph (b) of this section and is a ''consumer commodity'' as defined in §171.8 of this subchapter, may be renamed ''Consumer commodity'' and reclassed as ORM–D material. In addition to the exceptions provided by paragraph (b) of this section, shipments are not subject to the shipping paper requirements of subpart C of part 172 of this subchapter, unless the material meets the definition of a hazardous substance, a hazardous waste, or a marine pollutant or unless offered for transportation or transported by aircraft, and are eligible for the exceptions provided in §173.156.

[Amdt. 173–224, 55 FR 52634, Dec. 21, 1990, as amended by Amdt. 173–231, 57 FR 52940, Nov. 5, 1992; Amdt. 173–241, 59 FR 67508, Dec. 29, 1994; Amdt. 173–261, 62 FR 24733, May 6, 1997]

§173.153 Exceptions for Division 6.1 (poisonous materials).

(a) *General.* Exceptions for hazardous materials shipments in the following paragraphs are permitted only if this section is referenced for the specific hazardous material in the §172.101 Table of this subchapter.

(b) *Limited quantities of Division 6.1 materials.* Limited quantities of poisonous materials (Division 6.1) in Packing Group III are excepted from the specification packaging requirements of this subchapter when packaged in combination packagings according to this paragraph. In addition, shipments of these limited quantities are not subject to subpart F of part 172 (Placarding) of this subchapter. Each package must conform to the packaging requirements of subpart B of this part and may not exceed 30 kg (66 pounds) gross weight. The following combination packagings are authorized:

(1) For poisonous liquids, inner packagings not over 4.0 L (1 gallon) net capacity each, packed in strong outer packagings; and

(2) For poisonous solids, inner packagings not over 5.0 kg (11 pounds) net capacity each, packed in strong outer packagings.

(c) *Consumer commodities.* The following provisions apply to consumer commodities:

(1) A limited quantity which conforms to the provisions of paragraph (b) of this section and is a ''consumer commodity'' as defined in § 171.8 of this subchapter, may be renamed ''Consumer commodity'' and reclassed as ORM–D material.

(2) A poisonous material which is a drug or medicine and is a ''consumer commodity'' as defined in § 171.8 of this subchapter, may be renamed ''Consumer commodity'' and reclassed as ORM–D material if packaged in a combination packaging not exceeding 30 kg (66 pounds) with inner packagings not over 250 ml (8 ounces) net capacity for liquids or 250 g (8.8 ounces) net capacity for solids packed in strong outer packagings. Each package must conform to the packaging requirements of subpart B of this part.

(3) Packages of ORM–D material are excepted from the specification packaging requirements of this subchapter and from the labeling requirements of subpart E of part 172 of this subchapter. Shipments of ORM–D material are eligible for the exceptions provided in § 173.156 and in paragraph (b) of this section and are not subject to the shipping paper requirements of subpart C of part 172 of this subchapter, unless the material meets the definition of a hazardous substance, a hazardous waste, or a marine pollutant or unless offered for transportation or transported by aircraft.

[Amdt. 173–224, 55 FR 52634, Dec. 21, 1990, as amended by Amdt. 173–231, 57 FR 52940, Nov. 5, 1992]

§ 173.154 Exceptions for Class 8 (corrosive materials).

(a) *General.* Exceptions for hazardous materials shipments in the following paragraphs are permitted only if this section is referenced for the specific hazardous material in the § 172.101 Table of this subchapter.

(b) *Limited quantities.* Limited quantities of corrosive materials (Class 8) in Packing Groups II and III are excepted from labeling, unless offered or intended for transportation by aircraft, and the specification packaging requirements of this subchapter when packaged in combination packagings according to this paragraph. In addition, shipments of these limited quantities are not subject to subpart F (Placarding) of part 172 of this subchapter. Each package must conform to the packaging requirements of subpart B of this part and may not exceed 30 kg (66 pounds) gross weight. The following combination packagings are authorized:

(1) For corrosive materials in Packing Group II, in inner packagings not over 1.0 L (0.3 gallon) net capacity each for liquids or not over 1.0 kg (2.2 pounds) net capacity each for solids, packed in strong outer packagings.

(2) For corrosive materials in Packing Group III, in inner packagings not over 4.0 L (1 gallon) net capacity each for liquids or not over 5.0 kg (11 pounds) net capacity each for solids, packed in strong outer packagings.

(c) *Consumer commodities.* A limited quantity which conforms to the provisions of paragraph (b) of this section and is a ''consumer commodity'' as defined in § 171.8 of this subchapter may be renamed ''Consumer commodity'' and reclassed as ORM–D material. In addition to the exceptions provided by paragraph (b) of this section, shipments of ORM–D materials are not subject to the shipping paper requirements

of subpart C of part 172 of this subchapter, unless the material meets the definition of a hazardous substance, a hazardous waste, or a marine pollutant or unless offered or intended for transportation by aircraft, and are eligible for the exceptions provided in §173.156.

(d) *Materials corrosive to aluminum or steel only.* Except for a hazardous substance, a hazardous waste, or a marine pollutant, a material classed as a Class 8, Packing Group III, material solely because of its corrosive effect—

(1) On aluminum is not subject to any other requirements of this subchapter when transported by motor vehicle or rail car in a packaging constructed of materials that will not react dangerously with or be degraded by the corrosive material; or

(2) On steel is not subject to any other requirements of this subchapter when transported by motor vehicle or rail car in a bulk packaging constructed of materials that will not react dangerously with or be degraded by the corrosive material.

[Amdt. 173–224, 55 FR 52634, Dec. 21, 1990, as amended at 56 FR 66270, Dec. 20, 1991; 57 FR 45463, Oct. 1, 1992; Amdt. 173–231, 57 FR 52940, Nov. 5, 1992]

§173.155 Exceptions for Class 9 (miscellaneous hazardous materials).

(a) *General.* Exceptions for hazardous materials shipments in the following paragraphs are permitted only if this section is referenced for the specific hazardous material in the §172.101 Table of this subchapter.

(b) *Limited quantities.* Limited quantities of miscellaneous hazardous materials (Class 9) are excepted from labeling, unless offered or intended for transportation by aircraft, and the specification packaging requirements of this subchapter when packaged in combination packagings according to this paragraph. In addition, shipments of these limited quantities are not subject to subpart F (Placarding) of part 172 of this subchapter. Each package must conform to the packaging requirements of subpart B of this part and may not exceed 30 kg (66 pounds) gross weight. The following combination packagings are authorized:

(1) For liquids, inner packagings not over 5.0 L (1.3 gallons) net capacity each. packed in strong outer packagings.

(2) For solids, inner packagings not over 5.0 kg (11 pounds) net capacity each, packed in strong outer packagings.

(c) *Consumer commodities.* A limited quantity which conforms to the provisions of paragraph (b) of this section and is a ''consumer commodity'' as defined in §171.8 of this subchapter, may be renamed ''Consumer commodity'' and reclassed as ORM–D material. In addition to the exceptions provided by paragraph (b) of this section, shipments of ORM–D materials are not subject to the shipping paper requirements of subpart C of part 172 of this subchapter, unless the material meets the definition of a hazardous substance, a hazardous waste, or a marine pollutant or unless offered for transportation or transported by aircraft, and are eligible for the exceptions provided in §173.156.

[Amdt. 173–224, 55 FR 52634, Dec. 21, 1990, as amended at 56 FR 66270, Dec. 20, 1991; Amdt. 173–231, 57 FR 52940, Nov. 5, 1992; Amdt. 173–253, 61 FR 27174, May 30, 1996]

§173.156 Exceptions for ORM materials.

(a) Exceptions for hazardous materials shipments in the following paragraphs are permitted only if this section is referenced for the specific hazardous material in the §172.101 Table or in a packaging section in this part.

(b) *ORM–D.* Packagings for ORM–D materials are specified according to hazard class in §§173.150 through 173.155 and in §173.306. In addition to other exceptions specified for ORM–D materials in this part:

(1) Strong outer packagings as specified in this part, the marking requirements specified in §172.316 of this subchapter, and the 30 kg (66 pounds) gross weight limitation are not required for materials classed as ORM–D when—

(i) Unitized in cages, carts, boxes or similar overpacks;

(ii) Offered for transportation or transported by:

(A) Rail;

(B) Private or contract motor carrier; or

(C) Common carrier in a vehicle under exclusive use for such service; and

(iii) Transported to or from a manufacturer, a distribution center, or a retail outlet, or transported to a disposal facility from one offeror.

(2) The 30 kg (66 pounds) gross weight limitation does not apply to materials classed as ORM–D when offered for transportation, or transported, by highway or rail between a manufacturer, a distribution center, and a retail outlet provided—

(i) Inner packagings conform to the quantity limits for inner packagings specified in §§173.150(b), 173.152(b), 173.154(b), 173.155(b) and 173.306 (a) and (b), as appropriate;

(ii) The inner packagings are packed into corrugated fiberboard trays to prevent them from moving freely;

(iii) The trays are placed in a fiberboard box which is banded and secured to a wooden pallet by metal, fabric, or plastic straps, to form a single palletized unit;

(iv) The package conforms to the general packaging requirements of subpart B of this part;

(v) The maximum net quantity of hazardous material permitted on one palletized unit is 250 kg (550 pounds); and

(vi) The package is properly marked in accordance with §172.316 of this subchapter.

[Amdt. 173–224, 55 FR 52634, Dec. 21, 1990, as amended at 56 FR 66270, Dec. 20, 1991; 57 FR 45463, Oct. 1, 1992; Amdt. 173–255, 61 FR 50626, Sept. 26, 1996]

Subpart E—Non-bulk Packaging for Hazardous Materials Other Than Class 1 and Class 7

SOURCE: Amdt. 173–224, 55 FR 52643, Dec. 21, 1990, unless otherwise noted.

§ 173.158 Nitric acid.

(a) Nitric acid exceeding 40 percent concentration may not be packaged with any other material.

(b) Nitric acid in any concentration which does not contain sulfuric acid or hydrochloric acid as impurities, when offered for transportation or transported by rail, highway, or water shall be packaged in specification containers as follows:

(1) 1A1 stainless steel drums are authorized, subject to the following limitations:

(i) Stainless steel used in drums must conform to the following thicknesses:

Nominal (marked) capacity (in liters) of 1A1 drum	Minimum thickness (in millimeters) of stainless steel
55	0.9
115	1.2
210	1.5
450	2.0

(ii) Drums weighing less than 85 percent of their original tare weight may not be used.

(iii) Type 304 or other grades of equivalent corrosion-resistant steels in the as-welded condition are permissible for nitric acid concentrations up to and including 78 percent.

(iv) For all concentrations of nitric acid, the following are permissible:

(A) Type 304 heat-treated (quenched in water at 1040 °C (1900 °F)),

(B) Stabilized Type 347 in the as-welded condition,

(C) Stabilized Type 347 stress-relieved (845–900 °C (1550–1650 °F)),

(D) Stabilized Type 347 heat-treated (quenched in water at 1040 °C (1900 °F)), or

(E) Other grades of equivalent corrosion resistance.

(v) All parts of drum exposed to lading must be capable of withstanding the corrosive effect of nitric acid to the extent that 65 percent boiling nitric acid does not penetrate the metal more than 0.0381 mm (0.002 inches) per month. (ASTM A 262–68 may be used for a suitable corrosion test procedure.)

(vi) In addition to marking required by §178.503 of this subchapter, the following marks, in lettering of at least 12.7 mm (0.5 inch) height, must be placed on drums used to transport nitric acid:

(A) The type of steel used in body and head sheets as identified by American Iron and Steel Institute type number, and, in addition, the letters ''HT'' following the steel designation on containers subject to stress relieving or heat treatment during manufacture.

(B) The thickness in millimeters of metal in thinnest part. When the thickness of metal in the body differs

from that in the head, both must be indicated with slanting line between and with the gauge of the body indicated first.

(C) Original tare weight in kilograms, preceded by the letters ''TW.''

An example of the markings required by paragraphs (b)(1)(vi) (A), (B), and (C) of this section is ''304HT/1.9/2.7/TW55.''

(2) 4H1 expanded plastics outer packagings with glass inner receptacles of not greater than 2.5 L (0.66 gallon) capacity each. No more than four 2.5 L (0.66 gallon) inner receptacles may be packed in one outer packaging.

(c) Nitric acid of 80 percent or greater concentration which does not contain sulfuric acid or hydrochloric acid as impurities, when offered for transportation or transported by rail, highway, or water may be packaged in 1B1 aluminum drums.

(d) Nitric acid of 90 percent or greater concentration, when offered for transportation or transported by rail, highway, or water may be packaged as follows:

(1) In 4C1, 4C2, 4D or 4F wooden boxes with inner packagings consisting of glass bottles further individually overpacked in tightly closed metal packagings. Glass bottles must be of 2.5 L (0.66 gallon) or less capacity and cushioned with a non-reactive, absorbent material within the metal packagings.

(2) In combination packagings with 1A2, 1B2, 1D, 1G, 1H2, 3H2 or 4G outer packagings with inner glass packagings of 2.5 L (0.66 gallons) or less capacity cushioned with a non-reactive, absorbent material and packed within a tightly closed intermediate packaging of metal or plastic.

(e) Nitric acid of less than 90 percent concentration, when offered for transportation or transported by rail, highway, or water may be packaged in 4G fiberboard boxes or 4C1, 4C2, 4D or 4F wooden boxes with inside glass packagings of not over 2.5 L (0.66 gallon) capacity each.

(f) Nitric acid of 70 percent or less concentration, when offered for transportation or transported by rail, highway, or water, may be packaged as follows:

(1) In composite packagings 6PA1, 6PA2, 6PB1, 6PB2, 6PC, 6PD1, 6PH1, or 6PH2. 6HH1 and 6HA1 composite packaging with plastic inner receptacles meeting the compatibility requirements §173.24(e) (e.g., PFA Teflon) are authorized.

(2) In 4H1 expanded plastic boxes with inner glass packagings of not over 2.5 L (0.66 gallon) each.

(3) In combination packagings with 1A2, 1B2, 1D, 1G, 1H2, 3H2, 4C1, 4C2, 4D, 4F or 4G outer packagings and plastic inner packagings not over 2.5 L (0.66 gallon) capacity further individually overpacked in tightly closed metal packagings.

(g) Nitric acid of more than 70 percent concentration, when offered for transportation or transported by cargo aircraft only, must be packaged in combination packagings with 1A2, 1B2, 1D, 1G, 1H2, 3H2, 4C1, 4C2, 4D, 4F or 4G outer packagings with glass or earthenware inner packagings of not over 1 L (0.3 gallon) or glass ampoules of not over 0.5 L (0.1 gallon).

(h) Nitric acid of less than 70 percent concentration, when offered for transportation in cargo aircraft only must be packaged in combination packagings with 1A2, 1B2, 1D, 1G, 1H2, 3H2, 4C1, 4C2, 4D, 4F or 4G outer packagings with inner packagings of—

(1) Glass or earthenware not over 2.5 L (0.66 gallon) capacity;

(2) Plastic not over 2.5 L (0.66 gallon) capacity further individually overpacked in tightly closed metal packagings; or

(3) Glass ampoule not over 0.5 L (0.1 gallon) capacity.

[Amdt. 173–224, 55 FR 52643, Dec. 21, 1990, as amended at 56 FR 66270, Dec. 20, 1991; Amdt. 173–241, 59 FR 67509, Dec. 29, 1994; Amdt. 173–255, 61 FR 50626, Sept. 26, 1996]

§ 173.159 Batteries, wet.

(a) Electric storage batteries, containing electrolyte acid or alkaline corrosive battery fluid, must be completely protected so that short circuits will be prevented; they may not be packed with other materials except as provided in §§173.220 and 173.222 of this part and paragraph (h) of this section.

(b) The following specification packagings are authorized for batteries packed without other materials:

(1) 4C1, 4C2, 4D, or 4F wooden boxes.

(2) 4G fiberboard boxes.

(3) 1D plywood drums.

(4) 1G fiber drums.

(5) 1H2 and 3H2 plastic drums and jerricans.

(6) 4H2 plastic boxes.

(c) The following non-specification packagings are authorized for batteries packed without other materials:

(1) Electric storage batteries protected against short circuits and firmly secured to skids or pallets capable of withstanding the shocks normally incident to transportation, are authorized for transportation by rail, highway, or water. The height of the completed unit must not exceed 1½ times the width of the skid or pallet. The unit must be capable of withstanding, without damage, a superimposed weight equal to two times the weight of the unit or, if the weight of the unit exceeds 907 kg (2000 pounds), a superimposed weight of 1814 kg (4000 pounds). Battery terminals must not be relied upon to support any part of the superimposed weight.

(2) Electric storage batteries weighing 225 kg (500 pounds) or more, consisting of carriers' equipment, may be shipped by rail when mounted on suitable skids and protected against short circuits. Such shipments may not be offered in interchange service.

(3) One to three batteries not over 11.3 kg (25 pounds) each, packed in outer boxes. The maximum authorized gross weight is 34 kg (75 pounds).

(4) Not more than four batteries not over 7 kg (15 pounds) each, packed in strong outer fiberboard or wooden boxes. Batteries must be securely cushioned and packed to prevent short circuits. The maximum authorized gross weight is 30 kg (65 pounds).

(5) Not more than five batteries not over 4.5 kg (10 pounds) each, packed in strong outer fiberboard or wooden boxes. Batteries must be securely cushioned and packed to prevent short circuits. The maximum authorized gross weight is 30 kg (65 pounds).

(6) Single batteries not exceeding 34 kg (75 pounds) each, packed in 5-sided slip covers or in completely closed fiberboard boxes. Slip covers and boxes must be of solid or double-faced corrugated fiberboard of at least 91 kg (200 pounds) Mullen test strength. The slip cover or fiberboard box must fit snugly and provide inside top clearance of at least 1.3 cm (0.5 inch) above battery terminals and filler caps with reinforcement in place. Assembled for shipment, the bottom edges of the slipcover must come to within 2.5 cm (1 inch) of the bottom of the battery. The completed package (battery and box or slip cover) must be capable of withstanding a top-to-bottom compression test of at least 225 kg (500 pounds) without damage to battery terminals, cell covers or filler caps.

(7) Single batteries exceeding 34 kg (75 pounds) each may be packed in completely closed fiberboard boxes. Boxes must be of double-wall corrugated fiberboard of at least 181 kg (400 pounds) test, or solid fiberboard testing at least 181 kg (400 pounds); a box may have hand holes in its ends provided that the handholes will not materially weaken the box. Sides and ends of the box must have cushioning between the battery and walls of the box; combined thickness of cushioning material and walls of the box must not be less than 1.3 cm (0.5 inch); and cushioning must be excelsior pads, corrugated fiberboard, or other suitable cushioning material. The bottom of the battery must be protected by a minimum of one excelsior or double-wall corrugated fiberboard pad. The top of the battery must be protected by a wood frame, corrugated trays or scored sheets of corrugated fiberboard having minimum test of 91 kg (200 pounds), or other equally effective cushioning material. Top protection must bear evenly on connectors and/or edges of the battery cover to facilitate stacking of batteries. No more than one battery may be placed in one box. The maximum authorized gross weight is 91 kg (200 pounds).

(d) A nonspillable wet electric storage battery is excepted from all other requirements of this subchapter under the following conditions:

(1) The battery must be protected against short circuits and securely packaged;

(2) For batteries manufactured after September 30, 1995, the battery and the outer packaging must be plainly and durably marked ''NONSPILLABLE'' or ''NONSPILLABLE BATTERY''; and

(3) The battery must be capable of withstanding the following two tests,

without leakage of battery fluid from the battery:

(i) *Vibration test.* The battery must be rigidly clamped to the platform of a vibration machine, and a simple harmonic motion having an amplitude of 0.8 mm (0.03 inches), with a 1.6 mm (0.063 inches) maximum total excursion must be applied. The frequency must be varied at the rate of 1 Hz/min between the limits of 10 Hz to 55 Hz. The entire range of frequencies and return must be traversed in 95±5 minutes for each mounting position (direction of vibrator) of the battery. The battery must be tested in three mutually perpendicular positions (to include testing with fill openings and vents, if any, in an inverted position) for equal time periods.

(ii) *Pressure differential test.* Following the vibration test, the battery must be stored for six hours at 24 °C±4 °C (75 °F±7 °F) while subjected to a pressure differential of at least 88 kPa (13 psi). The battery must be tested in three mutually perpendicular positions (to include testing with fill openings and vents, if any, in an inverted position) for at least six hours in each position.

(e) Electric storage batteries containing electrolyte or corrosive battery fluid are not subject to the requirements of this subchapter for transportation by highway or rail if all of the following requirements are met:

(1) No other hazardous materials may be transported in the same vehicle;

(2) The batteries must be loaded or braced so as to prevent damage and short circuits in transit;

(3) Any other material loaded in the same vehicle must be blocked, braced, or otherwise secured to prevent contact with or damage to the batteries; and

(4) The transport vehicle may not carry material shipped by any person other than the shipper of the batteries.

(f) Electric storage batteries, containing electrolyte or corrosive battery fluid in a coil from which it is injected into the battery cells by a gas generator and initiator assembled with the battery, and which are nonspillable under the criteria of paragraph (d) of this section, are excepted from other requirements of this subchapter when examined by the Bureau of Explosives and approved by the Associate Administrator for Hazardous Materials Safety.

(g) Electrolyte, acid, or alkaline corrosive battery fluid, packed with storage batteries wet or dry, must be packed in one of the following specification packagings:

(1) In 4C1, 4C2, 4D, or 4F wooden boxes with inner receptacles of glass, not over 4.0 L (1 gallon) each with not over 8.0 L (2 gallons) total in each outside container. Inside containers must be well-cushioned and separated from batteries by a strong solid wooden partition. The completed package must conform to Packing Group III requirements.

(2) Electrolyte, acid, or alkaline corrosive battery fluid included with storage batteries and filling kits may be packed in strong plywood or wooden boxes when shipments are made by, for, or to the Departments of the Army, Navy, or Air Force of the United States. Packagings must conform to military specifications. The electrolyte, acid, or alkaline corrosive battery fluid must be packed in polyethylene bottles of not over 1.0 L (0.3 gallon) capacity each. Not more than 24 bottles, securely separated from storage batteries and kits, may be offered for transportation or transported in each package.

(3) In 4G fiberboard boxes with not more than 12 inside packagings of polyethylene or other material resistant to the lading, each not over 2.0 L (0.5 gallon) capacity each. Completed packages must conform to Packing Group III requirements. Inner packagings must be adequately separated from the storage battery. The maximum authorized gross weight is 29 kg (64 pounds). These packages are not authorized for transportation by aircraft.

(h) Dry storage batteries or battery charger devices may be packaged in 4G fiberboard boxes with inner receptacles containing battery fluid. Completed packagings must conform to Packing Group III requirements. Not more than 12 inner receptacles may be packed in

one outer box. The maximum authorized gross weight is 34 kg (75 pounds).

[Amdt. 173–224, 55 FR 52643, Dec. 21, 1990, as amended at 56 FR 66270, Dec. 20, 1991; 57 FR 45463, Oct. 1, 1992; Amdt. 173–235, 58 FR 50502, Sept. 27, 1993; Amdt. 173–234, 58 FR 51532, Oct. 1, 1993; Amdt. 173–246, 60 FR 49110, Sept. 21, 1995]

§ 173.160 Bombs, smoke, non-explosive (corrosive).

Bombs, smoke, non-explosive' may be shipped provided they are without ignition elements, bursting charges, detonating fuses or other explosive components. They must be packaged in wooden (4C1, 4C2), plywood (4D) or reconstituted wood (4F) boxes, or plywood drums (1D), which meet Packing Group II requirements.

§ 173.161 Chemical kits.

(a) Except as otherwise provided, chemical kits must be packed, marked, and labeled as prescribed by this subchapter for the specific corrosive materials contained therein.

(b) Chemical kits containing limited quantities of corrosive liquids in inner receptacles of not over 177 ml (6 fluid ounces) capacity each are excepted from labeling (except when offered for transportation or transported by air) and the specification packaging requirements of this subchapter if all of the following requirements are met:

(1) The kit may contain only corrosive liquids for which packaging exceptions are provided in the § 172.101 Table.

(2) This kit must be a strong wooden or metal outer packaging, or must be packed in a strong wooden or metal packaging.

(3) The corrosive liquids must be cushioned with sufficient absorbent material to completely absorb the contents of the individual containers, and must be protected from damage by other materials in the kit.

(4) The contents of the kit must be of a nature and packed so there will be no possibility of the mixture of contents causing dangerous evolution of heat or gas.

In addition, chemical kits meeting these requirements are not subject to subpart F of part 172 of this subchapter (Placarding), to part 174 (Carriage by rail) of this subchapter except § 174.24 (Shipping papers), and to part 177 (Carriage by highway) of this subchapter except § 177.817 (Shipping papers).

(c) Except as provided in paragraph (b) of this section, chemical kits must be packed in 4G fiberboard boxes with inner glass receptacles of not over 1 L (0.3 gallon) capacity each, securely cushioned and separated from other inside containers. The contents of the kit must be of such a nature and so packed that there will be no possibility of the mixture of contents causing dangerous evolution of heat or gas.

§ 173.162 Gallium.

Gallium metal must be packaged in packagings intended to contain liquids consisting of semi-rigid plastic inner packagings of not more than 2.5 kg (5.5 pounds) net capacity each, individually enclosed in a sealed leak-tight bag of strong puncture-resistant material. The sealed bags must be packed in wooden (4C1, 4C2), plywood (4D), reconstituted wood (4F), fiberboard (4G) or plastic (4H1, 4H2) boxes or in fiber (1G) or steel (1A2) drums, which are lined with leak-tight, puncture-resistant material. Bags and liner material must be chemically resistant to gallium. In order to maintain the gallium in a completely solid state, the above packaging may be overpacked in a strong, water-resistant outer packaging which contains dry ice or other means of refrigeration. If a refrigerant is used, all of the above materials used in the packaging of gallium must be chemically and physically resistant to the refrigerant and must have impact resistance at the low temperatures of the refrigerant employed. If dry ice is used, the outer packaging must permit the release of carbon dioxide gas. Completed packaging must meet Packing Group I requirements for transportation by aircraft and Packing Group III requirements for transportation by vessel. Manufactured articles or apparatuses, each containing not more than 100 mg (0.0035 ounce) of gallium and packaged so that the quantity of gallium per package does not exceed 1 g (0.35 ounce) are not subject to the requirements of this subchapter.

[Amdt. 173–224, 55 FR 52643, Dec. 21, 1990, as amended by Amdt. 173–261, 62 FR 24733, May 6, 1997]

§ 173.163 Hydrogen fluoride.

Hydrogen fluoride (hydrofluoric acid, anhydrous) must be offered for transportation or transported in Specification 3, 3A, 3AA, 3B, 3BN, 3C, 3E, 4, 4A, 25, or 38 cylinders; or Specification 4B, 4BA, 4BW or 4C cylinders, if they are not brazed. Filling density must not exceed 85 percent of the water weight capacity of the cylinder. Cylinders used exclusively in this service may, in lieu of the periodic hydrostatic retest required by § 173.34(e), be given a complete external visual inspection as described in CGA Pamphlet C–6, at the time such periodic retest becomes due. Such inspections shall be made on cylinders cleaned to bare metal. The results shall be recorded on a data sheet, completed copies of which shall be kept as prescribed in § 173.34(e)(8). Items which must be checked and recorded on these data sheets are: Date of inspection (month and year); DOT specification number; cylinder identification (registered symbol and serial number, date of manufacture, and if needed for adequate identification, ownership symbol); tare weight; physical condition (record specifically any leakage, corrosion, gouges, dents or digs in shell or heads, broken or damaged footring or protective ring or fire damage); disposition of cylinders (returned to service, to cylinder manufacturer for repairs, or scrapped). A cylinder which passes the inspection prescribed must have the data recorded in the manner presently prescribed for the recording of the retest date except that an ''E'' is to follow the date (month and year) indicating requalification by the external inspection method. Cylinders removed from this service for any reason must be rendered unfit for any other regulated service.

[Amdt. 173–224, 55 FR 52643, Dec. 21, 1990, as amended by Amdt. 173–236, 58 FR 50236, Sept. 24, 1993; Amdt. 173–251, 61 FR 26763, May 28, 1996]

§ 173.164 Mercury (metallic and articles containing mercury).

(a) For transportation by aircraft, mercury must be packaged in packagings which meet the requirements of part 178 of this subchapter at the Packing Group I performance level, as follows:

(1) Earthenware or glass or suitable plastic inner packagings of not more than 3.5 kg (7.7 pounds) capacity each, packed in steel drums (1A2), steel jerricans (3A2), wooden (4C1, 4C2), plywood (4D), fiberboard (4G) or reconstituted wood (4F) or solid plastic (4H2) boxes, plywood drums (1D) or fiber drums (1G) with sufficient cushioning material to prevent breakage. Either the inner packagings or the outer packagings must have inner linings or bags of strong leakproof and puncture-resistant material impervious to mercury, completely surrounding the contents, which will prevent the escape of mercury from the package irrespective of its position.

(2) Iron or steel ''quicksilver flasks'' of not more than 3.5 kg (7.7 pounds) capacity each packaged in steel drums (1A2), steel jerricans (3A2), wooden (4C1, 4C2), plywood (4D), fiberboard (4G), reconstituted wood (4F) or solid plastic (4H2) boxes, plywood drums (1D) or fiber drums (1G) with leakproof linings as in paragraph (a)(1) of this section.

(3) Welded steel bottles with inner vaulted bottoms as single packagings. The closure must be a bolt with a conical thread, and the opening must not exceed 20 mm (0.79 inches). The maximum net mass must not exceed 35 kg (77 pounds).

(b) Manufactured articles or apparatuses, each containing not more than 100 mg (0.0035 ounce) of mercury and packaged so that the quantity of mercury per package does not exceed 1 g (0.035 ounce) are not subject to the requirements of this subchapter.

(c) Manufactured articles or apparatuses containing not more than 100 mg (0.0035 ounce) mercury are excepted from the specification packaging requirements of this subchapter when packaged as follows:

(1) Manufactured articles or apparatuses of which metallic mercury is a component part, such as manometers, pumps, thermometers, switches, etc. (for electron tubes, mercury vapor tubes and similar tubes, see paragraph (c)(3) of this section), must be in strong outer packagings, having sealed inner liners or bags of strong leakproof and puncture-resistant material impervious to mercury, which will

prevent the escape of mercury from the package irrespective of its position. Mercury switches and relays are excepted from these packaging requirements, if they are totally enclosed, leakproof and in sealed metal or plastic units.

(2) Thermometers, switches and relays, each containing a total quantity of not more than 15 g (0.53 ounces) of mercury, are excepted from the requirements of this subchapter if installed as an integral part of a machine or apparatus and so fitted that shock of impact damage, leading to leakage of mercury, is unlikely to occur under conditions normally incident to transport.

(3) Electron tubes, mercury vapor tubes and similar tubes must be packaged as follows:

(i) Tubes which are packed in strong outer packagings with all seams and joints sealed with self-adhesive, pressure-sensitive tape which will prevent the escape of mercury from the package, are authorized up to a total net quantity of 450 g (15.9 ounces) of mercury per package;

(ii) Tubes with more than 450 g (15.9 ounces) of mercury are authorized only when packed in strong outer packagings, having sealed inner liners or bags of strong leakproof and puncture-resistant material impervious to mercury which will prevent escape of mercury from the package irrespective of its position;

(iii) Tubes which do not contain more than 5 g (0.2 ounce) of mercury each and which are packed in the manufacturer's original packagings, are authorized up to a total net quantity of 30 g (1.1 ounces) of mercury per package;

(iv) Tubes which are completely jacketed in sealed leakproof metal cases are authorized in the manufacturer's original packagings.

(4) A person offering for transportation electron tubes, mercury vapor tubes, and similar tubes shall indicate the quantity of mercury therein on the shipping paper.

(5) Mercurial barometers conforming to paragraph (c)(1) of this section, which are loaded and unloaded from an aircraft under the supervision of, and accompanied in flight by, a National Weather Service official or similar United States agency official, are excepted from any other requirements of this subchapter.

(d) For transportation by other than aircraft, mercury must be packaged—

(1) In any packaging which meets the requirements of part 178 of this subchapter at the Packing Group III performance level; or

(2) In non-specification reusable metal packagings.

(e) Except for a hazardous substance or a hazardous waste or for transportation by aircraft or vessel, packages containing less than 0.45 kg (1.0 pound) net weight of mercury are not subject to the requirements of this subchapter.

[Amdt. 173–224, 55 FR 52643, Dec. 21, 1990, as amended at 56 FR 66270, Dec. 20, 1991; Amdt. 173–241, 59 FR 67509, Dec. 29, 1994; Amdt. 173–246, 60 FR 49110, Sept. 21, 1995]

§ 173.166 Air bag inflators, air bag modules and seat-belt pretensioners.

(a) *Definitions*. An *air bag inflator* (consisting of a casing containing an igniter, a booster material and a gas generant) is a gas generator used to inflate an air bag in a supplemental restraint system in a motor vehicle. An *air bag module* is the air bag inflator plus an inflatable bag assembly. A seat-belt pre-tensioner contains similar hazardous materials and is used in the operation of a seat-belt restraining system in a motor vehicle.

(b) *Classification*. An air bag inflator, air bag module, or seat-belt pre-tensioner may be classed as Class 9 only if it meets the following requirements—

(1) The manufacturer has submitted each design type air bag inflator or seat-belt pre-tensioner to a person approved by the Associate Administrator for Hazardous Materials Safety for examination and testing. The submission must contain a detailed description of the inflator or pre-tensioner (or, if more than a single inflator or pre-tensioner is involved, the maximum parameters of each particular inflator or pre-tensioner design type for which approval is sought) and details on the complete package.

(2) Samples of the inflator or pre-tensioner, packaged as for transport, have been subjected to test series 6(c)

of the UN Recommendations on the Transport of Dangerous Goods, Manual of Tests and Criteria, second revised edition, 1995 with no explosion of the device, no fragmentation of device casings, and no projection hazard or thermal effect which would significantly hinder fire-fighting or other emergency response efforts in the immediate vicinity.

(3) The manufacturer submits an application, including—

(i) The test results and report recommending the shipping description and classification for each device or design type; or

(ii) An approved classification issued by the competent authority of a foreign government, to the Associate Administrator for Hazardous Materials Safety, and is notified in writing by the Associate Administrator that the device has been classed as Class 9 and approved for transportation.

(4) No approval applications are required for air bag modules containing an approved air bag inflator.

(5) Air bag inflators or seat belt pretensioners previously reclassed from Class 1 to Division 4.1 under the terms of an exemption may be reclassed as Class 9 materials without further testing.

(c) *EX numbers.* When offered for transportation, the shipping paper must contain the EX number or product code for each approved inflator or pre-tensioner in association with the basic description required by § 172.202(a) of this subchapter. Product codes must be traceable to the specific EX number assigned to the inflator or pretensioner by the Associate Administrator for Hazardous Materials Safety. A module must be identified with the same EX number or product code of the approved inflator.

(d) *Exceptions.* (1) An air bag module or seat-belt pretensioner that has been approved by the Associate Administrator for Hazardous Materials Safety and is installed in a motor vehicle or in completed vehicle components, such as steering columns or door panels, is not subject to the requirements of this subchapter.

(2) An air bag module, containing an inflator that has previously been examined and approved for transportation as a Division 4.1 material, is not required to be submitted for examination or approval.

(e) *Packagings.* The following packagings are authorized:

(1) 1A2, 1B2, 1G or 1H2 drums.

(2) 3A2 or 3H2 jerricans.

(3) 4C1, 4C2, 4D, 4F, 4G or 4H2 boxes.

(4) Reusable high strength plastic or metal containers or dedicated handling devices are authorized for shipment of air bag inflators, air bag modules, and seat-belt pretensioners from a manufacturing facility to the assembly facility, subject to the following conditions:

(i) The gross weight of the container or handling device may not exceed 1000 kg (2205 pounds). The container or handling device structure must provide adequate support to allow them to be stacked at least three high with no damage to the containers or devices.

(ii) If not completely enclosed by design, the container or handling device must be covered with plastic, fiberboard, or metal. The covering must be secured to the container by banding or other comparable methods.

(iii) Internal dunnage must be sufficient to prevent movement of the devices within the container.

(f) *Labeling.* Notwithstanding the provisions of § 172.402 of this subchapter, each package or handling device must display a CLASS 9 label. Additional labeling is not required when the package contains no hazardous materials other than the devices.

[Amdt. 173–230, 57 FR 1878, Jan. 16, 1992, as amended by Amdt. 173–241, 59 FR 67509, Dec. 29, 1994; Amdt. 173–261, 62 FR 24733, May 6, 1997; 62 FR 51560, Oct. 1, 1997]

§ 173.170 Black powder for small arms.

Black powder for small arms that has been classed in Division 1.1 may be reclassed as a Division 4.1 material, for domestic transportation by motor vehicle, rail freight, and cargo vessel only, subject to the following conditions:

(a) The powder must be examined and approved for Division 1.1 and Division 4.1 classification in accordance with §§ 173.56 and 173.58;

(b) The total quantity of black powder in one motor vehicle, rail car, or freight container may not exceed 45.4 kg (100 pounds) net mass, and no more

than four freight containers may be on board one cargo vessel;

(c) The black powder must be packed in inner metal or heavy wall conductive plastic receptacles not over 454 g (16 ounces) net capacity each, with no more than 25 cans in one outer UN 4G fiberboard box. The inner packagings must be arranged and protected so as to prevent simultaneous ignition of the contents. The complete package must be of the same type which has been examined as required in § 173.56;

(d) Each completed package must be marked ''BLACK POWDER FOR SMALL ARMS'' and ''NA 0027''; and

(e) Each package must bear the FLAMMABLE SOLID label.

[Amdt. 173–255, 61 FR 50626, Sept. 26, 1996, as amended at Amdt. 173–255, 62 FR 14338, Mar. 26, 1997]

§ 173.171 Smokeless powder for small arms.

Smokeless powder for small arms which has been classed in Division 1.3 may be reclassed in Division 4.1, for transportation by motor vehicle, rail car, vessel, or cargo-only aircraft, subject to the following conditions:

(a) The powder must be examined and approved for a Division 1.3 and Division 4.1 classification in accordance with §§ 173.56 and 173.58 of this part.

(b) The total quantity of smokeless powder may not exceed 45.4 kg (100 pounds) net mass in:

(1) One rail car, motor vehicle, or cargo-only aircraft; or

(2) One freight container on a vessel, not to exceed four freight containers per vessel.

(c) Only combination packagings with inner packagings not exceeding 3.6 kg (8 pounds) net mass are authorized. Inner packagings must be arranged and protected so as to prevent simultaneous ignition of the contents. The complete package must be of the same type which has been examined as required in § 173.56 of this part.

(d) Inside packages that have been examined and approved by the Associate Administrator for Hazardous Materials Safety may be packaged in UN 4G fiberboard boxes meeting the Packing Group I performance level, provided all inside containers are packed to prevent movement and the net weight of smokeless powder in any one box does not exceed 7.3 kg (16 pounds).

[Amdt. 173–224, 55 FR 52643, Dec. 21, 1990, as amended at 56 FR 66270, Dec. 20, 1991; Amdt. 173–241, 59 FR 67509, Dec. 29, 1994; Amdt. 173–253, 61 FR 27174, May 30, 1996]

§ 173.172 Aircraft hydraulic power unit fuel tank.

Aircraft hydraulic power unit fuel tanks containing a mixture of anhydrous hydrazine and monomethyl hydrazine (M86 fuel) and designed for installation as complete units in aircraft are excepted from the specification packaging requirements of this subchapter when they conform to either of the following conditions:

(a) The unit must consist of an aluminum pressure vessel made from tubing and having welded heads. Primary containment of the fuel within this vessel must consist of a welded aluminum bladder having a maximum internal volume of 46 L (12 gallons). The outer vessel must have a minimum design gauge pressure of 1.275 kPa (185 psi) and a minimum burst gauge pressure of 2,755 kPa (400 psi). Each vessel must be leak-checked during manufacture and before shipment and must be found leakproof. The complete inner unit must be securely packed in noncombustible cushioning material, such as vermiculite, in a strong outer tightly closed metal packaging which will adequately protect all fittings. Maximum quantity of fuel per unit and package is 42 L (11 gallons); or

(b) The unit must consist of an aluminum pressure vessel. Primary containment of the fuel within this vessel must consist of a welded hermetically sealed fuel compartment with an elastomeric bladder having a maximum internal volume of 46 L (12 gallons). The pressure vessel must have a minimum design gauge pressure of 5,170 kPa (750 psi). Each vessel must be leak-checked during manufacture and before shipment and must be securely packed in non-combustible cushioning material, such as vermiculite, in a strong outer tightly closed metal packaging which will adequately protect all fittings. Maximum quantity of fuel per unit and package is 42 L (11 gallons).

§173.173 Paint, paint-related material, adhesives, ink and resins.

(a) When the §172.101 Table specifies that a hazardous material be packaged under this section, the following requirements apply. Except as otherwise provided in this part, the description ''Paint'' is the proper shipping name for paint, lacquer, enamel, stain, shellac, varnish, liquid aluminum, liquid bronze, liquid gold, liquid wood filler, and liquid lacquer base. The description ''Paint-related material'' is the proper shipping name for a paint thinning, drying, reducing or removing compound. However, if a more specific description is listed in the §172.101 Table of this subchapter, that description must be used.

(b) Paint, paint-related material, adhesives, ink and resins must be packaged as follows:

(1) As prescribed in §173.202 of this part if it is a Packing Group II material or §173.203 of this part if it is a Packing Group III material; or

(2) In inner glass packagings of not over 1 L (0.3 gallon) capacity each or inner metal packagings of not over 5 L (1 gallon) each, packed in a strong outer packaging. Packages must conform to the packaging requirements of subpart B of this part but need not conform to the requirements of part 178 of this subchapter.

[Amdt. 173–224, 55 FR 52643, Dec. 21, 1990, as amended at 56 FR 66270, Dec. 20, 1991; Amdt. 173–241, 59 FR 67509, Dec. 29, 1994]

§173.174 Refrigerating machines.

A refrigerating machine assembled for shipment and containing 7 kg (15 pounds) or less of a flammable liquid for its operation in a strong, tight receptacle is excepted from labeling (except when offered for transportation or transported by air) and the specification packaging requirements of this subchapter. In addition. shipments are not subject to subpart F of part 172 of this subchapter (Placarding), to part 174 of this subchapter (Carriage by rail) except §174.24 (Shipping papers) and to part 177 (Carriage by highway) of this subchapter except §177.817 (Shipping papers).

§173.181 Pyrophoric materials (liquids).

When the §172.101 Table specifies that a hazardous material be packaged under this section, only the following non-bulk packagings are authorized:

(a) Specification steel or nickel cylinders prescribed for any compressed gas except acetylene having a minimum design pressure of 1206 kPa (175 psi). Cylinders with valves must be:

(1) Equipped with steel valve protection caps or collars, unless overpacked; or

(2) Overpacked in a wooden box (4C1, 4C2, 4D or 4F); fiberboard box (4G), or plastic box (4H1 or 4H2). Cylinders must be secured to prevent movement in the box and, when offered for transportation or transported, must be so loaded that pressure relief devices remain in the vapor space of the cylinder. (See §§173.34(d)(7), 174.430 and 177.838(h) of this subchapter.)

(b) Wooden boxes (4C1, 4C2, 4D, or 4F) or fiberboard boxes (4G) enclosing not more than four strong, tight metal cans with inner receptacles of glass or metal, not over 1 L (0.3 gallon) capacity each, having positive screwcap closures adequately gasketed. Inner packagings must be cushioned on all sides with dry, absorbent, incombustible material in a quantity sufficient to absorb the entire contents. The strong, tight metal cans must be closed by positive means, not by friction.

(c) Steel drums (1A2) or fiber drums (1G) not exceeding 220 L (58 gallons) capacity each with strong tight inner metal cans not over 4.0 L (1 gallon) capacity each, closed by positive means, not friction.

(1) Inner packagings must have no opening exceeding 25 mm (1 inch) diameter and must be surrounded with noncombustible cushioning material.

(2) Net quantity of pyrophoric liquids may not exceed two-thirds of the rated capacity of the outer drum. For example, a 220 L (58 gallons) outer drum may contain no more than 147 L (39 gallons) of pyrophoric liquids.

(3) Each layer of inner containers must be separated by a metal plate separator in addition to cushioning material.

[Amdt. 173–224, 55 FR 52643, Dec. 21, 1990, as amended at 56 FR 66270, Dec. 20, 1991]

§ 173.182 Barium azide—50 percent or more water wet.

Barium azide—50 percent or more water wet, must be packed in wooden boxes (4C1, 4C2, 4D, or 4F) or fiber drums (1G) with inner glass packagings not over 0.5 kg (1.1 pounds) capacity each. Packagings must have rubber stoppers wire tied for securement. If transportation is to take place when and where freezing weather is possible, a suitable antifreeze solution must be used to prevent freezing. Each packaging must conform to the requirements of part 178 of this subchapter at the Packing Group I performance level.

§ 173.183 Nitrocellulose base film.

Films, nitrocellulose base, must be packaged in packagings conforming to the requirements of part 178 of this subchapter at the Packing Group III performance level, as follows:

(a) In steel drums (1A2), aluminum drums (1B2), steel jerricans (3A2), wooden (4C1, 4C2), plywood (4D) or reconstituted wood (4F) boxes or plywood drums (1D) with each reel in a tightly closed metal can, polypropylene canister, or strong cardboard or fiberboard inner packaging with cover held in place by adhesive tape or paper; or

(b) In fiberboard (4G) boxes or fiber drums (1G) with a single tightly closed metal can, polypropylene canister, or strong cardboard or fiberboard inner packaging with cover held in place by adhesive tape or paper; authorized only for not over 600 m (1969 feet) of film.

[Amdt. 173–224, 55 FR 52643 Dec. 21, 1990, as amended by Amdt. 173–255, 61 FR 50627, Sept. 26, 1996]

§ 173.184 Highway or rail fusee.

(a) A fusee is a device designed to burn at a controlled rate and to produce visual effects for signaling purposes. The composition of the fusee must be such that the fusee will not ignite spontaneously or undergo marked decomposition when subjected to a temperature of 75 °C (167 °F) for 48 consecutive hours.

(b) Fusees (highway and railway) must be packaged in steel drums (1A2), steel jerricans (3A2), wooden (4C1, 4C2), plywood (4D) or reconstituted wood (4F) boxes or in fiberboard boxes (4G), plywood (1D) or fiber (1G) drums. If the fusees are equipped with spikes packagings must have reinforced ends to prevent penetration of spikes through the outer packagings; packages must be capable of passing drop test requirements (§ 178.603 of this subchapter), including at least one drop with spike in a downward position, and other requirements of part 178 of this subchapter, at the Packing Group II performance level.

§ 173.185 Lithium batteries and cells.

(a) Except as otherwise provided in this subpart, a lithium cell or battery is authorized for transportation only if it conforms to the provisions of this section.

(b) *Exceptions.* Cells and batteries are not subject to the requirements of this subchapter if they meet the following requirements:

(1) Each cell with a liquid cathode may contain no more than 0.5 g of lithium or lithium alloy, and each cell with a solid cathode may contain no more than 1.0 g lithium or lithium alloy;

(2) Each battery with a liquid cathode may contain an aggregate quantity of no more than 1.0 g lithium or lithium alloy, and each battery with a solid cathode may contain an aggregate quantity of no more than 2.0 g of lithium or lithium alloy;

(3) Each cell or battery containing a liquid cathode must be hermetically sealed;

(4) Cells and batteries must be packed in such a way so as to prevent short circuits and must be packed in strong packagings, except when installed in equipment; and

(5) If a liquid cathode battery contains more than 0.5 g of lithium or lithium alloy or a solid cathode battery contains more than 1.0 g lithium or lithium alloy, it may not contain a liquid or gas that is a hazardous material according to this subchapter unless the liquid or gas, if free, would be completely absorbed or neutralized by other materials in the battery.

(c) Cells and batteries also are not subject to this subchapter if they meet the following requirements:

(1) Each cell contains not more than 5 g of lithium or lithium alloy;

(2) Each battery contains not more than 25 g of lithium or lithium alloy;

(3) Each cell or battery is of the type proven to be non-dangerous by testing in accordance with tests in the UN Manual of Tests and Criteria, such testing must be carried out on each type prior to the initial transport of that type; and

(4) Cells and batteries are designed or packed in such a way as to prevent short circuits under conditions normally encountered in transportation.

(d) Cells and batteries and equipment containing cells and batteries which were first transported prior to January 1, 1995, and were assigned to Class 9 on the basis of the requirements of this subchapter in effect on October 1, 1993, may continue to be transported in accordance with the applicable requirements in effect on October 1, 1993.

(e) Cells and batteries may be transported as items of Class 9 if they meet the requirements in paragraphs (e)(1) through (e)(9) of this section:

(1) Cells must not contain more than 12 g of lithium or lithium alloy.

(2) Batteries must not contain more than 500 g of lithium or lithium alloy.

(3) Each cell and battery must be equipped with an effective means of preventing external short circuits.

(4) Each cell and battery must incorporate a safety venting device or be designed in a manner that will preclude a violent rupture under conditions normally incident to transportation.

(5) Batteries containing cells or series of cells connected in parallel must be equipped with diodes to prevent reverse current flow.

(6) Cells and batteries must be packed in strong inner packagings containing not more than 500 g of lithium or lithium alloy per inner packaging.

(7) Cells and batteries must be packed in inner packagings in such a manner as to effectively prevent short circuits and to prevent movement which could lead to short circuits.

(8) Cells and batteries must be packaged in packagings conforming to the requirements of part 178 of this subchapter at the Packing Group II performance level: Inner packagings must be packed within metal boxes (4A or 4B), wooden boxes (4C1, 4C2, 4D,or 4F), fiberboard boxes (4G), solid plastic boxes (4H2), fiber drums (1G), metal drums (1A2 or 1B2), plywood drums (1D), plastic jerricans (3H2), or metal jerricans (3A2 or 3B2).

(9) Each cell or battery must be of the type proven to meet the criteria of Class 9 by testing in accordance with tests in the UN Manual of Tests and Criteria.

(10) Except as provided in paragraph (h) of this section, cells or batteries may not be offered for transportation or transported if any cell has been discharged to the extent that the open circuit voltage is less than two volts or is less than ⅔ of the voltage of the fully charged cell, whichever is less.

(f) Equipment containing or packed with cells and batteries meeting the requirements of paragraph (b) or (c) of this section is excepted from all other requirements of this subchapter.

(g) Equipment containing or packed with cells and batteries may be transported as items of Class 9 if the batteries and cells meet all the requirements of paragraph (e) of this section and are packaged as follows:

(1) Equipment containing cells and batteries must be packed in a strong outer packaging that is waterproof or is made waterproof through the use of a liner unless the equipment is made waterproof by nature of its construction. The equipment must be secured within the outer packaging and be packed as to effectively prevent movement, short circuits, and accidental operation during transport; and

(2) Cells and batteries packed with equipment must be packed in inner packagings conforming to paragraph (e)(8) of this section in such a manner as to effectively prevent movement and short circuits. The quantity of lithium contained in any piece of equipment must not exceed 12 g per cell and 500 g per battery. Not more than 5 kg of cells and batteries may be packed with each item of equipment.

(h) Cells and batteries, for disposal, may be offered for transportation or transported to a permitted storage facility and disposal site by motor vehicle when they meet the following requirements:

(1) Cells, when new, may not contain more than 12 g and batteries may not

contain more than 500 g of lithium or lithium alloy;

(2) Be equipped with an effective means of preventing external short circuits; and

(3) Be packed in a strong outer packaging conforming to the requirements of §§ 173.24 and 173.24a. The packaging need not conform to performance requirements of part 178 of this subchapter.

(i) Cells and batteries and equipment containing or packed with cells and batteries which do not comply with the provisions of this section may be transported only if they are approved by the Associate Administrator for Hazardous Materials Safety.

(j) For testing purposes, when not contained in equipment, cells containing not more than 12 g of lithium or lithium alloy and batteries containing not more than 500 g of lithium or lithium alloy may be offered for transportation or transported by highway only as items of Class 9. Packaging must conform with paragraph (e)(8) of this section with not more than 100 cells per package.

[Amdt. 173–261, 62 FR 24733, May 6, 1997]

§ 173.186 Matches.

(a) Matches must be of a type which will not ignite spontaneously or undergo marked decomposition when subjected for 8 consecutive hours to a temperature of 93 °C (200 °F).

(b) *Definitions.* (1) *Fusee matches* are matches the heads of which are prepared with a friction-sensitive igniter composition and a pyrotechnic composition which burns with little or no flame, but with intense heat.

(2) *Safety matches* are matches combined with or attached to the box, book or card that can be ignited by friction only on a prepared surface.

(3) *Strike anywhere* matches are matches that can be ignited by friction on a solid surface.

(4) *Wax ''Vesta''* matches are matches that can be ignited by friction either on a prepared surface or on a solid surface.

(c) Safety matches and wax ''Vesta'' matches must be tightly packed in securely closed inner packagings to prevent accidental ignition under conditions normally incident to transportation, and further packed in outer fiberboard, wooden, or other equivalent-type packagings. These matches in outer packagings not exceeding 23 kg (50 pounds) gross weight are not subject to any other requirement (except marking) of this subchapter. These matches may be packed in the same outer packaging with materials not subject to this subchapter.

(d) Strike-anywhere matches may not be packed in the same outer packaging with any material other than safety matches or wax ''Vesta'' matches, which must be packed in separate inner packagings.

(e) Packagings. Strike-anywhere matches must be tightly packed in securely closed chipboard, fiberboard, wooden, or metal inner packagings to prevent accidental ignition under conditions normally incident to transportation. Each inner packaging may contain no more than 700 strike-anywhere matches and must be packed in outer steel drums (1A2), aluminum drums (1B2), steel jerricans (3A2), wooden (4C1, 4C2), plywood (4D), reconstituted wood (4F) or fiberboard (4G) boxes, plywood (1D) or fiber (1G) drums. Gross weight of fiberboard boxes (4G) must not exceed 27 kg (60 pounds). Gross weight of other outer packagings must not exceed 45 kg (100 pounds).

§ 173.187 Pyrophoric solids, metals or alloys, n.o.s.

Packagings for pyrophoric solids, metals, or alloys, n.o.s. must conform to the requirements of part 178 of this subchapter at the packing group performance level specified in the § 172.101 Table. These materials must be packaged as follows:

(a) In wooden boxes (4C1, 4C2, 4D, or 4F) with inner metal receptacles which have a positive (not friction) means of closure and contain not more than 15 kg (33 pounds) each.

(b) In steel drums (1A1 or 1A2) with a gross mass not exceeding 150 kg (331 pounds) per drum.

(c) In fiberboard boxes (4G) with inner metal receptacles which have a positive (not friction) means of closure and contain not more than 7.5 kg (17 pounds) each.

(d) In fiber drums (1G) with inner metal receptacles which have a positive (not friction) means of closure and contain not more than 15 kg (33 pounds) each.

(e) In plywood drums (1D) with inner metal receptacles which have a positive (not friction) means of closure and contain not more than 15 kg (33 pounds) each.

§ 173.188 White or yellow phosphorus.

Phosphorus, white or yellow, when offered for transportation or transported by rail, highway, or water, must be packaged in water or dry in packagings conforming to the requirements of part 178 of this subchapter at the Packing Group I performance level, as follows:

(a) When placed in water, it must be packaged in specification packagings as follows:

(1) Wooden boxes (4C1, 4C2, 4D, or 4F) with:

(i) Inner hermetically sealed (soldered) metal cans, enclosed in other hermetically sealed (soldered) metal cans, or

(ii) Inner water-tight metal cans containing not over 0.5 kg (1 pound) of phosphorus with screw-top closures; or

(2) Steel drums (1A1) not over 250 L (66 gallons) capacity each or steel drums (1A2) not over 115 L (30 gallons) capacity each.

(b) When dry, it must be cast solid and shipped in packagings as follows:

(1) Steel drums (1A2) not over 115 L (30 gallons) capacity each, or

(2) In projectiles or bombs when shipped by, for, or to the Departments of the Army, Navy, or Air Force of the United States Government, without bursting elements.

[Amdt. 173–224, 55 FR 52643, Dec. 21, 1990, as amended at 56 FR 66271, Dec. 20, 1991]

§ 173.189 Batteries containing sodium or cells containing sodium.

(a) Batteries and cells may not contain any hazardous material other than sodium, sulfur or polysulfides. Cells not forming a component of a completed battery may not be offered for transportation at a temperature at which any liquid sodium is present in the cell. Batteries may only be offered for transportation, or transported, at a temperature at which any liquid sodium present in the battery conforms to the conditions prescribed in paragraph (d) of this section.

(b) Cells must consist of hermetically sealed metal casings which fully enclose the hazardous materials and which are so constructed and closed as to prevent the release of the hazardous materials under normal conditions of transport. Cells must be placed in suitable outer packagings with sufficient cushioning material to prevent contact between cells and between cells and the internal surfaces of the outer packaging, and to ensure that no dangerous movement of the cells within the outer packaging occurs in transport. Cells must be packaged in 1A2, 1B2, 1D, 1G, 1H2, 4C1, 4C2, 4D, 4F, 4G or 4H2 outer packagings which meet the requirements of part 178 of this subchapter at the Packing Group II performance level.

(c) Batteries must consist of cells secured within, and fully enclosed by a metal casing so constructed and closed as to prevent the release of the hazardous materials under normal conditions of transport. Batteries may be offered for transportation, and transported, unpacked or in protective packagings that are not subject to the requirements of part 178 of this subchapter.

(d) Batteries containing any liquid sodium may not be offered for transportation, or transported, by aircraft. Batteries containing liquid sodium may be transported by motor vehicle, rail car or vessel under the following conditions:

(1) Batteries must be equipped with an effective means of preventing external short circuits, such as by providing complete electrical insulation of battery terminals or other external electrical connectors. Battery terminals or other electrical connectors penetrating the heat insulation fitted in battery casings must be provided with thermal insulation sufficient to prevent the temperature of the exposed surfaces of such devices from exceeding 55°C (130°F).

(2) No battery may be offered for transportation if the temperature at any point on the external surface of the battery exceeds 55°C (130°F).

(3) If any external source of heating is used during transportation to maintain sodium in batteries in a molten state, means must be provided to ensure that the internal temperature of the battery does not reach or exceed 400°C (752°F).

(4) When loaded in a transport vehicle or freight container:

(i) Batteries must be secured so as to prevent significant movement within the transport vehicle or freight container under conditions normally incident to transportation;

(ii) Adequate ventilation and/or separation between batteries must be provided to ensure that the temperature at any point on the external surface of the battery casing will not exceed 240°C (464°F) during transportation; and

(iii) No other hazardous materials, with the exception of cells containing sodium, may be loaded in the same transport vehicle or freight container. Batteries must be separated from all other freight by a distance of not less than 0.5 meters (1.6 feet).

(e) Batteries containing sodium or cells containing sodium, when installed as part of a motor vehicle, are not subject to the requirements of this subchapter.

[Amdt. 173–241, 59 FR 67511, Dec. 29, 1994, as amended by Amdt. 173–256, 61 FR 51338, Oct. 1, 1996]

§ 173.192 Packaging for certain Packing Group I poisonous materials.

When § 172.101 of this subchapter specifies that a poisonous material be packaged under this section, only specification cylinders are authorized, as follows:

(a) Specification 3A1800, 3AA1800, 3AL1800, 3D, 3E1800, or 33 cylinders, under the following conditions:

(1) Specification 3A, 3AA and 3AL cylinders may not exceed 57 kg (125 pounds) water capacity (nominal).

(2) Specification 3D and 33 cylinders may not exceed 57 kg (125 pounds) water capacity (nominal).

(3) Specification 3AL cylinders containing arsine or phosphine may only be offered for transportation or transported by highway and rail.

(b) Packagings must conform to the requirements of § 173.40 of this part.

(c) For cylinders used for phosgene,

(1) The filling density may not exceed 125 percent;

(2) A cylinder may not contain more than 68 kg (150 pounds) of phosgene; and

(3) Each filled cylinder must be tested for leakage before it is offered for transportation or transported and must show absolutely no leakage; this test must consist of immersing the cylinder and valve, without the protection cap attached, in a bath of water at a temperature of approximately 66 °C (150 °F) for at least 30 minutes, during which time frequent examinations must be made to note any escape of gas. The valve of the cylinder must not be loosened after this test and before the cylinder is offered for transportation or transported.

[Amdt. 173–224, 55 FR 52643, Dec. 21, 1990, as amended at 56 FR 66271, Dec. 20, 1991]

§ 173.193 Bromoacetone, methyl bromide, chloropicrin and methyl bromide or methyl chloride mixtures, etc.

(a) Bromoacetone must be packaged as follows in wooden boxes (4C1, 4C2, 4D or 4F) with inner glass receptacles or tubes in hermetically sealed metal receptacles in corrugated fiberboard cartons. Bottles may not contain over 500 g (17.6 ounces) of liquid each and must be cushioned in cans with at least 12.7 mm (0.5 inch) of absorbent material. Total amount of liquid in the outer box must not exceed 11 kg (24 pounds). Packagings must conform to the requirements of part 178 of this subchapter at the Packing Group I performance level.

(b) Bromoacetone, methyl bromide, chloropicrin and methyl bromide mixtures, chloropicrin and methyl chloride mixtures, and chloropicrin mixtures charged with non-flammable, non-liquefied compressed gas must be packed in Specification 3A, 3AA, 3B, 3C, 3E, 4A, 4B, 4BA, 4BW, or 4C cylinders having not over 113 kg (250 pounds) water capacity (nominal). This capacity does not apply to shipments of methyl bromide.

(c) Methyl bromide mixtures containing up to 2% chloropicrin must be packaged in 4G fiberboard boxes with inside metal cans containing not over one pound each, or inside metal cans

with a minimum wall thickness of 0.007 inch containing not over 1¾ pounds each. The one-pound can must be capable of withstanding an internal pressure of 130 psig without leakage or permanent distortion. Vapor pressure of the contents must not exceed 130 psig at 55 °C (130 °F). The 1¾–pound can must be capable of withstanding an internal pressure of 140 psig without leakage or permanent distortion. Vapor pressure of the contents must not exceed 140 psig at 55 °C (130 °F). Cans must not be liquid full at 130 °F. Cans must be constructed of tinplate or lined with suitable material and must have concave or pressure ends.

(d) Cylinders, except those containing methyl bromide, must conform to § 173.40 of this part.

[Amdt. 173–224, 55 FR 52643, Dec. 21, 1990, as amended at 56 FR 66271, Dec. 20, 1991; 57 FR 45463, Oct. 1, 1992]

§ 173.194 Gas identification sets.

Gas identification sets containing poisonous material must be packaged in packagings conforming to the requirements of part 178 of this subchapter at the Packing Group I performance level, as follows:

(a) In glass inner receptacles, hermetically sealed, of not over 40 ml (1.4 fluid ounces) each. Each glass inner receptacle must in turn be placed in a sealed fiberboard receptacle, cushioned with absorbent material. Not more than 12 fiberboard receptacles must in turn be placed in a 4G fiberboard box. No more than four boxes, well-cushioned, may in turn be placed in a steel cylinder. The cylinder must have a wall thickness of at least 3.7 mm (0.146 inch) and must have a hermetically sealed steel closure.

(b) When the poisonous material is absorbed in a medium such as activated charcoal or silical gel, gas identification sets may be shipped as follows:

(1) If the poisonous material does not exceed 5 ml (0.2 fluid ounce) if a liquid or 5 g (0.2 ounce) if a solid, it may be packed in glass inner receptacles of not over 120 ml (4.1 fluid ounces) each. Each glass receptacle, cushioned with absorbent material must be packed in a hermetically sealed metal can of not less than 0.30-mm (0.012 inch) wall thickness. Metal cans, surrounded on all sides by at least 25 mm (1 inch) of dry sawdust, must be packed in 4C1, 4C2, 4D or 4F wooden boxes. Not more than 100 ml (3.4 fluid ounces) or 100 g (3.5 ounces) of poisonous materials may be packed in one outer wooden box.

(2) If the poisonous material does not exceed 5 ml (0.2 fluid ounce) if a liquid or 20 g (0.7 ounce) if a solid, it may be packed in glass inner receptacles with screw-top closures of not less than 60 ml (2 ounces), hermetically sealed. Twelve bottles containing poisonous material, not to exceed 100 ml (3.4 ounces) or 100 g (3.5 ounces), or both, may be placed in a plastic carrying case, each glass receptacle surrounded by absorbent cushioning and each separated from the other by sponge rubber partitions. The plastic carrying case must be placed in a tightly fitting fiberboard box which in turn must be placed in a tightly fitting 4C1, 4C2, 4D or 4F wooden box.

§ 173.195 Hydrogen cyanide, anhydrous, stabilized (hydrocyanic acid, aqueous solution).

(a) Hydrogen cyanide, anhydrous, stabilized, must be packed in specification cylinders as follows:

(1) As prescribed in § 173.192, or

(2) Specification 3A480, 3A480X, 3AA480, or 3A1800 metal cylinders of not over 126 kg (278 pounds) water capacity (nominal). Shipments in 3AL cylinders are authorized only when transported by highway and rail.

(b) Cylinders may not be charged with more than 0.27 kg (0.6 pound) of liquid per 0.45 kg (1 pound) water capacity of cylinder. Each filled cylinder must be tested for leakage before being offered for transportation or transported and must show absolutely no leakage; this test must consist of passing a piece of Guignard's sodium picrate paper over the closure of the cylinder, without the protection cap attached, to detect any escape of hydrogen cyanide from the cylinder. Other equally efficient test methods may be used in place of sodium picrate paper.

(c) Packagings for hydrogen cyanide must conform to § 173.40.

[Amdt. 173–224, 55 FR 52643, Dec. 21, 1990, as amended at 56 FR 66271, Dec. 20, 1991]

§ 173.196 Infectious substances (etiologic agents).

(a) Authorized packagings and components are as follows:

(1) Inner packagings comprising:

(i) A watertight primary receptacle;

(ii) A watertight secondary packaging; and

(iii) An absorbent material must be placed between the primary receptacle and the secondary packaging. If multiple-primary receptacles are placed in a single secondary packaging they must be wrapped individually to ensure that contact between them is prevented. The absorbent material, such as cotton wool, must be sufficient to absorb the entire contents of all primary receptacles.

(2) An outer packaging must be of adequate strength for its capacity, mass and intended use.

(b) Each package for infectious substances must be capable of passing the tests specified in § 178.609 of this subchapter.

(c) Packages consigned as freight must be at least 100 mm (3.9 inches) in the smallest overall external dimensions.

(d) For all packages containing infectious substances, an itemized list of contents must be enclosed between the secondary packaging and the outer packaging.

(e) Although exceptional cases, such as whole organs, may require special packaging, the great majority of infectious substances can and must be packaged according to the following guidelines.

(1) *Lypholized substances.* Primary receptacles include flame-sealed glass ampoules or rubber-stopped glass vials fitted with metal seals.

(2) *Liquid or solid substances*—(i) *Substances shipped at ambient temperatures or higher.* Primary receptacles include those of glass, metal or plastic. Positive means of ensuring a leakproof seal, such as heat seal, skirted stopper or metal crimp seal must be provided. If screw caps are used, they must be reinforced with adhesive tape.

(ii) *Substances shipped refrigerated or frozen (ice, pre-frozen packs, dry ice).* Ice or dry ice must be placed outside the secondary packagings. Interior supports must be provided to secure the secondary packagings in the original position after the ice or dry ice has dissipated. If ice is used, the packaging must be leakproof. If dry ice is used, the outer packaging must permit the release of carbon dioxide gas.

(iii) *Substances shipped in liquid nitrogen.* Plastic primary receptacles capable of withstanding very low temperatures must be used. Secondary packaging must also withstand very low temperatures and in most cases will need to be fitted over individual primary receptacles. Requirements for shipment of liquid nitrogen must also be observed.

(f) Whatever the intended temperature of shipment, the primary receptacle or secondary packaging used for infectious substances must be capable of withstanding, without leakage, an internal pressure which produces a pressure differential of not less than 95 kPa (14 psi) and temperatures in the range of −40 °C to +55 °C (−40 °F to +131 °F).

(g) The requirements of this section supplement the requirements of the Department of Health and Human Services contained in 42 CFR part 72.

(h) *Exceptions.* The following substances are not subject to any requirements of this subchapter if the items as packaged do not contain any material otherwise subject to the requirements of this subchapter.

(1) Diagnostic specimens.

(2) Biological products.

[Amdt. 173–224, 55 FR 52634, Dec. 21, 1990, as amended by Amdt. 173–241, 59 FR 67511, Dec. 29, 1994]

§ 173.197 Regulated medical waste.

(a) Regulated medical waste must be packaged in packagings conforming to the requirements of part 178 of this subchapter at the Packing Group II performance level. The packagings must be:

(1) Rigid;

(2) Leak resistant;

(3) Impervious to moisture;

(4) Of sufficient strength to prevent tearing or bursting under normal conditions of use and handling;

(5) Sealed to prevent leakage during transport;

(6) Puncture resistant for sharps and sharps with residual fluids; and

(7) Break-resistant and tightly lidded or stoppered for fluids in quantities greater than 20 cubic centimeters.

(b) Until October 1, 1994, packages do not have to be marked or tested but must be capable of meeting the requirements in subpart M of part 178 of this subchapter.

[Amdt. 173–224, 56 FR 66271, Dec. 20, 1991]

§173.198 Nickel carbonyl.

(a) Nickel carbonyl must be packed in specification steel or nickel cylinders as prescribed for any compressed gas except acetylene. A cylinder used exclusively for nickel carbonyl may be given a complete external visual inspection in lieu of the interior hydrostatic pressure test required by §173.34(e). Visual inspection must be in accordance with CGA Pamphlet C–6.

(b) Packagings for nickel carbonyl must conform to §173.40.

§173.201 Non-bulk packagings for liquid hazardous materials in Packing Group I.

(a) When §172.101 of this subchapter specifies that a liquid hazardous material be packaged under this section, only non-bulk packagings prescribed in this section may be used for its transportation. Each packaging must conform to the general packaging requirements of subpart B of part 173, to the requirements of part 178 of this subchapter at the Packing Group I performance level, and to the requirements of the special provisions of Column 7 of the §172.101 Table.

(b) The following combination packagings are authorized:

Outer packagings:
Steel drum: 1A1 or 1A2
Aluminum drum: 1B1 or 1B2
Metal drum other than steel or aluminum: 1N1 or 1N2
Plywood drum: 1D
Fiber drum: 1G
Plastic drum: 1H1 or 1H2
Steel jerrican: 3A1 or 3A2
Plastic jerrican: 3H1 or 3H2
Aluminum jerrican: 3B1 or 3B2
Steel box: 4A
Aluminum box: 4B
Natural wood box: 4C1 or 4C2
Plywood box: 4D
Reconstituted wood box: 4F
Fiberboard box: 4G
Expanded plastic box: 4H1
Solid plastic box: 4H2
Inner packagings:
Glass or earthenware receptacles
Plastic receptacles
Metal receptacles
Glass ampoules

(c) Except for transportation by passenger aircraft, the following single packagings are authorized:

Steel drum: 1A1 or 1A2
Aluminum drum: 1B1 or 1B2
Metal drum other than steel, or aluminum: 1N1 or 1N2
Plastic drum: 1H1 or 1H2
Steel jerrican: 3A1 or 3A2
Plastic jerrican: 3H1 or 3H2
Aluminum jerrican: 3B1 or 3B2
Plastic receptacle in steel, aluminum, fiber or plastic drum: 6HA1, 6HB1, 6HG1, 6HH1
Plastic receptacle in steel, aluminum, wooden, plywood or fiberboard box: 6HA2, 6HB2, 6HC, 6HD2 or 6HG2
Glass, porcelain or stoneware in steel, aluminum or fiber drum: 6PA1, 6PB1 or 6PG1
Glass, porcelain or stoneware in steel, aluminum, wooden or fiberboard box: 6PA2, 6PB2, 6PC or 6PG2
Glass, porcelain or stoneware in solid or expanded plastic packaging: 6PH1 or 6PH2
Cylinders, specification, as prescribed for any compressed gas, except for Specifications 8 and 3HT

[Amdt. 173–224, 55 FR 52634, Dec. 21, 1990, as amended by Amdt. 173–241, 59 FR 67518, Dec. 29, 1994; Amdt. 173–261, 62 FR 24734, May 6, 1997]

§173.202 Non-bulk packagings for liquid hazardous materials in Packing Group II.

(a) When §172.101 of this subchapter specifies that a liquid hazardous material be packaged under this section, only non-bulk packagings prescribed in this section may be used for its transportation. Each packaging must conform to the general packaging requirements of subpart B of part 173, to the requirements of part 178 of this subchapter at the Packing Group I or II performance level (unless otherwise excepted), and to the particular requirements of the special provisions of Column 7 of the §172.101 Table.

(b) The following combination packagings are authorized:

Outer packagings:
Steel drum: 1A1 or 1A2
Aluminum drum: 1B1 or 1B2
Metal drum other than steel or aluminum: 1N1 or 1N2
Plywood drum: 1D

Fiber drum: 1G
Plastic drum: 1H1 or 1H2
Wooden barrel: 2C2
Steel jerrican: 3A1 or 3A2
Plastic jerrican: 3H1 or 3H2
Aluminum jerrican: 3B1 or 3B2
Steel box: 4A
Aluminum box: 4B
Natural wood box: 4C1 or 4C2
Plywood box: 4D
Reconstituted wood box: 4F
Fiberboard box: 4G
Expanded plastic box: 4H1
Solid plastic box: 4H2
Inner packagings:
Glass or earthenware receptacles
Plastic receptacles
Metal receptacles
Glass ampoules

(c) Except for transportation by passenger aircraft, the following single packagings are authorized:

Steel drum: 1A1 or 1A2
Aluminum drum: 1B1 or 1B2
Metal drum other than steel or aluminum: 1N1 or 1N2
Plastic drum: 1H1 or 1H2
Fiber drum: 1G (with liner)
Wooden barrel: 2C1
Steel jerrican: 3A1 or 3A2
Plastic jerrican: 3H1 or 3H2
Aluminum jerrican: 3B1 or 3B2
Plastic receptacle in steel, aluminum, fiber or plastic drum: 6HA1, 6HB1, 6HG1 or 6HH1
Plastic receptacle in steel, aluminum, wooden, plywood or fiberboard box: 6HA2, 6HB2, 6HC, 6HD2 or 6HG2
Glass, porcelain or stoneware in steel, aluminum or fiber drum: 6PA1, 6PB1 or 6PG1
Glass, porcelain or stoneware in steel, aluminum, wooden or fiberboard box: 6PA2, 6PB2, 6PC or 6PG2
Glass, porcelain or stoneware in solid or expanded plastic packaging: 6PH1 or 6PH2
Plastic receptacle in plywood drum: 6HD1
Glass, porcelain or stoneware in plywood drum or wickerwork hamper: 6PDl or 6PD2
Cylinders, specification, as prescribed for any compressed gas, except for Specifications 8 and 3HT

[Amdt. 173–224, 55 FR 52643, Dec. 21, 1990, as amended at 56 FR 66271, Dec. 20, 1991; Amdt 173–241, 59 FR 67518, Dec. 29, 1994; Amdt. 173–261, 62 FR 24734, May 6, 1997; 62 FR 51560, Oct. 1, 1997]

§ 173.203 Non-bulk packagings for liquid hazardous materials in Packing Group III.

(a) When § 172.101 of this subchapter specifies that a liquid hazardous material be packaged under this section, only non-bulk packagings prescribed in this section may be used for its transportation. Each packaging must conform to the general packaging requirements of subpart B of part 173, to the requirements of part 178 of this subchapter at the Packing Group I, II or III performance level, and to the requirements of the special provisions of Column 7 of the § 172.101 Table.

(b) The following combination packagings are authorized:

Outer packagings:
Steel drum: 1A1 or 1A2
Aluminum drum: 1B1 or 1B2
Metal drum other than steel or aluminum: 1N1 or 1N2
Plywood drum: 1D
Fiber drum: 1G
Plastic drum: 1H1 or 1H2
Wooden barrel: 2C2
Steel jerrican: 3A1 or 3A2
Plastic jerrican: 3H1 or 3H2
Aluminum jerrican: 3B1 or 3B2
Steel box: 4A
Aluminum box: 4B
Natural wood box: 4C1 or 4C2
Plywood box: 4D
Reconstituted wood box: 4F
Fiberboard box: 4G
Expanded plastic box: 4H1
Solid plastic box: 4H2
Inner packagings:
Glass or earthenware receptacles
Plastic receptacles
Metal receptacles
Glass ampoules

(c) The following single packagings are authorized:

Steel drum: 1A1 or 1A2
Aluminum drum: 1B1 or 1B2
Metal drum other than steel or aluminum: 1N1
Plastic drum: 1H1 or 1H2
Fiber drum: 1G (with liner)
Wooden barrel: 2C1
Steel jerrican: 3A1 or 3A2
Plastic jerrican: 3H1 or 3H2
Aluminum jerrican: 3B1 or 3B2
Plastic receptacle in steel, aluminum, fiber or plastic drum: 6HA1, 6HB1, 6HG1 or 6HH1
Plastic receptacle in steel, aluminum, wooden, plywood or fiberboard box: 6HA2, 6HB2, 6HC, 6HD2 or 6HG2
Glass, porcelain or stoneware in steel, aluminum or fiber drum: 6PA1, 6PB1, or 6PG1
Glass, porcelain or stoneware in steel, aluminum, wooden or fiberboard box: 6PA2, 6PB2, 6PC or 6PG2
Glass, porcelain or stoneware in solid or expanded plastic packaging: 6PH1 or 6PH2
Plastic receptacle in plywood drum: 6HD1
Glass, porcelain or stoneware in plywood drum or wickerwork hamper: 6PD1 or 6PD2

Cylinders, as prescribed for any compressed gas, except for Specifications 8 and 3HT

[Amdt. 173–224, 55 FR 52643, Dec. 21, 1990, as amended at 56 FR 66271, Dec. 20, 1991; Amdt. 173–241, 59 FR 67518, Dec. 29, 1994; Amdt. 173–261, 62 FR 24734, May 6, 1997]

§173.204 Non-bulk, non-specification packagings for certain hazardous materials.

When §172.101 of this subchapter specifies that a liquid or solid hazardous material be packaged under this section, any appropriate non-bulk packaging which conforms to the general packaging requirements of subpart B of part 173 may be used for its transportation. Packagings need not conform to the requirements of part 178 of this subchapter.

§173.205 Specification cylinders for liquid hazardous materials.

When §172.101 of this subchapter specifies that a hazardous material be packaged under this section, any specification cylinder, except those specified for acetylene, is authorized. Cylinders used for poisonous materials (Division 6.1 or 2.3) must conform to the requirements of §173.40.

§173.211 Non-bulk packagings for solid hazardous materials in Packing Group I.

(a) When §172.101 of this subchapter specifies that a solid hazardous material be packaged under this section, only non-bulk packagings prescribed in this section may be used for its transportation. Each package must conform to the general packaging requirements of subpart B of part 173, to the requirements of part 178 of this subchapter at the Packing Group I performance level, and to the requirements of the special provisions of Column 7 of the §172.101 Table.

(b) The following combination packagings are authorized:

Outer packagings:
Steel drum: 1A1 or 1A2
Aluminum drum: 1B1 or 1B2
Metal drum other than steel or aluminum: 1N1 or 1N2
Plywood drum: 1D
Fiber drum: 1G
Plastic drum: 1H1 or 1H2
Wooden barrel: 2C2
Steel jerrican: 3A1 or 3A2
Plastic jerrican: 3H1 or 3H2
Aluminum jerrican: 3B1 or 3B2
Steel box: 4A
Aluminum box: 4B
Natural wood box: 4C1 or 4C2
Plywood box: 4D
Reconstituted wood box: 4F
Fiberboard box: 4G
Solid plastic box: 4H2
Inner packagings:
Glass or earthenware receptacles
Plastic receptacles
Metal receptacles
Glass ampoules

(c) Except for transportation by passenger aircraft, the following single packagings are authorized:

Steel drum: 1A1 or 1A2
Aluminum drum: 1B1 or 1B2
Metal drum other than steel or aluminum: 1N1 or 1N2
Plastic drum: 1H1 or 1H2
Fiber drum: 1G
Steel jerrican: 3A1 or 3A2
Plastic jerrican: 3H1 or 3H2
Aluminum jerrican: 3B1 or 3B2
Steel box with liner: 4A
Aluminum box with liner: 4B
Natural wood box, sift proof: 4C2
Plastic receptacle in steel, aluminum, plywood, fiber or plastic drum: 6HA1, 6HB1, 6HD1, 6HG1 or 6HH1
Plastic receptacle in steel, aluminum, wooden, plywood or fiberboard box: 6HA2, 6HB2, 6HC, 6HD2 or 6HG2
Glass, porcelain or stoneware in steel, aluminum, plywood or fiber drum: 6PA1, 6PB1, 6PD1 or 6PG1
Glass, porcelain or stoneware in steel, aluminum, wooden or fiberboard box: 6PA2, 6PB2, 6PC or 6PG2
Glass, porcelain or stoneware in expanded or solid plastic packaging: 6PH1 or 6PH2

[Amdt. 173–224, 55 FR 52643, Dec. 21, 1990, as amended at 56 FR 66271, Dec. 20, 1991; 57 FR 45463, Oct. 1, 1992; Amdt. 173–241, 59 FR 67511, 67518, Dec. 29, 1994; Amdt. 173–261, 62 FR 24734, May 6, 1997]

§173.212 Non-bulk packagings for solid hazardous materials in Packing Group II.

(a) When §172.101 of this subchapter specifies that a solid hazardous material be packaged under this section, only non-bulk packagings prescribed in this section may be used for its transportation. Each package must conform to the general packaging requirements of subpart B of part 173, to the requirements of part 178 of this subchapter at the Packing Group I or II performance level, and to the requirements of the

special provisions of Column 7 of the § 172.101 Table.

(b) The following combination packagings are authorized:

Outer packagings:
Steel drum: 1A1 or 1A2
Aluminum drum: 1B1 or 1B2
Metal drum other than steel or aluminum: 1N1 or 1N2
Plywood drum: 1D
Fiber drum: 1G
Plastic drum: 1H1 or 1H2
Wooden barrel: 2C2
Steel jerrican: 3A1 or 3A2
Plastic jerrican: 3H1 or 3H2
Aluminum jerrican: 3B1 or 3B2
Steel box: 4A
Aluminum box: 4B
Natural wood box: 4C1 or 4C2
Plywood box: 4D
Reconstituted wood box: 4F
Fiberboard box: 4G
Solid plastic box: 4H2
Inner packagings:
Glass or earthenware receptacles
Plastic receptacles
Metal receptacles
Glass ampoules

(c) Except for transportation by passenger aircraft, the following single packagings are authorized:

Steel drum: 1A1 or 1A2
Aluminum drum: 1B1 or 1B2
Plywood drum: 1D
Plastic drum: 1H1 or 1H2
Fiber drum: 1G
Metal drum other than steel or aluminum: 1N1 or 1N2
Wooden barrel: 2C1 or 2C2
Steel jerrican: 3A1 or 3A2
Plastic jerrican: 3H1 or 3H2
Aluminum jerrican: 3B1 or 3B2
Steel box: 4A
Steel box with liner: 4A
Aluminum box: 4B
Aluminum box with liner: 4B
Natural wood box: 4C1
Natural wood box, sift proof: 4C2
Plywood box: 4D
Reconstituted wood box: 4F
Fiberboard box: 4G
Expanded plastic box: 4H1
Solid plastic box: 4H2
Bag, woven plastic: 5H1, 5H2 or 5H3
Bag, plastic film: 5H4
Bag, textile: 5L1, 5L2 or 5L3
Bag, paper, multiwall, water resistant: 5M2
Plastic receptacle in steel, aluminum, plywood fiber or plastic drum: 6HA1, 6HB1, 6HD1, 6HG1 or 6HH1
Plastic receptacle in steel aluminum, wood, plywood or fiberboard box: 6HA2, 6HB2, 6HC, 6HD2 or 6HG2
Glass, porcelain or stoneware in steel, aluminum, plywood or fiber drum: 6PA1, 6PB1, 6PD1 or 6PG1
Glass, porcelain or stoneware in steel, aluminum, wooden or fiberboard box: 6PA2, 6PB2, 6PC or 6PG2
Glass, porcelain or stoneware in expanded or solid plastic packaging: 6PH1 or 6PH2

[Amdt. 173–224, 55 FR 52634, Dec. 21, 1990, as amended by Amdt. 173–241, 59 FR 67511, 67518, Dec. 29, 1994; Amdt. 173–261, 62 FR 24734, May 6, 1997]

§ 173.213 Non-bulk packagings for solid hazardous materials in Packing Group III.

(a) When § 172.101 of this subchapter specifies that a solid hazardous material be packaged under this section, only non-bulk packagings prescribed in this section may be used for its transportation. Each package must conform to the general packaging requirements of subpart B of part 173, to the requirements of part 178 of this subchapter at the Packing Group I, II or III performance level, and to the requirements of the special provisions of Column 7 of the § 172.101 Table.

(b) The following combination packagings are authorized:

Outer packagings:
Steel drum: 1A1 or 1A2
Aluminum drum: 1B1 or 1B2
Metal drum other than steel or aluminum: 1N1 or 1N2
Plywood drum: 1D
Fiber drum: 1G
Plastic drum: 1H1 or 1H2
Wooden barrel: 2C2
Steel jerrican: 3A1 or 3A2
Plastic jerrican: 3H1 or 3H2
Aluminum jerrican: 3B1 or 3B2
Steel box: 4A
Aluminum box: 4B
Natural wood box: 4C1 or 4C2
Plywood box: 4D
Reconstituted wood box: 4F
Fiberboard box: 4G
Solid plastic box: 4H2
Inner packagings:
Glass or earthenware receptacles
Plastic receptacles
Metal receptacles
Glass ampoules

(c) The following single packagings are authorized:

Steel drum: 1A1 or 1A2
Aluminum drum: 1B1 or 1B2
Plywood drum: 1D
Fiber drum: 1G
Plastic drum: 1H1 or 1H2

Metal drum other than steel or aluminum: 1N1 or 1N2
Wooden barrel: 2C1 or 2C2
Steel jerrican: 3A1 or 3A2
Plastic jerrican: 3H1 or 3H2
Aluminum jerrican: 3B1 or 3B2
Steel box with liner: 4A
Steel box: 4A
Aluminum box with liner: 4B
Natural wood box: 4C1
Natural wood box, sift proof: 4C2
Plywood box: 4D
Reconstituted wood box: 4F
Fiberboard box: 4G
Expanded plastic box: 4H1
Solid plastic box: 4H2
Bag, woven plastic: 5H1, 5H2 or 5H3
Bag, plastic film: 5H4
Bag, textile: 5L1, 5L2 or 5L3
Bag, paper, multiwall, water resistant: 5M2
Plastic receptacle in steel, aluminum, plywood, fiber or plastic drum: 6HA1, 6HB1, 6HD1, 6HG1 or 6HH1
Plastic receptacle in steel, aluminum, wooden, plywood or fiberboard box: 6HA2, 6HB2, 6HC, 6HD2 or 6HG2
Glass, porcelain or stoneware in steel, aluminum, plywood or fiber drum: 6PA1, 6PB1, 6PD1 or 6PG1
Glass, porcelain or stoneware in steel, aluminum, wooden or fiberboard box: 6PA2, 6PB2, 6PC or 6PG2
Glass, porcelain or stoneware in expanded or solid plastic packaging: 6PH1 or 6PH2

[Amdt. 173–224, 55 FR 52634, Dec. 21, 1990, as amended by Amdt. 173–241, 59 FR 67511, 67518, Dec. 29, 1994; Amdt. 173–261, 62 FR 24734, May 6, 1997]

§173.214 Packagings which require approval by the Associate Administrator for Hazardous Materials Safety.

When §172.101 of this subchapter specifies that a hazardous material be packaged under this section, packagings and method of shipment must be approved by the Associate Administrator for Hazardous Materials Safety prior to the first shipment.

§173.216 Asbestos, blue, brown or white.

(a) Asbestos, blue, brown or white, includes each of the following hydrated mineral silicates: chrysolite, crocidolite, amosite, anthophyllite asbestos, tremolite asbestos, actinolite asbestos, and every product containing any of these materials.

(b) Asbestos which is immersed or fixed in a natural or artificial binder material (such as cement, plastic, asphalt, resins or mineral ore), and manufactured products containing asbestos are not subject to the requirements of this subchapter.

(c) Packagings for asbestos must conform to the general packaging requirements of subpart B of this part but need not conform to the requirements of part 178 of this subchapter. Asbestos must be offered for transportation and transported in—

(1) Rigid, leaktight packagings, such as metal, plastic or fiber drums, portable tanks, hopper-type rail cars, or hopper-type motor vehicles;

(2) Bags or other non-rigid packagings in closed freight containers, motor vehicles, or rail cars that are loaded by and for the exclusive use of the consignor and unloaded by the consignee;

(3) Bags or other non-rigid packagings which are dust and siftproof. When transported by other than private carrier by highway, such packagings containing asbestos must be palletized and unitized by methods such as shrink-wrapping in plastic film or wrapping in fiberboard secured by strapping. Pallets need not be used during transportation by vessel for loads with slings that are unitized by methods such as shrink,wrapping, if the slings adequately and evenly support the loads and the unitizing method prevents shifting of the bags or other non-rigid packagings during conditions normally incident to transportation; or

(4) Bags or other non-rigid packagings which are dust and siftproof in strong outside fiberboard or wooden boxes.

§173.217 Carbon dioxide, solid (dry ice).

(a) Carbon dioxide, solid (dry ice), when offered for transportation or transported by aircraft or water, must be packed in packagings designed and constructed to permit the release of carbon dioxide gas to prevent a build-up of pressure that could rupture the packagings. Packagings must conform to the general packaging requirements of subpart B of this part but need not conform to the requirements of part 178 of this subchapter. For each shipment by air exceeding 2.3 kg (5 lbs) per package, advance arrangements must be

made between the shipper and each carrier.

(b) Railroad cars and motor vehicles containing solid carbon dioxide, when accepted for transportation on board ocean vessels, must be conspicuously marked on two sides ''WARNING CO_2 SOLID (DRY ICE).''

(c) Other packagings containing solid carbon dioxide, when offered or accepted for transportation on board ocean vessels, must be marked ''CARBON DIOXIDE, SOLID—DO NOT STOW BELOW DECKS.''

(d) Not more than 200 kg (441 pounds) of solid carbon dioxide may be transported in any one cargo compartment or bin on any aircraft except by specific and special written arrangement between the shipper and the aircraft operator.

(e) Carbon dioxide, solid (dry ice) is excepted from the shipping paper and certification requirements of this subchapter if the requirements of paragraphs (a) and (d) of this section are complied with and the package is marked ''Carbon dioxide, solid'' or ''Dry ice'' and marked with an indication that the material being refrigerated is used for diagnostic or treatment purposes (e.g., frozen medical specimens).

[Amdt. 173–224, 55 FR 52643, Dec. 21, 1990, as amended by Amdt. 173–138, 59 FR 49133, Sept. 26, 1994]

§ 173.218 Fish meal or fish scrap.

(a) Except as provided in paragraph (b) of this section, fish meal or fish scrap, containing at least 6 percent but not more than 12 percent water, is authorized for transportation by water only when packaged as follows:

(1) Burlap (jute) bag;

(2) Multi-wall paper bag;

(3) Polyethylene-lined burlap or paper bag;

(4) Cargo tank;

(5) Portable tank;

(6) Rail car; or

(7) Freight container.

(b) Fish meal or fish scrap may not be offered for transportation if the temperature of the material exceeds 49 °C (120 °F).

(c) When fish scrap or fish meal is offered for transportation by vessel in bulk in freight containers, the fish meal must contain at least 100 ppm of anti-oxident (ethoxyquin) at the time of shipment.

§ 173.219 Life-saving appliances.

(a) A life-saving appliance, self-inflating or non-self-inflating, containing small quantities of hazardous materials which are required as part of the life-saving appliance must conform to the requirements of this section. Packagings must conform to the general packaging requirements of subpart B of this part but need not conform to the requirements of part 178 of this subchapter.

(b) Hazardous materials therein must be packaged as follows:

(1) Nonflammable compressed gases must be packaged in cylinders in accordance with the requirements of this subchapter;

(2) Smoke and illumination signal flares must be in plastic or fiberboard receptacles;

(3) Strike-anywhere matches must be cushioned to prevent movement or friction in a cylindrical metal or composition receptacle with a screw-type closure;

(4) Flammable liquids must be in strong inner packagings in a repair kit; and

(5) Limited quantities of other hazardous materials are permitted if packaged in accordance with the requirements of this subchapter.

(c) Materials therein not subject to the requirements of this subchapter which are an integral part of the life-saving appliance must be packaged in a strong fiberglass kit case which is overpacked in a waterproof fiberboard packaging, or be packaged in other strong outer packagings.

§ 173.220 Internal combustion engines, self-propelled vehicles, and mechanical equipment containing internal combustion engines or wet batteries.

(a) *Applicability*. An internal combustion engine, self-propelled vehicle, or mechanized equipment is subject to the requirements of this subchapter when transported as cargo on a transport vehicle, vessel or aircraft, if—

(1) The engine or fuel tank contains a flammable liquid or gaseous fuel;

(2) It is equipped with a wet electric storage battery other than a nonspillable battery; or

(3) It contains other hazardous materials subject to the requirements of this subchapter.

(b) *Flammable liquid fuel.* Except as provided in this paragraph, flammable liquid fuel tanks must be completely drained and securely closed. Up to 500 ml (17 ounces) of fuel may be left in engine components and fuel lines provided the lines are securely closed to prevent leakage of fuel. Fuel may remain in engines and tanks installed in self-propelled vehicles and mechanical equipment under the following conditions:

(1) For transportation by motor vehicle or rail car, the fuel tanks must be securely closed.

(2) For transportation by vessel, the shipment must conform to §176.905 of this subchapter; and

(3) For transportation by aircraft, the shipment must conform to §175.305 of this subchapter.

(c) *Wet batteries.* Wet batteries must either be installed, securely fastened in an upright position, and protected against short circuits and leakage or be removed and packaged separately under §173.159. In addition—

(1) For transportation by vessel, the provisions of this subchapter do not apply to a motor vehicle or mechanical equipment which is electrically powered by a wet electric storage battery.

(2) For transportation by passenger-carrying aircraft, a wheelchair equipped with a wet battery must conform to §173.222.

(d) *Truck bodies or trailers on cars.* Truck bodies or trailers with automatic heating or refrigerating equipment of the flammable liquid type may be shipped with fuel tanks filled and equipment operating or inoperative, when used for the transportation of other freight and loaded on flat cars as part of a joint rail and highway movement, provided the equipment and fuel supply conform to the requirements of §177.834(l) of this subchapter and are of a type which has been examined by the Bureau of Explosives and approved by the Associate Administrator for Hazardous Materials Safety.

(e) *Gases.* Compressed gas tanks and cylinders, containing gases, which are component parts of vehicles or mechanical equipment must conform to §173.306.

(f) *Other hazardous materials.* Other hazardous materials must be packaged and transported in accordance with the requirements of this subchapter.

(g) *Exceptions.* Except as provided in paragraph (f) of this section, shipments made under the provisions of this section—

(1) Are not subject to any other requirements of this subchapter, for transportation by motor vehicle or rail car; and

(2) Are not subject to the requirements of subparts D, E, and F (marking, labeling, and placarding, respectively) of part 172 or §172.604 (emergency response telephone number) of this subchapter for transportation by vessel or aircraft.

[Amdt. 173–224, 55 FR 52643 Dec. 21, 1990, as amended by Amdt. 173–253, 61 FR 27175, May 30, 1996; Amdt. 173–261, 62 FR 24734, May 6, 1997]

§173.221 Polymeric beads, expandable.

Polymeric beads or granules, expandable, impregnated with flammable gas or liquid as a blowing agent and plastic moulding materials in dough, sheet or extruded rope form must be packed in wooden (4C1 or 4C2), plywood (4D), fiberboard (4G) or reconstituted wood (4F) boxes with sealed inner plastic liners, plywood drums (1D), fiber drums (1G) with sealed inner plastic liner or in metal (1A1, 1A2, 1B1 or 1B2) packagings.

[Amdt. 173–224, 55 FR 52643, Dec. 21, 1990, as amended at 62 FR 51560, Oct. 1, 1997]

§173.222 Wheelchairs equipped with wet electric storage batteries.

Wheelchairs equipped with wet storage batteries are not subject to the requirements of this subchapter other than the provisions of §175.10(a) (19) and (20) of this subchapter.

§ 173.224 Packaging and control and emergency temperatures for self-reactive materials.

(a) *General.* When the § 172.101 Table of this subchapter specifies that a Division 4.1 material be packaged in accordance with this section, only packagings which conform to the provisions of this section may be used. Each packaging must conform to the general packaging requirements of subpart B of this part and the applicable requirements of part 178 of this subchapter. Non-bulk packagings must meet Packing Group II performance levels. To avoid unnecessary confinement, metallic non-bulk packagings meeting Packing Group I are not authorized. Self-reactive materials which require temperature control are subject to the provisions of § 173.21(f). Packagings required to bear a Class 1 subsidiary label must conform to §§ 173.60 through 173.62.

(b) *Self-Reactive Materials Table.* The Self-Reactive Materials Table specifies, by technical name, those self-reactive materials that are authorized for transportation and not subject to the approval provisions of § 173.124(a)(2)(iii). A self-reactive material identified by technical name in the following table is authorized for transportation only if it conforms to all applicable provisions of the table. The column headings of the Self-Reactive Materials Table are as follows:

(1) *Technical name.* Column 1 specifies the technical name.

(2) *ID number.* Column 2 specifies the identification number which is used to identify the proper shipping name in the § 172.101 Table.

(3) *Concentration of self-reactive material.* Column 3 specifies the concentration (percent) limitations, if any, in mixtures or solutions for the self-reactive material. Limitations are given as minimums, maximums, or a range, as appropriate. A range includes the lower and upper limits (i.e., ''53–100'' means from, and including, 53 percent to, and including 100 percent).

(4) *Packing method.* Column 4 specifies the highest packing method which is authorized for the self-reactive material. A packing method corresponding to a smaller package size may be used, but a packing method corresponding to a larger package size may not be used. The Table of Packing Methods in § 173.225(d) defines the packing methods. Additional bulk packagings are authorized in paragraph (d) of this section for Type F self-reactive materials.

(5) *Control temperature.* Column 5 specifies the control temperature in °C. Temperatures are specified only when temperature controls are required (see § 173.21(f)).

(6) *Emergency temperature.* Column 6 specifies the emergency temperature in °C. Temperatures are specified only when temperature controls are required (see § 173.21(f)).

(7) *Notes.* Column 7 specifies other applicable provisions, as set forth in notes following the table.

SELF-REACTIVE SUBSTANCES

Self-reactive substance (1)	Identification No. (2)	Concentration—(%) (3)	Packing method (4)	Control temperature—(°C) (5)	Emergency temperature (6)	Notes (7)
Azodicarbonamide formulation type B, temperature controlled	3232	<100	OP5			1
Azodicarbonamide formulation type C	3224	<100	OP6			
Azodicarbonamide formulation type C, temperature controlled	3234	<100	OP6			1
Azodicarbonamide formulation type D	3226	<100	OP7			
Azodicarbonamide formulation type D, temperature controlled	3236	<100	OP7			1
2,2'-Azodi(2,4-dimethyl-4-methoxyvaleronitrile)	3236	100	OP7	−5	+5	
2,2'-Azodi(2,4-dimethylvaleronitrile)	3236	100	OP7	+10	+15	
2,2'-Azodi(ethyl 2-methylpropionate)	3235	100	OP7	+20	+25	
1,1-Azodi(hexahydrobenzonitrile)	3226	100	OP7			
2,2-Azodi(isobutyronitrile)	3234	100	OP6	+40	+45	
2,2-Azodi(2-methylbutyronitrile)	3236	100	OP7	+35	+40	
Benzene-1,3-disulphohydrazide, as a paste	3226	52	OP7			
Benzene sulphohydrazide	3226	100	OP7			
4-(Benzyl(ethyl)amino)-3-ethoxybenzenediazonium zinc chloride	3226	100	OP7			
4-(Benzyl(methyl)amino)-3-ethoxybenzenediazonium zinc chloride	3236	100	OP7	+40	+45	
3-Chloro-4-diethylaminobenzenediazonium zinc chloride	3226	100	OP7			
2-Diazo-1-Naphthol-4-sulphochloride	3222	100	OP5			
2-Diazo-1-Naphthol-5-sulphochloride	3222	100	OP5			
2,5-Diethoxy-4-morpholinobenzenediazonium zinc chloride	3236	67–100	OP7	+35	+40	
2,5-Diethoxy-4-morpholinobenzenediazonium zinc chloride	3236	66	OP7	+40	+45	
2,5-Diethoxy-4-morpholinobenzenediazonium tetrafluoroborate	3236	100	OP7	+30	+35	
2,5-Diethoxy-4-(phenylsulphonyl)benzenediazonium zinc chloride	3236	67	OP7	+40	+45	
Diethylene glycol bis(allyl carbonate) + Diisopropylperoxydicarbonate	3237	≥88+≤12	OP8	−10	0	
2,5-Dimethoxy-4-(4-methylphenylsulphony)benzenediazonium zinc chloride	3236	79	OP7	+40	+45	
4-Dimethylamino-6-(2-dimethylaminoethoxy)toluene-2-diazonium zinc chloride	3236	100	OP7	+40	+45	
N,N'-Dinitroso-N, N'-dimethyl-terephthalamide, as a paste	3224	72	OP6			
N,N'-Dinitrosopentamethylenetetramine	3224	82	OP6			2
Diphenyloxide-4,4'-disulphohydrazide	3226	100	OP7			
4-Dipropylaminobenzenediazonium zinc chloride	3226	100	OP7			
2-(N,N-Ethoxycarbonylphenylamino)-3-methoxy-4-(N-methyl-N-cyclohexylamino)benzenediazonium zinc chloride.	3236	63–92	OP7	+40	+45	
2-(N,N-Ethoxycarbonylphenylamino)-3-methoxy-4-(N-methyl-N-cyclohexylamino)benzenediazonium zinc chloride.	3236	62	OP7	+35	+40	
N-Formyl-2-(nitromethylene)-1,3-perhydrothiazine	3236	100	OP7	+45	+50	
2-(2-Hydroxyethoxy)-1-(pyrrolidin-1-yl)benzene-4-diazonium zinc chloride	3236	100	OP7	+45	+50	
3-(2-Hydroxyethoxy)-4-(pyrrolidin-1-yl)benzenediazonium zinc chloride	3236	100	OP7	+40	+45	
2-(N,N-Methylaminoethylcarbonyl)-4-(3,4-dimethyl-phenylsulphonyl)benzene diazonium zinc chloride.	3236	96	OP7	+45	+50	
4-Methylbenzenesulphonylhydrazide	3226	100	OP7			
3-Methyl-4-(pyrrolidin-1-yl)benzenediazonium tetrafluoroborate	3234	95	OP6	+45	+50	
4-Nitrosophenol	3236	100	OP7	+35	+40	
Self-reactive liquid, sample	3223		OP2			3
Self-reactive liquid, sample, temperature control	3233		OP2			3

SELF-REACTIVE SUBSTANCES—Continued

Self-reactive substance (1)	Identification No. (2)	Concentration—(%) (3)	Packing method (4)	Control temperature—(°C) (5)	Emergency temperature (6)	Notes (7)
Self-reactive solid, sample	3224		OP2			3
Self-reactive solid, sample, temperature control	3234		OP2			3
Sodium 2-diazo-1-naphthol-4-sulphonate	3226	100	OP7			
Sodium 2-diazo-1-naphthol-5-sulphonate	3226	100	OP7			
Tetramine palladium (II) nitrate	3234	100	OP6	+30	+35	

NOTES:
1. The emergency and control temperatures must be determined in accordance with § 173.21(f).
2. With a compatible diluent having a boiling point of not less than 150 C.
3. Samples may only be offered for transportation under the provisions of paragraph(c)(4) of this section.

(c) *New self-reactive materials, formulations and samples.* (1) Except as provided for samples in paragraph (c)(3) of this section, no person may offer, accept for transportation, or transport a self-reactive material which is not identified by technical name in the Self-Reactive Materials Table of this section, or a formulation of one or more self-reactive materials which are identified by technical name in the table, unless the self-reactive material is assigned a generic type and shipping description and is approved by the Associate Administrator for Hazardous Materials Safety under the provisions of §173.124(a)(2)(iii).

(2) Except as provided by an approval issued under §173.124(a)(2)(iii), intermediate bulk and bulk packagings are not authorized.

(3) *Samples.* Samples of new self-reactive materials or new formulations of self-reactive materials identified in the Self-Reactive Materials Table in paragraph (b) of this section, for which complete test data are not available, and which are to be transported for further testing or evaluation, may be assigned an appropriate shipping description for Self-reactive materials Type C, packaged and offered for transportation under the following conditions:

(i) Data available to the person offering the material for transportation must indicate that the sample would pose a level of hazard no greater than that of a self-reactive material Type B and that the control temperature, if any, is sufficiently low to prevent any dangerous decomposition and sufficiently high to prevent any dangerous phase separation;

(ii) The sample must be packaged in accordance with packing method OP2;

(iii) Packages of the self-reactive material may be offered for transportation and transported in a quantity not to exceed 10 kg (22 pounds) per transport vehicle; and

(iv) One of the following shipping descriptions must be assigned:

(A) Self-reactive, liquid, type C, 4.1, UN3223.

(B) Self-reactive, solid, type C, 4.1, UN3224.

(C) Self-reactive, liquid, type C, temperature controlled, 4.1, UN3233.

(D) Self-reactive, solid, type C, temperature controlled, 4.1, UN3234.

(d) Self-reactive substances of Type F may not be transported in bulk or intermediate bulk containers except as approved, in writing, by the Associate Administrator for Hazardous Materials Safety.

[Amdt. 173–241, 59 FR 67511, Dec. 29, 1994, as amended by Amdt. 173–242, 60 FR 26806, May 18, 1995; Amdt. 173–246, 60 FR 49110, Sept. 21, 1995; Amdt. 173–256, 61 FR 51338, Oct. 1, 1996; Amdt. 173–261, 62 FR 24734, 24735, May 6, 1997; 62 FR 45702, Aug. 28, 1997]

§173.225 Packaging requirements and other provisions for organic peroxides.

(a) *General.* When the §172.101 Table specifies that an organic peroxide be packaged under this section, the organic peroxide must be packaged and offered for transportation in accordance with the provisions of this section. Each packaging must conform to the general requirements of subpart B of part 173 and to the applicable requirements of part 178 of this subchapter. Non-bulk packagings must meet Packing Group II performance levels. To avoid unnecessary confinement, metallic non-bulk packagings meeting Packing Group I are not authorized. No used material, other than production residues or regrind from the same production process, may be used in plastic packagings. Organic peroxides which require temperature control are subject to the provisions of §173.21(f).

(b) *Organic peroxides table.* The following Organic Peroxides Table specifies, by technical name, those organic peroxides that are authorized for transportation and not subject to the approval provisions of §173.128 of this part. An organic peroxide identified by technical name in the following table is authorized for transportation only if it conforms to all applicable provisions of the table. For an organic peroxide not identified in the table by technical name or a formulation of identified organic peroxides, the provisions of paragraph (c) of §173.128 apply. The column headings of the Organic Peroxides table are as follows:

(1) *Technical name.* The first column specifies the technical name.

(2) *ID number.* The second column specifies the identification (ID) number which is used to identify the proper shipping name in the § 172.101 Table. The word ''EXEMPT'' appearing in the column denotes that the material is not regulated as an organic peroxide.

(3) *Concentration of organic peroxide.* The third column specifies concentration (mass percent) limitations, if any, in mixtures or solutions for the organic peroxide. Limitations are given as minimums, maximums, or a range, as appropriate. A range includes the lower and upper limits (i.e., ''53–100'' means from, and including, 53 percent to, and including 100 percent).

(4) *Concentration of diluents.* The fourth column specifies the type and concentration (mass percent) of diluent or inert solid, when required. Other types and concentrations of diluents may be authorized if approved by the Associate Administrator for Hazardous Materials Safety.

(i) The required mass percent of ''Diluent type A'' is specified in Column 4a. A diluent type A is an organic liquid that does not detrimentally affect the thermal stability or increase the hazard of the organic peroxide and with a boiling point not less than 150 °C at atmospheric pressure. Type A diluents may be used for desensitizing all organic peroxides.

(ii) The required mass percent of ''Diluent type B'' is specified in Column 4b. A diluent type B is an organic liquid which is compatible with the organic peroxide and which has a boiling point, at atmospheric pressure, of less than 150°C (302°F) but at least 60°C (140°F), and a flash point greater than 5°C (41°F). Type B diluents may be used for desensitizing all organic peroxides provided that the boiling point is at least 60°C (140°F) above the SADT of the peroxide in a 50 kg (110 lbs) package. A type A diluent may be used to replace a type B diluent in equal concentration.

(iii) The required mass percent of ''Inert solid'' is specified in column 4c. An inert solid is a solid that does not detrimentally affect the thermal stability or increase the hazard of the organic peroxide.

(5) *Concentration of water.* Column 5 specifies, in mass percent, the minimum amount of water, if any, which must be in formulation.

(6) *Packing method.* Column 6 specifies the highest packing method (largest packaging capacity) authorized for the organic peroxide. Lower numbered packing methods (smaller packaging capacities) are also authorized. For example, if OP3 is specified, then OP2 and OP1 are also authorized. When an IBC or bulk packaging is authorized and meets the requirements of paragraph (e) of this section, lower control temperatures than those specified for non-bulk packagings are required. The Table of Packing Methods in paragraph (d) of this section defines the non-bulk packing methods.

(7) *Temperatures.* Column 7a specifies the control temperature. Column 7b specifies the emergency temperature. Temperatures are specified only when temperature controls are required. (See § 173.21(f)).

(8) *Notes.* Column 8 specifies other applicable provisions, as set forth in notes following the table.

ORGANIC PEROXIDE TABLE

Technical name	ID number	Concentration (mass %)	Diluent (mass %)			Water (mass %)	Packing method	Temperature(°C)		Notes
			A	B	I			Control	Emergency	
(1)	(2)	(3)	(4a)	(4b)	(4c)	(5)	(6)	(7a)	(7b)	(8)
Acetyl acetone peroxide	UN3105	≤42	≥48			≥8	OP7			2
Acetyl acetone peroxide [as a paste]	UN3106	≤32					OP7			21
Acetyl benzoyl peroxide	UN3105	≤45	≥55				OP7			
Acetyl cyclohexanesulfonyl peroxide	UN3112	≤82				≥12	OP4	−10	0	
Acetyl cyclohexanesulfonyl peroxide	UN3115	≤32		≥68			OP7	−10	0	
tert-Amyl hydroperoxide	UN3107	≤88	≥6			≥6	OP8			
tert-Amyl peroxyacetate	UN3107	≤62	≥38				OP8			
tert-Amyl peroxybenzoate	UN3105	≤96	≥4				OP7			
tert-Amyl peroxy-2-ethylhexanoate	UN3115	≤100					OP7	+20	+25	
tert-Amyl peroxy-2-ethylhexyl carbonate	UN3105	≤100					OP7			
tert-Amyl peroxyneodecanoate	UN3115	≤77		≥23			OP7	0	+10	
tert-Amyl peroxypivalate	UN3113	≤77		≥23			OP5	+10	+15	
tert-Amylperoxy-3,5,5-trimethylhexanoate	UN3101	≤100					OP5			
tert-Butyl cumyl peroxide	UN3105	>42 − 100					OP7			1, 9
tert-Butyl cumyl peroxide	UN3106	≤42		≥58			OP7			1, 9
n-Butyl-4,4-di-(tert- butylperoxy)valerate	UN3103	>52 − 100					OP5			
n-Butyl-4,4-di-(tert- butylperoxy)valerate	UN3106	≤52			≥48		OP7			
n-Butyl-4,4-di-(tert- butylperoxy)valerate	UN3108	≤42			≥58		OP8			
tert-Butyl hydroperoxide	UN3103	>79 − 90				≥10	OP5			13
tert-Butyl hydroperoxide	UN3105	≤80	≥20				OP7		4, 13	
tert-Butyl hydroperoxide	UN3107	≤79				>14	OP8			13, 16
tert-Butyl hydroperoxide	UN3109	≤72				≥28	OP8			7, 13
tert-Butyl hydroperoxide [and] Di- tert-butylperoxide	UN3103	<82+>9				≥7	OP5			13
tert-Butyl monoperoxymaleate	UN3102	>52 − 100					OP5			
tert-Butyl monoperoxymaleate	UN3103	≤52	≥48				OP6			
tert-Butyl monoperoxymaleate	UN3108	≤52			≥48		OP8			
tert-Butyl monoperoxymaleate [as a paste]	UN 3108	≥52					OP8			
tert-Butyl monoperoxymaleate [as a paste]	UN 3110	≥42					OP8			7
tert-Butyl monoperoxyphthalate	UN 3102	≤100					OP5			
tert-Butyl peroxyacetate	UN 3101	>52–77	≥23				OP5			
tert-Butyl peroxyacetate	UN 3103	>32–52	≥48				OP6			
tert-Butyl peroxyacetate	UN 3109	≥32	≥68				OP8			10
tert-Butyl peroxyacetate	UN 3119	≥32		≥68			Bulk	+30	+35	7
tert-Butyl peroxyacetate	UN 3109	≥22		≥78			OP8			14
tert-Butyl peroxybenzoate	UN 3103	>77–100	≥23				OP5			
tert-Butyl peroxybenzoate	UN 3105	<52–77	≥23				OP7			1
tert-Butyl peroxybenzoate	UN 3106	≥52			≤48		OP7			
tert-Butyl peroxybutyl fumarate	UN 3105	≤52	≥48				OP7			
tert-Butyl peroxycrotonate	UN 3105	≤77	≥23				OP7			
tert-Butyl peroxydiethylacetate	UN 3113	≤100					OP5	+20	+25	
tert-Butyl peroxydiethylacetate [and] tert-Butyl peroxybenzoate.	UN 3105	≤33+≤33	≥33				OP7			

ORGANIC PEROXIDE TABLE—Continued

Technical name	ID number	Concentration (mass %)	Diluent (mass %)			Water (mass %)	Packing method	Temperature(°C)		Notes
			A	B	I			Control	Emergency	
(1)	(2)	(3)	(4a)	(4b)	(4c)	(5)	(6)	(7a)	(7b)	(8)
tert-Butyl peroxy-2-ethylhexanoate	UN 3113	>52–100					OP6	+20	+25	
tert-Butyl peroxy-2-ethylhexanoate	UN 3117	≤52		≥48			OP8	+30	+35	
tert-Butyl peroxy-2-ethylhexanoate	UN 3118	≤52			≥48		OP8	+20	+25	
tert-Butyl peroxy-2-ethylhexanoate	UN 3119	≤32		≥68			OP8	+40	+45	
tert-Butyl peroxy-2-ethylhexanoate	UN 3119	≤32		≥68			1BC	+30	+35	10
tert-Butyl peroxy-2-ethylhexanoate	UN 3119	≤32		≥68			Bulk	+10	+15	14
tert-Butyl peroxy-2-ethylhexanoate [and] 2,2-di-(tert-Butylperoxy)butane.	UN 3115	≤31+≤36		≥33			OP7	+35	+40	
tert-Butyl peroxy-2-ethylhexanoate [and] 2,2-di-(tert-Butylperoxy)butane.	UN 3106	≤12+≤14	≥14		≥60		OP7			
tert-Butyl peroxy-2- ethylhexylcarbonate	UN 3105	≤100					OP7			
tert-Butyl peroxyisobutyrate	UN 3111	>52–77		≥23			OP5	+15	+20	
tert-Butyl peroxyisobutyrate	UN 3115	≤52		≥48			OP7	+15	+20	
tert-Butylperoxy isopropylcarbonate	UN 3103	≤77	≥23				OP5			
1-(2-.										
tert-Butylperoxy isopropyl)-3- isopropenylbenzene	UN 3105	≤77	≥23				OP7			
1-(2-.										
tert-Butylperoxy isopropyl)-3- isopropenylbenzene	UN 3108	≤42			≥58		OP8			
tert-Butyl peroxy-2-methylbenzoate	UN3103	≤100					OP5			
tert-Butyl peroxyneodecanoate	UN3115	>77–100					OP7	−5	+5	
tert-Butyl peroxyneodecanoate	UN3115	≤77		≥23			OP7	0	+10	
tert-Butyl peroxyneodecanoate [as a stable dispersion in water].	UN3117	≤42					OP8	0	+10	
tert-Butyl peroxyneodecanoate [as a stable dispersion in water (frozen)].	UN3118	≤42					OP8	0	+10	
tert-Butyl peroxyneoheptanoate	UN3115	≤77	≥23				OP7	+10	+15	
3-tert-Butylperoxy-3-phenylphthalide	UN3106	≤100					OP7			
tert-Butyl peroxypivalate	UN3113	>67–77	≥23				OP5	0	+10	
tert-Butyl peroxypivalate	UN3115	≤67		≥33			OP7	0	+10	
tert-Butyl peroxypivalate	UN3119	≤27		≥73			OP8	+30	+35	
tert-Butyl peroxypivalate	UN3119	≤27		≥73			IBC	+10	+15	10
tert-Butyl peroxypivalate	UN3119	≤27		≥73			Bulk	−5	+5	14
tert-Butylperoxy stearylcarbonate	UN3106	≤100					OP7			
tert-Butyl peroxy-3,5,5-trimethylhexanoate	UN3105	>32–100					OP7			
tert-Butyl peroxy-3,5,5-trimethylhexanoate	UN3109	≤32	≥68				OP8			10
tert-Butyl peroxy-3,5,5-trimethylhexanoate	UN3119	≤32		≥68			Bulk	+35	+40	14
3-Chloroperoxybenzoic acid	UN3102	>57–86			≥14		OP1			
3-Chloroperoxybenzoic acid	UN3106	≤77			≥6	≥17	OP7.			
3-Chloroperoxybenzoic acid	UN3106	≤57			≥3	≥40	OP7.			
Cumyl hydroperoxide	UN3107	>90–98	≤10				OP8			13
Cumyl hydroperoxide	UN3109	≥90	≥10				OP8			7, 13, 15

Cumyl peroxyneodecanoate	UN3115	≤77		≥23			OP7	−10	0	
Cumyl peroxyneodecanoate [as a stable dispersion in water]	UN3119	≤52					OP8	−10	0	
Cumyl peroxyneoheptanoate	UN3115	≤77	≥23				OP7	0	+10	
Cumyl peroxypivalate	UN3115	≤77		≥23			OP7	−5	+5	
Cyclohexanone peroxide(s)	UN3104	≤91				≥9	OP6			13
Cyclohexanone peroxide(s)	UN3105	≤72		≥28			OP7			5
Cyclohexanone peroxide(s) [as a paste]	UN3106	≤72					OP7			5, 21
Cyclohexanone peroxide(s)	Exempt	≤32			≥68		Exempt.			
Diacetone alcohol peroxides	UN3115	≤57		≥26		≥8	OP7	+40	+45	5
Diacetyl peroxide	UN3115	≤27		≥73			OP7	+20	+25	8,13
Di-tert-amyl peroxide	UN3107	≤100					OP8			
1,1-Di-(tert-amylperoxy)cyclohexane	UN3103	≤82	≥18				OP6	.		
Dibenzoyl peroxide	UN3102	>51–100			≤48		OP2			3
Dibenzoyl peroxide	UN3102	>77–94				≥6	OP4			3
Dibenzoyl peroxide	UN3104	≤77				≥23	OP6			
Dibenzoyl peroxide	UN3106	≤62			≥28	≥10	OP7	.		
Dibenzoyl peroxide [as a paste]	UN3106	>52–62					OP7			21
Dibenzoyl peroxide [as a paste]	UN3108	≤56.5				≥15	OP8			
Dibenzoyl peroxide	UN3106	>35–52			≥48		OP7			
Dibenzoyl peroxide [as a paste]	UN3108	≤52					OP8			21
Dibenzoyl peroxide [as a paste]	Exempt	≤50	≥14			≥18	Exempt			
Dibenzoyl peroxide	UN3107	>36–42	≥18			≤40	OP8			
Dibenzoyl peroxide	UN3107	>36–42	≥58				OP8			
Dibenzoyl peroxide [as a stable dispersion in water]	UN3109	≤42					OP8			10
Dibenzoyl peroxide	Exempt	≤35			≥65		Exempt			
Dibenzyl peroxydicarbonate	UN3112	≤87				≥13	OP5	+25	+30	
Di-(4-tert- butylcyclohexyl)peroxydicarbonate	UN3114	≤100					OP6	+30	+35	
Di-(4-tert- butylcyclohexyl)peroxydicarbonate [as a stable dispersion in water].	UN3119	≤42					OP8	+30	+35	10
Di-tert-butyl peroxide	UN3107	>32–100					OP8			
Di-tert-butyl peroxide	UN3109	≤52		≥48			OP8			7, 24
Di-tert-butyl peroxyazelate	UN3105	≤52	≥48				OP7			
2,2-Di-(tert-butylperoxy)butane	UN3103	≤52	≥48				OP6			
1,1-Di-(tert-butylperoxy)cyclohexane	UN3101	>80–100					OP5			
1,1-Di-(tert-butylperoxy)cyclohexane	UN3103	>52–80	≤20				OP5			
1,1-Di-(tert-butylperoxy)cyclohexane	UN3105	≤52	≥48				OP7			
1,1-Di-(tert-butylperoxy)cyclohexane	UN3106	≤42	≥13		≥45		OP7			
1,1-Di-(tert-butylperoxy)cyclohexane	UN3109	≤42	≥58				OP8			10
1,1-Di-(tert-butylperoxy)cyclohexane	UN3107	≤27	≥36				OP8			22
1,1-Di-(tert-butylperoxy)cyclohexane	UN3109	≤25	≥25	≥50			OP8			7
1,1-Di-(tert-butylperoxy)cyclohexane	UN3109	≤13	≥13	≥74			OP8			7
Di-n-butyl peroxydicarbonate	UN3115	>27–52		≥48			OP7	−15	5.	
Di-n-butyl peroxydicarbonate [as a stable dispersion in water (frozen)].	UN3118	≤42					OP8	−15	−5.	
Di-n-butyl peroxydicarbonate	UN3117	≤27		≥73			OP8	−10	0.	
Di-sec-butyl peroxydicarbonate	UN3113	>52–100					OP4	−20	−10	6
Di-sec-butyl peroxydicarbonate	UN3115	≤52		≥48			OP7	−15	−5.	
Di-(2-tert-butylperoxyisopropyl)benzene(s)	UN3106	>42–100			≤57		OP7			1, 9
Di-(2-tert-butylperoxyisopropyl)benzene(s)	Exempt	≤42			≥58		Exempt			
Di-(tert-butylperoxy)phthalate	UN3105	>42–52	≥48				OP7	.		

ORGANIC PEROXIDE TABLE—Continued

Technical name	ID number	Concentration (mass %)	Diluent (mass %)			Water (mass %)	Packing method	Temperature(°C)		Notes
			A	B	I			Control	Emergency	
(1)	(2)	(3)	(4a)	(4b)	(4c)	(5)	(6)	(7a)	(7b)	(8)
Di-(tert-butylperoxy)phthalate [as a paste]	UN3106	≤52					OP7			21
Di-(tert-butylperoxy)phthalate	UN3107	≤42	≥58				OP8			
2,2-Di-(tert-butylperoxy)propane	UN3105	≤52	≥48				OP7			
2,2-Di-(tert-butylperoxy)propane	UN3106	≤42	≥13		≥45		OP7			
1,1-Di-(tert-butylperoxy)-3,5,5- trimethylcyclohexane	UN3101	>90–100					OP5			
1,1-Di-(tert-butylperoxy)-3,5,5- trimethylcyclohexane	UN3103	>57–90	≥10				OP5			
1,1-Di-(tert-butylperoxy)-3,5,5- trimethylcyclohexane	UN3106	≤57			≥43		OP7.			
1,1-Di-(tert-butylperoxy)-3,5,5- trimethylcyclohexane	UN3107	≤57	≥43				OP8			
1,1-Di-(tert-butylperoxy)-3,5,5-trimethylcyclohexane	UN3107	≤32	≥26	≥42			OP8			
Dicetyl peroxydicarbonate	UN3116	≤100					OP7	+30	+35	
Dicetyl peroxydicarbonate [as a stable dispersion in water]	UN3119	≤42					OP8	+30	+35	10
Di-4-chlorobenzoyl peroxide	UN3102	≤77				≥23	OP5			
Di-4-chlorobenzoyl peroxide [as a paste]	UN3106	≤52					OP7			21
Di-4-chlorobenzoyl peroxide	Exempt	≤32			≥68		Exempt			
Dicumyl peroxide	UN3109	>52–100		≤48			OP8			7, 9, 11
Dicumyl peroxide	UN3110	>52–100			≤48		OP8			7, 9, 11
Dicumyl peroxide	Exempt	≤52	≥48				Exempt			
Dicumyl peroxide	Exempt	≤52			≥48		Exempt.			
Dicyclohexyl peroxydicarbonate	UN3112	>91–100					OP3	+5	+10	
Dicyclohexyl peroxydicarbonate	UN3114	≤91				≥9	OP5	+5	+10.	
Didecanoyl peroxide	UN3114	≤100					OP6	+30	+35	
2,2-Di-(4,4-di(tert- butylperoxy)cyclohexyl)propane	UN3106	≤42			≥58		OP7.			
2,2-Di-(4,4-di(tert- butylperoxy)cyclohexyl)propane	UN3107	≤25		≥75			OP8.			
Di-2,4-dichlorobenzoyl peroxide	UN3102	≤77				≥23	OP5.			
Di-2,4-dichlorobenzoyl peroxide [as a paste with silicone oil]	UN3106	≤52					OP7.			
Di-(2-ethylhexyl) peroxydicarbonate	UN3113	>77–100					OP5	−20	−10.	
Di-(2-ethylhexyl) peroxydicarbonate	UN3115	≤77					OP7	−15	−5	
Di-(2-ethylhexyl) peroxydicarbonate [as a stable dispersion in water].	UN3119	≤52					OP8	−15	−5	
Di-(2-ethylhexyl) peroxydicarbonate [as a stable dispersion in water (frozen)].	UN3118	≤42					OP8	−15	−5	
Diethyl peroxydicarbonate	UN3115	≤27	≥73				OP7	>10	0.	
2,2-Dihydroperoxypropane	UN3102	≤27			≥73		OP5			
Di-(1-hydroxycyclohexyl)peroxide	UN3106	≤100					OP7			
Diisobutyryl peroxide	UN3111	>32–52		≥48			OP5	−20	−10.	
Diisobutyryl peroxide	UN3115	≤32		≥68			OP7	−20	−10.	
Diisopropylbenzene dihydroperoxide	UN3106	≤82	≥5			≥5	OP7			17
Diisopropyl peroxydicarbonate	UN3112	>52–100					OP2	−15	−5	
Diisopropyl peroxydicarbonate	UN3115	≤52		≥48			OP7	−10	0	
Diisotridecyl peroxydicarbonate	UN3115	≤100					OP7	−10	0	
Dilauroyl peroxide	UN3106	≤100					OP7			

Dilauroyl peroxide [as a stable dispersion in water]	UN3109	≤42					OP8			10
Di-(2-methylbenzoyl)peroxide	UN3112	≤87				≥13	OP5	+30	+35.	
Di-(4-methylbenzoyl)peroxide [as a paste with silicone oil]	UN3106	≤52					OP7			
2,5-Dimethyl-2,5-di- (benzoylperoxy)hexane	UN3102	>82–100					OP5			
2,5-Dimethyl-2,5-di- (benzoylperoxy)hexane	UN3104	≤82				≥18	OP5			
2,5-Dimethyl-2,5-di-(benzoylperoxy)hexane	UN3106	≤82			≥18		OP7			
2,5-Dimethyl-2,5-di-(tert- butylperoxy)hexane	UN3105	>52–100					OP7			
2,5-Dimethyl-2,5-di-(tert- butylperoxy)hexyne-3	UN3101	>87–100					OP5			
2,5-Dimethyl-2,5-di-(tert- butylperoxy)hexyne-3	UN3103	>52–86					OP5			
2,5-Dimethyl-2,5-di-(tert- butylperoxy)hexane	UN3106	≤52			≥48		OP7			
2,5-Dimethyl-2,5-di-(tert- butylperoxy)hexane	UN3109	≤52	≥48				OP8			7
2,5-Dimethyl-2,5-di-(tert- butylperoxy)hexyne-3	UN3106	≤52			≥48		OP7			
2,5-Dimethyl-2,5-di-(tert- butylperoxy)hexane [as a paste]	UN3108	≤47					OP8			
2,5-Dimethyl-2,5-di-(2- ethylhexanoylperoxy)hexane	UN3115	≤100					OP7	+20	+25	
2,5-Dimethyl-2,5-dihydroperoxyhexane	UN3104	≤82				≥18		OP6		
2,5-Dimethyl-2,5-di-(3,5,5- trimethylhexanoylperoxy)hexane	UN3105	≤77	≥23				OP7			
1,1-Dimethyl-3- hydroxybutylperoxyneoheptanoate	UN3117	≤52		≥48			OP8	+0	+10.	
Dimyristyl peroxydicarbonate	UN3116	≤100					OP7	+20	+25.	
Dimyristyl peroxydicarbonate [as a stable dispersion in water].	UN3119	≤42					OP8	+20	+25	
Dimyristyl peroxydicarbonate [as a stable dispersion in water].	UN3119	≤42					IBC	+15	+25	10
Di-(2-neodecanoylperoxyisopropyl)benzene	UN3115	≤52	≥48				OP7	−10	0	
Di-n-nonanoyl peroxide	UN3116	≤100					OP7	0	+10	
Di-n-octanoyl peroxide	UN3114	≤100					OP5	+10	+15	
Diperoxy azelaic acid	UN3116	≤27			≥73		OP7	+35	+40	
Diperoxy dodecane diacid	UN3116	>13–42			≥58		OP7	+40	+45	
Diperoxy dodecane diacid	Exempt	≤13			≥87		Exempt.			
Di-(2-phenoxyethyl)peroxydicarbonate	UN3102	>85–100					OP5			
Di-(2-phenoxyethyl)peroxydicarbonate	UN3106	≤85				≥15	OP7			
Dipropionyl peroxide	UN3117	≤27		≥73			OP8	+15	+20	
Di-n-propyl peroxydicarbonate	UN3113	≤100					OP4	-25	-15.	
Distearyl peroxydicarbonate	UN3106	≤87			≥13		OP7			
Disuccinic acid peroxide	UN3102	>72–100					OP4			18
Disuccinic acid peroxide	UN3116	≤72				≥28	OP7	+10	+15	
Di-(3,5,5-trimethyl-1,2-dioxolanyl- 3)peroxide [as a paste]	UN3116	≤52					OP7	+30	+35	21
Di-(3,5,5-trimethylhexanoyl)peroxide	UN3115	>38–82	≥18				OP7	0	+10	
Di-(3,5,5-trimethylhexanoyl)peroxide [as a stable dispersion in water].	UN3117	≤52					OP8	+10	+15	
Di-(3,5,5-trimethylhexanoyl)peroxide	UN3119	≤38	≥62				OP8	+20	+25	
Di-(3,5,5-trimethylhexanoyl)peroxide	UN3119	≤38	≥62				IBC	+10	+15	10
Di-(3,5,5-trimethylhexanoyl)peroxide	UN3119	≤38	≥62				Bulk	−10	0	14
Ethyl 3,3-di-(tert-amylperoxy)butyrate	UN3105	≤67	≥33				OP7			
Ethyl 3,3-di-(tert-butylperoxy)butyrate	UN3103	>77 - 100					OP5			
Ethyl 3,3-di-(tert-butylperoxy)butyrate	UN3105	≤77	≥23				OP7			
Ethyl 3,3-di-(tert-butylperoxy)butyrate	UN3106	≤52			≥48		OP7			
3,3,6,6,9,9-Hexamethyl-1,2,4,5- tetraoxacyclononane	UN3102	>52 - 100					OP4			
3,3,6,6,9,9-Hexamethyl-1,2,4,5- tetraoxacyclononane	UN3105	≤52	≥48				OP7			
3,3,6,6,9,9-Hexamethyl-1,2,4,5- tetraoxacyclononane	UN3106	≤52		≥48		OP7				
Isopropyl sec-butyl peroxydicarbonate + di-sec-butyl peroxydicarbonate + di-isopropyl peroxydicarbonate.	UN3111	≤52 + ≤28 + ≤22.					OP5	−20	−10	

ORGANIC PEROXIDE TABLE—Continued

Technical name	ID number	Concentration (mass %)	Diluent (mass %)			Water (mass %)	Packing method	Temperature(°C)		Notes
			A	B	I			Control	Emergency	
(1)	(2)	(3)	(4a)	(4b)	(4c)	(5)	(6)	(7a)	(7b)	(8)
Isopropylcumyl hydroperoxide	UN3109	≤72	≥28				OP8			7, 13
p-Menthyl hydroperoxide	UN3105	> 72 - 100					OP7			13
p-Menthyl hydroperoxide	UN3109	≤72	≥28				OP8			7,25
Methylcyclohexanone peroxide(s)	UN3115	≤67		≥33			OP7	+35	+40	
Methyl ethyl ketone peroxide(s)	UN3101	≤52	≥48				OP5			5, 13
Methyl ethyl ketone peroxide(s)	UN3105	≤45	≥55				OP7			5
Methyl ethyl ketone peroxide(s)	UN3107	≤40	≥60				OP8			5
Methyl isobutyl ketone peroxide(s)	UN3105	≤62	≥19				OP7			5, 23
Organic peroxide, liquid, sample	UN3103						OP2			12
Organic peroxide, liquid, sample, temperature controlled	UN3113						OP2			12
Organic peroxide, solid, sample	UN3104						OP2			12
Organic peroxide, solid, sample, temperature controlled	UN3114						OP2			12
Peracetic acid with not more than 20% hydrogen peroxide	Exempt	≤6				≥60	Exempt.			
Peracetic acid with not more than 26% hydrogen peroxide	UN3109	≤17				≥27	OP8			10, 13
Peracetic acid with 7% hydrogen peroxide	UN3107	≤36				≥15	OP8			13
Peroxyacetic acid, type D, stabilized	UN3105	≤43					OP7			13, 20
Peroxyacetic acid, type E, stabilized	UN3107	≤43					OP8			13, 20
Peroxyacetic acid, type F, stabilized	UN3109	≤43					OP8			13, 20
Pinanyl hydroperoxide	UN3105	≥56–100					OP7			13
Pinanyl hydroperoxide	UN3109	<56	>44				OP8			7
Tetrahydronaphthyl hydroperoxide	UN3106	≤100					OP7.			
1,1,3,3-Tetramethylbutyl hydroperoxide	UN3105	≤100					OP7.			
1,1,3,3-Tetramethylbutylperoxy-2-ethylhexanoate	UN3115	≤100					OP7	+20	+25.	
2,4,4-Trimethylpentyl-2-peroxyneodecanoate	UN3115	≤72		≥28			OP7	−5	+5.	
2,4,4-Trimethylpentyl-2-peroxyneodecanoate [as a stable dispersion in water].	UN3119	≤52					OP8	−5	+5.	
2,4,4-Trimethylpentyl-2-peroxy phenoxyacetate	UN3115	≤37		≥63			OP7	−10	0.	

NOTES:
1. For domestic shipments, OP8 is authorized.
2. Available oxygen must be <4.7 percent.
3. For concentrations <80 percent OP5 is allowed. For concentrations of at least 80 percent but <85 percent, OP4 is allowed. For concentrations of at least 85 percent, maximum package size is OP2.
4. The diluent may be replaced by di-tert-butyl peroxide.
5. Available oxygen must be ≤9 percent.
6. For domestic shipments, OP5 is authorized.
7. This material may be transported in intermediate bulk containers and bulk packagings under the provisions of paragraph (e) of this section.
8. Only non-metallic packagings are authorized.
9. For domestic shipments, this material may be transported in bulk packagings under the provisions of paragraph (e)(3)(ii) of this section.
10. This material may be transported in intermediate bulk containers under the provisions of paragraph (e) of this section.
11. Up to 2000 kg per container authorized.
12. Samples may only be offered for transportation under the provisions of paragraph (c)(4) of this section.
13. "Corrosive" subsidiary risk label is required.
14. This material may be transported in bulk packagings under the provisions of paragraph (e) of this section.

15. No "Corrosive" subsidiary risk label is required for concentrations below 80%.
16. With <6% di-tert-butyl peroxide.
17. With ≥8% 1-isopropylhydroperoxy-4-isopropylhydroxybenzene.
18. Addition of water to this organic peroxide will decrease its thermal stability.
19. [Reserved]
20. Mixtures with hydrogen peroxide, water and acid(s).
21. With diluent type A, with or without water.
22. With >36 percent, by mass, ethylbenzene.
23. With >19 percent, by mass, methyl isobutyl ketone.
24. Diluent type b with boiling point >100 C.
25. No "Corrosive" subsidiary risk label is required for concentrations below 56%.

(c) *New organic peroxides, formulations and samples.* (1) Except as provided for samples in paragraph (c)(2) of this section, no person may offer for transportation an organic peroxide which is not identified by technical name in the Organic Peroxides Table of this section, or a formulation of one or more organic peroxides which are identified by technical name in that table, unless the organic peroxide is assigned a generic type and shipping description and is approved by the Associate Administrator for Hazardous Materials Safety under the provisions of § 173.128(c) of this subchapter.

(2) Samples. Samples of new organic peroxides or new formulations of organic peroxides identified in the Organic Peroxides Table in paragraph (b) of this section, for which complete test data are not available, and which are to be transported for further testing or evaluation, may be assigned an appropriate shipping description for organic peroxide Type C, packaged and offered for transportation, under the following conditions:

(i) Data available to the person offering the material for transportation must indicate that the sample would pose a level of hazard no greater than that of an organic peroxide Type B and that the control temperature, if any, is sufficiently low to prevent any dangerous decomposition and sufficiently high to prevent any dangerous phase separation;

(ii) The sample must be packaged in accordance with packing method OP2, for a liquid or solid, respectively;

(iii) Packages of the organic peroxide may be offered for transportation and transported in a quantity not to exceed 10 kg (22 pounds) per transport vehicle; and

(iv) One of the following shipping descriptions must be assigned:

(A) Organic peroxide Type C, liquid, 5.2, UN 3103;

(B) Organic peroxide Type C, solid, 5.2, UN 3104;

(C) Organic peroxide Type C, liquid, temperature controlled, 5.2, UN 3113; or

(D) Organic peroxide Type C, solid, temperature controlled, 5.2, UN 3114.

(3) *Mixtures.* Mixtures of organic peroxides individually identified in the Organic Peroxides Table in paragraph (b) of this section may be classified as the same type of organic peroxide as that of the most dangerous component and be transported under the conditions for transportation given for this type. If the stable components form a thermally less stable mixture, the SADT of the mixture must be determined and the new control and emergency temperature derived under the provisions of § 173.21(f).

(d) *Packing Method Table.* Packagings for organic peroxides and self-reactive substances are listed in the Maximum Quantity per Packing Method Table. The packing methods are designated OP1 to OP8. The quantities specified for each packing method represent the maximum that is authorized.

(1) The following types of packagings are authorized:

(i) Drums: 1A1, 1A2, 1B1, 1B2, 1D, 1G, 1H1, 1H2;

(ii) Jerricans: 3A1, 3A2, 3B1, 3B2, 3H1, 3H2;

(iii) Boxes: 4C1, 4C2, 4D, 4F, 4G, 4H1, 4H2, 4A, 4B; or

(iv) Composite packagings with a plastic inner receptacle: 6HA1, 6HA2, 6HB1, 6HB2, 6HC, 6HD1, 6HD2, 6HG1, 6HG2, 6HH1, 6HH2.

(2) Metal packaging (including inner packagings of combination packagings and outer packagings of combination or composite packagings) are used only for packing methods OP7 and OP8.

(3) In combination packagings, glass receptacles are used only as inner packagings with a maximum content of 0.5 kg or 0.5 liter.

(4) The maximum quantity per packaging or package for Packing Methods OP1–OP8 must be as follows:

MAXIMUM QUANTITY PER PACKAGING/PACKAGE FOR PACKING METHODS OP1 TO OP8

Maximum quantity	Packing method							
	OP1	OP2[1]	OP3	OP4[1]	OP5	OP6	OP7	OP8
Solids and combination packagings (liquid and solid) (kg)	0.5	0.5/10	5	5/25	25	50	50	[2]200

MAXIMUM QUANTITY PER PACKAGING/PACKAGE FOR PACKING METHODS OP1 TO OP8—Continued

Maximum quantity	Packing method							
	OP1	OP2[1]	OP3	OP4[1]	OP5	OP6	OP7	OP8
Liquids (L)	0.5	.....	5	.....	30	60	60	[3]225

[1] If two values are given, the first applies to the maximum net mass per inner packaging and the second to the maximum net mass of the complete package.
[2] 60 kg for jerricans and 100 kg for boxes.
[3] 60 L for jerricans.

(e) *Bulk packagings for organic peroxides.* When bulk packagings are authorized under the provisions of the Organic Peroxides Table in paragraph (b) of this section, only the following packagings are authorized:

(1) *Rail cars.* Class DOT 103, 104, 105, 109, 111, 112, 114, 115, or 120 fusion-weld tank car tank are authorized. DOT 103W, 111A60F1 and 111A60W1 tank car tanks must have bottom outlets effectively sealed from inside. Gauging devices are required on DOT 103W tank car tanks. Riveted tank car tanks are not authorized.

(2) *Cargo tanks.* Specification MC 307, MC 310, MC 311, MC 312, DOT 407, and DOT 412 cargo tank motor vehicles with a tank design pressure of at least 172 kPa (25 psig) are authorized.

(3) *Portable tanks.*

(i) Specification IM 101 intermodal portable tanks are authorized as follows:

(A) Each tank must have a minimum design pressure of 267 kPa (39 psig), a minimum shell thickness of 6.35 mm (0.250 inch) mild steel.

(B) Each tank must be equipped with at least two self-reclosing pressure relief devices of at least 7.6 cm (3.0 inches) diameter. The pressure relief devices must be set at a pressure that is determined by the following formula:

Pressure relief valve setting = 1.2 × [Vapor pressure of lading at 46 °C (115 °F)+Static head of lading+Pressure of gas padding, if any]

(ii) Specification 57 metal portable tanks are authorized only for tert-butyl cumyl peroxide, di-(2-tert-butylperoxyisopropyl-benzene(s), dicumyl peroxide and mixtures of two or more of these peroxides.

(4) For tertiary butyl hydroperoxide (TBHP), each tank car, cargo tank or portable tank must contain 7.6 cm (3.0 inches) low density polyethylene (PE) saddles having a melt index of at least 0.2 grams per 10 minutes (ASTM D1238, condition E) as part of the lading, with a ratio of PE to TBHP over a range of 0.008 to 0.012 by mass. Alternatively, plastic or metal containers equipped with fusible plugs having a melting point between 69 °C (156 °F) and 71 °C (160 °F) and filled with a sufficient quantity of water to dilute the TBHP to 65 percent or less by mass may be used. The PE saddles must be visually inspected after each trip and, at a minimum, once every 12 months, and replaced when discoloration, fracture, severe deformation, or other indication of change is noted.

(5) *Intermediate bulk containers.* Intermediate bulk containers that are tested at the Packing Group II performance level in accordance with subpart O of part 178 of this subchapter are authorized as follows:

(i) Composite: 31HA1;

(ii) Rigid plastic: 31H1; and

(iii) Metal: 31A.

[Amdt. 173–224, 55 FR 52643, Dec. 21, 1990]

EDITORIAL NOTE: For FEDERAL REGISTER citations affecting §173.225, see the List of CFR Sections Affected appearing in the Finding Aids section of this volume.

§ 173.226 Materials poisonous by inhalation, Division 6.1, Packing Group I, Hazard Zone A.

Division 6.1, Packing Group I, materials that are poisonous by inhalation and that fall within the boundaries of Hazard Zone A in the graph found in §173.133 must be packed in non-bulk packagings in accordance with the following paragraphs:

(a) In specification cylinders, as authorized in §173.40.

(b) In 1A1, 1B1, 1H1, 1N1, or 6HA1 drums further packed in a 1A2 or 1H2 drum. Both inner and outer drums

must conform to the performance test requirements of subpart M of part 178 of this subchapter at the Packing Group I performance level. The outer drum must have a minimum thickness of 1.35 mm (0.053 inch) for a 1A2 outer drum or 6.30 mm (0.248 inch) for a 1H2 outer drum. Outer 1A2 and 1H2 drums must withstand a hydrostatic test pressure of 100 kPa (15 psi). Capacity of the inner drum may not exceed 220 L (58 gallons). In addition, the inner drum must—

(1) Be capable of satisfactorily withstanding the hydrostatic pressure test in § 178.605 of this subchapter at a test pressure of 550 kPa (80 psig);

(2) Satisfactorily withstand the leakproofness test in § 178.604 of this subchapter using an internal air pressure of at least twice the vapor pressure at 55 °C (131 °F) of the material to be packaged;

(3) Have screw-type closures that are—

(i) Closed and tightened to a torque prescribed by the closure manufacturer, using a device that is capable of measuring torque;

(ii) Physically held in place by any means capable of preventing back-off or loosening of the closure by impact or vibration during transportation; and

(iii) Provided with a cap seal that is properly applied in accordance with the cap seal manufacturer's recommendations and is capable of withstanding an internal pressure of at least 100 kPa (15 psig).

(4) Have a minimum thickness as follows:

(i) If the capacity of the inner drum is less than or equal to 120 L (32 gallons), the minimum thickness of the inner drum is—

(A) For a 1A1 or 1N1 drum, 1.3 mm (0.051 inch);

(B) For a 1B1 drum, 3.9 mm (0.154 inch);

(C) For a 1H1 drum, 3.16 mm (0.124 inch); and

(D) For a 6HA1 drum, the plastic inner container shall be 1.58 mm (0.0622 inch) and the outer steel drum shall be 0.96 mm (0.0378 inch).

(ii) If the capacity of the inner drum is greater than 120 L (32 gallons), the thickness of the inner drum is—

(A) For a 1A1 or 1N1 drum, 1.7 mm (0.067 inch);

(B) For a 1B1 drum, 4.7 mm (0.185 inch);

(C) For a 1H1 drum, 3.16 mm (0.124 inch); and

(D) For a 6HA1 drum, the plastic inner container shall be 1.58 mm (0.0622 inch) and the outer steel drum shall be 1.08 mm (0.043 inch); and

(5) Be isolated from the outer drum by a shock-mitigating, non-reactive material.

(c) In combination packagings, consisting of an inner packaging system and an outer packaging, as follows:

(1) *Outer packagings:*

Steel drum: 1A2
Aluminum drum: 1B2
Metal drum, other than steel or aluminum: 1N2
Plywood drum: 1D
Fiber drum: 1G
Plastic drum: 1H2
Wooden barrel: 2C2
Steel jerrican: 3A2
Plastic jerrican: 3H2
Aluminum jerrican: 3B2
Steel box: 4A
Aluminum box: 4B
Natural wood box: 4C1 or 4C2
Plywood box: 4D
Reconstituted wood box: 4F
Fiberboard box: 4G
Expanded plastic box: 4H2
Solid plastic box: 4H2

(2) *Inner packaging system.* The inner packaging system consists of two packagings: an impact-resistant receptacle of glass, earthenware, plastic or metal securely cushioned with a non-reactive, absorbent material and packed within a leak-tight packaging of metal or plastic. This combination packaging in turn is packed within the outer packaging. Capacity of each inner receptacle may not exceed 4 L (1 gallon). An inner receptacle that has a closure must have a closure which is physically held in place by any means capable of preventing back-off or loosening of the closure by impact or vibration during transportation. Both the inner packaging system and the outer packaging must conform to the performance test requirements of subpart M of part 178 of this subchapter, at the Packaging Group I performance level. The inner packaging system must meet these tests without the benefit of the outer packaging. The total amount of

liquid contained in the outer packaging may not exceed 16 L (4 gallons).

[Amdt. 173–224, 55 FR 52643, Dec. 21, 1990, as amended at 56 FR 66274, Dec. 20, 1991; Amdt. 173–236, 58 FR 50236, Sept. 24, 1993; Amdt. 173–138, 59 FR 49134, Sept. 26, 1994; Amdt. 173–241, 59 FR 67517, Dec. 29, 1994; Amdt 173–261, 62 FR 24741, May 6, 1997]

§173.227 Materials poisonous by inhalation. Division 6.1, Packing Group I, Hazard Zone B.

Division 6.1, Packing Group I, materials that are poisonous by inhalation and that fall within the boundaries of Hazard Zone B in the graph found in §173.133 shall be packed in non-bulk packagings which conform to the performance test requirements of subpart M of part 178 of this subchapter, at the Packing Group I performance level. The following packagings are authorized:

(a) Packagings as authorized in §173.226.

(b) 1A1, 1B1, 1N1 or 1H1 drum or 6HA1 composite further packed in a 1A2 or 1H2 drum. Both the inner and outer drums must conform to the performance test requirements of subpart M of part 178 of this subchapter at the Packing Group I performance level. The outer drum must have a minimum thickness of 1.35 mm (0.053 inches) for a 1A2 outer drum or 6.30 mm (0.248 inches) for a 1H2 outer drum. Outer 1A2 and 1H2 drums must withstand a hydrostatic test pressure of 100 kPa (15 psi). In addition, the inner drum must—

(1) Satisfactorily withstand the leakproofness test in §178.604 of this subchapter using an internal air pressure of at least two times the vapor pressure at 55 °C (131 °F) of the material to be packaged;

(2) Have screw closures that are—

(i) Closed and tightened to a torque prescribed by the closure manufacturer, using a device that is capable of measuring torque;

(ii) Physically held in place by any means capable of preventing back-off or loosening of the closure by impact or vibration during transportation; and

(iii) Provided with a cap seal that is properly applied in accordance with the cap seal manufacturer's recommendations and is capable of withstanding an internal pressure of at least 100 kPa (15 psig).

(3) Have a minimum thickness as follows:

(i) If the capacity of the inner drum is less than or equal to 30 L (7.9 gallons), the minimum thickness of the inner drum is:

(A) For a 1A1 drum, 0.69 mm (0.027 inch);

(B) For a 1B1 drum, 2.79 mm (0.110 inch);

(C) For a 1H1 drum, 1.14 mm (0.045 inch); and

(D) For a 6HA1 drum, the plastic inner container shall be 1.58 mm (0.0625 inch), the outer steel drum shall be 0.70 mm (0.027 inch).

(ii) If the capacity of the inner drum is greater than 30 L (7.9 gallons) but less than or equal to 120 L (32 gallons), the minimum thickness of the inner drum is—

(A) For a 1A1 drum, 1.08 mm (.043 inch);

(B) For a 1B1 drum, 3.9 mm (0.154 inch);

(C) For a 1H1 drum, 3.16 mm (0.124 inch); and

(D) For a 6HA1 drum, the plastic inner container shall be 1.58 mm (0.0625 inch) and the outer steel drum shall be 0.96 mm (0.0378 inches).

(iii) If the capacity of the inner drum is greater than 120 L (31.7 gallons), the thickness of the inner drum is—

(A) For a 1A1 or 1N1 drum, 1.35 mm (0.053 inches);

(B) For a 1B1 drum, 4.7 mm (0.185 inches);

(C) For a 1H1 drum, 3.16 mm (0.124 inches); and

(D) For a 6HA1 drum, the plastic inner container shall be 1.58 mm (0.0625 inch) and the outer steel drum shall be 1.08 mm (0.043 inch).

(4) Be isolated from the outer drum by a shock-mitigating, non-reactive material; and

(5) Have a capacity not greater than 220 L (58 gallons).

(c) 1A1, 1B1, 1H1, 1N1 or 6HA1 drums described in paragraph (b) of this section may be used without being further packed in a 1A2 or 1H2 drum if the shipper loads the material, blocks and braces the drums within the transport vehicle and seals the transport vehicle

used. Drums may not be stacked (double decked) within the transport vehicle. Shipments must be from one origin to one destination only without any intermediate pickup or delivery.

[Amdt. 173–224, 55 FR 52643, Dec. 21, 1990, as amended at 56 FR 66274, Dec. 20, 1991; 57 FR 45463, Oct. 1, 1992; Amdt. 173–236, 58 FR 50236, Sept. 24, 1993; Amdt. 173–138, 59 FR 49134, Sept. 26, 1994]

§ 173.228 Bromine pentafluoride or bromine trifluoride.

(a) When the § 172.101 Table specifies that a hazardous material be packaged under this section, only non-bulk packagings prescribed in paragraph (b) of this section are authorized for its transportation. Each packaging must conform to the general packaging requirements of subpart B of this part, to the specification requirements of part 178 of this subchapter and to the requirements of the special provisions of Column 7 of the § 172.101 Table.

(b) Specification 3A150, 3AA150, 3B240, 3BN150, 4B240, 4BA240, 4BW240 and 3E1800 cylinders are authorized. Each valve outlet must be sealed by a threaded cap or threaded plug. Cylinder valves must be protected as specified for corrosive gases in § 173.301(g). No cylinder may be equipped with any pressure relief device. Specification 3E1800 cylinders must be packaged in accordance with the requirements of § 173.301(k).

§ 173.229 Chloric acid solution or chlorine dioxide hydrate, frozen.

When the § 172.101 Table specifies that a hazardous material be packaged in accordance with this section, only 4G fiberboard boxes, with inner packagings of polyethylene or other suitable material, are authorized. Fiberboard boxes must be reinforced and insulated and sufficient dry ice must be used to maintain the hydrate or acid in a frozen state during transportation. Each packaging must conform to the general packaging requirements of subpart B of part 173, and to the requirements of part 178 of this subchapter at the Packing Group I performance level. Transportation is authorized only by private or contract carrier by motor vehicle.

Subpart F—Bulk Packaging for Hazardous Materials Other Than Class 1 and Class 7

§ 173.240 Bulk packaging for certain low hazard solid materials.

When § 172.101 of this subchapter specifies that a hazardous material be packaged under this section, only the following bulk packagings are authorized, subject to the requirements of subparts A and B of part 173 of this subchapter and the special provisions specified in Column 7 of the § 172.101 Table.

(a) *Rail cars:* Class DOT 103, 104, 105, 109, 111, 112, 114, 115, or 120 tank car tanks; Class 106 or 110 multi-unit tank car tanks; and metal non-DOT specification, sift-proof tank car tanks and sift-proof closed cars.

(b) *Motor vehicles:* Specification MC 300, MC 301, MC 302, MC 303, MC 304, MC 305, MC 306, MC 307, MC 310, MC 311, MC 312, MC 330, MC 331, DOT 406, DOT 407, and DOT 412 cargo tank motor vehicles; non-DOT specification, sift-proof cargo tank motor vehicles; and sift-proof closed vehicles.

(c) *Portable tanks and closed bulk bins:* DOT 51, 52, 53, 56, 57 and 60 portable tanks; IMO type 1, 2 and 5, and IM 101 and IM 102 portable tanks; marine portable tanks conforming to 46 CFR part 64; and sift-proof non-DOT specification portable tanks and closed bulk bins.

(d) *Intermediate bulk containers.* Intermediate bulk containers are authorized subject to the conditions and limitations of this paragraph and paragraph (d)(2) of this section provided they conform to the requirements in subpart O of part 178 of this subchapter at the Packing Group performance level specified in column 5 of the § 172.101 Table of this subchapter for the material being transported.

(1) The following are authorized:

(i) Composite: 11HZ1, 11HZ2, 21HZ1, 21HZ2, 31HZ1, or 31HZ2. For composite intermediate bulk containers, the letter ''Z'' must be replaced with a capital letter which indicates the material of construction of the outer packaging. For example 21HA1 is a composite intermediate bulk container with a metal outer packaging (see § 178.702 of this subchapter);

(ii) Fiberboard: 11G;

(iii) Flexible: 13H1, 13H2, 13H3, 13H4, 13H5, 13L1, 13L2, 13L3, 13L4, or 13M2;

(iv) Metal: 11A, 11B, 11N, 21A, 21B, 21N, 31A, 31B, or 31N;

(v) Rigid plastic: 11H1, 11H2, 21H1, 21H2, 31H1, or 31H2; or

(vi) Wooden intermediate bulk containers: 11C, 11D, or 11F.

(2) The following conditions and limitations apply to the use of intermediate bulk containers:

(i) Flexible, fiberboard and wooden intermediate bulk containers are intended for the transport of solids only and may not be used for liquids or materials that may become liquid during transportation; or

(ii) Flexible, fiberboard, or wooden intermediate bulk containers containing materials in Packing Group II must be packed in a closed freight container or a closed transport vehicle.

[Amdt. 173–224, 55 FR 52663, Dec. 21, 1990, as amended at 56 FR 66274, Dec. 20, 1991; Amdt. 173–238, 59 FR 38067, July 26, 1994; Amdt. 173–252, 61 FR 28676, June 5, 1996]

§173.241 Bulk packagings for certain low hazard liquid and solid materials.

When §172.101 of this subchapter specifies that a hazardous material be packaged under this section, only the following bulk packagings are authorized, subject to the requirements of subparts A and B of part 173 of this subchapter and the special provisions specified in Column 7 of the §172.101 Table.

(a) *Rail cars:* Class DOT 103, 104, 105, 109, 111, 112, 114, 115, or 120 tank car tanks; Class 106 or 110 multi-unit tank car tanks and AAR Class 203W, 206W, and 211W tank car tanks.

(b) *Cargo tanks:* DOT specification MC 300, MC 301, MC 302, MC 303, MC 304, MC 305, MC 306, MC 307, MC 310, MC 311, MC 312, MC 330, MC 331, DOT 406, DOT 407, and DOT 412 cargo tank motor vehicles; and non-DOT specification cargo tank motor vehicles suitable for transport of liquids.

(c) *Portable tanks:* DOT 51, 52, 56, 57 and 60 portable tanks; IMO type 1, 2 and 5, and IM 101 and IM 102 portable tanks; marine portable tanks conforming to 46 CFR part 64; and non-DOT specification portable tanks suitable for transport of liquids.

(d) *Intermediate bulk containers.* (1) Intermediate bulk containers are authorized subject to the conditions and limitations of this paragraph and paragraph (d)(2) of this section provided they conform to the requirements in subpart O of part 178 of this subchapter at the Packing Group performance level specified in column 5 of the §172.101 Table of this subchapter for the material being transported.

(i) The following are authorized for liquids or solids:

(A) Composite: 31HZ1 or 31HZ2; For each composite intermediate bulk container, the letter ''Z'' must be replaced with a capital letter which indicates the material of construction of the outer packaging. For example, 31HA1 is a composite intermediate bulk container with a metal outer packaging (see §178.702 of this subchapter);

(B) Metal: 31A, 31B, or 31N; or

(C) Rigid plastic: 31H1 or 31H2.

(ii) The following are authorized for solids only:

(A) Composite: 11HZ1, 11HZ2, 21HZ1, or 21HZ2. For each composite intermediate bulk container, the letter ''Z'' must be replaced with a capital letter which indicates the material of construction of the outer packaging. For example, 21HA1 is a composite intermediate bulk container with a metal outer packaging (see §178.702 of this subchapter);

(B) Fiberboard: 11G;

(C) Flexible: 13H1, 13H2, 13H3, 13H4, 13H5, 13L1, 13L2, 13L3, 13L4, or 13M2;

(D) Metal: 11A, 11B, 11N, 21A, 21B, or 21N;

(E) Rigid plastic: 11H1, 11H2, 21H1, or 21H2; or

(F) Wooden: 11C, 11D, or 11F.

(2) The following conditions and limitations apply to the use of intermediate bulk containers:

(i) Flexible, fiberboard and wooden intermediate bulk containers are intended for the transport of solids only and may not be used for liquids or materials that may become liquid during transportation;

(ii) Only liquids with a vapor pressure less than or equal to 110 kPa (16 psig) at 50 °C (122 °F), or 130 kPa (18.9 psig) at 55 °C (131 °F), are authorized in metal intermediate bulk containers; or

(iii) Flexible, fiberboard, or wooden intermediate bulk containers containing materials in Packing Group II must be packed in a closed freight container or a closed transport vehicle.

[Amdt. 173–224, 55 FR 52663, Dec. 21, 1990, as amended at 56 FR 66275, Dec. 20, 1991; Amdt. 173–238, 59 FR 38067, July 26, 1994; Amdt. 173–252, 61 FR 28676, June 5, 1996]

§ 173.242 Bulk packagings for certain medium hazard liquids and solids, including solids with dual hazards.

When § 172.101 of this subchapter specifies that a hazardous material be packaged under this section, only the following bulk packagings are authorized, subject to the requirements of subparts A and B of part 173 of this subchapter and the special provisions specified in Column 7 of the § 172.101 Table.

(a) *Rail cars:* Class DOT 103, 104, 105, 109, 111, 112, 114, 115, or 120 tank car tanks; Class 106 or 110 multi-unit tank car tanks and AAR Class 206W tank car tanks.

(b) *Cargo tanks:* Specification MC 300, MC 301, MC 302, MC 303, MC 304, MC 305, MC 306, MC 307, MC 310, MC 311, MC 312, MC 330, MC 331, DOT 406, DOT 407, and DOT 412 cargo tank motor vehicles. Cargo tanks used to transport Class 3, Packing Group I or II, or Packing Group III with a flash point of less than 38 °C (100 °F); Class 6, Packing Group I or II; and Class 8, Packing Group I or II materials must conform to the following special requirements:

(1) Pressure relief system: Except as provided by § 173.33(d), each cargo tank must be equipped with a pressure relief system meeting the requirements of § 178.346–3 or § 178.347–4 of this subchapter. However, pressure relief devices on MC 310, MC 311 and MC 312 cargo tanks must meet the requirements for a Specification MC 307 cargo tank (except for Class 8, Packing Group I and II). Pressure relief devices on MC 330 and MC 331 cargo tanks must meet the requirement in § 178.337–9 of this subchapter.

(2) Bottom outlets: DOT 406, DOT 407 and DOT 412 must be equipped with stop-valves meeting the requirements of § 178.345–11 of this subchapter; MC 304, MC 307, MC 310, MC 311, and MC 312 cargo tanks must be equipped with stop-valves capable of being remotely closed within 30 seconds of actuation by manual or mechanic means and (except for Class 8, Packing Group I and II) by a closure activated at a temperature not over 121 °C (250 °F); MC 330 and MC 331 cargo tanks must be equipped with internal self-closing stop-valves meeting the requirements in § 178.337–11 of this subchapter.

(c) *Portable tanks:* DOT 51, 52, 53, 56, 57 and 60 portable tanks; and marine portable tanks conforming to 46 CFR part 64. DOT 57 portable tanks used for the transportation by vessel of Class 3, Packing Group II, materials must conform to the following:

(1) Each tank must have a minimum design pressure of 62 kPa (9 psig) and be equipped in accordance with § 178.253–4 of this subchapter, except that frangible devices are not authorized; and

(2) No pressure relief device may open at less than 34.4 kPa (5 psig).

(d) *Intermediate bulk containers.* (1) Intermediate bulk containers are authorized subject to the conditions and limitations of this paragraph and paragraph (d)(2) of this section provided they conform to the requirements in subpart O of part 178 of this subchapter at the Packing Group performance level specified in column 5 of the § 172.101 Table of this subchapter for the material being transported.

(i) The following are authorized for liquids or solids:

(A) Composite intermediate bulk containers: 31HZ1 or 31HZ2; for each composite intermediate bulk container, the letter ''Z'' must be replaced with a capital letter which indicates the material of construction of the outer packaging. For example, 21HA1 is a composite intermediate bulk container with a metal outer packaging (see § 178.702 of this subchapter);

(B) Metal: 31A, 31B, or 31N; or

(C) Rigid plastic: 31H1 or 31H2;

(ii) The following are authorized for solids only:

(A) Composite: 11HZ1, 11HZ2, 21HZ1, or 21HZ2. For each composite intermediate bulk container, the letter ''Z'' must be replaced with a capital letter which indicates the material of construction of the outer packaging. For example, 21HA1 is a composite intermediate bulk container with a metal

outer packaging (see §178.702 of this subchapter);

(B) Fiberboard: 11G;

(C) Flexible: 13H1, 13H2, 13H3, 13H4, 13H5, 13L1, 13L2, 13L3, 13L4, or 13M2;

(D) Metal: 11A, 11B, 11N, 21A, 21B, or 21N;

(E) Rigid plastic: 11H1, 11H2, 21H1, or 21H2; or

(F) Wooden intermediate bulk containers: 11C, 11D, or 11F.

(2) Intermediate bulk containers are authorized subject to the following conditions and limitations:

(i) No Packing Group I liquids or materials classified as Division 4.2 Packing Group I are authorized in intermediate bulk containers. Packing Group I solids are only authorized in metal intermediate bulk containers with capacities up to 3 cubic meters (106 cubic feet) and in rigid plastic, composite, flexible, fiberboard and wooden intermediate bulk containers with capacities of up to 1.5 cubic meters (53 cubic feet);

(ii) Flexible, fiberboard and wooden intermediate bulk containers are intended for the transport of solids only and may not be used for liquids or materials that may become liquid during transportation;

(iii) Only liquids with a vapor pressure less than or equal to 110 kPa (16 psig) at 50 °C (122 °F), or 130 kPa (18.9 psig) at 55 °C (131 °F), are authorized in metal intermediate bulk containers; or

(iv) Flexible, fiberboard, or wooden intermediate bulk containers and composite intermediate bulk containers, with a fiberboard outer body, containing materials in Packing Group I must be packed in a closed freight container or a closed transport vehicle. Flexible, fiberboard, or wooden intermediate bulk containers containing materials in Packing Group II must be packed in a closed freight container or a closed transport vehicle.

[Amdt. 173–224, 55 FR 52663, Dec. 21, 1990, as amended at 56 FR 66275, Dec. 20, 1991; Amdt. 173–238, 59 FR 38067, July 26, 1994; Amdt. 173–243, 60 FR 40038, Aug. 4, 1995; Amdt. 173–246, 60 FR 49110, Sept. 21, 1995; Amdt. 173–252, 61 FR 28676, June 5, 1996; 62 FR 51560, Oct. 1, 1997]

§173.243 Bulk packaging for certain high hazard liquids and dual hazard materials which pose a moderate hazard.

When §172.101 of this subchapter specifies that a hazardous material be packaged under this section, only the following bulk packagings are authorized, subject to the requirements of subparts A and B of part 173 of this subchapter and the special provisions specified in Column 7 of the §172.101 Table.

(a) *Rail cars:* Class DOT 103, 104, 105, 109, 111, 112, 114, 115, or 120 fusion-welded tank car tanks; and Class 106 or 110 multi-unit tank car tanks.

(b) *Cargo tanks.* Specification MC 304, MC 307, MC 330, MC 331 cargo tank motor vehicles; and MC 310, MC 311, MC 312, DOT 407, and DOT 412 cargo tank motor vehicles with tank design pressure of at least 172.4 kPa (25 psig). Cargo tanks used to transport Class 3 or Division 6.1 materials, or Class 8, Packing Group I or II materials must conform to the following special requirements:

(1) Pressure relief system: Except as provided by §173.33(d), each cargo tank must be equipped with a pressure relief system meeting the requirements of §178.346–3 or 178.347–4 of this subchapter. However, pressure relief devices on MC 310, MC 311 and MC 312 cargo tanks must meet the requirements for a Specification MC 307 cargo tank (except for Class 8, Packing Group I and II). Pressure relief devices on MC 330 and MC 331 cargo tanks must meet the requirement in §178.337–9 of this subchapter.

(2) Bottom outlets: DOT 407 and DOT 412 cargo tanks must be equipped with stop-valves meeting the requirements of §178.345–11 of this subchapter; MC 304, MC 307, MC 310, MC 311, and MC 312 cargo tanks must be equipped with stop-valves capable of being remotely closed within 30 seconds of actuation by manual or mechanic means and (except for Class 8, Packing Group I and II) by a closure activated at a temperature not over 121 °C (250 °F); MC 330 and MC 331 cargo tanks must be equipped with internal self-closing stop-valves meeting the requirements in §178.337–11 of this subchapter.

(c) *Portable tanks:* DOT 51 and DOT 60 portable tanks; and marine portable tanks conforming to 46 CFR part 64 with design pressure of at least 172.4 kPa (25 psig).

(d) *Intermediate bulk containers.* (1) Metal intermediate bulk containers (31A, 31B, 31N) are authorized subject to the conditions and limitations of paragraph (d)(2) of this section provided they conform to the requirements in subpart O of part 178 of this subchapter at the Packing Group performance level specified in column 5 of the § 172.101 Table of this subchapter for the material being transported.

(2) Intermediate bulk containers are authorized subject to the following conditions and limitations:

(i) No Packing Group I liquids or materials classified as Division 4.2 Packing Group I are authorized in intermediate bulk containers.

(ii) Packing Group I solids are authorized only in metal intermediate bulk containers with capacities up to three cubic meters (106 cubic feet); and

(iii) Liquids with a vapor pressure greater than 110 kPa (16 psig) at 50 °C (122 °F), or 130 kPa (18.9 psig) at 55 °C (131 °F), are not authorized in metal intermediate bulk containers.

(e) A dual hazard material may be packaged in accordance with § 173.242 if:

(1) The subsidiary hazard is Class 3 with a flash point greater than 38 °C (100°F); or

(2) The subsidiary hazard is Division 6.1, Packing Group III.

[Amdt. 173–224, 55 FR 52663, Dec. 21, 1990, as amended at 56 FR 66275, Dec. 20, 1991; Amdt. 173–138, 59 FR 49134, Sept. 26, 1994; Amdt. 173–238, 59 FR 38068, July 26, 1994; Amdt. 173–243, 60 FR 40038, Aug. 4, 1995; Amdt. 173–246, 60 FR 49110, Sept. 21, 1995; Amdt. 173–252, 61 FR 28676, June 5, 1996; 62 FR 51560, Oct. 1, 1997]

§ 173.244 Bulk packaging for certain pyrophoric liquids (Division 4.2), dangerous when wet (Division 4.3) materials, and poisonous liquids with inhalation hazards (Division 6.1).

When § 172.101 of this subchapter specifies that a hazardous material be packaged under this section, only the following bulk packagings are authorized, subject to the requirements of subparts A and B of part 173 of this subchapter and the special provisions specified in Column 7 of the § 172.101 Table.

(a) *Rail cars:* Class DOT 105, 109, 112, 114, or 120 fusion-welded tank car tanks; and Class 106 or 110 multi-unit tank car tanks.

(b) *Cargo tanks:* Specifications MC 330 and MC 331 cargo tank motor vehicles and, except for Division 4.2 materials, MC 312 and DOT 412 cargo tank motor vehicles.

(c) *Portable tanks:* DOT 51 portable tanks.

[Amdt. 173–224, 55 FR 52663, Dec. 21, 1990, as amended at 56 FR 66275, Dec. 20, 1991; 57 FR 45463, Oct. 1, 1992; Amdt. 173–252, 61 FR 28676, June 5, 1996]

§ 173.245 Bulk packaging for extremely hazardous materials such as poisonous gases (Division 2.3).

When § 172.101 of this subchapter specifies that a hazardous material be packaged under this section, only the following bulk packagings are authorized, subject to the requirements of subparts A and B of part 173 of this subchapter and the special provisions specified in Column 7 of the § 172.101 Table.

(a) Tank car tanks and multi-unit tank car tanks, when approved by the Associate Administrator for Hazardous Materials Safety.

(b) Cargo tank motor vehicles and portable tanks, when approved by the Associate Administrator for Hazardous Materials Safety.

[Amdt. 173–224, 55 FR 52663, Dec. 21, 1990, as amended at 56 FR 66275, Dec. 20, 1991]

§ 173.247 Bulk packaging for certain elevated temperature materials (Class 9) and certain flammable elevated temperature materials (Class 3).

When § 172.101 of this subchapter specifies that a hazardous material be packaged under this section, only the following bulk packagings are authorized, subject to the requirements of subparts A and B of part 173 of this subchapter and the special provisions in Column 7 of the § 172.101 Table. On or after October 1, 1993, authorized packagings must meet all requirements in paragraph (g) of this section, unless otherwise excepted.

(a) *Rail cars:* Class DOT 103, 104, 105, 109, 111, 112, 114, 115 tank car tanks;

Class DOT 106, 110 multi-unit tank car tanks; AAR Class 203W, 206W, 211W tank car tanks; and non-DOT specification tank car tanks equivalent in structural design and accident damage resistance to specification packagings.

(b) *Cargo tanks:* Specification MC 300, MC 301, MC 302, MC 303, MC 304, MC 305, MC 306, MC 307, MC 310, MC 311, MC 312, MC 330, MC 331 cargo tank motor vehicles; DOT 406, DOT 407, DOT 412 cargo tank motor vehicles; and non-DOT specification cargo tank motor vehicles equivalent in structural design and accident damage resistance to specification packagings. A non-DOT specification cargo tank motor vehicle constructed of carbon steel which is in elevated temperature material service is excepted from §178.345–7(d)(5) of this subchapter.

(c) *Portable tanks:* Specification 51, 52, 53, 56, 57, 60 portable tanks; IM 101, 102 portable tanks; marine portable tanks conforming to 46 CFR Part 64; and nonspecification portable tanks equivalent in structural design and accident damage resistance to specification packagings.

(d) *Crucibles:* Nonspecification crucibles designed and constructed such that the stress in the packaging does not exceed one fourth (0.25) of the ultimate strength of the packaging material at any temperature within the design temperature range. Stress is determined under a load equal to the sum of the static or working pressure in combination with the loads developed from accelerations and decelerations incident to normal transportation. For highway transportation, these forces are assumed to be ''1.7g'' vertical, ''0.75g'' longitudinal, and ''0.4g'' transverse, in reference to the axes of the transport vehicle. Each accelerative or decelerative load may be considered separately.

(e) *Kettles:* A kettle, for the purpose of this section, is a bulk packaging (portable tank or cargo tank) having a capacity not greater than 5678 L (1500 gallons) with an integral heating apparatus used for melting various bituminous products such as asphalt. Kettles used for the transport of asphalt or bitumen are subject to the following requirements:

(1) *Low stability kettles.* Kettles with a ratio of track-width to fully loaded center of gravity (CG) height less than 2.5 must meet all requirements of paragraph (g) of this section (track-width is the distance measured between the outer edge of the kettle tires; CG height is measured perpendicular from the road surface).

(2) *High stability kettles.* (i) Kettles with a total capacity of less than 2650 L (700 gallons) and a ratio of track-width to fully loaded CG height of 2.5 or more are excepted from all requirements of paragraph (g)(2) of this section and the rollover protection requirements of paragraph (g)(6) of this section, if closures meet the requirements of paragraph (e)(2)(iii) of this section.

(ii) Kettles with a total capacity of 2650 L (700 gallons) or more and a ratio of track-width to fully loaded CG height of 2.5 or more are excepted from the ''substantially leak tight'' requirements of paragraph (g)(2) of this section and the rollover protection requirements of paragraph (g)(6) of this section if closures meet the requirements of paragraph (e)(2)(iii) of this section.

(iii) Closures must be securely closed during transportation. Closures also must be designed to prevent opening and the expulsion of lading in a rollover accident.

(f) *Other bulk packagings:* Bulk packagings, other than those specified in paragraphs (a) through (e) of this section, which are used for the transport of elevated temperature materials, must conform to all requirements of paragraph (g) of this section on or after October 1, 1993.

(g) *General requirements.* Bulk packagings authorized or used for transport of elevated temperature materials must conform to the following requirements:

(1) *Pressure and vacuum control equipment.* When pressure or vacuum control equipment is required on a packaging authorized in this section, such equipment must be of a self-reclosing design, must prevent package rupture or collapse due to pressure, must prevent significant release of lading due to packaging overturn or splashing or surging

during normal transport conditions, and may be external to the packaging.

(i) Pressure control equipment is not required if pressure in the packaging would increase less than 10 percent as a result of heating the lading from the lowest design operating temperature to a temperature likely to be encountered if the packaging were engulfed in a fire. When pressure control equipment is required, it must prevent rupture of the packaging from heating, including fire engulfment.

(ii) Vacuum control equipment is not required if the packaging is designed to withstand an external pressure of 100 kPa (14.5 psig) or if pressure in the packaging would decrease less than 10 percent as a result of the lading cooling from the highest design operating temperature to the lowest temperature incurred in transport. When vacuum control equipment is required, it must prevent collapse of the packaging from a cooling-induced pressure differential.

(iii) When the regulations require a reclosing pressure relief device, the lading must not render the devices inoperable (i.e. from clogging, freezing, or fouling). If the lading affects the proper operation of the device, the packaging must have:

(A) A safety relief device incorporating a frangible disc or a permanent opening, each having a maximum effective area of 22 cm^2 (3.4 $in.^2$), for transportation by highway;

(B) For transportation of asphalt by highway, a safety relief device incorporating a frangible disc or a permanent opening, each having a maximum effective area of 48 cm^2 (7.4 in^2); or

(C) For transportation by rail, a safety relief device incorporating a frangible disc, meeting the requirements of § 179.15 of this subchapter.

(iv) Reclosing pressure relief devices, frangible discs or permanent openings must not allow the release of lading during normal transportation conditions (i.e., due to splashing or surging).

(2) *Closures.* All openings, except permanent vent openings authorized in paragraph (g)(1)(iii) of this section, must be securely closed during transportation. Packagings must be substantially leak-tight so as not to allow any more than dripping or trickling of a non-continuous flow when overturned. Closures must be designed and constructed to withstand, without exceeding the yield strength of the packaging, twice the static loading produced by the lading in any packaging orientation and at all operating temperatures.

(3) *Strength.* Each packaging must be designed and constructed to withstand, without exceeding the yield strength of the packaging, twice the static loading produced by the lading in any orientation and at all operating temperatures.

(4) *Compatibility.* The packaging and lading must be compatible over the entire operating temperature range.

(5) *Markings.* In addition to any other markings required by this subchapter, each packaging must be durably marked in a place readily accessible for inspection in characters at least 4.8 mm (3/16 inch) with the manufacturer's name, date of manufacture, design temperature range, and maximum product weight (or ''load limit'' for tank cars) or volumetric capacity.

(6) *Accident damage protection.* For transportation by highway, external loading and unloading valves and closures must be protected from impact damage resulting from collision or overturn. Spraying equipment and the road oil application portion of a packaging are excepted from this requirement.

(7) *New construction.* Specification packagings that are being manufactured for the transport of elevated temperature materials must be authorized for current construction.

(h) *Exceptions.*

(1) *General.* Packagings manufactured for elevated temperature materials service prior to October 1, 1993, which are not in full compliance with the requirements in paragraph (g) of this section, may continue in service if they meet the applicable requirements of subparts A and B of this part and meet the closure requirements in paragraph (g)(2) of this section by March 30, 1995.

(2) *Kettles.* Kettles in service prior to October 1, 1993, which are used to transport asphalt or bitumen, are excepted from specific provisions of this section as follows:

(i) Kettles with a total capacity of less than 2650 L (700 gallons), which are

not in full compliance with the requirements of paragraph (g) of this section, may continue in elevated temperature material service if they meet the applicable requirements of subparts A and B of this part and if, after March 30, 1995, closures are secured during transport to resist opening in an overturn.

(ii) Kettles with a total capacity of 2650 L (700 gallons) or more, which are not in full compliance with the requirements of paragraph (g) of this section, may continue in elevated temperature material service if they meet the applicable requirements of subparts A and B of this part and if, after March 30, 1995, closures are secured during transport to resist opening in an overturn and no opening exceeds 46 cm^2 (7.1 in^2).

(3) *Molten metals and molten glass.* This section does not apply to packagings used for transportation of molten metals and molten glass by rail when movement is restricted to operating speeds less than 15 miles per hour. (See §172.203(g)(3) of this subchapter for shipping paper requirements.)

(4) *Solid elevated temperature materials.* A material which meets the definition of a solid elevated temperature material is excepted from all requirements of this subchapter except §172.325 of this subchapter.

[Amdt. 173–227, 58 FR 3349, Jan. 8, 1993, as amended by Amdt. 173–234, 58 FR 51532, Oct. 1, 1993; 173–237, 59 FR 28493, June 2, 1994; 62 FR 51560, Oct. 1, 1997]

§173.249 Bromine.

When §172.101 of this subchapter specifies that a hazardous material be packaged under this section, only the following bulk packagings are authorized, subject to the requirements of subparts A and B of part 173 of this subchapter and the special provisions specified in Column 7 of the §172.101 Table.

(a) Class DOT 105A300W or 105A500W tank cars. Class 105A500W tank cars may be equipped with manway cover plates, pressure relief valves, vent valves, and loading/unloading valves that are required on Class 105A–300W tank cars. Tank cars must conform with paragraphs (d) through (f) of this section.

(b) Specification MC 310, MC 311, MC 312 or DOT 412 cargo tank motor vehicles conforming with paragraphs (d) through (f) of this section. The total quantity in one tank may not be less than 88 percent nor more than 96 percent of the volume of the tank. Cargo tanks in bromine service built prior to August 31, 1991 may continue in service under the requirements contained in §173.252(a)(4) of this part in effect on September 30, 1991.

(c) Specification IM 101 portable tanks conforming with paragraphs (d) through (f) of this section. The total quantity in one tank may not be less than 88 percent nor more than 92 percent of the volume of the tank.

(d) The tank must be made from nickel-clad or lead-lined steel plate. Nickel cladding or lead lining must be on the inside of the tank. Nickel cladding must comprise at least 20 percent of the required minimum total thickness. Nickel cladding must conform to ASTM Specification B162–69. Lead lining must be at least 4.763 mm (0.188 inch) thick. All tank equipment and appurtenances in contact with the lading must be lined or made from metal not subject to deterioration by contact with lading.

(e) Maximum filling density is 300 percent of the tank's water capacity. Minimum filling density is 287 percent of the tank's water capacity. Maximum water capacity is 9,253 kg (20,400 pounds) for DOT 105A300W tank cars. Maximum quantity of lading in DOT 105A300W tank cars is 27,216 kg (60,000 pounds). Maximum water capacity is 16,964 kg (37,400 pounds) for DOT 105A500W tank cars and DOT 105A500W tank cars equipped as described in paragraph (a) of this section. Maximum quantity of lading in DOT 105A500W tank cars is 49,895 kg (110,000 pounds).

(f) Tank shell and head thickness for cargo tank motor vehicles and portable tanks must be at least 9.5 mm (0.375 inch) excluding lead lining.

[Amdt. 173–224, 55 FR 52663, Dec. 21, 1990, as amended at 56 FR 66275, Dec. 20, 1991]

Subpart G—Gases; Preparation and Packaging

§ 173.300 [Reserved]

§ 173.300a Approval of independent inspection agency.

(a) Any person who (1) does not manufacture cylinders for use in the transportation of hazardous materials and (2) is not directly or indirectly controlled by any person or firm which manufactures cylinders for use in the transportation of hazardous materials, may apply to the Department of Transportation for approval as an independent inspection agency for the purpose of performing cylinder inspections and verifications required by part 178 of this subchapter.

(b) Each application filed under this section for approval as an independent inspection agency must:

(1) Be submitted in writing to: Associate Administrator for Hazardous Materials Safety, U.S. Department of Transportation, Washington, DC 20590–0001;

(2) State the name, address, principal business activity, and telephone number of the applicant and the name and address of each facility where tests and inspections are to be performed;

(3) State the name, address and principal business activity of each person having any direct or indirect ownership interest in the applicant greater than three percent and of each subsidiary or division of the applicant;

(4) If the applicant is not a permanent resident of the United States, include a designation of a permanent resident of the United States as his agent for service of process in accordance with § 107.7 of this title;

(5) Set forth a detailed description of the inspection and testing facilities to be used by the applicant and the applicant's capability to perform the inspections and verify the tests required by part 178 of this subchapter;

(6) Identify by name each individual whom the applicant proposes to employ as an inspector responsible for certifying inspection and test results and a statement of that person's qualifications; and

(7) Specify the identification or qualification number assigned to each inspector who is supervised by a certifying inspector identified in § 173.300a(b)(6).

(c) Upon the request of the Associate Administrator for Hazardous Materials Safety the applicant shall allow the Associate Administrator or his or her representative to inspect the applicant's inspection and testing facilities. In the case of inspection and testing facilities located outside the United States, the applicant shall bear the cost of the inspection.

(d) If, on the basis of information submitted in the application and his own investigation, the Associate Administrator for Hazardous Materials Safety finds that the applicant is qualified to perform the inspections and verifications required by part 178 of this subchapter for cylinders to be used in the transportation of hazardous materials, he issues an approval subject to such terms and conditions as he considers necessary. After approval, the Associate Administrator for Hazardous Materials Safety, may authorize, upon request, the independent inspection agency to perform other inspections and functions for which the Associate Administrator for Hazardous Materials Safety, finds the applicant to be qualified. Such additional authorizations will be noted on each inspector's approval documents.

(e) The Associate Administrator for Hazardous Materials Safety will issue an approval as an independent inspection agency for the purpose of performing inspections and verifications within the United States to any competent and disinterested inspector of cylinders so designated by the Bureau of Explosives before May 1, 1976, who submits a copy of that designation by July 15, 1976, together with the name, the assigned identification or qualification number, and a statement of the qualifications of each person employed as an inspector under that designation to: Associate Administrator for Hazardous Materials Safety, U.S. Department of Transportation, Washington, DC 20590–0001.

(f) Notwithstanding any requirement of this subchapter to the contrary, between May 30, 1976, and August 15, 1976, inspections and verifications required by part 178 of this subchapter may be

performed within the United States by any competent and disinterested inspector so designated by the Bureau of Explosives prior to May 1, 1976.

(g) An approval issued under this section is not transferable and is effective until surrendered or withdrawn or otherwise terminated by the Associate Administrator for Hazardous Materials Safety.

(h) The holder of an approval issued under this section shall notify the Associate Administrator for Hazardous Materials Safety within 20 days after the date there is any change in the information submitted in the application for the approval.

(i) Upon the request of the Associate Administrator for Hazardous Materials Safety the holder of an approval issued under this section shall allow the Director to inspect the holder's inspection and testing facilities and shall make available for inspection the holder's records pertaining to inspections and verifications required by part 178 of this subchapter. In the case of inspection and testing facilities located outside the United States and records made available for inspection outside the United States, the holder shall bear the costs of inspection.

[Amdt. 173–97, 41 FR 18414, May 4, 1976, as amended by Amdt. 173–142, 45 FR 81572, Dec. 11, 1980; Amdt. 173–158, 47 FR 43065, Sept. 30, 1982; Amdt. 173–194 50 FR 46056, Nov. 6, 1985; Amdt. 173–223, 55 FR 39981, Oct. 1, 1990; Amdt. 173–224, 56 FR 66279, Dec. 20, 1991; Amdt. 173–256, 61 FR 51338, Oct. 1, 1996]

§173.300b Approval of non-domestic chemical analyses and tests.

(a) Any person who manufactures cylinders outside the United States may apply to the Department for approval to have the chemical analyses and tests of those cylinders required by part 178 of this subchapter performed outside the United States for the purpose of qualifying them for use in the transportation of hazardous materials to, from or within the United States.

(b) Each application filed under this section for approval to perform chemical analyses and tests of cylinders outside the United States must:

(1) Be submitted in writing to: Associate Administrator for Hazardous Materials Safety, U.S. Department of Transportation, Washington, DC 20590–0001;

(2) State the name, address, and telephone number of the applicant and the name, address and a description of each facility at which cylinders are to be manufactured and chemical analyses and tests are to be performed;

(3) If the applicant is not a resident of the United States, include a designation of a permanent resident of the United States as his agent for service of process in accordance with §107.7 of this title;

(4) Set forth complete details concerning the dimension, materials of construction, wall thickness, water capacity, shape, type of joints, location and size of openings and other pertinent physical characteristics of each specification cylinder for which approval is being requested, including calculations for cylinder wall stress and wall thickness which may be shown on a drawing or on separate sheets attached to a descriptive drawing. If units of weights and measures are expressed in the metric system, they must also be stated in the English system equivalents; and

(5) Identify the independent inspection agency to be used.

(c) Upon the request of the Associate Administrator for Hazardous Materials Safety the applicant shall allow the Director to inspect the applicant's cylinder manufacturing and testing facilities and shall provide such materials and cylinders for analyses and tests as the Director may specify. The applicant shall bear the cost of the inspections, analyses, and tests.

(d) If, on the basis of the information submitted in the application and his own investigation, the Associate Administrator for Hazardous Materials Safety finds that the applicant has the proper manufacturing equipment and facilities and is otherwise capable of insuring the proper performance of the chemical analyses and tests required by part 178 of this subchapter for cylinders to be used in the transportation of hazardous materials, he issues an approval, subject to such terms and conditions as he considers necessary.

(e) An approval issued under this section is not transferable and is effective

until surrendered or withdrawn or otherwise terminated by the Associate Administrator for Hazardous Materials Safety.

(f) The holder of an approval issued under this section shall notify the Associate Administrator for Hazardous Materials Safety within 20 days after the date there is any change in the information submitted in the application for the approval.

(g) Upon the request of the Associate Administrator for Hazardous Materials Safety the holder of an approval issued under this section shall allow the Director to inspect the holder's cylinder manufacturing and testing facilities, any cylinder manufactured under that approval, the holder's inspection and test records, and technical data files pertaining to any cylinder manufactured under that approval. In the case of facilities located outside the United States, or cylinders, records or files made available for inspection outside the United States, the holder shall bear the costs of inspection.

[Amdt. 173–97, 41 FR 18415, May 4, 1976, as amended by Amdt. 173–142, 45 FR 81572, Dec. 11, 1980; Amdt. 173–158, 47 FR 43065, Sept. 30, 1982; Amdt. 173–223, 55 FR 39981, Oct. 1, 1990; Amdt. 173–224, 56 FR 66279, Dec. 20, 1991]

§ 173.300c Termination of approval.

(a) The Associate Administrator for Hazardous Materials Safety may terminate an approval issued under § 173.300a or § 173.300b of this subpart if he determines:

(1) That information upon which approval was based is fraudulent or substantially erroneous;

(2) That the holder has not complied with subchapter C of this chapter;

(3) That, in the case of an independent inspection agency, the agency or an employee thereof is or appears to be controlled or improperly influenced by cylinder manufacturing interests;

(4) That the holder is subject to an outstanding final judgment of a Federal court which concerns the enforcement of subchapter C of this chapter and which has not been satisfied within a reasonable period of time; or

(5) That continuation of the approval is not consistent with the requirements of transportation safety.

(b) The Associate Administrator for Hazardous Materials Safety, before he terminates an approval issued under § 173.300a or § 173.300b of this subpart, notifies the holder in writing of the reasons therefor and provides the holder an opportunity to show why the approval should not be terminated.

[Amdt. 173–97, 41 FR 18415, May 4, 1976, as amended by Amdt. 173–142, 45 FR 81572, Dec. 11, 1980; Amdt. 173–224, 56 FR 66279, Dec. 20, 1991]

§ 173.301 General requirements for shipment of compressed gases in cylinders and spherical pressure vessels.

(a) *Gases capable of combining chemically*. A cylinder charged with compressed gas must not contain gases or materials that are capable of combining chemically with each other or with the cylinder material so as to endanger its serviceability. See § 173.34(e)(17) regarding the requalification of a cylinder that previously contained a corrosive liquid.

(b) *Ownership of container.* A container charged with a compressed gas must not be shipped unless it was charged by or with the consent of the owner of the container.

(c) *Retest of container.* A container for which prescribed periodic retest has become due must not be charged and shipped until such retest has been properly made.

(d) *Manifolding containers in transportation.* No means of interconnecting such as manifolding of individual containers may be employed for the transportation of compressed gases, except as hereinafter authorized. Containers so manifolded shall be supported and held together as a unit by structurally adequate means. Safety relief devices on manifolded horizontal containers charged with flammable compressed gas shall be arranged to discharge upward and unobstructed to the open air in such a manner as to prevent any impingement of escaping gas upon the containers.

(1) Manifolding is authorized for containers of the following gases: argon, air, carbon dioxide, helium, neon, nitrogen, nitrous oxide, oxygen or sulfur hexafluoride provided that each container is individually equipped with

pressure relief devices as required by § 173.34(d) or § 173.315(i).

(2) Manifolding is authorized for specification cylinders containing the following nonliquefied gases: boron trifluoride, carbon monoxide, ethylene, hydrogen, hydrocarbon gases, methane, nitrogen trifluoride, and tetrafluoroethylene, inhibited, except that aluminum cylinders are not authorized for boron trifluoride or nitrogen trifluoride service. Individual cylinders must be equipped with approved pressure relief devices as required by § 173.34(d) or § 173.315(i) of this part. Each cylinder must be equipped with an individual shutoff valve that must be tightly closed while in transit. Manifold branch lines of these individual shutoff valves must be sufficiently flexible to prevent damage to the valves which otherwise might result from the use of rigid branch lines. A temperature measuring device may be inserted in one cylinder of a manifold installation in place of the shutoff valve.

(3) Manifolding is authorized for specification cylinders containing the following gases: 1,1–Difluoroethylene, ethane, ethylene, hydrogen chloride, liquefied hydrocarbon gas, liquefied petroleum gas and propylene, except that aluminum cylinders are not authorized for hydrogen chloride service, provided each cylinder is equipped with approved pressure relief devices as required by § 173.34(d) or § 173.315(i) of this part: *and provided further,* that each cylinder is equipped with an individual shutoff valve that must be tightly closed while in transit. Each cylinder must be separately charged and means must be provided to insure that no interchange of cylinder contents can occur during transportation. Manifold branch lines to these individual shutoff valves must be sufficiently flexible to prevent injury to the valves which otherwise might result from the use of rigid branch lines.

(4) Manifolding is authorized for containers of acetylene, provided that each container is individually equipped with approved safety relief devices as required by § 173.34(d): *And further provided,* That each container is equipped with an individual shutoff valve, or valves, which shall be tightly closed while in transit. Manifold branch lines to these individual shutoff valves shall be sufficiently flexible to prevent injury to the valves which otherwise might result from the use of rigid branch lines. All manifold containers shall be transported in a vertical position. For the checking of tare weights or for replacement of solvent the container shall be removed from the manifold. This requirement is not intended to prohibit the charging of the acetylene cylinders while manifolded.

(5) Manifolding is authorized for cargo tanks of the following gas provided individual cargo tanks are equipped with the safety relief valves and gaging devices, as required by § 173.315(h) and (i): *And further provided,* That each cargo tank is equipped with individual valve, or valves, which shall be tightly closed while in transit and that each such container must be separately charged: Anhydrous ammonia.

(e) *Container pressure.* The pressure in the container at 70° F. must not exceed the service pressure for which the container is marked or designated, except as provided in § 173.302(c).

NOTE 1: In certain cases with liquefied gases the pressure at 70° F. must be lower than the marked service pressure to avoid having a greater pressure at a temperature of 130° F. than is permitted.

(1) For authorized containers not marked with a service pressure, the service pressure is designated as follows:

Specification marking	Service pressure—psig
DOT 3	1,800
3E	1,800
4	300
8	250
9	200
25	300
33	480
38	250
40	200
41	240

(2) For containers made prior to the effective date of specifications, the service pressure is designated as the same as for the same type of container made in accordance with current specifications.

(f) *Container pressure at 130° F.* The pressure in the container at 130° F.

shall not exceed 5/4 times the service pressure, except:

(1) Containers charged with acetylene, liquefied nitrous oxide and liquefied carbon dioxide.

(2) When a cylinder is charged in accordance with § 173.302(c), the pressure in the cylinder at 130° F. must not exceed 5/4 times the filling pressure authorized therein.

(g) *Container valve protection.* Containers charged with flammable, corrosive, or noxious gases, must have their valves protected by one of the following methods:

(1) By equipping the containers with securely attached metal caps of sufficient strength to protect the valves from injury during transit.

(2) By boxing or crating the containers so as to give proper protection to the valves.

(3) By so constructing the containers that the valve is recessed into the container or otherwise protected so that it will not be subjected to a blow when the container is dropped on a flat surface.

(4) By loading the containers compactly in an upright position and securely bracing in cars or motor vehicles, when loaded by the consignor and to be unloaded by the consignee.

(5) By equipping with valves strong enough to avoid damage during transit for containers containing non-liquefied gas under pressure not exceeding 300 psi at 70° F.

(h) *Compressed gas containers.* Compressed gases must be in metal containers built in accordance with the DOT specifications, as shown below, in effect at the time of manufacture, and marked as required by the specification and the regulation for retesting if applicable;

PACKAGINGS

DOT–2P	DOT–3D	DOT–4BW	DOT–8AL.
2Q	3E	4B240ET	9.[1]
ICC–3[1]	3HT	4C	1CC–25.[1]
DOT–3A	DOT–3T	4D	26.[1]
DOT– 3AL.			
DOT–3AX	4	4DA	33.[1]
3A480X	4A	4DS	38.[1]
3AA	4AA	4E	DOT–39.
DOT–3AAX	4B	4L	40.[1]
3B	4B240FLW	5	41.[1]
3BN	4B240X[1]	5F.	
3C	4BA	8.	

[1] Use of existing cylinders authorized, but new construction not authorized.

(i) *Foreign cylinders in domestic use.* Except as provided in paragraph (j) of this section, a charged cylinder manufactured outside the United States may not be offered for transportation to, from, or within the United States unless it has been manufactured, inspected, and tested in accordance with the applicable DOT specification set forth in part 178 of this subchapter.

(j) *Charging of foreign cylinders for export.* (1) A cylinder manufactured outside the United States that has not been manufactured, inspected, tested and marked in accordance with part 178 of this subchapter may be charged with compressed gas in the United States, and shipped solely for export if it meets the following requirements, in addition to other requirements of the subchapter:

(i) It has been inspected, tested and marked (with only the month and year of retest) in conformance with the procedures and requirements of § 173.34(e) or the Associate Administrator for Hazardous Materials Safety has authorized the charging company to fill foreign cylinders under an alternative method of qualification; and

(ii) It meets the maximum filling density and service pressure requirements of this part.

(2) The bill of lading or other shipping paper must identify the cylinder and carry the following certification: ''This cylinder has [These cylinders

have] been retested and refilled in accordance with DOT requirements for export.''

(k) *Outside packagings.* Specification 2P, 2Q, 3E, 3HT, 4BA spherical type, 4D, 4DA, 4DS, 9[1], 39, 40[1], and 41[1] must be shipped in strong outside packagings, except that the 4BA spherical type may be securely mounted on pallets to provide protection for the spheres and any attachments.

(1) Outside packaging must provide protection for the cylinder. Unless the cylinder has a protective collar or neck ring, the outside packaging must provide protection to the valve against accidental functioning and damage.

(l) Specifications 3AX, 3AAX, and 3T cylinders are authorized for transportation only when horizontally mounted on a motor vehicle or in an ISO framework or other framework of equivalent structural integrity. Cylinders may be transported in COFC or TOFC service only under conditions approved by the Associate Administrator for Safety, Federal Railroad Administration. Cylinder valves and safety devices must be protected as follows:

(1) Each cylinder must be fixed at one end of the vehicle or framework with provision for thermal expansion at the opposite end attachment.

(2) The valve and safety relief device protective structure must be sufficiently strong to withstand a force equal to twice the weight involved with a safety factor of four, based on the ultimate strength of the material used; and

(3) Each discharge for a safety relief device on a cylinder containing a flammable gas must be upward and unobstructed.

[29 FR 18743, Dec. 29, 1964. Redesignated at 32 FR 5606, Apr. 5, 1967]

EDITORIAL NOTE: For FEDERAL REGISTER citations affecting §173.301, see the List of CFR Sections Affected appearing in the Finding Aids section of this volume.

§173.302 Charging of cylinders with non-liquefied compressed gases.

(a) *Detailed requirements.* Nonliquefied compressed gases (except gas in solution) for which charging requirements are not definitely prescribed in §173.304(a)(2) must be shipped, subject to §173.301, and §173.305 in specification containers as follows:

(1) Specification 3,[1] 3A, 3AA, 3B, 3C,[1] 3D,[1] 3E, 4,[1] 4A,[1] 4B, 4BA, 4BW, 4C,[1] 25,[1] 26,[1] 33,[1] or 38,[1] (§§178.36, 178.37, 178.38, 178.42, 178.50, 178.51, 178.61 of this subchapter). See §§173.34 and 173.301(e).

NOTE 1: Authorized cylinders containing oxygen which is continuously fed to tanks containing live fish may be shipped irrespective of the provisions of §173.24.

(2) Specification 3HT (§178.44 of this subchapter) cylinders for aircraft use only, having a maximum service life of 24 years. Authorized only for nonflammable gases. Cylinders must be equipped with safety relief devices only of the frangible disc type which meet the requirements of §173.34(d). Each frangible disc must have a rated bursting pressure which does not exceed 90 percent of the minimum required test pressure of the cylinder. Discs with fusible metal backing are not permitted. Spec. 3HT cylinders may be shipped only when packed in strong outside packagings.

(3) Specification 3AX, 3AAX, or 3T (§§178.36, 178.37, 178,45 of this subchapter) cylinders are authorized only for the following nonliquefied gases: Air, argon, boron trifluoride, carbon monoxide, ethane, ethylene, helium, hydrogen, methane, neon, nitrogen, or oxygen, except that specification 3T is not authorized for hydrogen. As used in this paragraph methane is a nonliquefied gas which has a minimum purity of 98.0 percent methane and which is commerically free of corroding components.

(4) Specification 39 (§178.65 of this subchapter) cylinder. For flammable gases, internal volume may not exceed 75 cubic inches. Aluminum cylinders are authorized for oxygen only under the following conditions:

(i) Cylinder threads must be straight threads;

(ii) Cylinder must be equipped only with brass or stainless steel valve; and

(iii) Each cylinder must be cleaned in compliance with the requirements of Federal Specification RR–C–901c, dated

[1] Use of existing cylinders authorized, but new construction not authorized.

[1] Use of existing cylinders authorized, but new construction not authorized.

January 15, 1981, paragraphs 3.7.2 and 3.8.2. Cleaning agents equivalent to those specified in RR–C–901c, may be used; however any cleaning agent must not be capable of reacting with oxygen. One cylinder selected at random from a group of 200 or less cleaned at the same time, must be tested for oil contamination in accordance with specification RR–C–901c, paragraph 4.4.2.3 and meet the standard of cleanliness specified.

(5) Specification 3AL (§ 178.46 of this subchapter) cylinders are authorized only for the following nonliquefied gases: air, argon, carbon monoxide, diborane, ethylene, helium, mercury free hydrogen, krypton, methane, nitrogen, neon, oxygen and xenon. Flammable gases shipped in 3AL cylinders are authorized only when transported by highway, rail and cargo–only aircraft. When used in oxygen service, aluminum cylinders must be in compliance with the following conditions:

(i) Cylinder must be equipped only with brass or stainless steel valve;

(ii) Cylinder must have only straight threads in the opening;

(iii) Each cylinder must be cleaned in compliance with the requirements of Federal Specification RR–C–901c, dated August 1, 1967, paragraphs 3.7.2, and 3.8.2. Cleaning agents equivalent to those specified in RR–C–901c may be used; however, any cleaning agent must not be capable of reacting with oxygen. One cylinder selected at random from a group of 200 or less, cleaned at the same time, must be tested for oil contamination in accordance with Specification RR–C–901c, paragraph 4.4.2.3, and meet the standard of cleanliness specified; and

(iv) The pressure in the cylinder may not exceed 3,000 psig at 70° F.

(b) *Filling limits.* (See § 173.301(e).)

(c) *Special filling limits for Specifications 3A, 3AX, 3AA, 3AAX, and 3T cylinders.* Specifications 3A, 3AX, 3AA, 3AAX, and 3T (§§ 178.36, 178.37, 178.45 of this subchapter) cylinders may be charged with compressed gases, other than liquefied, dissolved, poisonous, or flammable gases to a pressure 10 percent in excess of their marked service pressure, provided:

(1) That such cylinders are equipped with frangible disc safety relief devices (without fusible metal backing) having a bursting pressure not exceeding the minimum prescribed test pressure.

(2) That the elastic expansion shall have been determined at the time of the last test or retest by the water jacket method.

(3) That either the average wall stress or the maximum wall stress does not exceed the wall stress limitation shown in the following table (see Notes 1, 2 and 3):

Type of steel	Average wall stress limitation	Maximum wall stress limitation
Plain carbon steels over 0.35 carbon and medium manganese steels	53,000	58,000
Steels of analysis and heat-treatment specified in spec. 3AA	67,000	73,000
Steel of analysis and heat treatment specified in Spec. DOT–3T	87,000	94,000
Plain carbon steels less than 0.35 carbon made prior to 1920	45,000	48,000

NOTE 1: The average wall stress shall be computed from the elastic expansion data using the following formula:

$$S=1.7EE/KV—0.4P$$

where:

S=wall stress, pounds per square inch;
EE=elastic expansion (total less permanent) in cubic centimeters;
K=factor$\times 10^{-7}$, experimentally determined for the particular type of cylinder being tested, or derived in accordance with CGA Pamphlet C–5;
V= internal volume in cubic centimeter (1 cubic inch=16.387 cubic centimeters);
P= test pressure, pounds per square inch.

Formula derived from formula of Note 2 and the following:

$$EE=(PKVD^2)/(D^2-d^2)$$

NOTE 2: The maximum wall stress shall be computed from the formula:

$$S=(P(1.3D^2+0.4d^2))/(D^2-d^2)$$

where:

S= wall stress, pounds per square inch;
P= test pressure, pounds per square inch;
D= outside diameter, inches;
$d=D-2t$, where t= minimum wall thickness determined by a suitable method

NOTE 3: Compliance with average wall stress limitation may be determined through computation of the elastic expansion rejection limit in accordance with CGA Pamphlet C–5 or through the use of the manufacturer's marked elastic expansion rejection limit (REE) on the cylinder.

(4) That an external and internal visual examination made at the time of test or retest shows the cylinder to be free from excessive corrosion, pitting, or dangerous defects.

(5) That a plus sign (+) be added following the test date marking on the cylinder to indicate compliance with paragraphs (c) (2), (3), and (4) of this section.

(d) *Fluorine.* Fluorine must be shipped in Specification 3A1000, 3AA1000, or 3BN400 (§178.36, §178.37 or §178.39 of this subchapter) cylinders without safety relief device and equipped with valve protection cap. Such containers must not be charged to over 400 p.s.i.g. at 70° F. and must not contain over 6 pounds of gas.

(e) *Verification of container pressure.* (1) Each day, the pressure in a container representative of that day's compression must be checked by the charging plant after the container has cooled to a settled temperature and a record of this test kept for at least 30 days.

(f) *Carbon monoxide.* Carbon monoxide must be shipped in a Specification 3A, 3AX, 3AA, 3AAX, 3AL, 3, 3E, or 3T, (§§178.36, 178.37, 178.46, 178.42, 178.45 of this subchapter) cylinder having a minimum service pressure of 1,800 psig. The pressure in the cylinder must not exceed 1000 psig at 70° F. except that if the gas is dry and sulfur free, the cylinder may be charged to five-sixths of the cylinder service pressure or 2000 psig, whichever is the lesser. Specification 3AL cylinders are authorized only when transported by highway, rail and cargo–only aircraft.

(g) *Diborane and diborane mixtures.* Diborane and diborane mixed with compatible compressed gas in Specification 3AA1800 (§178.37 of this subchapter), cylinders. The maximum filling density of the diborane shall not exceed 7 percent. Diborane mixed with compatible compressed gas must not have a pressure exceeding the service pressure of the cylinder if complete decomposition of the diborane occurs. Cylinder valves must be protected either by metal caps or by over packing cylinder in strong wooden boxes.

(h) *Poisonous mixtures.* Cylinders containing poison gases and poison gas mixtures meeting Division 2.3 *Hazard Zone A* must conform to the requirements of §173.40 of this part.

[29 FR 18743, Dec. 29, 1964. Redesignated at 32 FR 5606, Apr. 5, 1967]

EDITORIAL NOTE: For FEDERAL REGISTER citations affecting §173.302, see the List of CFR Sections Affected appearing in the Finding Aids section of this volume.

§173.303 Charging of cylinders with compressed gas in solution (acetylene).

(a) *Cylinder, filler and solvent requirements.* (Refer to applicable parts of Specification 8 and 8AL). Acetylene gas must be shipped in Specification 8 or 8AL (§178.59 or §178.60 of this subchapter) cylinders. The cylinders shall consist of metal shells filled with a porous material, and this material must be charged with a suitable solvent. The cylinders containing the porous material and solvent, shall be tested with satisfactory results in accordance with CGA Pamphlet C–12. Representative samples of cylinders charged with acetylene shall be tested with satisfactory results in accordance with CGA Pamphlet C–12.

(1) The specific gravity of acetone solvent in acetylene cylinders must be 0.796 or over at 15.5° C. (59.9° F.).

(2) The amount of solvent added in the refilling operation must not cause the tare weight of the cylinder to exceed its marked tare weight. The tare weight includes the weight of the cylinder shell, porous filling, valve, safety relief devices and solvent, but without removable cap.

(b) *Filling limits.* The pressure in cylinders containing acetylene gas must not exceed 250 psi at 70° F., and in case the cylinders are marked for a lower allowable charging pressure, at 70° F., then that pressure must not be exceeded.

(c) *Data requirements on filler and solvent.* Cylinders containing acetylene gas must not be shipped unless they were charged by or with the consent of the owner, and by a person, firm, or company having possession of complete information as to the nature of the porous filling, the kind and quantity of solvent in the cylinders, and the meaning of such markings on the cylinders as are prescribed by the Department's regulations and specifications applying

to containers for the transportation of acetylene gas.

(d) *Verification of container pressure.* (1) Each day, the pressure in a container representative of that day's compression must be checked by the charging plant after the container has cooled to a settled temperature and a record of this test kept for at least 30 days.

(e) *Prefill requirements.* Before each filling of an acetylene cylinder, the person filling the cylinder must visually inspect the outside of the cylinder in accordance with the prefill requirements contained in CGA Pamphlet C–13, Section 3.

[29 FR 18743, Dec. 29, 1964. Redesignated at 32 FR 5606, Apr. 5, 1967]

EDITORIAL NOTE: For FEDERAL REGISTER citations affecting § 173.303, see the List of CFR Sections Affected appearing in the Finding Aids section of this volume.

§ 173.304 Charging of cylinders with liquefied compressed gas.

(a) *Detailed charging requirements.* Liquefied gases shall be charged in accordance with the specific provisions of paragraph (a)(2) of this section or paragraph (e) of this section. Where charging requirements are not specifically prescribed, liquefied gases, except gas in solution, must be shipped, subject to the applicable paragraphs under General Requirements for Shipment (see § 173.301), the charging requirements of this section for liquefied compressed gas, or the charging requirements for mixtures (see § 173.305), in containers manufactured under specifications, as follows:

(1) Specification 3,[1] 3A, 3AA, 3B, 3BN, 3D[1] 3E, 4,[1] 4A,[1] 4B, 4BA, 4B240ET, 4BW, 4E, 9,[1] 25,[1] 26,[1] 38,[1] 39, 40,[1] or 41,[1] (§§ 178.36, 178.37, 178.38, 178.39, 178.42, 178.50, 178.51, 178.55, 178.61, 178.65, 178.68 of this subchapter), except that no Specification 4E, 9, 39, 40, 41 packaging may be charged and shipped with a mixture containing a pyroforic liquid, carbon bisulfide (disulfide), ethyl chloride, ethylene oxide, nickel carbonyl, spirits of nitroglycerin, or poisonous material (Division 6.1 or 2.3), unless specifically authorized in this part.

(2) The following requirements must be complied with for the gases named (for cryogenic liquids, see § 173.316):

Kind of gas	Maximum permitted filling density (percent) (see Note 1)	Containers marked as shown in this column or of the same type with higher service pressure must be used except as provided in § 173.34 (a), (b), § 173.301(j) (see notes following table)
Anhydrous ammonia	54	DOT–4; DOT–3A480; DOT–3AA480; DOT–3A480X; DOT–4A480; DOT–3; DOT–4AA480; DOT–3E1800; DOT–3AL480.
Bromotri- fluoro- methane (R–13B1 or H–1301).	124	DOT–3A400; DOT–3AA400; DOT–3B400; DOT–4A400; DOT–4AA480; DOT–4B400; DOT–4BA400; DOT–4BW400; DOT–3E1800; DOT–39; DOT–3AL400.
Carbon dioxide (see notes 4, 7, and 8)	68	DOT–3A1800; DOT–3AX1800; DOT–3AA1800; DOT–3AAX1800; DOT–3; DOT–3E1800; DOT–3T1800; DOT–3HT2000; DOT–39; DOT–3AL1800.
Carbon dioxide, refrigerated liquid (see paragraph (h)).		DOT–4L.
Chlorine (see Note 2)	125	DOT–3A480; DOT–3AA480; DOT–25; DOT–3; DOT–3BN480; DOT–3E1800.
Chlorodifluroethane (R-142b) *or* 1-chloro-1, 1-difluoroethane (see Note 8).	100	DOT–3A150; DOT–3AA150; DOT–3B150; DOT–4B150; DOT–4BA225; DOT–4BW225; DOT–3E1800; DOT–39, DOT–3AL150.
Chlorodifluoromethane (R-22) (see Note 8).	105	DOT–3A240; DOT–3AA240; DOT–3B240; DOT–4B240; DOT–4BA240; DOT–4BW240; DOT–4B240ET; DOT–4E240; DOT–39; DOT–41; DOT–3E1800; and DOT–3ALA240.
Chloropentafluorethane, (R–115)	110	DOT–3A225; DOT–3AA225; DOT–3B225; DOT–4A225; DOT–4BA225; DOT–4B225; DOT–4BW225; DOT–3E1800; DOT–39; and DOT–3AL225.
Chlorotrifluoromethane (R-13) (see Note 8).	100	DOT–3A1800; DOT–3AA1800; DOT–3; DOT–3E1800; DOT–39; and DOT–3AL1800.

[1] Use of existing cylinders authorized, but new construction not authorized.

Kind of gas	Maximum permitted filling density (percent) (see Note 1)	Containers marked as shown in this column or of the same type with higher service pressure must be used except as provided in § 173.34 (a), (b), § 173.301(j) (see notes following table)
Cyclopropane (see Notes 8 and 9)	55	DOT–3A225; DOT–3A480X; DOT–3AA225; DOT–3B225; DOT–4A225; DOT–4AA480; DOT–4B225; DOT–4BA225; DOT–4BW225; DOT–4B240ET; DOT–3; DOT–3E1800; DOT–39; and DOT–3AL225.
Dichlorodifluoromethane (R-12) (see Note 8).	119	DOT–3A225; DOT–3AA225; DOT–3B225; DOT–4A225; DOT–4B225; DOT–4BA225; DOT–4BW225; DOT–4B240ET; DOT–4E225; DOT–9; DOT–39; DOT–41; DOT–3E1800; and DOT–3AL225.
Dichlorodifluoromethane and difluoroethane mixture (constant boiling mixture) (R–500) (see Note 8).	Not liquid full at 130° F..	DOT–3A240; DOT–3AA240, DOT–3B240; DOT–3E1800; DOT–4A240; DOT–4B240; DOT–4BA240; DOT–4BW240; DOT–4E240; DOT–9, DOT–39.
Difluoroethane (R–152a) (see Note 8)	79	DOT–3A150; DOT–3AA150; DOT–3B150; DOT–4B150; DOT–4BA225; DOT–4BW225; DOT–3E1800; DOT–3AL150.
1,1-Difluoroethylene (R–1132A)	73	DOT–3A2200, DOT–3AA2200, DOT–3AX2200, DOT–3AAX2200, DOT–3T2200, DOT–39.
Dimethylamine, anhydrous	59	DOT–3A150; DOT–3AA150; DOT–3B150; DOT–4B150 DOT–4BA225; DOT–4BW225; ICC–3E1800.
Ethane (see Notes 8 and 9)	35.8	DOT–3A1800; DOT–3AX1800; DOT–3AA1800; DOT–3AAX1800; DOT–3; DOT–3E1800; DOT–3T1800; DOT–39; DOT–3AL1800.
Ethane (see Notes 8 and 9)	36.8	DOT–3A2000; DOT–3AX2000; DOT–3AA2000; DOT–3AAX2000; DOT–3T2000; DOT–39; DOT–3AL2000.
Ethylene (see Notes 8 and 9)	31.0	DOT–3A1800; DOT–3AX1800 DOT–3AA1800; DOT–3AAX1800; DOT–3; DOT–3E1800; DOT–3T1800; DOT–39; and DOT–3AL1800 .
Ethylene (see Notes 8 and 9)	32.5	DOT–3A2000; DOT–3AX2000; DOT–3AA2000; DOT–3AAX2000; DOT–3T2000; DOT–39; and DOT–3AL2000.
Ethylene (see Notes 8 and 9)	35.5	DOT–3A2400; DOT–3AX2400; DOT–3AA2400; DOT–3AAX2400; DOT–3T2400; DOT–39; DOT–3AL2400.
Hydrogen chloride	65	DOT–3A1800; DOT–3AA1800; DOT–3AX1800; DOT–3AAX1800; DOT–3; DOT–3T1800; DOT–3E1800.
Hydrogen sulfide (see Note 10)	62.5	DOT–3A480; DOT–3AA480; DOT–3B480; DOT–4A480; DOT–4B480; DOT–4BA480; DOT–4BW480.; DOT–26–480; DOT–3E1800; DOT–3AL480.
Insecticide, liquefied gas (See Notes 8 and 12).	Not liquid full at 130 °F.	DOT–3A300; DOT–3AA300; DOT–3B300; DOT–4B300; DOT–4BA300; DOT–4BW300; DOT–9; DOT–40; DOT–41; DOT–3E1800.
Liquefied nonflammable gases, liquid other than those classified as flammable, corrosive, or poisonous, and mixtures or solutions thereof, charged with nitrogen, carbon dioxide, or air (see Notes 7 and 8).	Not liquid full at 130° F.	Specification packaging authorized in paragraph (a)(1) of this section and DOT–3HT; DOT–4D; DOT–4DA; DOT–4DS.
Methylacetylene-propadiene, stabilized (see Note 5).	Not liquid full at 130° F.	DOT–4B240 without brazed seams; DOT–4BA240 without brazed seams; DOT–3A240; DOT–3AA240; DOT–3B240; DOT–3E1800; DOT–4BW240; DOT–4E240; DOT–4B240ET; DOT–4; DOT–41; DOT–3AL240.
Methyl chloride	84	DOT–3A225; DOT–3AA225; DOT–3B225; DOT–4A225; DOT–4B225; DOT–4BA225; DOT–4BW225; DOT–3; DOT–4; DOT–25; DOT–26–300; DOT–38; DOT–3E1800; DOT–4B240ET. Cylinders complying with DOT–3A150; DOT–3B150; DOT–4A150, and DOT–4B150 manufactured prior to Dec. 7, 1936 are also authorized.
Methyl mercaptan	80	DOT–3A240; DOT–3AA240; DOT–3B240; DOT–4B240; DOT–4B240ET; DOT–3E1800; DOT–4BA240; DOT–4BW240.
Monomethylamine, anhydrous	60	DOT–3A150; DOT–3AA150; DOT–3B150; DOT–4B150; DOT–4BA225; DOT–4BW225; DOT–3E1800.
Nitrosyl chloride	110	DOT–3BN400 only.
Nitrous oxide (see Notes 7, 8, and 11)	68	DOT–3A1800; DOT–3AX1800; DOT–3AA1800; DOT–3AAX1800; DOT–3; DOT–3E1800; DOT–3T1800; DOT–3HT2000; DOT–39; DOT–.AL1800.
Nitrous oxide, refrigerated liquid (see paragraph (h)).		DOT–4L.
Refrigerant gas, n.o.s. or Dispersant gas, n.o.s. (see Notes 8 and 13).	Not liquid full at 130 °F.	DOT–3A240; DOT–3AA240; DOT–3B240; DOT–3E1800; DOT–4A240; DOT–4B240; DOT–4BA240; DOT–4BW240; DOT–4E240; DOT–9; DOT–39; and DOT–3AL240.

Kind of gas	Maximum permitted filling density (percent) (see Note 1)	Containers marked as shown in this column or of the same type with higher service pressure must be used except as provided in § 173.34 (a), (b), § 173.301(j) (see notes following table)
Sulfur dioxide (see note 8)	125	DOT–3A225; DOT–3AA225; DOT–3B225; DOT–4A225; DOT–4B225; DOT–4BA225; DOT–4BW225; DOT–4B240ET; DOT–3; DOT–4; DOT–25; DOT–26–150; DOT–38; DOT–39; DOT–3E1800; and DOT–3AL225.
Sulfur hexafluoride	120	DOT–3A1000; DOT–3AA1000; DOT–3AAX2400; DOT–3; DOT–3AL1000; DOT–3E1800; DOT–3T1800.
Sulfuryl fluoride	106	DOT–3A480; DOT–3AA480; DOT–3E1800; DOT–4B480; DOT–4BA480; DOT–4BW480.
Tetrafluoroethylene, inhibited	90	DOT–3A1200; DOT–3AA1200; DOT–3E1800.
Trifluorochloroethylene	115	DOT–3A300; DOT–3AA300; DOT–3B300; DOT–4A300; DOT–4B300; DOT–4BA300; DOT–4BW300; DOT–3E1800.
Trimethylamine, anhydrous	57	DOT–3A150; DOT–3AA150; DOT–3B150; DOT–4B150; DOT–4BA225; DOT–4BW225; DOT–3E1800.
Vinyl chloride (see Note 5)	84	DOT–4B150 without brazed seams; DOT–4BA225 without brazed seams; DOT–4BW225; DOT–3A150; DOT–3AA150; DOT–25; DOT–3E1800; DOT–3AL150.
Vinyl fluoride, inhibited	62	DOT–3A1800; DOT–3AA1800; DOT–3E1800; DOT–3AL1800.
Vinyl methyl ether (see Note 5)	68	DOT–4B150, without brazed seams; DOT–4BA225 without brazed seams; DOT–4BW225; DOT–3A150; DOT–3AA150; DOT–3B150; DOT–25; DOT–3E1800.

NOTE 1: The ''filling density'' is hereby defined as the percent ratio of the weight of gas in a container to the weight of water that the container will hold at 60 °F. (1 lb of water=27.737 cubic inches at 60 °F.).

NOTE 2: Cylinders purchased after Oct. 1, 1944, for the transportation of chlorine must contain no aperture other than that provided in the neck of the cylinder for attachment of a valve equipped with an approved safety relief device. Cylinders purchased after Nov. 1, 1935, and charged with chlorine must not contain over 150 pounds of gas.

NOTE 3: [Reserved]

NOTE 4: Special carbon dioxide mining devices containing a heating element and charged with not over 6 pounds of carbon dioxide may be filled to a density of not over 85 percent, provided the cylinder is made of steel with a calculated bursting pressure in excess of 39,000 psi, be fitted with a frangible disc that will operate at not over 57 percent of that pressure, and be able to withstand a drop of 10 feet when striking crosswise on a steel rail while under a pressure of at least 3,000 psi. Such devices must be shipped in strong boxes or must be wrapped in heavy burlap and bound by 12-gauge wire with the wire completely covered by friction tape. Wrapping must be applied so as not to interfere with the functioning of the frangible disc safety relief device. Shipments must be described as ''liquefied carbon dioxide gas (mining device)'' and marked, labeled, and certified as prescribed for liquefied carbon dioxide.

NOTE 5: All parts of valve and safety relief devices in contact with contents of cylinders must be of a metal or other material, suitably treated if necessary, which will not cause formation of any acetylides.

NOTE 6: [Reserved]

NOTE 7: Specification 3HT cylinders for aircraft use only, having a maximum service life of 24 years. Authorized only for nonflammable gases. Cylinders must be equipped with pressure relief devices only of the frangible disc type which meet the requirements of § 173.34(d). Each frangible disc must have a rated bursting pressure which does not exceed 90 percent of the minimum required test pressure of the cylinder. Discs with fusible metal backing are not permitted. Cylinders may be shipped only when packed in strong outside packagings.

NOTE 8: See § 173.301(k).

NOTE 9: When used for shipment of flammable gases, the internal volume of a specification 39 cylinder must not exceed 75 cubic inches.

NOTE 10: Each valve outlet must be sealed by a threaded cap or a threaded solid plug.

NOTE 11: See § 173.304(a)(4).

NOTE 12: For an insecticide gas which is nonpoisonous and nonflammable, see § 173.305(c).

NOTE 13: For a refrigerant or dispersant gas which is nonpoisonous and nonflammable, see § 173.304(e).

(3) Specification 3AL (§ 178.46 of this subchapter) cylinders are authorized for the following liquefied gases: cyclobutane, hydrogen selenide, propylene, silane, carbonyl sulfide, vinyl bromide, and dimethyl ether. Shipments of flammable gases are authorized only when transported by highway, rail and cargo aircraft only.

(4) Specification DOT 3AL (§ 178.46 of this subchapter) cylinders when used in nitrous oxide service must be in compliance with the following conditions:

(i) Cylinder must be equipped only with brass or stainless steel valve; and

(ii) Each cylinder must be cleaned in compliance with the requirements of Federal Specification RR–C–901c paragraphs 3.7.2 and 3.8.2. Cleaning agents equivalent to those specified in RR–C–901c may be used; however, any cleaning agent must not be capable of reacting with oxygen. One cylinder selected at random from a group of 200 or less cleaned at the same time must be tested for oil contamination in accordance with Specification RR–C–901c paragraph 4.4.2.3 and meet the standard of cleanliness specified.

(b) *Filling limits.* Except for carbon dioxide, 1,1–Difluoroethylene (R–1132A), nitrous oxide and vinyl fluoride, inhibited, the liquid portion of a liquefied

gas must not completely fill the packaging at any temperature up to and including 130°F. The liquid portion of vinyl fluoride, inhibited, may completely fill the cylinder at 130°F. provided the pressure at the critical temperature does not exceed one and one-fourth times the service pressure.

(c) *Verification of content in cylinder.* (1) Liquefied gases must be charged by weight, by volume measurement of liquid, charging line, by the use of proper scales or when lower in pressure than required for liquefaction a pressure-temperature chart may be used in charging to insure that the service pressure at 70° F. times 5/4 will not be exceeded at 130° F.

(2) Except as noted in paragraph (d)(4) of this section, the amount of liquefied gas charged into a container must be determined by weight, or if charged at a pressure lower than the liquefaction point, by pressure shown on a chart for the specific gas. Weight must be checked, after disconnecting from the charging line, by the use of proper scales.

(d) *Requirements for liquefied petroleum gas.* (1) Filling density limited as follows:

Minimum specific gravity of the liquid material at 60° F.	Maximum filling density in percent of the water-weight capacity of the container
0.271 to 0.289	26
0.290 to 0.306	27
0.307 to 0.322	28
0.323 to 0.338	29
0.339 to 0.354	30
0.355 to 0.371	31
0.372 to 0.398	32
0.399 to 0.425	33
0.426 to 0.440	34
0.441 to 0.452	35
0.453 to 0.462	36
0.463 to 0.472	37
0.473 to 0.480	38
0.481 to 0.488	39
0.489 to 0.495	40
0.496 to 0.503	41
0.504 to 0.510	42
0.511 to 0.519	43
0.520 to 0.527	44
0.528 to 0.536	45
0.537 to 0.544	46
0.545 to 0.552	47
0.553 to 0.560	48
0.561 to 0.568	49
0.569 to 0.576	50
0.577 to 0.584	51
0.585 to 0.592	52
0.593 to 0.600	53
0.601 to 0.608	54
0.609 to 0.617	55
0.618 to 0.626	56
0.627 to 0.634	57

(2) Subject to § 173.301(f), any filling density percentage prescribed in this section is authorized to be increased by 2 for liquefied petroleum gas in Spec. 26 or 3 cylinders or in Spec. 3A marked for 1,800 psig, or higher, service pressure.

(3) Liquefied petroleum gas must be shipped in specification containers as follows:

(i) Specification 3,[1] 3A, 3AA, 3B, 3E, 3AL, 4B, 4BA, 4B240FLW, 4B240ET, 4BW, 4B240X,[1] 4E, 4,[1] 4A,[1] 9,[1] 25,[1] 26,[1] 38,[1] 39, or 41[1] (§§ 178.36, 178.37, 178.38, 178.42, 178.46, 178.50, 178.51, 178.54, 178.55, 178.61, 178.65, 178.68 of this subchapter) cylinders. The internal volume of a Specification 39 cylinder must not exceed 75 cubic inches. Shipments of flammable gases in 3AL cylinders are authorized only when transported by highway, rail and cargo–only aircraft.

NOTE 1: Cylinders marked as complying with DOT Spec. 4B240FLW bearing manufacturer's symbol WCO and serial numbers 47A–1 to 47A–59200, inclusive, varying from the specification requirements as to physical properties of steel, are authorized for the transportation of liquefied petroleum gases.

(ii) Additional containers may be used within the limits of quantity and pressure as follows:

[1] Use of existing cylinders authorized, but new construction not authorized.

Type of container	Maximum capacity		Maximum charging pressure—p.s.i.g.
	Cubic inches	Gallons	
DOT–2P or DOT–2Q (see Note 1)	31.83		45 p.s.i.g. at 70° F. and 105 p.s.i.g. at 130° F. (see Note 2).
DOT–2P or DOT–2Q (see Note 1)	31.83		35 p.s.i.g. at 70° F. and 100 p.s.i.g. at 130° F.
DOT–3C or DOT–4C	3,881	16+5% tolerance	145 p.s.i.g. at 130° F.

NOTE 1: Containers must be packed in strong wooden or fiber boxes of such design as to protect valves from injury or accidental functioning under conditions incident to transportation. Each completed container filled for shipment must have been heated until contents reached a minimum temperature of 130° F., without evidence of leakage, distortion, or other defect. Each outside shipping container must be plainly marked ''INSIDE CONTAINERS COMPLY WITH PRESCRIBED SPECIFICATIONS.''

NOTE 2: Containers must be equipped with safety relief devices which will prevent rupture of the containers and dangerous projection of the closing devices when the containers are exposed to the action of fire.

(4) Verification of content. Containers with a water capacity of 200 pounds or more and for use with a liquefied petroleum gas with a specific gravity at 60° F. of 0.504 or greater may have their contents determined by using a fixed length dip tube gauging device. The length of the dip tube shall be such that when a liquefied petroleum gas with a specific volume of 0.03051 cu. ft./lb. at a temperature of 40° F. is charged into the container it just reaches the bottom of the tube. The weight of this liquid shall not exceed 42 percent of the water capacity of the container which must be stamped thereon. The length of the dip tube, expressed in inches carried out to one decimal place and prefixed with the letters ''DT'' shall be stamped on the container and on the exterior of removable type dip tube; for the purpose of this requirement the marked length shall be expressed as the distance measured along the axis of a straight tube from the top of the boss through which the tube is inserted to the proper level of the liquid in the container. The length of each dip tube shall be checked when installed by weighing each container after filling except when installed in groups of substantially identical containers in which case one of each 25 containers shall be weighed. The quantity of liquefied gas in each container must be checked by means of the dip tube after disconnecting from the charging line. The outlet from the dip tube shall be not larger than a No. 54 drill size orifice. A container representative of each day's filling at each charging plant shall have its contents checked by weighing after disconnecting from the charging line.

(e) *Refrigerant gases.* Refrigerant gases which are nonpoisonous and nonflammable under this part, must be shipped in cylinders as prescribed in paragraph (a) (1) or (2) of this section, or as follows:

(1) Specifications 2P and 2Q (§§ 178.33, 178.33a of this subchapter). Inside metal containers packed in a strong wooden or fiberboard box of such design as to protect valves from injury or accidental functioning under conditions incident to transportation. Pressure in the container must not exceed 85 pounds per square inch absolute at 70° F. Each completed metal container filled for shipment must be heated until content reaches a minimum temperature of 130° F. without evidence of leakage, distortion, or other defect. Each outside shipping container must be plainly marked ''Inside Containers Comply With Prescribed Specification.''

(f) *Engine starting fluid.* Engine starting fluid containing compressed gas or gases which are flammable under this part must be shipped in cylinders as prescribed in paragraph (a)(1) of this section, or as follows:

(1) Inside nonrefillable metal containers having a capacity not over 32 cubic inches. Containers must be packaged in strong, tight packagings. Pressure in the container must not exceed 140 psi, absolute, at 130° F. However, if the pressure exceeds 140 psi, absolute at 130° F., a Spec. 2P (§ 178.33 of this subchapter) container must be used. In any event, the metal container

must be capable of withstanding without bursting a pressure of one and one-half times the pressure of the content at 130° F. The liquid content of the material and gas must not completely fill the container at 130° F. Each completed container filled for shipment must have been heated until content reaches a minimum temperature of 130° F., without evidence of leakage, distortion, or other defect. Each outside shipping container must be plainly marked, ''INSIDE CONTAINERS COMPLY WITH PRESCRIBED SPECIFICATIONS.''

(g) *Poisonous mixtures.* Cylinders containing poison gases and poison gas mixtures meeting Division 2.3 *Hazard Zone A* must conform to the requirements of § 173.40 of this part.

(h) *Carbon dioxide, refrigerated liquid or nitrous oxide, refrigerated liquid.* (1) The following provisions apply to carbon dioxide, refrigerated liquid and nitrous oxide, refrigerated liquid:

(i) DOT 4L cylinders conforming to the provisions of this paragraph are authorized.

(ii) Each cylinder must be protected with at least one pressure relief valve and at least one frangible disc conforming to §§ 173.34(d) and 173.304(a)(2). The relieving capacity of the pressure relief device system must be equal to or greater than that calculated by the applicable formula in paragraph 5.9 of CGA Pamphlet S–1.1.

(iii) The temperature and pressure of the gas at the time of loading may not exceed −18 °C (0 °F) and 2007 kPa (291 psig) for carbon dioxide and −15.6 °C (+4 °F) and 2007 kPa (291 psig) for nitrous oxide. Maximum time in transit may not exceed 120 hours.

(2) The following pressure control valve settings, design service temperatures and filling densities apply:

Pressure control valve setting maximum start—to discharge gauge pressure in kPa (psig)	Maximum permitted filling density (percent by weight)	
	Carbon dioxide, refrigerated liquid	Nitrous oxide, refrigerated liquid
724 kPa (105 psig)	108	104
1172 kPa (170 psig)	105	101
1586 kPa (230 psig)	104	99
2034 kPa (295 psig)	102	97
2483 kPa (360 psig)	100	95
3103 kPa (450 psig)	98	83
3723 kPa (540 psig)	92	87
4309 kPa (625 psig)	86	80
Design service temperature °C (°F)	−196 °C (−320 °F)	−196 °C (−320 °F)

[29 FR 18743, Dec. 29, 1964. Redesignated at 32 FR 5606, Apr. 5, 1967]

EDITORIAL NOTE: For FEDERAL REGISTER citations affecting § 173.304, see the List of CFR Sections Affected appearing in the Finding Aids section of this volume.

§ 173.305 Charging of cylinders with a mixture of compressed gas and other material.

(a) *Detailed requirements.* A mixture of a compressed gas and any other material must be shipped as a compressed gas if the mixture is a compressed gas as designated in § 173.115 and when not in violation of § 173.301(a).

(b) *Filling limits.* (See § 173.301(e).) For mixtures, the liquid portion of the liquefied compressed gas at 130° F. plus any additional liquid or solid must not completely fill the container.

(c) *Nonpoisonous and nonflammable mixtures.* Mixtures containing compressed gas or gases including insecticides, which mixtures are nonpoisonous and nonflammable under this part must be shipped in cylinders as prescribed in § 173.304(a) or as follows:

(1) Specification 2P (§ 178.33 of this subchapter). Inside metal containers equipped with safety relief devices of a type examined by the Bureau of Explosives and approved by the Associate Administrator for Hazardous Materials Safety, and packed in strong wooden or fiber boxes of such design as to protect valves from injury or accidental functioning under conditions incident to transportation. Pressure in the container may not exceed 85 psia at 70°F. Each completed metal container filled

for shipment must be heated until content reaches a minimum temperature of 130°F., without evidence of leakage, distortion or other defect. Each outside shipping container must be plainly marked ''INSIDE CONTAINERS COMPLY WITH PRESCRIBED SPECIFICATIONS.''

(d) *Poisonous mixtures.* A mixture containing any poisonous material (Division 6.1 or 2.3) in such proportions that the mixture would be classed as poisonous under § 173.115 or § 173.132 must be shipped in packagings as authorized for these poisonous materials.

[29 FR 18743, Dec. 29, 1964. Redesignated at 32 FR 5606, Apr. 5, 1967, and amended by Amdt. 173–70, 38 FR 5309, Feb. 27, 1973, Amdt. 173–94, 41 FR 16079, Apr. 15, 1976; 45 FR 32697, May 19, 1980; Amdt. 173–224, 56 FR 66275, 66279, Dec. 20, 1991]

§ 173.306 Limited quantities of compressed gases.

(a) Limited quantities of compressed gases for which exceptions are permitted as noted by reference to this section in § 172.101 of this subchapter are excepted from labeling (except when offered for transportation by air) and, unless required as a condition of the exception, specification packaging requirements of this subchapter when packed in accordance with the following paragraphs. In addition, shipments are not subject to subpart F of part 172 of this subchapter, to part 174 of this subchapter except § 174.24 and to part 177 of this subchapter except § 177.817. Each package may not exceed 30 kg (66 pounds) gross weight.

(1) When in containers of not more than 4 fluid ounces capacity (7.22 cubic inches or less) except cigarette lighters. Special exceptions for shipment of certain compressed gases in the ORM–D class are provided in paragraph (h) of this section.

(2) When in metal containers filled with a material that is not classed as a hazardous material to not more than 90 percent of capacity at 70° F. and then charged with nonflammable, nonliquefied gas. Each container must be tested to three times the pressure at 70° F. and, when refilled, be retested to three times the pressure of the gas at 70° F. Also, one of the following conditions must be met:

(i) Container is not over 1 quart capacity and charged to not more than 170 psig at 70° F. and must be packed in a strong outside packaging, or

(ii) Container is not over 30 gallons capacity and charged to not more than 75 psig at 70° F.

(3) When in a metal container for the sole purpose of expelling a nonpoisonous (other than a Division 6.1 Packing Group III material) liquid, paste or powder, provided all of the following conditions are met. Special exceptions for shipment of aerosols in the ORM–D class are provided in paragraph (h) of this section.

(i) Capacity must not exceed one liter (61.0 cubic inches).

(ii) Pressure in the container must not exceed 180 psig at 130° F. If the pressure exceeds 140 psig at 130° F., but does not exceed 160 psig at 130° F., a specification DOT 2P (§ 178.33 of this subchapter) inside metal container must be used; if the pressure exceeds 160 psig at 130° F., a specification DOT 2Q (§ 178.33a of this subchapter) inside metal container must be used. In any event, the metal container must be capable of withstanding without bursting a pressure of one and one-half times the equilibrium pressure of the content at 130° F.

(iii) Liquid content of the material and gas must not completely fill the container at 130° F.

(iv) The container must be packed in strong outside packagings.

(v) Each container must be subjected to a test performed in a hot water bath; the temperature of the bath and the duration of the test must be such that the internal pressure reaches that which would be reached at 55°C (131°F) (50°C (122°F) if the liquid phase does not exceed 95% of the capacity of the container at 50°C (122°F)). If the contents are sensitive to heat, the temperature of the bath must be set at between 20°C (68°F) and 30°C (86°F) but, in addition, one container in 2,000 must be tested at the higher temperature. No leakage or permanent deformation of a container may occur.

(vi) Each outside packaging must be marked ''INSIDE CONTAINERS COMPLY WITH PRESCRIBED REGULATIONS.''

(4) Gas samples must be transported under the following conditions:

(i) A gas sample may only be transported as non-pressurized gas when its pressure corresponding to ambient atmospheric pressure in the container is not more than 105 kPa absolute (15.22 psia).

(ii) Non-pressurized gases, toxic (or toxic and flammable) must be packed in hermetically sealed glass or metal inner packagings of not more than one L (0.3 gallons) overpacked in a strong outer packaging.

(iii) Non-pressurized gases, flammable must be packed in hermetically-sealed glass or metal inner packagings of not more than 2.5 L (0.5 gallons) overpacked in a strong outer packaging.

(b) *Exemptions for foodstuffs, soap, biologicals, electronic tubes, and audible fire alarm systems.* Limited quantities of compressed gases, (except poisonous gases as defined by §173.115(a)(3) of this part) for which exceptions are provided as indicated by reference to this section in §172.101 of this subchapter, when in accordance with one of the following paragraphs are excepted from labeling (except when offered for transportation by air) and the specification packaging requirements of this subchapter. In addition, shipments are not subject to subpart F of part 172 of this subchapter, to part 174 of this subchapter except §174.24 and to part 177 of this subchapter, except §177.817. Special exceptions for shipment of certain compressed gases in the ORM–D class are provided in paragraph (h) of this section.

(1) Foodstuffs or soaps in a nonrefillable metal container not exceeding one liter (61.0 cubic inches), with soluble or emulsified compressed gas, provided the pressure in the container does not exceed 140 p.s.i.g. at 130° F. The metal container must be capable of withstanding without bursting a pressure of one and one-half times the equilibrium pressure of the content at 130° F.

(i) Containers must be packed in strong outside packagings.

(ii) Liquid content of the material and the gas must not completely fill the container at 130° F.

(iii) Each outside packaging must be marked ''INSIDE CONTAINERS COMPLY WITH PRESCRIBED REGULATIONS.''

(2) Cream in refillable metal receptacles with soluble or emulsified compressed gas. Containers must be of such design that they will hold pressure without permanent deformation up to 375 psig and must be equipped with a device designed so as to release pressure without bursting of the container or dangerous projection of its parts at higher pressures. This exception applies to shipments offered for transportation by refrigerated motor vehicles only.

(3) Nonrefillable metal containers charged with a Division 6.1 Packing Group III or nonflammable solution containing biological products or a medical preparation which could be deteriorated by heat, and compressed gas or gases. The capacity of each container may not exceed 35 cubic inches (19.3 fluid ounces). The pressure in the container may not exceed 140 psig at 130° F., and the liquid content of the product and gas must not completely fill the containers at 130° F. One completed container out of each lot of 500 or less, filled for shipment, must be heated, until the pressure in the container is equivalent to equilibrium pressure of the content at 130° F. There must be no evidence of leakage, distortion, or other defect. Container must be packed in strong outside packagings.

(4) Electronic tubes, each having a volume of not more than 30 cubic inches and charged with gas to a pressure of not more than 35 psig and packed in strong outside packagings.

(5) Audible fire alarm systems powered by a compressed gas contained in an inside metal container when shipped under the following conditions:

(i) Each inside container must have contents which are not flammable, poisonous, or corrosive as defined under this part,

(ii) Each inside container may not have a capacity exceeding 35 cubic inches (19.3 fluid ounces),

(iii) Each inside container may not have a pressure exceeding 70 psig at 70° F. and the liquid portion of the gas may not completely fill the inside container at 130° F., and

(iv) Each nonrefillable inside container must be designed and fabricated with a burst pressure of not less than four times its charged pressure at 130° F. Each refillable inside container must be designed and fabricated with a burst pressure of not less than five times its charged pressure at 130° F.

(c) [Reserved]

(d) *Truck bodies or trailers on flat cars; automobiles, motorcycles, tractors, or other self-propelled vehicles.* (1) Except as specified in § 173.21, truck bodies or trailers with automatic heating or refrigerating equipment of the gas burning type may be shipped with tanks containing fuel and equipment operating or not operating, when used for the transportation of other freight and loaded on flat cars as part of a joint rail-highway movement. The heating or refrigerating equipment is considered to be a part of the truck body or trailer and is not subject to any other requirements of this subchapter.

(2) Automobiles, motorcycles, tractors, or other self-propelled vehicles equipped with liquefied petroleum gas or other compressed gas fuel tanks, provided such tanks are securely closed, are not subject to any other requirements for transportation by rail or highway. For transportation by water, see §§ 176.905 and 176.78(k) of this subchapter. For transportation by air, the fuel tank must be removed or emptied and securely closed.

(3) A cylinder which is a component part of a passenger restraint system and is installed in a motor vehicle, charged with nonliquefied, nonflammable compressed gas and having no more than two actuating cartridges per valve, is excepted from the requirements of parts 170–189 of this subchapter except:

(i) Unless otherwise authorized by the Department, each cylinder must be in compliance with one of the cylinder specifications in part 178 of this subchapter and authorized for use in § 173.302 for the gas it contains;

(ii) Each cylinder must be in compliance with the filling requirements of § 173.301; and

(iii) Each actuating cartridge must be approved in accordance with § 173.56.

(4) A cylinder which is part of a tire inflator system in a motor vehicle, charged with a nonliquefied, nonflammable compressed gas is excepted from the requirements of parts 170–189 of this subchapter except:

(i) Unless otherwise authorized by the Department, each cylinder must be in compliance with one of the cylinder specifications in part 178 and authorized for use in § 173.302 for the gas it contains;

(ii) Each cylinder must be in compliance with the filling requirements of § 173.301.

(iii) Each cylinder must be securely installed in the trunk of the motor vehicle and the valve must be protected against accidental discharge.

NOTE: A cylinder containing a gas generator may be included within the provisions of this exception if the requirements of § 173.34(d) are satisfied.

(e) *Refrigerating machines.* (1) New (unused) refrigerating machines or components thereof are excepted from the specification packaging requirements of this part if they meet the following conditions. In addition, shipments are not subject to subpart F of part 172 of this subchapter, to part 174 of this subchapter except § 174.24 and to part 177 of this subchapter except § 177.817.

(i) Each pressure vessel may not contain more than 5,000 pounds of Group A1 refrigerant as classified in ANSI/ASHRAE Standard 15 or not more than 50 pounds of refrigerant other than Group A1.

(ii) Machines or components having two or more charged vessels may not contain an aggregate of more than 2,000 pounds of Group I refrigerant or more than 100 pounds of refrigerant other than Group I.

(iii) Each pressure vessel must be equipped with a safety device meeting the requirements of ANSI/ASHRAE 15.

(iv) Each pressure vessel must be equipped with a shut-off valve at each opening except openings used for safety devices and with no other connection. These valves must be closed prior to and during transportation.

(v) Pressure vessels must be manufactured, inspected and tested in accordance with ANSI/ASHRAE 15, or when over 6 inches internal diameter, in accordance with the ASME Code.

(vi) All parts subject to refrigerant pressure during shipment must be tested in accordance with ANSI/ASHRAE 15.

(vii) The liquid portion of the refrigerant, if any, may not completely fill any pressure vessel at 130° F.

(viii) The amount of refrigerant, if liquefied, may not exceed the filling density prescribed in § 173.304.

(f) *Accumulators.* The following applies to accumulators, which are hydraulic accumulators containing nonliquefied, nonflammable gas, and nonflammable liquids or pneumatic accumulators containing nonliquefied, nonflammable gas, fabricated from materials which will not fragment upon rupture.

(1) Accumulators installed in motor vehicles, construction equipment, and assembled machinery and designed and fabricated with a burst pressure of not less than five times their charged pressure at 70° F., when shipped, are not subject to the requirements of this subchapter.

(2) Accumulators charged with limited quantities of compressed gas to not more than 200 p.s.i.g. at 70° F. are excepted from labeling (except when offered for transportation by air) and the specification packaging requirements of this subchapter when shipped under the following conditions. In addition, shipments are not subject to subpart F of part 172 of this subchapter, to part 174 of this subchapter except § 174.24 and to part 177 of this subchapter except § 177.817.

(i) Each accumulator must be shipped as an inside packaging,

(ii) Each accumulator may not have a gas space exceeding 2,500 cubic inches under stored pressure, and

(iii) Each accumulator must be tested, without evidence of failure or damage, to at least three times its charged pressure of 70° F., but not less than 120 p.s.i. before initial shipment and before each refilling and reshipment.

(3) Accumulators with a charging pressure exceeding 200 p.s.i.g. at 70° F. are excepted from labeling (except when offered for transportation by air) and the specification packaging requirements of this subchapter when shipped under the following conditions:

(i) Each accumulator must be in compliance with the requirements stated in paragraph (f)(2), (i), (ii), and (iii) of this section, and

(ii) Each accumulator must be designed and fabricated with a burst pressure of not less than five times its charged pressure at 70° F. when shipped.

(g) *Water pump system tank.* Water pump system tanks charged with compressed air or limited quantities of nitrogen to not over 40 psig for single-trip shipment to installation sites are excepted from labeling (transportation by air not authorized) and the specification packaging requirements of this subchapter when shipped under the following conditions. In addition, shipments are not subject to subpart F of this subchapter, to part 174 of this subchapter except § 174.24 and part 177 except § 177.817.

(1) The tank must be of steel, welded with heads concave to pressure, having a rated water capacity not exceeding 120 gallons and with outside diameter not exceeding 24 inches. Safety relief devices not required.

(2) The tank must be pneumatically tested to 100 psig. Test pressure must be permanently marked on the tank.

(3) The stress at prescribed pressure must not exceed 20,000 psi using formula:

$$S = Pd/2t$$

where:

S=wall stress in pounds per square inch:

P=prescribed pressure for the tank of at least 3 times charged pressure at 70° F or 100 psig, whichever is greater;

d=inside diameter in inches;

t=minimum wall thickness, in inches.

(4) The burst pressure must be at least 6 times the charge pressure at 70° F.

(5) Each tank must be overpacked in a strong outside container in accordance with § 173.301(k).

(h) A limited quantity which conforms to the provisions of paragraph (a)(1), (a)(3), or (b) of this section and is a ''consumer commodity'' as defined in § 171.8 of this subchapter, may be renamed ''consumer commodity'' and reclassed as ORM–D material. Each package may not exceed 30 kg (66 pounds)

gross weight. In addition to the exceptions provided by paragraphs (a) and (b) of this section—

(1) Outside packagings are not required to be marked ''INSIDE CONTAINERS COMPLY WITH PRESCRIBED REGULATIONS'';

(2) Shipments of ORM–D materials are not subject to the shipping paper requirements of subpart C of part 172 of this subchapter, unless the material meets the definition of a hazardous substance or hazardous waste or unless offered for transportation or transported by aircraft; and

(3) Shipments of ORM-D materials are eligible for the exceptions provided in § 173.156.

(i) An aerosol is flammable if a positive test result is obtained using any of the following test methods:

(1) Using the Bureau of Explosives' Flame Projection Apparatus, the flame projects more than 18 inches beyond the ignition source with valve opened fully, or the flame flashes back and burns at the valve with any degree of valve opening.

(2) Using the Bureau of Explosives' Open Drum Apparatus, there is any significant propagation of flame away from the ignition source.

(3) Using the Bureau of Explosives' Closed Drum Apparatus, there is any explosion of the vapor-air mixture in the drum.

[Amdt. 173–94, 41 FR 16079, Apr. 15, 1976]

EDITORIAL NOTE: For FEDERAL REGISTER citations affecting § 173.306, see the List of CFR Sections Affected appearing in the Finding Aids section of this volume.

§ 173.307 Exceptions for compressed gases.

(a) The following materials are not subject to the requirements of this subchapter:

(1) Carbonated beverages.

(2) Except as provided in § 175.10(a)(2) of this subchapter, tires when inflated to pressures not greater than their rated inflation pressures.

(3) Balls used for sports.

(4) Refrigerating machines including dehumidifiers and air conditioners, and components thereof such as precharged tubing containing 25 pounds or less of nonflammable liquefied gas.

(b) [Reserved]

[Amdt. 173–94, 41 FR 16081, Apr. 15, 1976, as amended by Amdt. 173–135, 45 FR 13090, Feb. 28, 1980]

§ 173.308 Cigarette lighter or other similar device charged with fuel.

(a) In addition to the requirements of § 173.21(i), a cigarette lighter or other similar device charged with a flammable gas must be shipped as follows:

(1) No more than 70 ml (2.3 fluid ounces) of liquefied gas may be loaded into each device;

(2) The liquid portion of the gas may not exceed 85 percent of the volumetric capacity of each fluid chamber at 15 °C (59 °F);

(3) Each device, including closures, must be capable of withstanding without leakage or rupture an internal pressure of at least two times the vapor pressure of the fuel at 55 °C (131 °F); and

(4) Devices must be overpacked in packaging that is designed or arranged to prevent movement of the device itself.

(b) When no more than 1,500 devices covered by this section are transported in one motor vehicle by highway, the requirements of parts 172 and 177 of this subchapter do not apply.

(c) For transportation by water in a closed transport vehicle or a closed freight container, the following warning must be affixed to the access doors:

WARNING—MAY CONTAIN EXPLOSIVE MIXTURES WITH AIR—KEEP IGNITION SOURCES AWAY WHEN OPENING.

The warning must be on a contrasting background and must be readily legible from a distance of 8 m (26 feet).

[Amdt. 173–94, 41 FR 16081, Apr. 15, 1976, as amended by Amdt. 173–94A, 41 FR 40683, Sept. 20, 1976; Amdt. 173–120, 43 FR 39792, Sept. 7, 1978; Amdt. 173–165, 48 FR 28101, June 20, 1983; Amdt. 173–224, 55 FR 52665 Dec. 21, 1990; 56 FR 66276, Dec. 20, 1991]

§ 173.309 Fire extinguishers.

(a) Fire extinguishers charged with a limited quantity of compressed gas to not more than 1660 kPa (241 psig) at 21 °C (70 °F) are excepted from labeling (except when offered for transportation by air) and the specification packaging requirements of this subchapter when

shipped under the following conditions. In addition, shipments are not subject to subpart F of part 172 of this subchapter, to part 174 of this subchapter except §174.24 or to part 177 of this subchapter except §177.817.

(1) Each fire extinguisher must have contents which are nonflammable, nonpoisonous, and noncorrosive as defined under this subchapter.

(2) Each fire extinguisher must be shipped as an inner packaging.

(3) Nonspecification cylinders are authorized subject to the following conditions:

(i) The internal volume of each cylinder may not exceed 18 liters (1,100 cubic inches). For fire extinguishers not exceeding 900 ml (55 cubic inches) capacity, the liquid portion of the gas plus any additional liquid or solid must not completely fill the container at 55 °C (130 °F). Fire extinguishers exceeding 900 ml (55 cubic inches) capacity may not contain any liquefied compressed gas;

(ii) Each fire extinguisher manufactured on and after January 1, 1976, must be designed and fabricated with a burst pressure of not less than six times its charged pressure at 21 °C (70 °F) when shipped;

(iii) Each fire extinguisher must be tested, without evidence of failure or damage, to at least three times its charged pressure at 21 °C (70 °F) but not less than 825 kPa (120 psig) before initial shipment, and must be marked to indicate the year of the test (within 90 days of the actual date of the original test) and with the words ''MEETS DOT REQUIREMENTS.'' This marking is considered a certification that the fire extinguisher is manufactured in accordance with the requirements of this section. The words ''This extinguisher meets all requirements of 49 CFR 173.306'' may be displayed on fire extinguishers manufactured prior to January 1, 1976; and

(iv) For any subsequent shipment, each fire extinguisher must be in compliance with the retest requirements of the Occupational Safety and Health Administration Regulations of the Department of Labor, 29 CFR 1910.157(e).

(4) Specification 2P or 2Q (§§178.33 and 178.33a of this subchapter) inner nonrefillable metal packagings are authorized for use as fire extinguishers subject to the following conditions:

(i) The liquid portion of the gas plus any additional liquid or solid may not completely fill the packaging at 55 °C (130 °F);

(ii) Pressure in the packaging shall not exceed 1250 kPa (181 psig) at 55 °C (130 °F). If the pressure exceeds 920 kPa (141 psig) at 55 °C (130 °F), but does not exceed 1100 kPa (160 psig) at 55 °C (130 °F), a specification DOT 2P inner metal packaging must be used; if the pressure exceeds 1100 kPa (160 psig) at 55 °C (130 °F), a specification DOT 2Q inner metal packaging must be used. The metal packaging must be capable of withstanding, without bursting, a pressure of one and one-half times the equilibrium pressure of the contents at 55 °C (130 °F); and

(iii) Each completed inner packaging filled for shipment must have been heated until the pressure in the container is equivalent to the equilibrium pressure of the contents at 55 °C (130 °F) without evidence of leakage, distortion, or other defect.

(b) Specification 3A, 3AA, 3E, 3AL, 4B, 4BA, 4B240ET or 4BW (§§178.36, 178.37, 178.42, 178.46, 178.50, 178.51, 178.55 and 178.61 of this subchapter) cylinders are authorized for use as fire extinguishers.

[Amdt. 173–235, 58 FR 50503, Sept. 27, 1993, as amended by Amdt. 173–138, 59 FR 49134, Sept. 26, 1994; Amdt. 173–258, 61 FR 51240, Oct. 1, 1996]

§173.314 Compressed gases in tank cars and multi-unit tank cars.

(a) *Definitions.* For definitions of compressed gases, see §173.115.

(b) *General requirements.* (1) Tank car tanks containing compressed gases must not be shipped unless they were loaded by or with the consent of the owner thereof.

(2) Tank car tanks must not contain gases capable of combining chemically and must not be loaded with any gas which combines chemically with the gas previously loaded therein, until all residue has been removed and interior of tank thoroughly cleaned.

(3) For tanks of the DOT–106A and 110A class, the tanks must be placed in position and attached to car structure by the shipper.

(4) Wherever the word ''approved'' is used in this part of the regulations, it means approval by the Association of American Railroads Committee on Tank Cars as prescribed in § 179.3 of this subchapter.

(5) Each tank car used for the transportation of anhydrous ammonia or any material that meets the criteria of Division 2.1 or 2.3 must have gaskets for manway cover plates and for mounting of fittings designed (for temperature, application, media, pressure, and size) to create a positive seal so that, under conditions normally incident to transportation, there will not be an identifiable release of the material to the environment. The use of sealants to install gaskets is prohibited.

(c) *Authorized gases, filling limits for tank cars.* A compressed gas in a tank car or a multi-unit tank car must be offered for transportation in accordance with § 173.31 and this section. The named gases must be loaded and offered for transportation in accordance with the following table:

Proper shipping name	Outage and filling limits (see note 1)	Authorized tank car class
Ammonia, anhydrous, or ammonia solutions > 50 percent ammonia.	Notes 2, 10	105, 112, 114, 120.
	Note 3	106.
Ammonia solutions with > 35 percent, but ≤ 50 percent ammonia by mass.	Note 3	105, 109, 112, 114, 120.
Argon, compressed	Note 4	107.
Boron trichloride	Note 3	105, 106.
Carbon dioxide, refrigerated liquid	Note 5	105.
Chlorine	Note 6	105.
	125	106.
Chlorine trifluoride	Note 3	106, 110.
Chlorine pentafluoride	Note 3	106, 110.
Dimethyl ether	Note 3	105, 106, 110, 112, 114, 120.
Dimethylamine, anhydrous	Note 3	105, 106, 112.
Dinitrogen tetroxide, inhibited	Note 3	105, 106, 110.
Division 2.1 materials not specifically identified in this table	Notes 9, 10	105, 106, 110, 112, 114, 120.
Division 2.2 materials not specifically identified in this table	Note 3	105, 106, 109, 110, 112, 114, 120.
Division 2.3 Zone A materials not specifically identified in this table.	None	See § 173.245.
Division 2.3 Zone B materials not specifically identified in this table.	Note 3	105, 106, 110, 112, 114, 120.
Division 2.3 Zone C materials not specifically identified in this table.	Note 3	105, 106, 110, 112, 114, 120.
Division 2.3 Zone D materials not specifically identified in this table.	Note 3	105, 106, 109, 110, 112, 114, 120.
Ethylamine	Note 3	105, 106, 110, 112, 114, 120.
Helium, compressed	Note 4	107.
Hydrogen	Note 4	107.
Hydrogen chloride, refrigerated liquid	Note 7	105.
Hydrogen sulphide, liquified	68	106.
Methyl bromide	Note 3	105, 106.
Methyl chloride	Note 3	105, 106, 112.
Methyl mercaptan	Note 3	105, 106.
Methylamine, anhydrous	Note 3	105, 106, 112.
Nitrogen, compressed	Note 4	107.
Nitrosyl chloride	124	105.
	110	106.
Nitrous oxide, refrigerated liquid	Note 5	105.
Oxygen, compressed	Note 4	107.
Phosgene	Note 3	106.
Sulfur dioxide, liquified	125	105, 106, 110.
Sulfuryl fluoride	120	105.
Vinyl fluoride, inhibited	Note 8	105.

Notes:

1. The percent filling density for liquefied gases is hereby defined as the percent ratio of the mass of gas in the tank to the mass of water that the tank will hold. For determining the water capacity of the tank in kilograms, the mass of one liter of water at 15.5°C in air is 1 kg. (the mass of one gallon of water at 60°F in air is 8.32828 pounds).

2. The liquefied gas must be loaded so that the outage is at least two percent of the total capacity of the tank at the reference temperature of 46° C (115° F) for a noninsulated tank; 43° C (110° F) for a tank having a thermal protection system incorporating a metal jacket that provides an overall thermal conductance at 15.5° C (60° F) of no more than 10.22 kilojoules per hour per square meter per degree Celsius (0.5 Btu per hour/per square foot/per degree F) temperature differential; and 41° C (105° F) for an insulated tank having an insulation system incorporating a metal jacket that provides an overall thermal conductance at 15.5° C (60° F) of no more than 1.5333 kilojoules per hour per square meter per degree Celsius (0.075 Btu per hour/per square foot/per degree F) temperature differential.

3. The requirements of § 173.24b(a) apply.

4. The gas pressure at 54.44 °C (130 °F.) in any non-insulated tank car may not exceed 7/10 of the marked test pressure, except that a tank may be charged with helium to a pressure 10 percent in excess of the marked maximum gas pressure at 54.44 °C (130 °F.) of each tank.
5. The liquid portion of the gas at -17.77 °C (0 °F.) must not completely fill the tank.
6. The maximum permitted filling density is 125 percent. The quantity of chlorine loaded into a single unit-tank car may not be loaded in excess of the normal lading weights nor in excess of 81.65 Mg (90 tons).
7. 89 percent maximum to 80.1 percent minimum at a test pressure of 6.2 Bar (90 psi).
8. 59.6 percent maximum to 53.6 percent minimum at a test pressure of 7.2 Bar (105 psi).
9. For a liquefied petroleum gas, the liquefied gas must be loaded so that the outage is at least one percent of the total capacity of the tank at the reference temperature of 46° C (115° F) for a noninsulated tank; 43° C (110° F) for a tank having a thermal protection system incorporating a metal jacket that provides an overall thermal conductance at 15.5° C (60° F) of no more than 10.22 kilojoules per hour per square meter per degree Celsius (0.5 Btu per hour/per square foot/per degree F) temperature differential; and 41° C (105° F) for an insulated tank having an insulation system incorporating a metal jacket that provides an overall thermal conductance at 15.5° C (60° F) of no more than 1.5333 kilojoules per hour per square meter per degree Celsius (0.075 Btu per hour/per square foot/per degree F) temperature differential.
10. For liquefied petroleum gas and anhydrous ammonia, during the months of November through March (winter), the following reference temperatures may be used: 38° C (100° F) for a noninsulated tank; 32° C (90° F) for a tank having a thermal protection system incorporating a metal jacket that provides an overall thermal conductance at 15.5° C (60° F) of no more than 10.22 kilojoules per hour per square meter per degree Celsius (0.5 Btu per hour/per square foot/per degree F) temperature differential; and 29° C (85° F) for an insulated tank having an insulation system incorporating a metal jacket and insulation that provides an overall thermal conductance at 15.5° C (60° F) of no more than 1.5333 kilojoules per hour per square meter per degree Celsius (0.075 Btu per hour/per square foot/per degree F) temperature differential. The winter reference temperatures may only be used for a tank car shipped directly to a consumer for unloading and not stored in transit. The offeror of the tank must inform each customer that the tank car was filled based on winter reference temperatures. The tank must be unloaded as soon as possible after March in order to retain the specified outage and to prevent a release of hazardous material which might occur due to the tank car becoming liquid full at higher temperatures.

(d) [Reserved]

(e) *Verification of content.* The amount of liquefied gas loaded into each tank may be determined either by measurement or calculation of the weight. If by measurement, the weight must be checked after disconnecting the loading line by the use of proper scales. If by calculation, the weight of liquefied petroleum gas, methylacetylene propadiene, stabilized, dimethylamine, monomethylamine, or trimethylamine may be calculated using the outage tables supplied by the tank car owners and the specific gravities as determined at the plant, and this computation must be checked by determination of specific gravity of product after loading. Carriers may verify calculated weights by use of proper scales. The use of a fixed tube gauge device is authorized for determining the weight of methyl mercaptan in Specification 105A300W tanks instead of weighing.

(f) [Reserved]

(g) Special requirements for hydrogen chloride, refrigerated liquid, and vinyl fluoride, inhibited.

(1) The shipper shall notify the Bureau of Explosives whenever a car is not received by the consignee within 20 days from the date of shipment.

(2) A tank car containing hydrogen chloride, refrigerated liquid must have the auxiliary valve on the pressure relief device closed during transportation.

(3) See § 179.102–17 of this subchapter for additional requirements.

(4) Tank cars containing hydrogen chloride, refrigerated liquid, must be unloaded to such an extent that any residue remaining in the tank at a reference temperature of 32 °C (90 °F) will not actuate the safety relief device.

(h)–(i) [Reserved]

(j) *Special requirements for materials having a primary or secondary Division 2.1 (flammable gas) hazard.* For single unit tank cars, interior pipes of loading and unloading valves, sampling devices, and gauging devices with an opening for the passage of the lading exceeding 1.52 mm (0.060 inch) diameter must be equipped with excess flow valves. For single unit tank cars constructed before January 1, 1972, gauging devices must conform to this paragraph by no later than July 1, 2006. The protective housing cover must be provided with an opening, with a weatherproof cover, above each safety relief valve that is concentric with the discharge of the safety relief valve and that has an area at least equal to the valve outlet area. Class DOT 109 tank cars and tank cars manufactured from aluminum or nickel plate are not authorized.

(k) *Special requirements for chlorine.* Tank cars built after September 30, 1991, must have an insulation system consisting of 5.08 cm (2 inches) glass fiber placed over 5.08 cm (2 inches) of ceramic fiber. Tank cars must have excess flow valves on the interior pipes of liquid discharge valves. Tank cars constructed to a DOT 105A500W specification may be marked as a DOT 105A300W

specification with the size and type of safety relief valves required by the marked specification.

(l) *Special requirements for hydrogen sulphide.* Each multi-unit tank car must be equipped with adequate safety relief devices of the fusible plug type having a yield temperature not over 76.66 °C (170 °F.), and not less than 69.44 °C (157 °F.). Each device must be resistant to extrusion of the fusible alloy and leak tight at 55 °C (130 °F.). Each valve outlet must be sealed by a threaded solid plug. In addition, all valves must be protected by a metal cover.

(m) *Special requirements for nitrosyl chloride.* Single unit tank cars and their associated service equipment, such as venting, loading and unloading valves, and safety relief valves, must be made of metal or clad with a material that is not subject to rapid deterioration by the lading. Multi-unit tank car tanks must be nickel-clad and have safety relief devices incorporating a fusible plug having a yield temperature of 79.44 °C (175 °F.). Safety relief devices must be vapor tight at 54.44 °C (130 °F.).

(n) *Special requirements for hydrogen.* Each tank car must be equipped with one or more safety relief devices. The discharge outlet for each safety relief device must be connected to a manifold having a non-obstructed discharge area of at least 1.5 times the total discharge area of the safety relief devices connected to the manifold. All manifolds must be connected to a single common header having a non-obstructed discharge pointing upward and extending above the top of the car. The header and the header outlet must each have a non-obstructed discharge area at least equal to the total discharge area of the manifolds connected to the header. The header outlet must be equipped with an ignition device that will instantly ignite any hydrogen discharged through the safety relief device.

(o) *Special requirements for carbon dioxide, refrigerated liquid and nitrous oxide, refrigerated liquid.* Each tank car must have an insulation system so that the thermal conductance is not more than 0.613 kilojoules per hour, per square meter, per degree Celsius (0.03 B.t.u. per square foot per hour, per degree Fahrenheit) temperature differential. Each tank car must be equipped with one safety relief valve set to open at a pressure not exceeding 75 percent of the tank test pressure and one frangible disc design to burst at a pressure less than the tank test pressure. The discharge capacity of each safety relief device must be sufficient to prevent building up of pressure in the tank in excess of 82.5 percent of the test pressure of the tank. Tanks must be equipped with two regulating valves set to open at a pressure not to exceed 24.1 Bar (350 psi) on DOT 105A500W tanks and at a pressure not to exceed 27.6 Bar (400 psi) on DOT 105A600W tanks. Each regulating valve and safety relief device must have its final discharge piped to the outside of the protective housing.

[Amdt. 173–224, 55 FR 52665, Dec. 21, 1990]

EDITORIAL NOTE: For FEDERAL REGISTER citations affecting § 173.314, see the List of CFR Sections Affected appearing in the Finding Aids section of this volume.

§ 173.315 Compressed gases in cargo tanks and portable tanks.

(a) A compressed gas offered for transportation in a cargo tank motor vehicle or a portable tank must be prepared in accordance with this section, §§ 173.32, 173.33 and subpart E of part 180 of this subchapter; for cryogenic liquids, see § 173.318; for marking requirements, see §§ 172.326 and 172.328 of this subchapter. A compressed gas must be loaded and offered for transportation in accordance with the following table:

Kind of gas	Maximum permitted filling density		Specification container required	
	Percent by weight (see Note 1)	Percent by volume (see par. (f) of this section)	Type (see Note 2)	Minimum design pressure (psig)
Ammonia, anhydrous or Ammonia solutions with greater than 50 percent ammonia (see Notes 14 and 17).	56	82, See Note 5	DOT–51, MC–330, MC–331; See Notes 12 and 17.	265; See Note 17.

Kind of gas	Maximum permitted filling density		Specification container required	
	Percent by weight (see Note 1)	Percent by volume (see par. (f) of this section)	Type (see Note 2)	Minimum design pressure (psig)
Ammonia solutions with more than 35 percent but not more than 50 percent ammonia.	See par. (c) of this section.	See Note 7	DOT–51, MC–330, MC–331; see Note 12.	100; See par. (c) of this section.
Bromotrifluoromethane (R–13B1 or H–1301); (See Note 9).	133	See Note 7	DOT–51, MC–330, MC–331.	365.
Butadiene, inhibited	See par. (b) of this section.	See par. (b) of this section.	DOT–51, MC–330, MC–331.	100.
Carbon dioxide, refrigerated liquid	See par. (c)(1) of this section.	95	.....do	200; see Note 3.
Chlorine	125	See Note 7	DOT–51, MC–330, MC–331.	225; See Notes 4 and 8.
Chlorodifluoroethane (R–142b) (1-Chloro 1,1-difluoroethane); (See Note 9).	100	See Note 7	DOT–51, MC–330, MC–331.	100.
Chlorodifluoromethane (R–22); (See Note 9).	105	See Note 7	DOT–51, MC–330, MC–331.	250.
Chloropentafluoroethane (R–115); (See Note 9).	See par. (c) of this section.	See Note 7	DOT–51, MC–330, MC–331.	See par. (c) of this section.
Chlorotrifluoromethane (R–13); (See Note 9).	See par. (c) of this section.	See Note 7	DOT–51, MC–330, MC–331.	See par. (c) of this section.
Dichlorodifluoromethane (R–12); (See Note 9).	119	See Note 7	DOT–51, MC–330, MC–331.	150.
Difluoroethane (R–152a); (See Note 9)	79	See Note 7	DOT–51, MC–330, MC–331.	150.
Dimethyl ether (see Note 16)	59	.....do	.....do	200.
Dimethylamine, anhydrous	59	See Note 7	DOT–51, MC–330, MC–331.	150.
Division 2.1, materials not specifically provided for in this table.	See par. (c) of this section.	See Note 7	DOT–51, MC–330, MC–331.	See Note 18.
Division 2.2, materials not specifically provided for in this table.	See par. (c) of this section.	See Note 7	DOT–51, MC–330, MC–331.	See Note 19.
Division 2.3, Hazard Zone A, materials not specifically provided for in this table.	See par. (c) of this section.	See Note 7	DOT–51, MC–330, MC–331; See Note 23.	See Note 20.
Division 2.3, Hazard Zone B, materials not specifically provided for in this table.	See par. (c) of this section.	See Note 7	DOT–51, MC–330, MC–331; See Note 23.	See Note 20.
Division 2.3, Hazard Zone C, materials not specifically provided for in this table.	See par. (c) of this section.	See Note 7	DOT–51, MC–330, MC–331; See Note 24.	See Note 21.
Division 2.3, Hazard Zone D, materials not specifically provided for in this table.	See par. (c) of this section.	See Note 7	DOT–51, MC–330, MC–331; See Note 25.	See Note 22.
Ethane, refrigerated liquid		See par. (c) of this section.	MC–331, MC–338	100; see Note 11.
Ethane-propane mixture, refrigerated liquid.		See par. (c) of this section.	MC–331, MC–338	275; see Note 11.
Hexafluoropropylene	110	See Note 7	DOT–51, MC–330, MC–331.	250.
Hydrogen chloride, refrigerated liquid	103.0	See Note 7	MC–331, MC–338	100; see Note 11.
	91.6	.....do	.....do	300; see Note 11.
	86.7	.....do	.....do	450; see Note 11.
Liquefied petroleum gas (see Note 15)	See par. (b) of this section.	See par. (b) of this section.	DOT–51, MC–330, MC–331.	See par. (c) of this section.
Methylacetylene-propadiene, stabilized (see Note 13).	53	90	DOT 51, MC 330, MC 331.	200.
Methylamine, anhydrous	60	See Note 7	DOT–51, MC–330, MC–331..	
Methyl chloride	84	88.5	.....do	150.
Methyl chloride (optional portable tank 2,000 pounds water capacity, fusible plug).	.....do	See Note 6	DOT–51	225.
Methyl mercaptan	80	90	DOT–51, MC–330, MC–331; See Note 23.	100.
Nitrous oxide, refrigerated liquid	See par. (c)(1) of this section.	95	DOT–51, MC–330, MC–331.	200; See Note 3.
Refrigerant gas, n.o.s. or Dispersant gas, n.o.s. (See Note 9).	See par. (c) of this section.	See Note 7	DOT–51, MC–330, MC–331.	See par. (c) of this section.

Kind of gas	Maximum permitted filling density		Specification container required	
	Percent by weight (see Note 1)	Percent by volume (see par. (f) of this section)	Type (see Note 2)	Minimum design pressure (psig)
Sulfur dioxide (tanks not over 1,200 gallons water capacity).	125	87.5	DOT–51, MC–330, MC–331; See Note 24.	150; See Note 4.
Sulfur dioxide (tanks over 1,200 gallons water capacity).	125	87.5	DOT–51, MC–330, MC–331; See Note 24.	125; See Note 4.
Sulfur dioxide (optional portable tank 1,000–2,000 pounds water capacity, fusible plug).	125	See Note 6	DOT–51; See Note 24.	225.
Trimethylamine, anhydrous	57	See Note 7	DOT–51, MC–330, MC–331.	150.
Vinyl chloride	84 (see Note 13)	See Note 7	MC–330, MC–331	150.
Vinyl fluoride, inhibited	66	.....do	.....do	250; see Note 11.
Vinyl methyl ether	68	See Notes 7 and 13.	.....do	100.

NOTE 1: Maximum filling density for liquefied gases is hereby defined as the percent ratio of the weight of gas in the tank to the weight of water that the tank will hold. For determining the water capacity of the tank in pounds, the weight of a gallon (231 cubic inches) of water at 60° F. in air shall be 8.32828 pounds.

NOTE 2: See § 173.32 for authority to use other portable tanks and for manifolding cargo tanks, see § 173.301(d). Specifications MC 330 cargo tanks may be painted as specified for MC 331 cargo tanks.

NOTE 3: If cargo tanks and portable tank containers for carbon dioxide, refrigerated liquid and nitrous oxide, refrigerated liquid are designed to conform to the requirements of the ASME Code for Low Temperature Operation, the design pressure may be reduced to 100 p.s.i.g. or the controlled pressure, whichever is greater.

NOTE 4: Material must be steel. Packagings must have a corrosion allowance of 20 percent or 0.10 inch, whichever is less, added to the metal thickness. The minimum wall thickness for chlorine packagings is 0.300 inch for stainless steel or 0.625 inch for carbon steel, including corrosion allowance.

NOTE 5: Unlagged cargo tanks and portable tank containers for liquid anhydrous ammonia may be filled to 87.5 percent by volume provided the temperature of the anhydrous ammonia being loaded into such tanks is determined to be not lower than 30° F. or provided the filling of such tanks is stopped at the first indication of frost or ice formation on the outside surface of the tank and is not resumed until such frost or ice has disappeared.

NOTE 6: Tanks equipped with fusible plugs must be filled by weight.

NOTE 7: Tanks must be filled by weight.

NOTE 8: Chlorine packagings may be shipped only if the contents are to be unloaded at one unloading point.

NOTE 9: This gas may be transported in authorized cargo tanks and portable tanks marked ''DISPERSANT GAS,'' or ''REFRIGERANT GAS.''

NOTE 10: [Reserved]

NOTE 11: MC–330, MC–331 and MC–338 cargo tanks must be insulated. Cargo tanks must meet all the following requirements. Each tank must have a design service temperature of minus 100°F., or no warmer than the boiling point at one atmosphere of the hazardous material to be shipped therein, whichever is colder, and must conform to the low-temperature requirements of the ASME Code. When the normal travel time is 24 hours or less, the tank's holding time as loaded must be at least twice the normal travel time. When the normal travel time exceeds 24 hours, the tank's holding time as loaded must be at least 24 hours greater than the normal travel time. The holding time is the elapsed time from loading until venting occurs under equilibrium conditions. The cargo tank must have an outer jacket made of steel when the cargo tank is used to transport a flammable gas.

NOTE 12: No aluminum, copper, silver, zinc or an alloy of any of these metals shall be used in packaging construction where it comes into contact with the lading.

NOTE 13: All parts of valves and safety devices in contact with contents of tank must be of a metal or other material suitably treated if necessary, which will not cause formation of any acetylides.

NOTE 14: Specifications MC 330 and MC 331 cargo tanks constructed of other than quenched and tempered steel ''(NQT)'' are authorized for all grades of anhydrous ammonia. Specifications MC 330 and MC 331 cargo tanks constructed of quenched and tempered steel ''(QT)'' (see marking requirements of § 172.328(c) of this subchapter) are authorized for anhydrous ammonia having a minimum water content of 0.2 percent by weight. Any tank being placed in anhydrous ammonia service or a tank which has been in other service or has been opened for inspection, test, or repair, must be cleaned of the previous product and must be purged of air before loading. See § 172.203(h) of this subchapter for special shipping paper requirements.

NOTE 15: Specifications MC 330 and MC 331 cargo tanks constructed of other than quenched and tempered steel (NQT) are authorized for all grades of liquefied petroleum gases. Only grades of liquefied petroleum gases determined to be ''noncorrosive'' are authorized in Specification MC 330 and MC 331 cargo tanks constructed of quenched and tempered steel (QT). ''Noncorrosive'' means the corrosiveness of the gas does not exceed the limitations for classification 1 of the ASTM Copper Strip Classifications when tested in accordance with ASTM D1838–64, ''Copper Strip Corrosion by Liquefied Petroleum (LP) Gases.'' (For (QT) and (NQT) marking requirements see § 172.328(c) of this subchapter. For special shipping paper requirements, see § 172.203(h) of this subchapter.)

NOTE 16: Specifications MC 330 and MC 331 cargo tanks must be equipped with emergency discharge controls that conform to § 178.337–11(c) of this subchapter.

NOTE 17: A Specification MC-330 or MC-331 cargo tank or a nonspecification cargo tank meeting, and marked in conformance with, the edition of the ASME Code in effect when it was fabricated, may be used for the transportation of anhydrous ammonia if it:

(1) Has a minimum design pressure not lower than 250 psig;

(2) Was manufactured in conformance with the ASME Code prior to January 1, 1981, according to its ASME name plate and manufacturer's data report;

(3) Is painted white or aluminum;

(4) Complies with Note 12 of this paragraph;

(5) Has been inspected and tested in accordance with subpart E of part 180 of this subchapter as specified for MC 331 cargo tanks.

(6) Was used to transport anhydrous ammonia prior to January 1, 1981;

(7) Is operated exclusively in intrastate commerce (including its operation by a motor carrier otherwise engaged in interstate commerce) in a state where its operation was permitted by the laws of that State (not including the incorporation of this subchapter) prior to January 1, 1981; and

(8) Is operated in conformance with all other requirements of this subchapter.

NOTE 18: The minimum packaging design pressure must not be less than the vapor pressure at the reference temperature of the lading plus one percent or 173.4 kPa (25 psig), whichever is less.

NOTE 19: The minimum packaging design pressure must not be less than the vapor pressure at the reference temperature of the lading.

NOTE 20: The minimum packaging design pressure must not be less than 1.5 times the vapor pressure of the lading at 46°C (115°F).

NOTE 21: The minimum packaging design pressure must not be less than 1.3 times the vapor pressure of the lading at 46°C (115°F).

NOTE 22: The minimum packaging design pressure must not be less than 1.1 times the vapor pressure of the lading at 46°C (115°F).

NOTE 23: Packagings must be made of stainless steel except that steel other than stainless steel may be used in accordance with the provisions of § 173.24b(b) of this part. Thickness of stainless steel for shell and heads must be the greater of 7.62 mm (0.300 inch) or the thickness required for the packaging at its minimum design pressure.

NOTE 24: Packagings must be made of stainless steel except that steel other than stainless steel may be used in accordance with the provisions of § 173.24b(b) of this part. Thickness of stainless steel for shell and heads must be the greater of 6.35 mm (0.250 inch) or the thickness required for the packaging at its minimum design pressure. For sulphur dioxide, this Note does not apply until October 1, 1994.

NOTE 25: Packagings must be made of stainless steel except that steel other than stainless steel may be used in accordance with the provisions of § 173.24b(b) of this part. Thickness for shell and heads must be as calculated for the packaging at its minimum design pressure.

(b) Maximum permitted filling densities for cargo and portable tank containers for transportation of butadiene, inhibited, and liquefied petroleum gas are as follows:

Maximum specific gravity of the liquid material at 60° F.	Maximum permitted filling density in percent of the water-weight capacity of the tanks (percent) See Note 1	
	1200 gallons or less	Over 1200 gallons
0.473 to 0.480	38	41
0.481 to 0.488	39	42
0.489 to 0.495	40	43
0.496 to 0.503	41	44
0.504 to 0.510	42	45
0.511 to 0.519	43	46
0.520 to 0.527	44	47
0.528 to 0.536	45	48
0.537 to 0.544	46	49
0.545 to 0.552	47	50
0.553 to 0.560	48	51
0.561 to 0.568	49	52
0.569 to 0.576	50	53
0.577 to 0.584	51	54
0.585 to 0.592	52	55
0.593 to 0.600	53	56
0.601 to 0.608	54	57
0.609 to 0.617	55	58
0.618 to 0.626	56	59
0.627 and over	57	60

NOTE 1: Filling is permitted by volume provided the same filling density is used as permitted by weight, except when using fixed length dip tube or other fixed maximum liquid level indicators (paragraph (f) of this section), in which case the maximum permitted filling density shall not exceed 97 percent of the maximum permitted filling density by weight contained in the table.

(1) *Odorization*. All liquefied petroleum gas shall be effectively odorized as required in Note 2 of this paragraph to indicate positively, by a distinctive odor, the presence of gas down to a concentration in air of not over one-fifth the lower limit of combustibility: *Provided, however,* That odorization is not required if harmful in the use or further processing of the liquefied petroleum gas, or if odorization will serve no useful purpose as a warning agent in such use or further processing.

NOTE 1: The lower limits of combustibility of the more commonly used liquefied petroleum gases are: Propane, 2.15 percent; butane, 1.55 percent. These figures represent volumetric percentages of gas-air mixtures in each case.

NOTE 2: The use of 1.0 pound of ethyl mercaptan, 1.0 pound of thiophane, or 1.4 pounds of amyl mercaptan per 10,000 gallons of liquefied petroleum gas shall be considered sufficient to meet the requirements of § 173.315(b)(1). This note does not exclude the use of any other odorant in sufficient quantity to meet the requirements of § 173.315(b)(1).

(c) Except as otherwise provided, the loading of a liquefied gas into a cargo tank or portable tank shall be determined by weight or by a suitable liquid level gauging device. The vapor pressure (psig) at 115° F. must not exceed the design pressure of the cargo tank or portable tank container. The outage and filling limits for liquefied gases must be as prescribed in § 173.24b of this part, except that this requirement does not apply to:

(1) A tank containing carbon dioxide, refrigerated liquid or nitrous oxide, refrigerated liquid. Such tank is required to be equipped with suitable pressure control valves and may not be filled to a level exceeding 95 percent of the volumetric capacity of the tank.

(2) A tank containing ethane, refrigerated liquid; ethane-propane mixture, refrigerated liquid; or hydrogen chloride, refrigerated liquid. Such tank must be filled to allow at least two percent outage below the inlet of the pressure relief valve or pressure control valve under conditions of incipient

opening, with the tank in a level attitude.

(d) If the loading of cargo tanks and portable tank containers with liquefied gases is to be determined by weight, the gross weight shall be checked after the filling line is disconnected in each instance. The gross weight shall be calculated from the tank capacity and tare weight set forth on the metal plate required by the specification, and the maximum filling density permitted for the material being loaded into the tank as set forth in the table, paragraph (a) of this section.

(e) If the loading of cargo tanks and portable tank containers with liquefied gases is to be determined by adjustable liquid level device, each tank and each compartment thereof shall have a thermometer well, so that the internal liquid temperature can easily be determined, and the amount of liquid in the tank shall be corrected to a 60° F. basis. Liquid levels shall not exceed a level corresponding to the maximum filling density permitted for the material being loaded into the tank as set forth in the table in paragraph (a) of this section.

(f) When the loading of cargo tanks and portable tank containers with liquefied gases is determined only by fixed length dip tube or other fixed maximum liquid level indicator, the device shall be arranged to function at a level not to exceed the maximum permitted volume prescribed by the table, paragraph (a)(1) of this section. Loading shall be stopped when the device functions.

(g) Containers, the liquid level of which has been determined by means of a fixed length dip tube gauging device, shall not be acceptable for stowage as cargo on vessels in commerce subject to the jurisdiction of the United States Coast Guard. Nothing contained in this section shall be so construed as to prohibit the transportation on car floats or car ferries of motor vehicles laden with containers nor cargo tanks the liquid level of either of which has been determined by means of fixed length dip tube devices.

(h) Each cargo tank and portable tank, except a tank filled by weight, must be equipped with one or more of the gauging devices described in the following table which indicate accurately the maximum permitted liquid level. Additional gauging devices may be installed but may not be used as primary controls for filling of cargo tanks and portable tanks. Gauge glasses are not permitted on any cargo tank or portable tank. Primary gauging devices used on cargo tanks of less than 3500 gallons water capacity are exempt from the longitudinal location requirements specified in paragraphs (h)(2) and (3) of this section provided: The tank length does not exceed three times the tank diameter; and the cargo tank is unloaded within 24 hours after each filling of the tank.

Kind of gas	Gaging device permitted for filling purposes
Anhydrous ammonia	Rotary tube; adjustable slip tube; fixed length dip tube.
Anhydrous dimethylamine	None.
Anhydrous monomethylamine	Do.
Anhydrous trimethylamine	Do.
Aqua ammonia solution containing anhydrous ammonia.	Rotary tube; adjustable slip tube; fixed length dip tube.
Butadiene, inhibited	Do.
Carbon dioxide, refrigerated liquid	Do.
Chlorine	None.
Dichlorodifluoromethane	Do.
Difluoroethane	Do.
Difluoromonochloroethane	Do.
Dimethyl ether	Do.
Ethane, refrigerated liquid	Rotary tube; adjustable slip tube; fixed length dip tube.
Ethane-propane mixture, refrigerated liquid.	Do.
Hexafluoropropylene	None.
Hydrogen chloride, refrigerated liquid.	Do.
Liquefied petroleum gases	Rotary tube; adjustable slip tube; fixed length dip tube.
Methyl chloride	Fixed length dip tube.
Methyl mercaptan	Rotary tube; adjustable slip tube; fixed length dip tube.
Monochlorodifluoromethane	None.
Nitrous oxide, refrigerated liquid	Rotary tube; adjustable slip tube; fixed length dip tube.
Methylacetylenepropadiene, stabilized.	Do.
Refrigerant gas, n.o.s. or Dispersant gas, n.o.s.	None.
Sulfur dioxide	Fixed length dip tube.
Vinyl chloride	None.
Vinyl fluoride, inhibited	Do.

(1) The design pressure of the liquid level gauging devices shall be at least equal to the design pressure of the tank.

(2) If the primary gauging device is adjustable, it must be capable of adjustment so that the end of the tube will be in the location specified in paragraph (h)(3) of this section for at least one of the ladings to be transported, at the filling level corresponding to an average loading temperature. Exterior means must be provided to indicate this adjustment. The gauging device must be legibly and permanently marked in increments not exceeding 20 Fahrenheit degrees (or not exceeding 25 p.s.i.g. on tanks for carbon dioxide, refrigerated liquid or nitrous oxide, refrigerated liquid), to indicate the maximum levels to which the tank may be filled with liquid at temperatures above 20° F. However, if it is not practicable to so mark the gauging device, this information must be legibly and permanently marked on a plate affixed to the tank adjacent to the gauging device.

(3) A dip tube gauging device consists of a pipe or tube with a valve at its outer end with its intake limited by an orifice not larger than 0.060 inch in diameter. If a fixed length dip tube is used, the intake must be located midway of the tank both longitudinally and laterally and at maximum permitted filling level. In tanks for liquefied petroleum gases, the intake must be located at the level reached by the lading when the tank is loaded to maximum filling density at 40° F.

(4) Except on a tank used exclusively for the transportation of carbon dioxide, refrigerated liquid or nitrous oxide, refrigerated liquid, each opening for a pressure gauge must be restricted at or inside the tank by an orifice no larger than 0.060 inch in diameter. For carbon dioxide, refrigerated liquid or nitrous oxide, refrigerated liquid service, the pressure gauge need only be used during the filling operation.

(i) Each tank must be provided with one or more safety relief devices which, unless otherwise specified in this part, must be safety relief valves of the spring-loaded type. Each valve must be arranged to discharge upward and unobstructed to the outside of the protective housing to prevent any impingement of escaping gas upon the tank. For each chlorine tank the protective housing must be in compliance with the requirements set forth in the applicable specification.

(1) The safety relief valves on each tank must meet the following conditions:

(i) The total relieving capacity, as determined by the flow formulas contained in Section 5 of CGA Pamphlet S–1.2, must be sufficient to prevent a maximum pressure in the tank of more than 120 percent of the design pressure;

(ii) The flow capacity rating, testing and marking must be in accordance with Sections 5, 6 and 7 of CGA Pamphlet S–1.2.

(iii) For an insulated tank, the required relieving capacity of the relief valves must be the same as for an uninsulated tank, unless the insulation will remain in place and will be effective under fire conditions. In this case, each insulated tank must be covered by a sheet metal jacket of not less than 16 gauge thickness.

(iv) An MC 330 cargo tank that has relief valves sized by Fetterly's formula dated November 27, 1928, may be continued in service. Copies of this formula may be obtained from the Bureau of Explosives.

(2) Each safety relief valve must be arranged to minimize the possibility of tampering. If the pressure setting or adjustment is external to the valve, the safety relief valve must be provided with means for sealing the adjustment and it must be sealed.

(3) Each safety relief valve on a tank must be set to start-to-discharge at pressure no higher than 110 percent of the tank design pressure and no lower than the design pressure specified in paragraph (a) of this section for the gas transported.

(4) Each safety relief valve must be plainly and permanently marked with the pressure in p.s.i.g. at which it is set to discharge, with the actual rate of discharge of the device in cubic feet per minute of the gas or of air at 60° F. and 14.7 p.s.i.a., and with the manufacturer's name or trade name and catalog number. The start-to-discharge valve must be visible after the valve is installed. The rated discharge capacity of the device must be determined at a pressure of 120 percent of the design pressure of the tank.

(5) Each safety relief valve must have direct communication with the vapor space in the tank.

(6) Each connection to a safety relief valve must be of sufficient size to provide the required rate of discharge through the safety relief valve.

(7) No shut-off valve may be installed between a safety relief valve and the tank except in cases where two or more safety relief valves are installed on the same tank, and one or more safety shut-off valves are arranged to always provide the required relief capacity through at least one of the safety relief valves.

(8) Each safety relief valve outlet must be provided with a protective device to prevent the entrance and accumulation of dirt and water. This device must not impede flow through the valve.

(9) On tanks for carbon dioxide, refrigerated liquid or nitrous oxide, refrigerated liquid each safety relief device must be installed and located so that the cooling effect of the contents will not prevent the effective operation of the device. In addition to the required safety relief valves, these tanks may be equipped with one or more pressure controlling devices.

(10) Each tank for carbon dioxide, refrigerated liquid also may be equipped with one or more frangible disc devices set to function at a pressure not over two times nor less than 1.5 times the design pressure of the tank.

(11) Each portion of connected liquid piping or hose that can be closed at both ends must be provided with a safety relief valve without an intervening shut-off valve to prevent excessive hydrostatic pressure that could burst the piping or hose.

(12) Subject to conditions of paragraph (a) of this section for the methyl chloride and sulfur dioxide optional portable tanks, one or more fusible plugs examined by the Bureau of Explosives and approved by the Associate Administrator for Hazardous Materials Safety may be used on these tanks in place of safety relief valves of the spring-loaded type. The fusible plug or plugs must be in accordance with CGA Pamphlet S–1.2, to prevent a pressure rise in the tank of more than 120 percent of the design pressure. If the tank is over 30 inches long, each end must have the total specified safety discharge area.

(13) A safety relief valve on a chlorine cargo tanks must conform to one of the following standards of The Chlorine Institute, Inc.: Type 1½ JQ225, Dwg. H51970, dated October 7, 1968; or Type 1½ JQ225, Dwg. H50155, Revision A, dated April 28, 1969.

(j) Storage containers for liquefied petroleum gas for permanent installation on consumer premises may be shipped by private motor carrier only under the following conditions:

(1) Each container must be constructed in compliance with the requirements of the ASME Code (containers built in compliance with earlier editions starting with 1943 are authorized) and must be marked to indicate compliance in the manner specified by the respective Code.

(2) Each container must be equipped with safety devices in compliance with the requirements for safety devices on containers as specified in NFPA Pamphlet No. 58.

(3) The containers shall be so braced or otherwise secured on the vehicle as to prevent relative motion while in transit. Valves or other fittings shall be adequately protected against injury during transportation. (See § 177.834(g) of this subchapter.)

(4) Except as provided in paragraph (j)(5) of this section, containers shall not be shipped when charged with liquefied petroleum gas to more than 5 percent of their water capacity.

(5) Storage containers of less than 1,042 pounds water capacity (125 gallons) may be shipped when charged with liquefied petroleum gas in compliance with DOT filling density.

(k) A nonspecification cargo tank meeting, and marked in conformance with, the edition of the ASME Code in effect when it was fabricated, may be used for the transportation of liquefied petroleum gas if it:

(1) Has a minimum design pressure no lower than 250 psig;

(2) Has a capacity of 3,500 gallons or less;

(3) Was manufactured in conformance with the ASME Code prior to January 1, 1981, according to its ASME name plate and manufacturer's data report;

(4) Conforms to NFPA Pamphlet 58;

(5) Has been inspected and tested in accordance with subpart E of part 180 of this subchapter as specified for MC 331 cargo tanks;

(6) Is operated exclusively in intrastate commerce (including its operation by a motor carrier otherwise engaged in interstate commerce) in a state where its operation was permitted by the laws of that State (not including the incorporation of this subchapter) prior to January 1, 1981;

(7) Was used to transport liquefied petroleum gas prior to January 1, 1981; and

(8) Is operated in conformance with all other requirements of this subchapter.

(l) Anhydrous ammonia must not be offered for transportation or transported in specification MC 330 and MC 331 cargo tanks constructed of quenched and tempered (''QT'') steel except as provided in this paragraph.

(1) The ammonia must have a minimum water content of 0.2 percent by weight. Any addition of water must be made using steam condensate, deionized, or distilled water.

(2) Except as otherwise provided in this paragraph, each person offering for transportation or transporting anhydrous ammonia shall perform a periodic analysis for prescribed water content in the ammonia. The analysis must be performed:

(i) From a sample of the ammonia in storage taken at least once every 7 days, or each time ammonia is added to the storage tanks, whichever is less frequent; or

(ii) At the time the cargo tanks are loaded, then a sample of the ammonia taken from at least one loaded cargo tank out of each 10 loads, or from one cargo tank every 24 hours, whichever is less frequent; or

(iii) At the same frequency as described in paragraph (l)(2)(ii) of this section, from a sample taken from the loading line to the cargo tank.

(3) If water is added at the time of loading:

(i) The sample for analysis must be taken from a point in the loading line between the water injection equipment and the cargo tank; and

(ii) Positive provisions must be made to assure water injection equipment is operating.

(4) If water injection equipment becomes inoperative, suitable corrective maintenance must be performed after which a sample from the first loaded cargo tank must be analyzed for prescribed water content.

(5) The analysis method for water content must be as prescribed in CGA Pamphlet G–2.2, titled ''Tentative Standard Method for Determining Minimum of 0.2 per cent water in Anhydrous Ammonia,'' 1975 edition.

(6) Records indicating the results of the analysis taken, as required by this paragraph, must be retained for 2 years and must be open to inspection by representative of the Department.

(7) Each person receiving anhydrous ammonia containing 0.2 per cent water by weight may offer for transportation or transport that ammonia without performing the prescribed analysis for water content provided:

(i) The ammonia received was certified as containing 0.2 percent water as prescribed in §§172.203(h)(l)(i) and 177.817(a) of this subchapter; and

(ii) The amount of water in the ammonia has not been reduced by any means.

(m) A cargo tank (commonly known as a nurse tank and considered an implement of husbandry) transporting anhydrous ammonia, and operated by a private carrier exclusively for agricultural purposes does not have to meet the specification requirements of part 178 of this subchapter if it:

(1) Has a minimum design pressure of 250 psig and meets the requirements of the edition of the ASME code in effect at the time it was manufactured and is marked accordingly;

(2) Is equipped with safety relief valves meeting the requirements of CGA pamphlet S1.2;

(3) Is painted white or aluminum;

(4) Has capacity of 3,000 gallons or less;

(5) Is loaded to a filling density no greater than 56 percent;

(6) Is securely mounted on a farm wagon; and

(7) Is in conformance with the requirements of part 172 of this subchapter except that shipping papers are

not required; and it need not be marked or placarded on one end if that end contains valves, fittings, regulators or gauges when those appurtenances prevent the markings and placard from being properly placed and visible.

(n) Each MC 330 and MC 331 cargo tank used to transport a flammable gas, anhydrous ammonia or hydrogen chloride, refrigerated liquid must have each liquid opening equipped in accordance with §178.337–11 of this subchapter.

(o) *Chlorine cargo tanks.* Each cargo tank motor vehicle used for the transportation of chlorine must meet the requirements in the following:

(1) Any hose, piping, or tubing used for loading or unloading that is mounted or carried on the motor vehicle may not be attached to any valve and must be capped at all ends to prevent the entry of moisture, except at the time of loading or unloading. Except at the time of loading and unloading, the pipe connection of each angle valve must be closed with a screw plug which is chained or otherwise fastened to prevent misplacement.

(2) Each chlorine cargo tank angle valve must be tested to be leak free at not less than 225 psig using dry air or inert gas before installation and thereafter every 2 years when performing the required periodic retest in §180.407(c) of this subchapter. Prior to each loading, the cargo tank must be inspected and the angle valves and gasketed joints must be examined and tested at a pressure of not less than 50 psig to determine that they are not leaking and are in proper condition for transportation. Any leaks must be corrected before the cargo tank is offered for transportation.

(3) Excess flow valves on the cargo tank must meet the requirements in §178.337–11(a)(4) of this subchapter.

[29 FR 18743, Dec. 29, 1964. Redesignated at 32 FR 5606, Apr. 5, 1967]

EDITORIAL NOTE: For FEDERAL REGISTER citations affecting §173.315, see the List of CFR Sections Affected appearing in the Finding Aids section of this volume.

§ 173.316 Cryogenic liquids in cylinders.

(a) *General requirements.* (1) A cylinder may not be loaded with a cryogenic liquid colder than the design service temperature of the packaging.

(2) A cylinder may not be loaded with any material which may combine chemically with any residue in the packaging to produce an unsafe condition.

(3) The jacket covering the insulation on a cylinder used to transport any flammable cryogenic liquid must be made of steel.

(4) A valve or fitting made of aluminum with internal rubbing or abrading aluminum parts that may come in contact with oxygen in the cryogenic liquid form may not be installed on any cylinder used to transport oxygen, cryogenic liquid unless the parts are anodized in accordance with ASTM Standard B 580.

(5) An aluminum valve, pipe or fitting may not be installed on any cylinder used to transport any flammable cryogenic liquid.

(6) Each cylinder must be provided with one or more pressure relief devices, which must be installed and maintained in compliance with the requirements of this subchapter.

(7) Each pressure relief device must be installed and located so that the cooling effect of the contents during venting will not prevent effective operation of the device.

(8) The maximum weight of the contents in a cylinder with a design service temperature colder than −320° F. may not exceed the design weight marked on the cylinder (see §178.35 of this subchapter).

(b) *Pressure control systems.* Each cylinder containing a cryogenic liquid must have a pressure control system that conforms to §173.34(d) and is designed and installed so that it will prevent the cylinder from becoming liquid full.

(c) *Specification cylinder requirements and filling limits.* Specification DOT–4L cylinders (§178.57 of this subchapter) are authorized for the transportation of cryogenic liquids when carried in the vertical position as follows:

(1) For purposes of this section, ''filling density,'' except for hydrogen, is

defined as the percent ratio of the weight of lading in the packaging to the weight of water that the packaging will hold at 60° F. (1 lb. of water=27.737 cubic inches at 60° F.).

(2) The cryogenic liquids of argon, nitrogen, oxygen, helium and neon must be loaded and shipped in accordance with the following table:

Pressure control valve setting (maximum start-to-discharge pressure psig)	Maximum permitted filling density (percent by weight)					
	Air	Argon	Nitrogen	Oxygen	Helium	Neon
45	82.5	133	76	108	12.5	109
75	80.3	130	74	105	12.5	104
105	78.4	127	72	103	12.5	100
170	76.2	122	70	100	12.5	92
230	75.1	119	69	98	12.5	85
295	73.3	115	68	96	12.5	77
360	70.7	113	65	93	12.5	.....
450	65.9	111	61	91	12.5	.....
540	62.9	107	58	88	12.5	.....
625	60.1	104	55	86	12.5	.....
Design service temperature (° F.)	−320	−320	−320	−320	−452	−411

(3) *Hydrogen (minimum 95 percent parahydrogen)* must be loaded and shipped as follows:

Column 1	Column 2
Design service temperature	Minus 423° F. or colder.
Maximum permitted filling density, based on cylinder capacity at minus 423° F (see Note 1).	6.7 percent.
The pressure control valve must be designed and set to limit the pressure in the cylinder to not more than.	17 psig.

NOTE 1: The filling density for hydrogen, cryogenic liquid is defined as the percent ratio of the weight of lading in a packaging to the weight of water that the packaging will hold at minus 423° F. The volume of the packaging at minus 423° F is determined in cubic inches. The volume is converted to pounds of water (1 lb. of water=27.737 cubic inches).

(i) Each cylinder must be constructed, insulated and maintained so that during transportation the total rate of venting shall not exceed 30 SCF of hydrogen per hour.

(ii) In addition to the marking requirements in §178.35 of this subchapter, the total rate of venting in SCF per hour (SCFH) shall be marked on the top head or valve protection band in letters at least one-half inch high as follows: ''VENT RATE**SCFH'' (with the asterisks replaced by the number representing the total rate of venting, in SCF per hour).

(iii) Carriage by highway is subject to the conditions specified in §177.840(a) of this subchapter.

(d) *Mixtures of cryogenic liquid.* Where charging requirements are not specifically prescribed in paragraph (c) of this section, the cryogenic liquid must be shipped in packagings and under conditions approved by the Associate Administrator for Hazardous Materials Safety.

[Amdt. 173–166, 48 FR 27695, June 16, 1983, as amended by Amdt. 173–166, 49 FR 24314, June 12, 1984; Amdt. 173–180, 49 FR 42735, Oct. 24, 1984; Amdt. 173–201, 52 FR 13041, Apr. 20, 1987: Amdt. 173–250, 61 FR 25942, May 23, 1996; Amdt. 173–261, 62 FR 24741, May 6, 1997]

§173.318 Cryogenic liquids in cargo tanks.

(a) *General requirements.* (1) A cargo tank may not be loaded with a cryogenic liquid colder than the design service temperature of the packaging.

(2) A cargo tank may not be loaded with any material that may combine chemically with any residue in the packaging to produce an unsafe condition (see §178.338–15).

(3) The jacket covering the insulation on a tank used to transport a cryogenic liquid must be made of steel if the cryogenic liquid:

(i) Is to be transported by vessel (see §176.76(h)(1) of this subchapter); or

(ii) Is oxygen or a flammable material.

(4) A valve or fitting made of aluminum with internal rubbing or abrading aluminum parts that may come in contact with oxygen in the cryogenic liquid form may not be installed on

any cargo tank used to transport oxygen, cryogenic liquid unless the parts are anodized in accordance with ASTM Standard B 580.

(5) An aluminum valve, pipe or fitting, external to the jacket that retains lading during transportation may not be installed on any cargo tank used to transport oxygen, cryogenic liquid or any flammable cryogenic liquid.

(6) A cargo tank used to transport oxygen, cryogenic liquid must be provided with a manhole (see § 178.338–6 of this subchapter).

(b) *Pressure relief systems and pressure control valves*—(1) *Types of pressure relief systems*—(i) *Tanks in oxygen and flammable cryogenic liquid service.* Except as otherwise provided in this paragraph, each tank in oxygen and flammable cryogenic liquid service must be protected by two independent pressure relief systems which are not connected in series, namely:

(A) A primary system of one or more pressure relief valves; and

(B) A secondary system of one of more frangible discs or pressure relief valves. For a tank in carbon monoxide service, the secondary system must be pressure relief valves only.

(ii) *Tanks in helium and atmospheric gas (except oxygen) cryogenic liquid service.* For a tank used in helium and atmospheric gas (except oxygen) cryogenic liquid service, the tank must be protected by at least one pressure relief system consisting of:

(A) One or more pressure relief valves; or

(B) A combination of one or more pressure relief valves and one or more frangible discs.

(2) *Capacities of pressure relief systems*—(i) *Tanks in oxygen or flammable cryogenic liquid service.* For tanks in oxygen or flammable cryogenic liquid service, the primary system and the secondary system of pressure relief devices must each have a flow capacity equal to or greater than that calculated by the applicable formula in paragraph 5.3.2 or paragraph 5.3.3 of CGA Pamphlet S–1.2. In addition:

(A) The primary pressure relief system must have a total flow capacity at a pressure not exceeding 120 percent of the tank's design pressure.

(B) The secondary pressure relief system must have a total flow capacity at a pressure not exceeding 150 percent of the tank's design pressure.

(C) The flow capacity and rating must be verified and marked by the manufacturer of the device in accordance with CGA Pamphlet S–1.2.

(ii) *Tanks in helium and atmospheric gas (except oxygen) cryogenic liquid service.* For tanks in helium and atmospheric gas (except oxygen) cryogenic liquid service, the pressure relief system must have a flow capacity equal to or greater than that calculated by the applicable formula in paragraphs 5.3.2 or 5.3.3 of CGA Pamphlet S–1.2. If the pressure relief system consists of a combination of pressure relief valves and frangible discs, the pressure relief valves must have a total venting capacity equal to or greater than that calculated by the applicable formula in paragraph 4.1.10.1.1 of CGA Pamphlet S–1.2. The pressure relief system must have this total flow capacity at a pressure not exceeding 150 percent of the tank's design pressure. The flow capacity and rating must be verified and marked by the manufacturer of the device in accordance with CGA Pamphlet S–1.2.

(3) *Type and construction of pressure relief devices.* (i) Each pressure relief device must be designed and constructed for a pressure equal to or exceeding the tank's design pressure at the coldest temperature reasonably expected to be encountered.

(ii) Pressure relief devices must be either spring-loaded pressure relief valves or frangible discs. Pressure relief valves must be of a type that automatically open and close at predetermined pressures.

(4) *Setting of pressure relief devices.* (i) On a tank used in oxygen or flammable cryogenic liquid service, the pressure relief devices must perform as follows.

(A) Each pressure relief valve in the primary relief system must be set-to-discharge at a pressure no higher than 110 percent of the tank's design pressure.

(B) Each pressure relief device in the secondary pressure relief system must be designed to commence functioning at a pressure no lower than 130 percent

and no higher than 150 percent of the tank's design pressure.

(ii) On a tank used in helium and atmospheric gas (except oxygen) cryogenic liquid service, the pressure relief devices in the pressure relief system must be designed to commence functioning at no higher than 150 percent of the tank's design pressure.

(5) *Optional pressure relief devices and pressure control valves.* In addition to the required pressure relief devices, a cargo tank in cryogenic liquid (except carbon monoxide) service may be equipped with one or both of the following:

(i) One or more pressure control valves set at a pressure below the tank's design pressure.

(ii) One or more frangible discs set to function at a pressure not less than one and one-half times or more than two times the tank's design pressure.

(6) *Maximum filling rate.* (i) For a tank used in oxygen and flammable cryogenic liquid service, the maximum rate at which the tank is filled must not exceed the liquid flow capacity of the primary pressure relief system rated at a pressure not exceeding 120 percent of the tank's design pressure.

(ii) On a tank used in helium and atmospheric gas (except oxygen) cryogenic liquid service, the maximum rate at which the tank is filled must not exceed the liquid flow capacity of the pressure relief valves rated at 150 percent of the tank's design pressure.

(7) *Arrangement and location of pressure relief devices.* (i) The discharge from any pressure relief system must be directed upward and be unobstructed to the outside of the protective housing in such a manner as to prevent impingement of gas upon the jacket or any structural part of the vehicle.

(ii) Each pressure relief valve must be arranged or protected to prevent the accumulation of foreign material between the relief valve and the atmospheric discharge opening in any relief piping. The arrangement must not impede flow through the device.

(iii) Each pressure relief valve must be designed and located to minimize the possibility of tampering. If the pressure setting or adjustment is external to the valve, the valve adjustment must be sealed.

(iv) Each pressure relief device must have direct communication with the vapor space of the tank at the midlength of the top centerline.

(v) Each pressure relief device must be installed and located so that the cooling effect of the contents during venting will not prevent the effective operation of the device.

(8) *Connections.* (i) Each connection to a pressure relief device must be of sufficient size to allow the required rate of discharge through the pressure relief device. The inlet connection must be not less than one-half inch nominal pipe size.

(ii) A shut-off valve may be installed in a pressure relief system only when the required relief capacity is provided at all times.

(9) *Pressure relief devices for piping hose and vacuum-insulated jackets.* (i) Each portion of connected liquid piping or hose that can be closed at both ends must be provided with either a hydrostatic pressure relief valve without an intervening shut-off valve, or a check valve permitting flow from the pipe or hose into the tank. If used, the relief valve must be located so as to prevent its discharge from impinging on the tank, piping, or operating personnel.

(ii) On a vacuum-insulated cargo tank the jacket must be protected by a suitable relief device to release internal pressure. The discharge area of this device must be at least 0.00024 square inch per pound of water capacity of the tank. This relief device must function at a pressure not exceeding the internal design pressure of the jacket, calculated in accordance with the ASME Code, or 25 psig, whichever is less.

(10) *Tank inlet, outlet, pressure relief device and pressure control valve markings.* (i) Each tank inlet and outlet, except pressure relief devices and pressure control valves, must be permanently marked to indicate whether it communicates with ''vapor'' or ''liquid'' when the tank is filled to the maximum permitted filling density.

(ii) Each pressure relief valve must be plainly and permanently marked with the pressure, in psig, at which it is set-to-discharge, the discharge rate of the device in SCF per minute

(SCFM) of free air, and the manufacturer's name or trade name and catalog number. The marked set-to-discharge pressure valve must be visible with the valve in its installed position. The rated discharge capacity of the device must be determined at a pressure of 120 percent of the design pressure of the tank.

(iii) Each pressure control valve must be plainly and permanently marked with the pressure, in psig, at which it is set-to-discharge.

(c) *Weight of lading requirements.* The weight of a cryogenic liquid in the tank must be determined by weighing or by the use of a liquid level gauging device authorized in § 178.338–14(a) of this subchapter, and may not exceed the lesser of:

(1) The weight of lading in the tank, based on the water capacity stamped on the nameplate (§ 178.338–18(a)(4) of this subchapter) and the appropriate maximum permitted filling density specified in paragraph (f) of this section; or

(2) The maximum weight of lading for which the cargo tank was designed, as marked on the specification plate (see § 178.338–18(b) of this subchapter).

(d) *Outage.* Except for a cargo tank containing helium, cryogenic liquid, a cargo tank offered for transportation must have an outage of at least two percent below the inlet of the pressure relief device or pressure control valve, under conditions of incipient opening, with the tank in a level attitude.

(e) *Temperature.* A flammable cryogenic liquid in a cargo tank at the start of travel must be at a temperature sufficiently cold that the pressure setting of the pressure control valve or the required pressure relief valve, whichever is lower, will not be reached in less time than the marked rated holding time for the cryogenic liquid (see paragraph (g)(3) of this section and § 178.338–9(b) of this subchapter).

(f) *Specification MC–338 (§ 178.338 of this subchapter) cargo tanks* are authorized for the shipment of the following cryogenic liquids subject to the following additional requirements:

(1) For purposes of this section, ''filling density'' is defined as the percent ratio of the weight of lading in the tank to the weight of water that the tank will hold at the design service temperature (one pound of water=27.737 cubic inches at 60° F., or one gallon of water=231 cubic inches at 60° F. and weighs 8.32828 pounds).

(2) *Air, argon, helium, nitrogen, and oxygen, cryogenic liquids* must be loaded and shipped in accordance with the following table:

PRESSURE CONTROL VALVE SETTING OR RELIEF VALVE SETTING

Maximum set-to-discharge pressure (psig)	Maximum permitted filling density (percent by weight)				
	Air	Argon	Helium	Nitrogen	Oxygen
26			12.5		
30	80.3	129	12.5	74	105
40	79.2		12.5		
50	78.0		12.5		
55	77.3	125	12.5	71	102
60	76.9		12.5		
80	75.3		12.5		
85	75.1	121	12.5		99
100	73.0		12.5		
105	73.7		12.5	67	
120	72.2		12.5		
140	71.4		12.5		
145	70.9	115	12.5	64	94
180	68.3		12.5		
200	67.3	110	12.5	61	91
250	63.3	106	12.5	57	87
275	62.3	105	12.5	56	86
325	59.4	101		53	83
Design service temperature.	−320° F	−320° F	−452° F	−320° F	−320° F

(3) *Carbon monoxide, hydrogen (minimum 95 percent para-hydrogen), ethylene, and methane or natural gas, cryogenic liquids* must be loaded and shipped in accordance with the following table:

PRESSURE CONTROL VALVE SETTING OR RELIEF VALVE SETTING

Maximum set-to-discharge pressure (psig)	Maximum permitted filling density (percent by weight)			
	Carbon monoxide	Ethylene	Hydrogen	Methane or natural gas
13			6.6	
15	75.0		6.6	40.5
17	74.0		6.6	
20		53.5		40.0
25	73.0			
30	72.0	52.7	6.3	39.1
35				
40		52.0		38.6
45	71.5			
50		51.4	6.0	38.2
55				
60		50.8		
70		50.2	5.7	37.5
90		49.2		
95				
100		48.4	5.4	36.6
115		48.2		
125			5.0	
150			4.5	
175	62.5	45.8		
285	56.0			
Design service temperature.	−320° F	−155° F	−423° F	−260° F

(4) *Mixtures of cryogenic liquid.* Where charging requirements are not specifically prescribed in this paragraph (f), the cryogenic liquid must be shipped in packagings and under conditions approved by the Associate Administrator for Hazardous Materials Safety.

(g) *One-way travel time; marking.* The jacket of a cargo tank to be used to transport a flammable cryogenic liquid must be marked on its right side near the front, in letters and numbers at least two inches high, ''One-Way-Travel-Time —— hrs.'', with the blank filled in with a number indicating the one-way travel time (OWTT), in hours, of the cargo tank for the flammable cryogenic liquid to be transported. A cargo tank that is partially unloaded at one or more locations must have additional marking ''One-Way-Travel-Time —— hrs. —— psig to —— psig at —— percent filling density,'' with the second blank filled in with the pressure existing after partial unloading and the third blank filled in with the set-to-discharge pressure of the control valve or pressure relief valve, and the fourth blank with the filling density following partial unloading. Multiple OWTT markings for different pressure levels are permitted. The abbreviation ''OWTT'' may be used in place of the words ''One-way-travel-time'' in the marking required by this paragraph.

(1) OWTT is based on the marked rated holding time (MRHT) of the cargo tank for the cryogenic liquid to be transported in the cargo tank. If the MRHT for the flammable cryogenic liquid is not displayed on or adjacent to the specification plate, this MRHT may be derived.

(2) The MRHT is converted to OWTT, in hours, as follows:

(i) For a tank with an MRHT of 72 hours or less,

$$OWTT=(MRHT-24)/2$$

(ii) For a tank with an MRHT greater than 72 hours,

$$OWTT=MRHT-48$$

(3) Each cargo tank motor vehicle used to transport a flammable cryogenic liquid must be examined after each shipment to determine its actual holding time. The record required by § 177.840(h) of this subchapter may be

used for this determination. If the examination indicates that the actual holding time of the cargo tank, after adjustment to reflect an average ambient temperature of 85 °F, is less than 90 percent of the marked rated holding time (MRHT) for the cryogenic liquid marked on the specification plate or adjacent thereto (see § 178.338–18(b) of this subchapter), the tank may not be refilled with any flammable cryogenic liquid until it is restored to its marked rated holding time value or it is remarked with the actual marked rated holding time determined by this examination. If the name of the flammable cryogenic liquid that was transported and its marked rated holding time is not displayed on or adjacent to the specification plate, this requirement may be met by deriving the MRHT of the cargo tank for that flammable cryogenic liquid and comparing that derived MRHT with the actual holding time after adjustment.

[Amdt. 173–166, 48 FR 27696, June 16, 1983]

EDITORIAL NOTE: For FEDERAL REGISTER citations affecting § 173.318, see the List of CFR Sections Affected appearing in the Finding Aids section of this volume.

§ 173.319 Cryogenic liquids in tank cars.

(a) *General requirements.* (1) A tank car containing a flammable cryogenic liquid may not be shipped unless it was loaded by, or with the consent of, the owner of the tank car.

(2) The amount of flammable cryogenic liquid loaded into a tank car must be determined, either by direct measurement or by calculation based on weight, to verify that the tank has not been filled to a level in excess of the limits specified in paragraph (d)(2) of this section. The weight of any flammable cryogenic liquid loaded, except hydrogen, must be checked by use of scales after disconnecting the loading line.

(3) Whenever a tank car containing any flammable cryogenic lading is not received by the consignee within 20 days from the date of shipment, the shipper of the lading shall notify the Bureau of Explosives.

(4) A tank car may not be loaded with any flammable cryogenic liquid:

(i) That may combine chemically with any residue in the tank to produce an unsafe condition,

(ii) That is colder than the design service temperature of the tank,

(iii) If the average daily pressure rise in the tank exceeded 3 psi during the prior shipment,

(iv) Unless it is marked with the name of contents, in accordance with § 172.330 of this subchapter.

(b) When a tank car containing a flammable cryogenic liquid is offered for transportation:

(1) At least 0.5 percent outage must be provided below the inlet of the pressure relief or pressure control valve at the start-to-discharge pressure setting of the valve, with the tank car in a level attitude, and

(2) The absolute pressure in the annular space must be less than 75 microns of mercury.

(c) *Temperature.* A flammable cryogenic liquid must be loaded into a tank car at such a temperature that the average daily pressure rise during transportation will not exceed 3 psi (see paragraph (a)(4)(iii) of this section and § 173.31(c)(13)).

(d) A Class DOT–113 tank car is authorized for the shipment of the following cryogenic liquids subject to the following additional requirements:

(1) For purposes of this section, ''filling density'' is defined as the percent ratio of the weight of lading in the tank to the weight of water that the tank will hold at the design service temperature (one pound of water = 27.737 cubic inches at 60° F., or one gallon of water = 231 cubic inches at 60° F. and weighs 8.32828 pounds).

(2) *Ethylene, and hydrogen (minimum 95 percent parahydrogen), cryogenic liquids* must be loaded and shipped in accordance with the following table:

PRESSURE CONTROL VALVE SETTING OR RELIEF VALVE SETTING

Maximum start-to-discharge pressure (psig)	Maximum permitted filling density (percent by weight)			
	Ethylene	Ethylene	Ethlyene	Hydrogen
17				6.60.

PRESSURE CONTROL VALVE SETTING OR RELIEF VALVE SETTING—Continued

Maximum start-to-discharge pressure (psig)	Maximum permitted filling density (percent by weight)			
	Ethylene	Ethylene	Ethlyene	Hydrogen
45	52.8			
75		51.1	51.1	
Maximum pressure when offered for transportation.	10 psig	10 psig	20 psig	
Design service temperature	Minus 260° F	Minus 260° F	Minus 155° F	Minus 423° F.
Specification (see § 173.31(a)(9))	113D60W 113C60W	113C120W	113D120W	113A175W. 113A60W.

(e) *Special requirements for class DOT 113 tank cars.* (1) A class DOT–113 tank car need not be periodically pressure tested; however, each shipment must be monitored to determine the average daily pressure rise in the tank car. If the average daily pressure rise during any shipment exceeds 0.2 Bar (3 psi) per day, the tank must be tested for thermal integrity prior to any subsequent shipment.

(2) *Thermal integrity test.* When required by paragraph (e)(1) of this section, either of the following thermal integrity tests may be used:

(i) *Pressure rise test.* The pressure rise in the tank may not exceed 0.34 Bar (5 psi) in 24 hours. When the pressure rise test is performed, the absolute pressure in the annular space of the loaded tank car may not exceed 75 microns of mercury at the beginning of the test and may not increase more than 25 microns during the 24-hour period; or

(ii) *Calculated heat transfer rate test.* The insulation system must be performance tested as prescribed in § 179.400–4 of this subchapter. When the calculated heat transfer rate test is performed, the absolute pressure in the annular space of the loaded tank car may not exceed 75 microns of mercury at the beginning of the test and may not increase more than 25 microns during the 24-hour period. The calculated heat transfer rate in 24 hours may not exceed:

(A) 120 percent of the appropriate standard heat transfer rate specified in § 179.401–1 of this subchapter, for DOT–113A60W and DOT–113C120W tank cars;

(B) 122.808 joules (0.1164 Btu/day/lb.) of inner tank car water capacity, for DOT–113A175W tank cars;

(C) 345.215 joules (0.3272 Btu/day/lb.) of inner tank car water capacity, for DOT–113C60W and 113D60W tank cars; or

(D) 500.09 joules (0.4740 Btu/day/lb.) of inner tank car water capacity, for DOT–113D120W tank cars.

(3) A tank car that fails a test prescribed in paragraph (e)(2) of this section must be removed from hazardous materials service. A tank car removed from hazardous materials service because it failed a test prescribed in paragraph (e)(2) of this section may not be used to transport a hazardous material unless the tank car conforms to all applicable requirements of this subchapter.

(4) Each frangible disc must be replaced with a new frangible disc every 12 months, and the replacement date must be marked on the car near the pressure relief valve information.

(5) Pressure relief valves and alternate pressure relief valves must be tested every five years. The start-to-discharge pressure and vapor tight pressure requirements for the pressure relief valves must be as specified in § 179.401–1 of this subchapter. The alternate pressure relief device values specified in § 179.401–1 of this subchapter for a DOT–113C120W tank car apply to a DOT–113D120W tank car.

(49 U.S.C. 1803, 1804, 1808; 49 CFR 1.53, app. A to part 1)

[Amdt. 173–166, 48 FR 27698, June 16, 1983, as amended by Amdt. 173–245, Sept. 21, 1995]

§ 173.320 Cryogenic liquids; exceptions.

(a) Atmospheric gases and helium, cryogenic liquids, in Dewar flasks, insulated cylinders, insulated portable tanks, insulated cargo tanks, and insulated tank cars, designed and constructed so that the pressure in such packagings will not exceed 25.3 psig

under ambient temperature conditions during transportation are not subject to the requirements of this subchapter when transported by motor vehicle or railcar except as specified in paragraphs (a)(1), (a)(2), and (a)(3) of this section.

(1) Sections 171.15 and 171.16 of this subchapter pertaining to the reporting of incidents, not including a release that is the result of venting through a pressure control valve, or the neck of the Dewar flask.

(2) Subparts A, B, C, and D of part 172, (§§ 174.24 for rail and 177.817 for highway) and in addition, part 172 in its entirety for oxygen.

(3) Subparts A and B of part 173, and §§ 174.1 and 177.800, 177.804, and 177.823 of this subchapter.

(b) The requirements of this subchapter do not apply to atmospheric gases and helium:

(1) During loading and unloading operations (pressure rises may exceed 25.3 psig); or

(2) When used in operation of a process system; such as a refrigeration system (pressure may exceed 25.3 psig).

(c) For transportation aboard aircraft, see § 171.11 of this subchapter.

[Amdt. 173–201, 52 FR 13043, Apr. 20, 1987, as amended at 62 FR 51561, Oct. 1, 1997]

§ 173.321 Ethylamine.

Ethylamine must be packaged as follows:

(a) In 1A1 drums which meet Packing Group I performance level requirements.

(b) In specification cylinders as prescribed for any compressed gas except acetylene.

[Amdt. 173–224, 55 FR 52667, Dec. 21, 1990]

§ 173.322 Ethyl chloride.

Ethyl chloride must be packaged in any of the following single or combination non-bulk packagings which meet Packing Group I performance level requirements:

(a) In 4C1, 4C2, 4D or 4F wooden boxes with glass, earthenware, or metal inner receptacles not over 500 g (17.6 ounces) capacity each;

(b) In 4G fiberboard boxes with glass, earthenware, or metal inner receptacles not over 500 g (17.6 ounces) capacity each. Outer packagings may not exceed 30 kg (66 pounds) gross weight;

(c) In 1A1 drums of not over 100 L (26 gallons) capacity each; or

(d) In specification cylinders as prescribed for any compressed gas except acetylene.

[Amdt. 173–224, 55 FR 52667, Dec. 21, 1990]

§ 173.323 Ethylene oxide.

(a) For packaging ethylene oxide in non-bulk packagings, silver mercury or any of its alloys or copper may not be used in any part of a packaging, valve, or other packaging appurtenance if that part, during normal conditions of transportation, may come in contact with ethylene oxide liquid or vapor. Copper alloys may be used only where gas mixtures do not contain free acetylene at any concentration that will form copper acetylene. All packaging and gaskets must be constructed of materials which are compatible with ethylene oxide and do not lower the auto-ignition temperature of ethylene oxide.

(b) Ethylene oxide must be packaged in one of the following:

(1) In 4G fiberboard boxes with inner glass ampoules or vials. Total quantity of ethylene oxide may not exceed 100 grams (3.5 ounces) per package. The completed package must be capable of passing Packing Group I performance tests.

(2) In 4G fiberboard boxes constructed with top and bottom pads and perimeter liner. Inner packagings must be aluminum receptacles of no more than 135 g (4.8 ounces) capacity cushioned with incombustible material. No more than 12 receptacles may be packed in one box, and no more than 10 boxes may be overpacked under the provisions of § 173.25 of this part. Each completed package must be capable of passing Packing Group I performance tests.

(3) In 4C1, 4C2, 4D or 4F wooden boxes or 4G fiberboard boxes with inner metal receptacles of no more than 340 g (12 ounces) capacity. The metal receptacle must be capable of withstanding no less than a 1241.1 kPa (180 psig) burst pressure. No more than 12 receptacles may be packed in one box, and each receptacle may not be liquid full

below 82 °C (180 °F). Each inner receptacle must be insulated and equipped with a relief device of the fusible plug type with yield temperature of 69 °C to 77 °C (156 °F to 171 °F). The capacity of relief device and insulation must be such that the charged receptacle will not explode when tested by the method described in CGA Pamphlet C–14 or other equivalent method. Each completed package must be capable of passing all Packing Group I performance tests.

(4) In specification cylinders, as authorized for any compressed gas except acetylene. Pressurizing valves and insulation are required for cylinders over 4 L (1 gallon) capacity. Eductor tubes must be provided for cylinders over 19 L (5 gallons) capacity. Cylinders must be seamless or welded steel (not brazed) with a nominal capacity of no more than 115 L (30 gallons) and may not be liquid full below 82 °C (180 °F). Before each refilling, each cylinder must be tested for leakage at no less than 103.4 kPa (15 psig) pressure. In addition, each cylinder must be equipped with a fusible type relief device with yield temperature of 69 °C to 77 °C (157 °F to 170 °F). The capacity of the relief device and the effectiveness of the insulation must be such that the charged cylinder will not explode when tested by the method described in CGA Pamphlet C–14 or other equivalent method.

(5) In 1A1 steel drums of no more than 231 L (61 gallons) and meeting Packing Group I performance standards. The drum must be lagged, of all welded construction with the inner shell having a minimum thickness of 1.7 mm (0.068 inches) and the outer shell having a minimum thickness of 2.4 mm (0.095 inches). Drums must be capable of withstanding a hydrostatic test pressure of 690 kPa (100 psig). Lagging must be of sufficient thickness so that the drum, when filled with ethylene oxide and equipped with the required pressure relief device, will not rupture when exposed to fire. The drum may not be liquid full below 85 °C (185 °F), and must be marked ''THIS END UP'' on the top head. Before each refilling, each drum must be tested for leakage at no less than 103 kPa (15 psig) pressure. Each drum must be equipped with a fusible type relief device with yield temperature of 69 °C to 77 °C (157 °F to 170 °F), and the capacity of the relief device must be such that the filled drum is capable of passing, without rupture, the test method described in CGA Pamphlet C–14 or other equivalent method.

(c) When § 172.101 of this subchapter specifies that a hazardous material be packaged under this section, only the following bulk packagings are authorized, subject to the requirements of subparts A and B of this part, the special provisions specified in Column 7 of the § 172.101 Table, and paragraphs (d) through (j) of this section:

(1) *Tank cars.* Class DOT 105J tank cars: Notwithstanding the requirements of § 173.31(c), each tank car must have a tank test pressure of at least 20.7 Bar (300 psi) no later than July 1, 2006.

(2) *Cargo tanks.* Specification MC 330 and MC 331 cargo tank motor vehicles.

(3) *Portable tanks.* DOT 51 portable tanks.

(d) The pressure relief devices must be set to function at 517 kPa (75 psig). Portable tanks fitted with non-reclosing devices made and in use prior to December 31, 1987, may continue to be used in ethylene oxide service.

(e) In determining outage, consideration must be given to the lading temperature and solubility of inert gas padding in ethylene oxide as well as the partial pressure exerted by the gas padding.

(f) Each tank, loaded or empty, must be padded with dry nitrogen or other suitable inert gas of sufficient quantity to render the vapor space of the tank nonflammable up to 41 °C (105 °F). The gas used for padding must be free of impurities which may cause the ethylene oxide to polymerize, decompose or undergo other violent chemical reaction.

(g) Copper, silver, mercury, magnesium or their alloys may not be used in any part of the tank or appurtenances that are normally in contact with the lading.

(h) Neoprene, natural rubber and asbestos gaskets are prohibited. All packing and gaskets must be made of materials which do not react with or lower the autoignition temperature of the lading.

(i) Each tank must be insulated with cork (at least 10 cm (4 inches) thick), or mineral wool, fiberglass or other suitable insulation material of sufficient thickness so that the thermal conductance at 16 °C (60 °F) is not more than 0.075 Btu per hour per square foot per degree F. temperature differential. Portable tanks made and in use prior to December 31, 1987 equipped with fusible plugs instead of a safety relief valve or frangible disc, must have sufficient insulation so that the tank as filled for shipment will not rupture in a fire. The insulation on portable tanks or cargo tank motor vehicles must be protected with a steel jacket at least 2.54 mm (0.100 inch) thick, or as required by the specification.

(j) Tank car tanks built after December 30, 1971 must be equipped with a thermometer well.

[Amdt. 173–224, 55 FR 52667, Dec. 21, 1990, as amended at 56 FR 66279, Dec. 20, 1991; Amdt. 173–236, 58 FR 50237, Sept. 24, 1993; Amdt. 173–234, 58 FR 51532, Oct. 1, 1993; Amdt. 173–145, 60 FR 49076, Sept. 21, 1995]

§ 173.334 Organic phosphates mixed with compressed gas.

Hexaethyl tetraphosphate, parathion, tetraethyl dithio pyrophosphate, tetraethyl pyrophosphate, or other Division 6.1 organic phosphates (including a compound or mixture), may be mixed with a non-flammable compressed gas. This mixture must not contain more than 20 percent by weight of organic phosphate and must be packaged in specification 3A240, 3AA240, 3B240, 4A240, 4B240, 4BA240, or 4BW240 cylinders meeting the following requirements.

(a) Each cylinder may be charged with not more than 5 kg (11.0 pounds) of the mixture, to a maximum filling density of not more than 80 percent of the water capacity;

(b) Each cylinder must be charged in compliance with § 173.301 (e) and (f);

(c) No cylinder may be equipped with an eduction tube or a fusible plug;

(d) No cylinder may be equipped with any valve unless the valve is a type approved by the Associate Administrator for Hazardous Materials Safety;

(e) Cylinders must be overpacked in a box so arranged to protect each valve or other closing device from damage. Except as provided in paragraph (f) of this section, no more than four cylinders may be packed in a box. Each box with its closing device protection must be sufficiently strong to protect all parts of each inside cylinder from deformation or breakage if the completed package is dropped 1.8 m (5.9 feet) onto solid concrete and impacted at the package's weakest point.

(f) Cylinders may be packed in strong wooden boxes with valves or other closing devices protected from injury, with not more than twelve cylinders in one outside wooden box. An outer fiberboard box may be used when not more than four such cylinders are to be shipped in one packaging. Valves must be adequately protected. Box and valve protection must be of strength sufficient to protect all parts of inner packagings and valves from deformation or breakage resulting from a drop of at least 1.8 m (5.9 feet) onto a concrete floor, impacting at the weakest point.

[Amdt. 173–224, 55 FR 52668, Dec. 21, 1990]

§ 173.335 Gas generator assemblies.

Gas generator assemblies (aircraft) containing liquefied non-flammable, non-toxic gas and a solid propellant cartridge must be packaged as follows:

(a) The gas must be packaged in specification steel cylinders authorized for any compressed gas except acetylene not exceeding 10.5 L (2.8 gallons) internal volume and having a minimum design burst pressure of 19,700 kPa (2,857 psi);

(b) Fittings must be protected against damage under conditions normal incident to transport, any trigger must be fitted with a safety locking pin, and a non-propulsive plug must be installed on the discharge tube; and

(c) Each complete unit must be individually and tightly packed to prevent movement in wooden boxes (4C1 or 4C2), plywood boxes (4D), reconstituted wood boxes (4F), fiberboard boxes (4G), or plastic boxes, (4H1and 4H2) of Packing Group II performance level, or in the original manufacturer's transit box.

[Amdt. 173–224, 55 FR 52669, Dec. 21, 1990]

§173.336 Nitrogen dioxide, liquefied, or dinitrogen tetroxide, liquefied.

Nitrogen dioxide, liquefied, or dinitrogen tetroxide, liquefied, must be packaged in specification cylinders as follows:

(a) As prescribed in §173.192, or

(b) Specification 3A480, 3AA480, 3AL1800, or 3E1800 metal cylinders, with valves removed, are authorized. Each valve opening must be closed by means of a solid metal plug with tapered thread properly luted to prevent leakages; valve protection cap must be used and be at least 4.76 mm (0.187 inches) thick gas-tight, with 4.76 mm (0.187 inches) faced seat for gasket and with United States standard form thread. Transportation in 3AL cylinders is authorized only by highway or rail. Each cylinder must be cleaned in compliance with the requirements of Federal Specification RR–C–901c, paragraphs 3.7.2 and 3.8.2. Cleaning agents equivalent to those specified in RR–C–901b may be used; however, any cleaning agent must not be capable of reacting with oxygen. One cylinder selected at random from a group of 200 or less cleaned at the same time must be tested for oil contamination in accordance with Specification RR–C–901b paragraph 4.4.2.3 and meet the standard of cleanliness specified therein.

[Amdt. 173–224, 55 FR 52669, Dec. 21, 1990, as amended at 57 FR 45464, Oct. 1, 1992]

§173.337 Nitric oxide.

Nitric oxide must be packed in Specification 3A1800, 3AA1800, 3E1800, or 3AL1800 cylinders charged to a pressure of not more than 5,170 kPa (750 psi) at 21 °C (70 °F). Cylinders must be equipped with a valve of stainless steel and valve seat of material which will not be deteriorated by contact with nitric oxide or nitrogen dioxide. Cylinders or valves may not be equipped with pressure relief devices of any type. Valve outlets must be sealed by a solid threaded cap or plug and an inert gasketing material. In addition—

(a) Specification 3E1800 cylinders must be overpacked in strong wooden boxes of such design as to protect valves from injury or accidental functioning under conditions incident to transportation. Each overpack must conform to §173.25.

(b) Specification 3A, 3AA, and 3AL cylinders must have their valves protected by metal caps or other equally protective guards securely attached to the cylinders and be of sufficient strength to protect the valves from injury during transit, or by overpacking in strong wooden boxes of such design as to protect valves from injury or accidental functioning under conditions incident to transportation. Each overpack must conform to §173.25. Transportation in 3AL cylinders is authorized only by highway or rail.

(c) Each cylinder must be cleaned in compliance with the requirements of Federal Specification RR–C–901C, paragraphs 3.7.2 and 3.8.2. Cleaning agents equivalent to those specified in RR–C–901C may be used; however, any cleaning agent must not be capable of reacting with oxygen. One cylinder selected at random from a group of 200 or less cleaned at the same time must be tested for oil contamination in accordance with Specification RR–C–901C paragraph 4.4.2.3 and meet the standard of cleanliness specified therein.

[Amdt. 173–224, 55 FR 52669, Dec. 21, 1990]

§173.338 Tungsten hexafluoride.

Tungsten hexafluoride must be packed in specification 3A, 3AA, 3BN, or 3E (§§178.36, 178.37, 178.39, 178.42 of this subchapter) cylinders. Cylinders must be equipped with a valve protection cap or be packed in a strong outside container complying with the provisions of §173.40. Outlets of any valves must be capped or plugged. As an alternative, the cylinder opening may be closed by the use of a metal plug. Specification 3E cylinders must be shipped in an overpack that complies with the provisions of §173.40.

][Amdt. 173–224, 55 FR 52669, Dec. 21, 1990]

§173.340 Tear gas devices.

(a) Packagings for tear gas devices must be approved prior to initial transportation by the Associate Administrator for Hazardous Materials Safety.

(b) Tear gas devices may not be assembled with, or packed in the same packaging with, mechanically- or manually-operated firing, igniting,

bursting, or other functioning elements unless of a type and design which has been approved by the Associate Administrator for Hazardous Materials Safety.

(c) Tear gas grenades, tear gas candles, and similar devices must be packaged in one of the following packagings conforming to the requirements of part 178 of this subchapter at the Packing Group II performance level:

(1) In UN 4C1, 4C2, 4D, or 4F metal-strapped wooden boxes. Functioning elements not assembled in grenades or devices must be in a separate compartment of these boxes, or in inner or separate outer boxes, UN 4C1, 4C2, 4D, or 4F, and must be so packed and cushioned that they may not come in contact with each other or with the walls of the box during transportation. Not more than 50 tear gas devices and 50 functioning elements must be packed in one box, and the gross weight of the outer box may not exceed 35 kg (77 pounds).

(2) In a UN 1A2 metal drum. Functioning elements must be packed in a separate inner packaging or compartment. Not more than 24 tear gas devices and 24 functioning elements must be packed in one outer drum, and the gross weight of the drum may not exceed 35 kg (77 pounds).

(3) In a UN 4G fiberboard box with inside tear gas devices meeting Specifications 2P or 2Q. Each inside packaging must be placed in fiberboard tubes fitted with metal ends or a fiber box with suitable padding. Not more than 30 inner packagings must be packed in one outer box, and the gross weight of the outer box may not exceed 16 kg (35 pounds).

(4) In other packagings of a type or design which has been approved by the Associate Administrator for Hazardous Materials Safety.

(d) Tear gas devices may be shipped completely assembled when offered by or consigned to the U.S. Department of Defense, provided the functioning elements are so packed that they cannot accidentally function. Outer packagings must be UN 4C1, 4C2, 4D, or 4F metal-strapped wooden boxes.

[Amdt. 173–224, 55 FR 52669, Dec. 21, 1990]

Subpart H—[Reserved]

Subpart I—Class 7 (Radioactive) Materials

SOURCE: Amdt. 173–244, 60 FR 50307, Sept. 28, 1995, unless otherwise noted.

§ 173.401 Scope.

(a) This subpart sets forth requirements for the packaging and transportation of Class 7 (radioactive) materials by offerors and carriers subject to this subchapter. The requirements prescribed in this subpart are in addition to, not in place of, other requirements set forth in this subchapter for Class 7 (radioactive) materials and those of the Nuclear Regulatory Commission in 10 CFR Part 71.

(b) This subpart does not apply to:

(1) Class 7 (radioactive) materials produced, used, transported, or stored within an establishment other than during the course of transportation, including storage in transportation.

(2) Class 7 (radioactive) materials contained in a medical device, such as a heart pacemaker, which is implanted in a human being or live animal.

(3) Class 7 (radioactive) materials that have been injected into, ingested by, or are otherwise placed into, and are still in, human beings or live animals.

§ 173.403 Definitions.

For purposes of this subpart—

A_1 means the maximum activity of special form Class 7 (radioactive) material permitted in a Type A package.

A_2 means the maximum activity of Class 7 (radioactive) material, other than special form, LSA or SCO, permitted in a Type A package. These values are either listed in § 173.435 or derived in accordance with the procedure prescribed in § 173.433.

Class 7 (radioactive) material. See the definition of *Radioactive material* in this section.

Closed transport vehicle means a transport vehicle or conveyance equipped with a securely attached exterior enclosure that during normal transportation restricts the access of unauthorized persons to the cargo space containing the Class 7 (radioactive) materials. The enclosure may be either temporary or permanent, and in the case of packaged materials may be of the ''see-through'' type, and must limit access from top, sides, and bottom.

Containment system means the assembly of components of the packaging intended to retain the radioactive contents during transportation.

Conveyance means:

(1) For transport by public highway or rail: any transport vehicle or large freight container;

(2) For transport by water: any vessel, or any hold, compartment, or defined deck area of a vessel including any transport vehicle on board the vessel; and

(3) For transport by aircraft, any aircraft.

Design means the description of a special form Class 7 (radioactive) material, a package, packaging, or LSA–III, that enables those items to be fully identified. The description may include specifications, engineering drawings, reports showing compliance with regulatory requirements, and other relevant documentation.

Exclusive use (also referred to in other regulations as ''sole use'' or ''full load'') means sole use by a single consignor of a conveyance for which all initial, intermediate, and final loading and unloading are carried out in accordance with the direction of the consignor or consignee. The consignor and the carrier must ensure that any loading or unloading is performed by personnel having radiological training and resources appropriate for safe handling of the consignment. The consignor must issue specific instructions in writing, for maintenance of exclusive use shipment controls, and include them with the shipping paper information provided to the carrier by the consignor.

Fissile material means plutonium-238, plutonium-239, plutonium-241, uranium-233, uranium-235, or any combination of these radionuclides. The definition does not apply to unirradiated natural uranium and depleted uranium, and natural uranium or depleted uranium that has been irradiated in a thermal reactor. Certain additional exceptions are provided in § 173.453.

Fissile material, controlled shipment means any shipment that contains one or more packages that have been assigned, in accordance with § 173.457, nuclear criticality control transport indices greater than 10.

Freight container means a reusable container having a volume of 1.81 cubic meters (64 cubic feet) or more, designed and constructed to permit its being lifted with its contents intact and intended primarily for containment of packages in unit form during transportation. A ''small freight container'' is one which has either one outer dimension less than 1.5 meters (4.9 feet) or an internal volume of not more than 3.0 cubic meters (106 cubic feet). All other freight containers are designated as ''large freight containers.''

Highway route controlled quantity means a quantity within a single package which exceeds:

(1) 3,000 times the A_1 value of the radionuclides as specified in § 173.435 for special form Class 7 (radioactive) material;

(2) 3,000 times the A_2 value of the radionuclides as specified in § 173.435 for normal form Class 7 (radioactive) material; or

(3) 1,000 TBq (27,000 Ci), whichever is least.

Limited quantity of Class 7 (radioactive) material means a quantity of Class 7 (radioactive) material not exceeding the materials package limits specified in § 173.425 and conforming with requirements specified in § 173.421.

Low Specific Activity (LSA) material means Class 7 (radioactive) material with limited specific activity which satisfies the descriptions and limits set forth below. Shielding materials surrounding the LSA material may not be considered in determining the estimated average specific activity of the package contents. LSA material must be in one of three groups:

(1) *LSA–I.*

(i) Ores containing only naturally occurring radionuclides (e.g., uranium,

thorium) and uranium or thorium concentrates of such ores; or

(ii) Solid unirradiated natural uranium or depleted uranium or natural thorium or their solid or liquid compounds or mixtures; or

(iii) Class 7 (radioactive) material, other than fissile material, for which the A_2 value is unlimited; or

(iv) Mill tailings, contaminated earth, concrete, rubble, other debris, and activated material in which the Class 7 (radioactive) material is essentially uniformly distributed and the average specific activity does not exceed $10^{-6}A_2$/g.

(2) *LSA–II.*

(i) Water with tritium concentration up to 0.8 TBq/liter (20.0 Ci/liter); or

(ii) Material in which the Class 7 (radioactive) material is distributed throughout and the average specific activity does not exceed $10^{-4}A_2$/g for solids and gases, and $10^{-5}A_2$/g for liquids.

(3) *LSA–III.* Solids (e.g., consolidated wastes, activated materials) that meet the requirements of § 173.468 and which:

(i) The Class 7 (radioactive) material is distributed throughout a solid or a collection of solid objects, or is essentially uniformly distributed in a solid compact binding agent (such as concrete, bitumen, ceramic, etc.); and

(ii) The Class 7 (radioactive) material is relatively insoluble, or it is intrinsically contained in a relatively insoluble material, so that, even under loss of packaging, the loss of Class 7 (radioactive) material per package by leaching when placed in water for seven days would not exceed 0.1 A_2; and

(iii) The average specific activity of the solid does not exceed 2 x $10^{-3}A_2$/g.

Low toxicity alpha emitters are:

(1) Natural uranium, depleted uranium, and natural thorium;

(2) Ores, concentrates or tailings containing uranium-235, uranium-238, thorium-232, thorium-228 and thorium-230; or

(3) Alpha emitters with a half-life of less than 10 days.

Maximum normal operating pressure means the maximum gauge pressure that would develop in a receptacle in a period of one year, in the absence of venting or cooling, under the heat conditions specified in 10 CFR 71.71(c)(1)

Multilateral approval means approval of a package or shipment by the relevant competent authority of the country of origin and of each country through or into which the package or shipment is to be transported. This definition does not include approval from a country over which Class 7 (radioactive) materials are carried in aircraft, if there is no scheduled stop in that country.

Natural thorium means thorium with the naturally occurring distribution of thorium isotopes (essentially 100 percent by weight of thorium-232).

Non-fixed radioactive contamination means radioactive contamination that can be readily removed from a surface by wiping with an absorbent material. Non-fixed (removable) radioactive contamination is not significant if it does not exceed the limits specified in § 173.443.

Normal form Class 7 (radioactive) material means Class 7 (radioactive) material which has not been demonstrated to qualify as ''special form Class 7 (radioactive) material.''

Package means, for Class 7 (radioactive) materials, the packaging together with its radioactive contents as presented for transport.

(1) ''Excepted package'' means a packaging together with its excepted Class 7 (radioactive) materials as specified in §§ 173.421–173.426 and 173.428.

(2) ''Type A package'' means a packaging that, together with its radioactive contents limited to A_1 or A_2 as appropriate, meets the requirements of §§ 173.410 and 173.412 and is designed to retain the integrity of containment and shielding required by this part under normal conditions of transport as demonstrated by the tests set forth in § 173.465 or § 173.466, as appropriate. A Type A package does not require Competent Authority Approval.

(3) ''Type B package'' means a Type B packaging that, together with its radioactive contents, is designed to retain the integrity of containment and shielding required by this part when subjected to the normal conditions of transport and hypothetical accident test conditions set forth in 10 CFR Part 71.

(i) ''Type B(U) package'' means a Type B packaging that, together with

its radioactive contents, for international shipments requires unilateral approval only of the package design and of any stowage provisions that may be necessary for heat dissipation.

(ii) ''Type B(M) package'' means a Type B packaging, together with its radioactive contents, that for international shipments requires multilateral approval of the package design, and may require approval of the conditions of shipment. Type B(M) packages are those Type B package designs which have a maximum normal operating pressure of more than 700 kilopascals per square centimeter (100 pounds per square inch) gauge or a relief device which would allow the release of Class 7 (radioactive) material to the environment under the hypothetical accident conditions specified in 10 CFR Part 71.

(4) ''Industrial package'' means a packaging that, together with its low specific activity (LSA) material or surface contaminated object (SCO) contents, meets the requirements of §§173.410 and 173.411. Industrial packages are categorized in §173.411 as either:

(i) ''Industrial package Type 1 (IP–1)'';

(ii) ''Industrial package Type 2 (IP–2)''; or

(iii) ''Industrial package Type 3 (IP–3)''.

Packaging means, for Class 7 (radioactive) materials, the assembly of components necessary to ensure compliance with the packaging requirements of this subpart. It may consist of one or more receptacles, absorbent materials, spacing structures, thermal insulation, radiation shielding, service equipment for filling, emptying, venting and pressure relief, and devices for cooling or absorbing mechanical shocks. The conveyance, tie-down system, and auxiliary equipment may sometimes be designated as part of the packaging.

Radiation level means the radiation dose-equivalent rate expressed in millisievert(s) per hour or mSv/h (millirem(s) per hour or mrem/h). Neutron flux densities may be converted into radiation levels according to Table 1:

TABLE 1.—NEUTRON FLUENCE RATES TO BE REGARDED AS EQUIVALENT TO A RADIATION LEVEL OF 0.01 MSV/H (1 MREM/H) [1]

Energy of neutron	Flux density equivalent to 0.01 mSv/h (1 mrem/h) neutrons per square centimeter per second ($n/cm^2/s$)
Thermal (2.510E–8)MeV	272.0
1 keV	272.0
10 keV	281.0
100 keV	47.0
500 keV	11.0
1 MeV	7.5
5 MeV	6.4
10 MeV	6.7

[1] Flux densities equivalent for energies between those listed in this table may be obtained by linear interpolation.

Radioactive contents means a Class 7 (radioactive) material, together with any contaminated liquids or gases within the package.

Radioactive instrument and article means any manufactured instrument and article such as an instrument, clock, electronic tube or apparatus, or similar instrument and article having Class 7 (radioactive) material in gaseous or non-dispersible solid form as a component part.

Radioactive material means any material having a specific activity greater than 70 Bq per gram (0.002 microcurie per gram) (see definition of ''specific activity'').

Special form Class 7 (radioactive) material means Class 7 (radioactive) material which satisfies the following conditions:

(1) It is either a single solid piece or is contained in a sealed capsule that can be opened only by destroying the capsule;

(2) The piece or capsule has at least one dimension not less than 5 millimeters (0.2 inch); and

(3) It satisfies the test requirements of §173.469. Special form encapsulations designed in accordance with the requirements of §173.389(g) in effect on June 30, 1983 (see 49 CFR Part 173, revised as of October 1, 1982), and constructed prior to July 1, 1985 and special form encapsulations designed in accordance with the requirements of §173.403 in effect on March 31, 1996 (see 49 CFR Part 173, revised as of October

1, 1995), and constructed prior to April 1, 1997, may continue to be used. Any other special form encapsulation must meet the requirements of this paragraph.

Specific activity of a radionuclide means the activity of the radionuclide per unit mass of that nuclide. The specific activity of a material in which the radionuclide is essentially uniformly distributed is the activity per unit mass of the material.

Surface Contaminated Object (SCO) means a solid object which is not itself radioactive but which has Class 7 (radioactive) material distributed on any of its surfaces. SCO must be in one of two groups with surface activity not exceeding the following limits:

(1) SCO–I: A solid object on which:

(i) The non-fixed contamination on the accessible surface averaged over 300 cm^2 (or the area of the surface if less than 300 cm^2) does not exceed 4 Bq/cm^2 (10^{-4} microcurie/cm^2) for beta and gamma and low toxicity alpha emitters, or 0.4 Bq/cm^2 (10^{-5} microcurie/cm^2) for alpha emitters;

(ii) The fixed contamination on the accessible surface averaged over 300 cm^2 (or the area of the surface if less than 300 cm^2) does not exceed 4×10^4 Bq/cm^2 (1.0 microcurie/cm^2) for beta and gamma and low toxicity alpha emitters, or 4×10^3 Bq/cm^2 (0.1 microcurie/cm^2) for all other alpha emitters; and

(iii) The non-fixed contamination plus the fixed contamination on the inaccessible surface averaged over 300 cm^2 (or the area of the surface if less than 300 cm^2) does not exceed 4×10^4 Bq/cm^2 (1 microcurie/cm^2) for beta and gamma and low toxicity alpha emitters, or 4×10^3 Bq/cm^2 (0.1 microcurie/cm^2) for all other alpha emitters.

(2) SCO–II: A solid object on which the limits for SCO–I are exceeded and on which:

(i) The non-fixed contamination on the accessible surface averaged over 300 cm^2 (or the area of the surface if less than 300 cm^2) does not exceed 400 Bq/cm^2 (10^{-2} microcurie/cm^2) for beta and gamma and low toxicity alpha emitters or 40 Bq/cm^2 (10^{-3} microcurie/cm^2) for all other alpha emitters;

(ii) The fixed contamination on the accessible surface averaged over 300 cm^2 (or the area of the surface if less than 300 cm^2) does not exceed 8×10^5 Bq/cm^2 (20 microcurie/cm^2) for beta and gamma and low toxicity alpha emitters, or 8×10^4 Bq/cm^2 (2 microcuries/cm^2) for all other alpha emitters; and

(iii) The non-fixed contamination plus the fixed contamination on the inaccessible surface averaged over 300 cm^2 (or the area of the surface if less than 300 cm^2) does not exceed 8×10^5 Bq/cm^2 (20 microcuries/cm^2) for beta and gamma and low toxicity alpha emitters, or 8×10^4 Bq/cm^2 (2 microcuries/cm^2) for all other alpha emitters.

Transport index (TI) means the dimensionless number (rounded up to the next tenth) placed on the label of a package to designate the degree of control to be exercised by the carrier during transportation. The transport index is determined as follows:

(1) For nonfissile material packages, the number determined by multiplying the maximum radiation level in milliSievert(s) per hour at one meter (3.3 feet) from the external surface of the package by 100 (equivalent to the maximum radiation level in millirem per hour at one meter (3.3 feet)); or

(2) For fissile material packages, the number determined by multiplying the maximum radiation level in milliSievert per hour at one meter (3.3 feet) from any external surface of the package by 100 (equivalent to the maximum radiation level in millirem per hour at one meter (3.3 feet)) or, for criticality control purposes, the number obtained by dividing 50 by the allowable number of packages which may be transported together, whichever number is larger.

Type A quantity means a quantity of Class 7 (radioactive) material, the aggregate radioactivity which does not exceed A_1 for special form Class 7 (radioactive) material or A_2 for normal form Class 7 (radioactive) material, where A_1 and A_2 values are given in § 173.435 or are determined in accordance with § 173.433.

Type B quantity means a quantity of material greater than a Type A quantity.

Unilateral approval means approval of a package solely by the competent authority of the country of origin.

Unirradiated thorium means thorium containing not more than 10^{-7} grams uranium-233 per gram of thorium-232.

Unirradiated uranium means uranium containing not more than 10^{-6} grams plutonium per gram of uranium-235 and a fission product activity of not more than 9 MBq (0.24 millicuries) of fission products per gram of uranium-235.

Uranium—natural, depleted or enriched means the following:

(1) ''Natural uranium'' means uranium with the naturally occurring distribution of uranium isotopes (approximately 0.711 weight percent uranium-235, and the remainder essentially uranium-238).

(2) ''Depleted uranium'' means uranium containing less uranium-235 than the naturally occurring distribution of uranium isotopes.

(3) ''Enriched uranium'' means uranium containing more uranium-235 than the naturally occurring distribution of uranium isotopes.

[Amdt. 173–244, 60 FR 50307, Sept. 28, 1995, as amended by Amdt. 173–244, 61 FR 20750, May 8, 1996]

§ 173.410 General design requirements.

In addition to the requirements of subparts A and B of this part, each package used for the shipment of Class 7 (radioactive) materials must be designed so that—

(a) The package can be easily handled and properly secured in or on a conveyance during transport.

(b) Each lifting attachment that is a structural part of the package must be designed with a minimum safety factor of three against yielding when used to lift the package in the intended manner, and it must be designed so that failure of any lifting attachment under excessive load would not impair the ability of the package to meet other requirements of this subpart. Any other structural part of the package which could be used to lift the package must be capable of being rendered inoperable for lifting the package during transport or must be designed with strength equivalent to that required for lifting attachments.

(c) The external surface, as far as practicable, will be free from protruding features and will be easily decontaminated.

(d) The outer layer of packaging will avoid, as far as practicable, pockets or crevices where water might collect.

(e) Each feature that is added to the package will not reduce the safety of the package.

(f) The package will be capable of withstanding the effects of any acceleration, vibration or vibration resonance that may arise under normal conditions of transport without any deterioration in the effectiveness of the closing devices on the various receptacles or in the integrity of the package as a whole and without loosening or unintentionally releasing the nuts, bolts, or other securing devices even after repeated use (see §§ 173.24, 173.24a, and 173.24b).

(g) The materials of construction of the packaging and any components or structure will be physically and chemically compatible with each other and with the package contents. The behavior of the packaging and the package contents under irradiation will be taken into account.

(h) All valves through which the package contents could escape will be protected against unauthorized operation;

(i) For transport by air—

(1) The temperature of the accessible surfaces of the package will not exceed 50°C (122°F) at an ambient temperature of 38°C (100°F) with no account taken for insulation;

(2) The integrity of containment will not be impaired if the package is exposed to ambient temperatures ranging from −40°C (−40°F) to +55°C (131°F); and

(3) Packages containing liquid contents will be capable of withstanding, without leakage, an internal pressure that produces a pressure differential of not less than 95 kPa (13.8 lb/in^2).

[Amdt. 173–244, 60 FR 50307, Sept. 28, 1995, as amended by Amdt. 173–244, 61 FR 20750, May 8, 1996]

§ 173.411 Industrial packagings.

(a) *General.* Each industrial packaging must comply with the requirements of this section which specifies

packaging tests, and record retention applicable to Industrial Packaging Type 1 (IP–1), Industrial Packaging Type 2 (IP–2), and Industrial Packaging Type 3 (IP–3).

(b) *Industrial packaging certification and tests.* (1) Each IP–1 must meet the general design requirements prescribed in § 173.410.

(2) Each IP–2 must meet the general design requirements prescribed in § 173.410 and when subjected to the tests specified in § 173.465 (c) and (d) or evaluated against these tests by any of the methods authorized by § 173.461(a), must prevent:

(i) Loss or dispersal of the radioactive contents; and

(ii) A significant increase in the radiation levels recorded or calculated at the external surfaces for the condition before the test.

(3) Each IP–3 packaging must meet the requirements for an IP–1 and an IP–2, and must meet the requirements specified in § 173.412(a) through § 173.412(j).

(4) Each specification IM 101 or IM 102 portable tank (§§ 178.270, 178.271, 178.272 of this subchapter) that is certified as meeting the requirements for an IP–2 or IP–3 must:

(i) Satisfy the requirements for IP–2 or IP–3, respectively;

(ii) Be capable of withstanding a test pressure of 265 kPa (37.1 pounds per square inch) gauge;

(iii) Be designed so that any added shielding is capable of withstanding the static and dynamic stresses resulting from normal handling and normal conditions of transport; and

(iv) Be designed so that loss of shielding will not result in a significant increase in the radiation levels recorded at the external surfaces.

(5) Each freight container that is certified as meeting the requirements of IP–2 or IP–3, must—

(i) Satisfy the requirements for IP–2 or IP–3, respectively;

(ii) Be designed to conform to the requirements of ISO 1496–3–1995(E), ''Series 1 Freight Containers—Specifications and Testing—Part 3: Tank Containers for Liquids, Gases and Pressurized Dry Bulk'';

(iii) Be designed so that loss of shielding will not result in a significant increase in the radiation levels recorded at the external surfaces if they are subjected to the tests specified in ISO 1496/1–1995(E); and

(iv) For international transportation, have a safety approval plate in conformance with 49 CFR 451.21 through 451.25.

(c) Except for IP–1 packagings, each offeror of an industrial package must maintain on file for at least one year after the latest shipment, and shall provide to the Associate Administrator for Hazardous Materials Safety on request, complete documentation of tests and an engineering evaluation or comparative data showing that the construction methods, packaging design, and materials of construction comply with that specification.

[Amdt. 173–244, 60 FR 50307, Sept. 28, 1995, as amended by Amdt. 173–244, 61 FR 20750, May 8, 1996]

§ 173.412 Additional design requirements for Type A packages.

In addition to meeting the general design requirements prescribed in § 173.410, each Type A packaging must be designed so that—

(a) The outside of the packaging incorporates a feature, such as a seal, that is not readily breakable, and that, while intact, is evidence that the package has not been opened. In the case of packages shipped in closed transport vehicles in exclusive use, the cargo compartment, instead of the individual packages, may be sealed.

(b) The smallest external dimension of the package is not less than 10 centimeters (4 inches).

(c) Containment and shielding is maintained during transportation and storage in a temperature range of −40°C (−40°F) to 70°C (158°F). Special attention shall be given to liquid contents and to the potential degradation of the packaging materials within the temperature range.

(d) The packaging must include a containment system securely closed by a positive fastening device that cannot be opened unintentionally or by pressure that may arise within the package during normal transport. Special form Class 7 (radioactive) material, as demonstrated in accordance with § 173.469, may be considered as a component of

the containment system. If the containment system forms a separate unit of the package, it must be securely closed by a positive fastening device that is independent of any other part of the package.

(e) For each component of the containment system account is taken, where applicable, of radiolytic decomposition of materials and the generation of gas by chemical reaction and radiolysis.

(f) The containment system will retain its radioactive contents under the reduction of ambient pressure to 25 kPa (3.6 pounds per square inch).

(g) Each valve, other than a pressure relief device, is provided with an enclosure to retain any leakage.

(h) Any radiation shield that encloses a component of the packaging specified as part of the containment system will prevent the unintentional escape of that component from the shield.

(i) Failure of any tie-down attachment that is a structural part of the packaging, under both normal and accident conditions, must not impair the ability of the package to meet other requirements of this subpart.

(j) When evaluated against the performance requirements of this section and the tests specified in §173.465 or using any of the methods authorized by §173.461(a), the packaging will prevent—

(1) Loss or dispersal of the radioactive contents; and

(2) A significant increase in the radiation levels recorded or calculated at the external surfaces for the condition before the test.

(k) Each packaging designed for liquids will—

(1) Be designed to provide for ullage to accommodate variations in temperature of the contents, dynamic effects and filling dynamics;

(2) Meet the conditions prescribed in paragraph (j) of this section when subjected to the tests specified in §173.466 or evaluated against these tests by any of the methods authorized by §173.461(a); and

(3) Either—

(i) Have sufficient suitable absorbent material to absorb twice the volume of the liquid contents. The absorbent material must be compatible with the package contents and suitably positioned to contact the liquid in the event of leakage; or

(ii) Have a containment system composed of primary inner and secondary outer containment components designed to assure retention of the liquid contents within the secondary outer component in the event that the primary inner component leaks.

(l) Each package designed for gases, other than tritium not exceeding 40 TBq (1000Ci) or noble gases not exceeding the A_2 value appropriate for the noble gas, will be able to prevent loss or dispersal of contents when the package is subjected to the tests prescribed in §173.466 or evaluated against these tests by any of the methods authorized by §173.461(a).

§173.413 Requirements for Type B packages.

Except as provided in §173.416, each Type B(U) or Type B(M) package must be designed and constructed to meet the applicable requirements specified in 10 CFR Part 71.

§173.415 Authorized Type A packages.

The following packages are authorized for shipment if they do not contain quantities exceeding A_1 or A_2 as appropriate:

(a) DOT Specification 7A (§178.350 of this subchapter) Type A general packaging. Each offeror of a Specification 7A package must maintain on file for at least one year after the latest shipment, and shall provide to DOT on request, complete documentation of tests and an engineering evaluation or comparative data showing that the construction methods, packaging design, and materials of construction comply with that specification. Use of Specification 7A packagings designed in accordance with the requirements of §178.350 of this subchapter in effect on June 30, 1983 (see 49 CFR Part 178 revised as of October 1, 1982), is not authorized after April 1, 1997.

(b) Any other Type A packaging that also meets the applicable standards for fissile materials in 10 CFR Part 71 and is used in accordance with §173.471.

(c) Any Type B, B(U) or B(M) packaging authorized pursuant to §173.416.

(d) Any foreign-made packaging that meets the standards in IAEA ''Safety Series No. 6'' and bears the marking ''Type A'' and was used for the import of Class 7 (radioactive) materials. Such packagings may be subsequently used for domestic and export shipments of Class 7 (radioactive) materials provided the offeror obtains the applicable documentation of tests and engineering evaluations and maintains the documentation on file in accordance with paragraph (a) of this section. These packagings must conform with requirements of the country of origin (as indicated by the packaging marking) and the IAEA regulations applicable to Type A packagings.

§ 173.416 Authorized Type B packages.

Each of the following packages is authorized for shipment of quantities exceeding A_1 or A_2, as appropriate:

(a) Any Type B, Type B(U) or Type B(M) packaging that meets the applicable requirements of 10 CFR Part 71 and that has been approved by the U.S. Nuclear Regulatory Commission may be shipped pursuant to § 173.471.

(b) Any Type B, B(U) or B(M) packaging that meets the applicable requirements of the regulations of the International Atomic Energy Agency (IAEA) in its ''Regulations for the Safe Transport of Radioactive Materials, Safety Series No. 6'' and for which the foreign competent authority certificate has been revalidated by DOT pursuant to § 173.473. These packagings are authorized only for export and import shipments.

(c) DOT Specification 6M (§ 178.354 of this subchapter) metal packaging, only for solid or gaseous Class 7 (radioactive) materials that will not undergo pressure-generating decomposition at temperatures up to 121°C (250°F) and that do not generate more than 10 watts of radioactive decay heat.

(d) For contents in other than special form; DOT Specification 20WC (§ 178.362 of this subchapter), wooden protective jacket, when used with a single, snug-fitting inner DOT Specification 2R (§ 178.360 of this subchapter). For liquid contents, the inner packaging must conform to § 173.412(j) and (k).

(e) For contents in special form only; DOT Specification 20WC (§ 178.362 of this subchapter), wooden protective jacket, with a single snug-fitting inner Type A packaging that has a metal outer wall and conforms to § 178.350 of this subchapter. Radioactive decay heat may not exceed 100 watts.

(f) For contents in special form only; DOT Specification 21WC (§ 178.364 of this subchapter), wooden protective overpack, with a single inner DOT Specification 2R (§ 178.360 of this subchapter). Contents must be loaded within the inner packaging in such a manner as to prevent loose movement during transportation. The inner packaging must be securely positioned and centered within the overpack so that there will be no significant displacement of the inner packaging if subjected to the 9 meter (30 feet) drop test described in 10 CFR part 71.

§ 173.417 Authorized fissile materials packages.

(a) Except as provided in § 173.453, fissile materials containing not more than A_1 or A_2 as appropriate, must be packaged in one of the following packagings:

(1) DOT Specification 6L (§ 178.352 of this subchapter), metal packaging, for materials prescribed in paragraph (b)(1) of this section.

(2) DOT Specification 6M (§ 178.354 of this subchapter), metal packaging, for materials prescribed in paragraph (b)(2) of this section.

(3) Any packaging listed in § 173.415, limited to the Class 7 (radioactive) materials specified in 10 CFR part 71, subpart C.

(4) Any other Type A or Type B, Type B(U), or Type B(M) packaging for fissile Class 7 (radioactive) materials that also meets the applicable standards for fissile materials in 10 CFR part 71.

(5) Any other Type A or Type B, Type B(U), or Type B(M) packaging that also meets the applicable requirements for fissile material packaging in Section V of the International Atomic Energy Agency ''Regulations for the Safe Transport of Radioactive Materials, Safety Series No. 6,'' and for which the foreign competent authority certificate has been revalidated by the U.S. Competent Authority, in accordance

with § 173.473. These packages are authorized only for export and import shipments.

(6) A 55-gallon 1A2 steel drum, meeting the applicable packaging testing requirements of subpart M of Part 178 of this subchapter at the packing group I performance level, subject to the following conditions:

(i) The quantity may not exceed 350 grams of uranium-235 in any non-pyrophoric form, enriched to any degree in the uranium-235 isotope;

(ii) Each drum must have a minimum 18 gauge body and bottom head and 16 gauge removable top head with one or more corrugations in the cover near the periphery;

(iii) Closure must conform to § 178.352 of this subchapter;

(iv) At least four equally spaced 12 millimeter (0.5 inch) diameter vent holes must be provided on the sides of the drum near the top, each covered with weatherproof tape; or equivalent device;

(v) Appropriate primary, inner containment of the contents and sufficient packaging material, such as plastic or metal jars or cans, must be provided such that Specification 7A (§ 178.350 of this subchapter) provisions are satisfied by the inner packaging;

(vi) Each inner container must be capable of venting if subjected to the thermal test described in 10 CFR part 71;

(vii) Liquid contents must be packaged in accordance with § 173.412 (j) and (k); and

(viii) The maximum weight of contents, including internal packaging, may not exceed 91 kilograms (200 pounds) with fissile material content limited as shown in Table 2:

TABLE 2.—FISSILE MATERIAL CONTENT AND TRANSPORT INDEX FOR UN1A2 PACKAGE

Maximum quantity and minimum transport index		Maximum No. of packages transported as a fissile material controlled shipment
U–235 per package (grams)	Minimum transport index per package	
350	1.8	72
300	1.0	129
250	0.5	256
200	0.3	500
150	0.1	500
100	0.1	500
50	(1)	(2)

[1] Transport index is limited by the external radiation levels.
[2] Maximum number is limited by the total transport index.

(7) Any metal cylinder that meets the requirements of § 173.415 and § 178.350 of this subchapter for Specification 7A Type A packaging may be used for the transport of residual ''heels'' of enriched solid uranium hexafluoride without a protective overpack in accordance with Table 3, as follows:

TABLE 3.—ALLOWABLE CONTENT OF URANIUM HEXAFLUORIDE (UF_6) ''HEELS'' IN A SPECIFICATION 7A CYLINDER

Maximum cylinder diameter		Cylinder volume		Maximum uranium-235 enrichment (weight percent)	Maximum ''Heel'' weight per cylinder			
					UF6		Uranium-235	
Centimeters	Inches	Liters	Cubic feet		kg	lb	kg	lb
12.7	5	8.8	0.311	100.0	0.045	0.1	0.031	0.07
20.3	8	39.0	1.359	12.5	0.227	0.5	0.019	0.04
30.5	12	68.0	2.410	5.0	0.454	1.0	0.015	0.03
76.0	30	725.0	25.64	5.0	11.3	25.0	0.383	0.84
122.0	48	3,084.0	[1]108.9	4.5	22.7	50.0	0.690	1.52
122.0	48	4,041.0	[2]142.7	4.5	22.7	50.0	0.690	1.52

[1] 10 ton.
[2] 14 ton.

(8) DOT Specification 20PF–1, 20PF–2, or 20PF–3 (§ 178.356 of this subchapter), or Specification 21PF–1A, 21PF–1B, or 21PF–2 (§ 178.358 of this subchapter) phenolic-foam insulated overpack with snug fitting inner metal cylinders, meeting all requirements of §§ 173.24, 173.410, 173.412, and 173.420 and the following:

(i) Handling procedures and packaging criteria must be in accordance with DOE Report ORO–651 or ANSI N14.1.

(ii) Quantities of uranium hexafluoride are authorized as shown in Table 6 of this section, with each package assigned a minimum transport index as also shown.

(b) Fissile Class 7 (radioactive) materials with radioactive content exceeding A_1 or A_2 must be packaged in one of the following packagings:

(1) DOT Specification 6L (§ 178.352 of this subchapter), metal packaging. These packages may contain only uranium-235, plutonium-239, or plutonium-241, as metal, oxide, or compounds that do not decompose at temperatures up to 149°C (300°F). Radioactive decay heat output may not exceed 5 watts. Class 7 (radioactive) materials in normal form must be packaged in one or more tightly sealed metal or polyethylene bottles within a DOT Specification 2R (§ 178.360 of this subchapter) containment vessel. Authorized contents are limited in accordance with Table 4, as follows:

TABLE 4.—AUTHORIZED CONTENTS IN KILOGRAMS (KG) AND CONDITIONS FOR SPECIFICATION 6L PACKAGES

Uranium-235		Plutonium (Plutonium solutions are not authorized)		Minimum fissile transport index	Maximum No. of packages transported as a fissile material control shipment
H/X<=3[1]	3 H/X<= 10	H/X<= 10	10 <= H/X <= 20		
14	[2] 3.6	.....	.....	1.3	80
	.....	2.5	2.4	1.8	50

[1] H/X is the ratio of hydrogen to fissile atoms in their inner containment with all sources of hydrogen in the containment considered.
[2] Volume not to exceed 3.6 liters.

(2) DOT Specification 6M (§ 178.354 of this subchapter), metal packaging. These packages must contain only solid Class 7 (radioactive) materials that will not decompose at temperatures up to 121°C (250°F). Radioactive decay heat output may not exceed 10 watts. Class 7 (radioactive) materials in other than special form must be packaged in one or more tightly sealed metal cans or polyethylene bottles within a DOT Specification 2R (§ 178.360 of this subchapter) containment vessel.

(i) For fissile material with a criticality TI equal to 0.0, packages are limited to the following amounts of fissile Class 7 (radioactive) materials: 1.6 kilograms of uranium-235; 0.9 kilograms of plutonium (except that due to the 10-watt thermal decay heat limitation, the limit for plutonium-238 is 0.02 kilograms); and 0.5 kilograms of uranium-233. The maximum ratio of hydrogen to fissile material may not exceed three, including all of the sources of hydrogen within the DOT Specification 2R containment vessel.

(ii) Maximum quantities of fissile material and other restrictions for materials with a criticality TI of greater than 0.0 are given in Table 5. The minimum transport index to be assigned per package and, for fissile material, controlled shipments, the allowable number of similar packages per conveyance and per transport vehicle are shown in Table 5. Where a maximum ratio of hydrogen to fissile material is specified in Table 5, only the hydrogen interspersed with the fissile material must be considered. For a uranium-233 shipment, the maximum inside diameter of the inner containment vessel may not exceed 12.1 centimeters (4.75 inches). Where necessary, a tight-fitting steel insert must be used to reduce a larger diameter inner containment vessel specified in § 178.354 of this subchapter

to the 12.1 centimeter (4.75 inch) limit.
Table 5 is as follows:

TABLE 5.—AUTHORIZED CONTENTS FOR SPECIFICATION 6M PACKAGES[1]

Uranium-233[5]			Uranium-235[4,7]			Plutonium[2,3,4]			Minimum transport index	Maximum no. pkgs. transported as a fissile material control shipment
Metal or alloy	Compounds		Metal or alloy	Compounds		Metal or alloy	Compounds			
H/X=0[8]	H/X=0	H/X<=3	H/X=0	H/X=0	H/X<=3	H/X=0	H/X=0	H/X<=3		
0.5	0.5	0.5	1.6	1.6	1.6	[9]0.9	[9]0.9	[9]0.9	0	N/A
3.6	4.4	2.9	7.2	7.6	5.3	3.1	4.1	3.4	0.1	1,250
[6]4.2	5.2	3.5	8.7	9.6	6.4	3.4	4.5	4.1	0.2	625
[6]5.2	6.8	4.5	11.2	13.9	8.3	4.2		4.5	0.5	250
			13.5	16.0	10.1	4.5			1.0	125
				26.0	16.1				5.0	25
				32.0	19.5				10.0	12

[1] Quantity in kilograms.
[2] Minimum percentage of plutonium-240 is 5 weight percent.
[3] 4.5 kilogram limitation of plutonium due to watt decay heat limitation.
[4] For a mixture of uranium-235 and plutonium an equal amount of uranium-235 may be substituted for any portion of the plutonium authorized.
[5] Maximum inside diameter of specification 2R containment vessel not to exceed 12.1 centimeters (4.75 inches) (see paragraph (b)(2)(ii) of this section).
[6] Granulated or powdered metal with any particle less than 6.4 millimeters (0.25 inch) in the smallest dimension is not authorized.
[7] Except for material with a criticality TI of 0.0, the maximum permitted uranium-235 enrichment is 93.5 percent.
[8] H/X is the ratio of hydrogen to fissile atoms in the inner containment.
[9] For Pu–238, the limit is 0.02 kg because of the 10 watt thermal decay heat limitation.

(3) Type B, or Type B(U), or B(M) packaging that meets the standards for packaging of fissile materials in 10 CFR part 71, and is approved by the U.S. Nuclear Regulatory Commission and used in accordance with § 173.471.

(4) Type B, B(U), or B(M) packaging that meets the applicable requirements for fissile Class 7 (radioactive) materials in Section V of the IAEA ''Regulations for the Safe Transport of Radioactive Materials, Safety Series No. 6'' and for which the foreign competent authority certificate has been revalidated by the U.S. Competent Authority in accordance with § 173.473. These packagings are authorized only for import and export shipments.

(5) DOT Specifications 20PF–1, 20PF–2, or 20PF–3 (§ 178.356 of this subchapter), or DOT Specifications 21PF–1A or 21PF–1B (§ 178.358 of this subchapter) phenolic-foam insulated overpack with snug fitting inner metal cylinders, meeting all requirements of §§ 173.24, 173.410, and 173.412, and the following:

(i) Handling procedures and packaging criteria must be in accordance with DOE Report ORO–651 or ANSI N14.1; and

(ii) Quantities of uranium hexafluoride are authorized as shown in Table 6, with each package assigned a minimum transport index as also shown:

TABLE 6.—AUTHORIZED QUANTITIES OF URANIUM HEXAFLUORIDE

Protective overpack specification number	Maximum inner cylinder diameter		Maximum weight of UF6 contents		Maximum U–235 enrichment (weight/percent)	Minimum transport index
	Centimeters	Inches	Kilograms	Pounds		
20PF–1	12.7	5	25	55	100.0	0.1
20PF–2	20.3	8	116	255	12.5	0.4
20PF–3	30.5	12	209	460	5.0	1.1
21PF–1A[1] or 21PF–1B[1]	[2]76.0	[2]30	2,250	4,950	5.0	5.0
21PF–1A[1] or 21PF–1B[1]	[3]76.0	[3]30	2,282	5,020	5.0	5.0
21PF–2[1]	[2]76.0	[2]30	2,250	4,950	5.0	5.0
21PF–2[1]	[3]76.0	[3]30	2,282	5,020	5.0	5.0

[1] For 76 cm (30 in) cylinders, the maximum H/U atomic ratio is 0.088.

[2] Model 30A inner cylinder (reference ORO–651).
[3] Model 30B inner cylinder (reference ORO–651).

[Amdt. 173–244, 60 FR 50307, Sept. 28, 1995, as amended by Amdt. 173–244, 61 FR 20750, May 8, 1996]

§ 173.418 Authorized packages—pyrophoric Class 7 (radioactive) materials.

Pyrophoric Class 7 (radioactive) materials, as referenced in the § 172.101 Table of this subchapter, in quantities not exceeding A_2 per package must be transported in DOT Specification 7A packagings constructed of materials that will not react with, nor be decomposed by, the contents. Contents of the package must be—

(a) In solid form and must not be fissile unless excepted by § 173.453;

(b) Contained in sealed and corrosion resistant receptacles with positive closures (friction or slip-fit covers or stoppers are not authorized);

(c) Free of water and contaminants that would increase the reactivity of the material; and

(d) Inerted to prevent self-ignition during transport by either—

(1) Mixing with large volumes of inerting materials, such as graphite, dry sand, or other suitable inerting material, or blended into a matrix of hardened concrete; or

(2) Filling the innermost receptacle with an appropriate inert gas or liquid.

§ 173.419 Authorized packages—oxidizing Class 7 (radioactive) materials.

(a) An oxidizing Class 7 (radioactive) material, as referenced in the § 172.101 Table of this subchapter, is authorized in quantities not exceeding an A_2 per package, in a DOT Specification 7A package provided that—

(1) The contents are:

(i) Not fissile;

(ii) Packed in inside packagings of glass, metal or compatible plastic; and

(iii) Cushioned with a material that will not react with the contents; and

(2) The outside packaging is made of wood, metal, or plastic.

(b) The package must be capable of meeting the applicable test requirements of § 173.465 without leakage of contents.

(c) For shipment by air, the maximum quantity in any package may not exceed 11.3 kilograms (25 pounds).

§ 173.420 Uranium hexafluoride (fissile, fissile excepted and non-fissile).

(a) In addition to any other applicable requirements of this subchapter, uranium hexafluoride, fissile, fissile excepted or non-fissile, must be offered for transportation as follows:

(1) Before initial filling and during periodic inspection and test, packagings must be cleaned in accordance with American National Standard N14.1.

(2) Packagings must be designed, fabricated, inspected, tested and marked in accordance with—

(i) American National Standard N14.1 (1990, 1987, 1982, 1971) in effect at the time the packaging was manufactured;

(ii) Specifications for Class DOT–106A multi-unit tank car tanks (§§ 179.300 and 179.301 of this subchapter); or

(iii) Section VIII, Division I of the ASME Code, provided the packaging—

(A) Was manufactured on or before June 30, 1987;

(B) Conforms to the edition of the ASME Code in effect at the time the packaging was manufactured;

(C) Is used within its original design limitations; and

(D) Has shell and head thicknesses that have not decreased below the minimum value specified in the following table:

Packaging model	Minimum thickness; millimeters (inches)
1S, 2S	1.58 (0.062)
5A, 5B, 8A	3.17 (0.125)
12A, 12B	4.76 (0.187)
30B	7.93 (0.312)
48A, F, X, and Y	12.70 (0.500)
48T, O, OM, OM Allied, HX, H, AND G.	6.35 (0.250)

(3) Uranium hexafluoride must be in solid form.

(4) The volume of solid uranium hexafluoride, except solid depleted uranium hexafluoride, at 20°C (68° F) may

not exceed 61% of the certified volumetric capacity of the packaging. The volume of solid depleted uranium hexafluoride at 20° C (68° F) may not exceed 62% of the certified volumetric capacity of the packaging.

(5) The pressure in the package at 20° C (68° F) must be less than 101.3 kPa (14.8 psia).

(b) Packagings for uranium hexafluoride must be periodically inspected, tested, marked and otherwise conform with the American National Standard N14.1–1990.

(c) Each repair to a packaging for uranium hexafluoride must be performed in accordance with American National Standard N14.1–1990.

§173.421 Excepted packages for limited quantities of Class 7 (radioactive) materials.

(a) A Class 7 (radioactive) material whose activity per package does not exceed the limits specified in §173.425 and its packaging are excepted from the specification packaging, marking, labeling and, if not a hazardous substance or hazardous waste, the shipping paper and certification requirements of this subchapter and requirements of this subpart if:

(1) Each package meets the general design requirements of §173.410;

(2) The radiation level at any point on the external surface of the package does not exceed 0.005 mSv/hour (0.5 mrem/hour);

(3) The nonfixed (removable) radioactive surface contamination on the external surface of the package does not exceed the limits specified in §173.443(a);

(4) The outside of the inner packaging or, if there is no inner packaging, the outside of the packaging itself bears the marking ''Radioactive'';

(5) Except as provided in §173.426, the package does not contain more than 15 grams of uranium-235; and

(6) The material is otherwise prepared for shipment as specified in accordance with §173.422.

(b) A limited quantity of Class 7 (radioactive) material that is a hazardous substance or a hazardous waste, is not subject to the provisions in §172.203(d) or §172.204(c)(4) of this subchapter.

§173.422 Additional requirements for excepted packages containing Class 7 (radioactive) materials.

(a) Except for materials subject to the shipping paper requirements of subpart C of Part 172 of this subchapter, excepted packages prepared for shipment under the provisions of §173.421, §173.424, §173.426, or §173.428 must be certified as being acceptable for transportation by having a notice enclosed in or on the package, included with the packing list, or otherwise forwarded with the package. This notice must include the name of the consignor or consignee and one of the following statements, as appropriate:

(1) ''This package conforms to the conditions and limitations specified in 49 CFR 173.421 for radioactive material, excepted package-limited quantity of material, UN2910'';

(2) ''This package conforms to the conditions and limitations specified in 49 CFR 173.424 for radioactive material, excepted package-instruments or articles, UN2910'';

(3) ''This package conforms to the conditions and limitations specified in 49 CFR 173.426 for radioactive material, excepted package-articles manufactured from natural or depleted uranium, or natural thorium, UN2910''; or

(4) ''This package conforms to the conditions and limitations specified in 49 CFR 173.428 for radioactive material, excepted package-empty package, UN2910.''

(b) An excepted package of Class 7 (radioactive) material that is classed as Class 7 and is prepared for shipment under the provisions of §173.421, §173.423, §173.424, §173.426, or §173.428 is not subject to the requirements of this subchapter, except for—

(1) Sections 171.15, 171.16, 174.750, 176.710, and 177.861 of this subchapter, pertaining to the reporting of incidents and decontamination, when transported by a mode other than air;

(2) Sections 171.15, 171.16, and 175.700(b) of this subchapter pertaining to the reporting of incidents and decontamination when transported by aircraft; and

(3) The training requirements of subpart H of part 172 of this subchapter

and, for materials that meet the definition of a hazardous substance or a hazardous waste, the shipping paper requirements of subpart C of Part 172 of this subchapter.

[Amdt. 173–244, 60 FR 50307, Sept. 28, 1995, as amended by Amdt. 173–244, 61 FR 20751, May 8, 1996; 62 FR 51561, Oct. 1, 1997]

§ 173.423 Requirements for multiple hazard limited quantity Class 7 (radioactive) materials.

(a) Except as provided in § 173.4, when a limited quantity radioactive material meets the definition of another hazard class or division, it must be—

(1) Classed for the additional hazard;

(2) Packaged to conform with the requirements specified in § 173.421(a)(1) through (a)(5) or § 173.424(a) through (g), as appropriate; and

(3) Offered for transportation in accordance with the requirements applicable to the hazard for which it is classed.

(b) A limited quantity Class 7 (radioactive) material which is classed other than Class 7 in accordance with this subchapter is excepted from the requirements of §§ 173.422(a), 172.203(d), and 172.204(c)(4) of this subchapter if the entry ''Limited quantity radioactive material'' appears on the shipping paper in association with the basic description.

§ 173.424 Excepted packages for radioactive instruments and articles.

A radioactive instrument or article and its packaging is excepted from the specification packaging, shipping paper and certification, marking and labeling requirements of this subchapter and requirements of this subpart, if:

(a) Each package meets the general design requirements of § 173.410;

(b) The activity of the instrument or article does not exceed the relevant limit listed in Table 7 in § 173.425;

(c) The total activity per package does not exceed the relevant limit listed in Table 7 in § 173.425;

(d) The radiation level at 10 cm (4 in) from any point on the external surface of any unpackaged instrument or article does not exceed 0.1 mSv/hour (10 mrem/hour);

(e) The radiation level at any point on the external surface of a package bearing the article or instrument does not exceed 0.005 mSv/hour (0.5 mrem/hour), or, for exclusive use domestic shipments, 0.02 mSv (2 mrem/hour);

(f) The nonfixed (removable) radioactive surface contamination on the external surface of the package does not exceed the limits specified in § 173.443(a);

(g) Except as provided in § 173.426, the package does not contain more than 15 grams of uranium-235; and

(h) The package is otherwise prepared for shipment as specified in § 173.422.

§ 173.425 Table of activity limits—excepted quantities and articles.

The limits applicable to instruments, articles, and limited quantities subject to exceptions under §§ 173.421 and 173.424 are set forth in Table 7 as follows:

TABLE 7.—ACTIVITY LIMITS FOR LIMITED QUANTITIES, INSTRUMENTS, AND ARTICLES

Nature of contents	Instruments and articles		Materials package limits [1]
	Limits for each instrument or article [1]	Package limits [1]	
Solids:			
Special form	10^{-2} A_1	A_1	10^{-3} A_1
Normal form	10^{-2} A_2	A_2	10^{-3} A_2
Liquids:			
Tritiated water:			
<0.0037 TBq/liter (0.1 Ci/L)			37 TBq (1,000 Ci)
0.0037 TBq to 0.037 TBq/L (0.1 Ci to 1.0 Ci/L).			3.7 TBq (100 Ci)
>0.037 TBq/L (1.0 Ci/L)			0.037 TBq (1.0 Ci)
Other Liquids	10^{-3} A_2	10^{-1} A_2	10^{-4} A_2
Gases:			
Tritium [2]	2 x 10^{-2} A_2	2 x 10^{-1} A_2	2 x 10^{-2} A_2
Special form	10^{-3} A_1	10^{-2} A_1	10^{-3} A_1
Other form	10^{-3} A_2	10^{-2} A_2	10^{-3} A_2

[1] For mixtures of radionuclides see § 173.433(d).
[2] These values also apply to tritium in activated luminous paint and tritium adsorbed on solid carriers.

[Amdt. 173–244, 60 FR 50307, Sept. 28, 1995, as amended by Amdt. 173–244, 61 FR 20751, May 8, 1996]

§ 173.426 Excepted packages for articles containing natural uranium or thorium.

A manufactured article in which the sole Class 7 (radioactive) material content is natural or unirradiated depleted uranium or natural thorium and its packaging is excepted from the specification packaging, shipping paper and certification, marking, and labeling requirements of this subchapter and requirements of this subpart if:

(a) Each package meets the general design requirements of § 173.410;

(b) The outer surface of the uranium or thorium is enclosed in an inactive sheath made of metal or other durable protective material;

(c) The conditions specified in § 173.421(a) (2), (3) and (4) are met; and

(d) The article is otherwise prepared for shipment as specified in § 173.422.

[Amdt. 173–244, 60 FR 50307, Sept. 28, 1995, as amended by Amdt. 173–244, 61 FR 20752, May 8, 1996]

§ 173.427 Transport requirements for low specific activity (LSA) Class 7 (radioactive) materials and surface contaminated objects (SCO).

(a) In addition to other applicable requirements specified in this subchapter, low specific activity (LSA) materials and surface contaminated objects (SCO), unless excepted by paragraph (d) of this section, must be packaged in accordance with paragraph (b) or (c) of this section and must be transported in accordance with the following conditions:

(1) The external dose rate must not exceed an external radiation level of 10 mSv/h (1 rem/h) at 3 meters from the unshielded material;

(2) The quantity of LSA and SCO material in any single conveyance must not exceed the limits specified in Table 9;

(3) LSA material and SCO that are or contain fissile material must meet the applicable requirements of §§ 173.451 and 173.467;

(4) Packages must meet the contamination control limits specified in § 173.443;

(5) External radiation levels must comply with § 173.441; and

(6) For LSA material and SCO required by this section to be consigned as exclusive use:

(i) Shipments must be loaded by the consignor and unloaded by the consignee from the conveyance or freight container in which originally loaded;

(ii) There must be no loose Class 7 (radioactive) material in the conveyance, however, when the conveyance is the packaging there must be no leakage of Class 7 (radioactive) material from the conveyance;

(iii) Packages must be braced so as to prevent shifting of lading under conditions normally incident to transportation;

(iv) Specific instructions for maintenance of exclusive use shipment controls must be provided by the offeror to the carrier. Such instructions must be included with the shipping paper information;

(v) Except for shipments of unconcentrated uranium or thorium ores, the transport vehicle must be placarded in accordance with subpart F of Part 172 of this subchapter;

(vi) For domestic transportation only, packages are excepted from the marking and labeling requirements of this subchapter. However, the exterior of each nonbulk package must be stenciled or otherwise marked ''Radioactive—LSA'' or ''Radioactive—SCO'', as appropriate, and nonbulk packages that contain a hazardous substance must also be stenciled or otherwise marked with the letters ''RQ'' in association with the above description; and

(vii) Except when transported in an industrial package in accordance with Table 8, transportation by aircraft is prohibited.

(b) Except as provided in paragraph (c) of this section, LSA material and SCO must be packaged as follows:

(1) In an industrial package (IP–1, IP–2 or IP–3; § 173.411), subject to the limitations of Table 8;

(2) For domestic transportation only, in a DOT Specification 7A (§ 178.350 of this subchapter) Type A package. The requirements of § 173.412 (a), (b), (c) and (k) do not apply;

(3) For domestic transportation only, in a strong, tight package that prevents leakage of the radioactive content under normal conditions of transport. In addition to the requirements of paragraph (a) of this section, the following requirements must be met:

(i) The shipment must be exclusive use;

(ii) The quantity of Class 7 (radioactive) material in each packaging may not exceed an A_2 quantity;

(4) For domestic transportation only, in a packaging that complies with the provisions of 10 CFR 71.52, and is transported in exclusive use; or

(5) Any Type B, B(U) or B(M) packaging authorized pursuant to § 173.416.

(c) LSA–I and SCO–I (see § 173.403), unless packaged in accordance with paragraph (b) of this section, must be packaged in bulk packagings in accordance with this paragraph. The shipment must be, in addition to complying with the applicable requirements of paragraph (a) of this section, exclusive use:

(1) *Solids.* Packages must be strong tight packagings, meeting the requirements of subpart B of this Part. The requirements of § 173.410 do not apply.

(2) *Liquids.* Liquids must be transported in the following packagings:

(i) Specification 103CW, 111A60W7 (§§ 179.200, 179.201, 179.202 of this subchapter) tank cars. Bottom openings in tanks are prohibited; or

(ii) Specification MC 310, MC 311, MC 312, MC 331 or DOT 412 (§ 178.348 or § 178.337 of this subchapter) cargo tank motor vehicles. Bottom outlets are not authorized. Trailer-on-flat-car service is not authorized.

(d) Except for transportation by aircraft, LSA material and SCO that conform to the provisions specified in 10 CFR 20.2005 are excepted from all requirements of this subchapter pertaining to Class 7 (radioactive) materials when offered for transportation for disposal or recovery. A material which meets the definition of another hazard class is subject to the provisions of this subchapter relating to that hazard class.

(e) LSA and SCO that exceed the packaging limits in this section must be packaged in accordance with 10 CFR part 71.

(f) Tables 8 and 9 are as follows:

TABLE 8.—INDUSTRIAL PACKAGE INTEGRITY REQUIREMENTS FOR LSA MATERIAL AND SCO

Contents	Industrial packaging type	
	Exclusive use shipment	Non-exclusive use shipment
LSA–I:		
Solid	IP–1	IP–1
Liquid	IP–1	IP–2
LSA–II:		
Solid	IP–2	IP–2
Liquid and gas	IP–2	IP–3
LSA–III	IP–2	IP–3
SCO–I	IP–1	IP–1
SCO–II	IP–2	IP–2

TABLE 9—CONVEYANCE ACTIVITY LIMITS FOR LSA MATERIAL AND SCO

Nature of material	Activity limit for conveyances
LSA–I	No limit.
LSA–II and LSA–III; noncombustible solids.	No limit.
LSA–II and LSA–III; Combustible solids and all liquids and gases.	100 A_2
SCO	100 A_2

[Amdt. 173–244, 60 FR 50307, Sept. 28, 1995, as amended by Amdt. 173–244, 61 FR 20752, May 8, 1996]

§ 173.428 Empty Class 7 (radioactive) materials packaging.

A packaging which previously contained Class 7 (radioactive) materials and has been emptied of contents as far as practical, is excepted from the shipping paper and certification, marking and labeling requirements of this subchapter, and from requirements of this chapter, provided that—

(a) The packaging meets the requirements of § 173.421(a) (2), (3), and (5) of this subpart;

(b) The packaging is in unimpaired condition and is securely closed so that there will be no leakage of Class 7 (radioactive) material under conditions normally incident to transportation;

(c) Internal contamination does not exceed 100 times the limits in § 173.443(a);

(d) Any labels previously applied in conformance with Subpart E of Part 172 of this subchapter are removed, obliterated, or covered and the ''Empty''

label prescribed in §172.450 of this subchapter is affixed to the packaging; and

(e) The packaging is prepared for shipment as specified in §173.422.

[Amdt. 173–244, 60 FR 50307, Sept. 28, 1995, as amended by Amdt. 173–244, 61 FR 20752, May 8, 1996]

§173.431 Activity limits for Type A and Type B packages.

(a) Except for LSA material and SCO, a Type A package may not contain a quantity of Class 7 (radioactive) materials greater than A_1 for special form Class 7 (radioactive) material or A_2 for normal form Class 7 (radioactive) material as listed in §173.435, or, for Class 7 (radioactive) materials not listed in §173.435, as determined in accordance with §173.433.

(b) The limits on activity contained in a Type B, Type B(U), or Type B(M) package are those prescribed in §§173.416 and 173.417, or in the applicable approval certificate under §§173.471, 173.472 or 173.473.

§173.433 Requirements for determining A_1 and A_2 values for radionuclides and for the listing of radionuclides on shipping papers and labels.

(a) Values of A_1 and A_2 for individual radionuclides that are the basis for many activity limits elsewhere in this subchapter are given in the table in §173.435.

(b) For individual radionuclides whose identities are known, but which are not listed in the table in §173.435, the determination of the values of A^1 and A_2 requires approval from the Associate Administrator for Hazardous Materials Safety except that the values of A_1 and A_2 in Table 10 may be used without obtaining approval from Associate Administrator for Hazardous Materials Safety.

(c) In calculating A_1 and A_2 values for a radionuclide not listed in the table in §173.435, a single radioactive decay chain in which the radionuclides are present in their naturally-occurring proportions, and in which no daughter nuclide has a half life either longer than 10 days or longer than that of the parent nuclide, will be considered as a single radionuclide, and the activity to be taken into account and the A_1 or A_2 value to be applied will be those corresponding to the parent nuclide of that chain. Otherwise, the parent and daughter nuclides will be considered as a mixture of different nuclides.

(d) Mixtures of radionuclides whose identities and respective activities are known, must conform to the following conditions:

(1) For special form Class 7 (radioactive) material:

$$\sum_i \frac{B(i)}{A_1(i)} \quad \text{less than or equal to 1}$$

Where B(i) is the activity of radionuclide i and $A_1(i)$ is the A_1 value for radionuclide i; or

(2) For other forms of Class 7 (radioactive) material, either—

$$\sum_i \frac{B(i)}{A_2(i)} \quad \text{less than or equal to 1}$$

Where B(i) is the activity of radionuclide i and $A_2(i)$ is the A_2 value for radionuclide i; or

$$A_2 \text{ for mixture} = \frac{1}{\sum_i \frac{f(i)}{A_2(i)}}$$

where f(i) is the fraction of activity of nuclide i in the mixture and $A_2(i)$ is the appropriate A_2 value for nuclide i.

(e) When the identity of each nuclide is known but the individual activities of some of the radionuclides are not known, the radionuclides may be grouped and the lowest A_1 or A_2 value, as appropriate, for the radionuclides in each group may be used in applying the formulas in paragraph (d) of this section. Groups may be based on the total alpha activity and the total beta/gamma activity when these are known, using the lowest A_1 or A_2 values for the alpha emitters or beta/gamma emitters, respectively.

(f) *Shipping papers and labeling.* (1) For mixtures of radionuclides, the radionuclides (n) that must be shown on shipping papers and labels in accordance with §§172.203 and 172.403 of this subchapter, respectively, must be

determined on the basis of the following formula:

$$\sum_{i=1}^{n} \frac{a_{(i)}}{A_{(i)}} \geq 0.95 \sum_{i=1}^{n+m} \frac{a_{(i)}}{A_{(i)}}$$

Where n + m represents all the radionuclides in the mixture, m are the radionuclides that do not need to be considered, a_i is the activity of radionuclide i in the mixture, and A_i is the A_1 or A_2 value, as appropriate for radionuclide i.

(g) Table 10 is as follows:

TABLE 10.—GENERAL VALUES FOR A_1 and A_2

Contents	A_1		A_2	
	(TBq)	(Ci)	(TBq)	(Ci)
Only beta or gamma emitting nuclides are known to be present	0.2	5	0.02	0.5
Alpha emitting nuclides are known to be present or relevant data are available	0.10	2.70	2×10^{-5}	5.41×10^{-4}

§ 173.434 Activity-mass relationships for uranium and natural thorium.

The table of activity-mass relationships for uranium and natural thorium are as follows:

Thorium and uranium enrichment[1](Wt% ^{235}U present)	Specific activity			
	TBq/gram	Grams/Tbq	Ci/gram	Grams/Ci
0.45 (depleted)	1.9×10^{-8}	5.4×10^{7}	5.0×10^{-7}	2.0×10^{6}
0.72 (natural)	2.6×10^{-8}	3.8×10^{7}	7.1×10^{-7}	1.4×10^{6}
1.0	2.8×10^{-8}	3.6×10^{7}	7.6×10^{-7}	1.3×10^{6}
1.5	3.7×10^{-8}	2.7×10^{7}	1.0×10^{-6}	1.0×10^{6}
5.0	1.0×10^{-7}	1.0×10^{7}	2.7×10^{-6}	3.7×10^{5}
10.0	1.8×10^{-7}	5.6×10^{6}	4.8×10^{-6}	2.1×10^{5}
20.0	3.7×10^{-7}	2.7×10^{6}	1.0×10^{-5}	1.0×10^{5}
35.0	7.4×10^{-7}	1.4×10^{6}	2.0×10^{-5}	5.0×10^{4}
50.0	9.3×10^{-7}	1.1×10^{6}	2.5×10^{-5}	4.0×10^{4}
90.0	2.1×10^{-6}	4.7×10^{5}	5.8×10^{-5}	1.7×10^{4}
93.0	2.6×10^{-6}	3.9×10^{5}	7.0×10^{-5}	1.4×10^{4}
95.0	3.4×10^{-6}	3.0×10^{5}	9.1×10^{-5}	1.1×10^{4}
Natural thorium	8.1×10^{-9}	1.2×10^{8}	2.2×10^{-7}	4.6×10^{6}

[1] The figures for uranium include representative values for the activity of uranium-234 which is concentrated during the enrichment process. The activity for thorium includes the equilibrium concentration of thorium-228.

§ 173.435 Table of A_1 and A_2 values for radionuclides.

The table of A_1 and A_2 values for radionuclides is as follows:

Symbol of radionuclide	Element and atomic number	A_1 (TBq)	A_1 (Ci)	A_2 (TBq)	A_2 (Ci)	Specific activity	
						(TBq/g)	(Ci/g)
Ac-225	Actinium(89)	0.6	16.2	1×10^{-2}	0.270	2.1×10^{3}	5.8×10^{4}
Ac-227		40	1080	2×10^{-5}	5.41×10^{-4}	2.7	7.2×10^{1}
Ac-228		0.6	16.2	0.4	10.8	8.4×10^{4}	2.2×10^{6}
Ag-105	Silver(47)	2	54.1	2	54.1	1.1×10^{3}	3.0×10^{4}
Ag-108m		0.6	16.2	0.6	16.2	9.7×10^{-1}	2.6×10^{1}
Ag-110m		0.4	10.8	0.4	10.8	1.8×10^{2}	4.7×10^{3}
Ag-111		0.6	16.2	0.5	13.5	5.8×10^{3}	1.6×10^{5}
Al-26	Aluminum(13)	0.4	10.8	0.4	10.8	7.0×10^{-4}	1.9×10^{-2}
Am-241	Americium(95)	2	54.1	2×10^{-4}	5.41×10^{-3}	1.3×10^{1}	3.4
Am-242m		2	54.1	2×10^{-4}	$5.4.1\times10^{-3}$	3.6×10^{-1}	1.0×10^{1}
Am-243		2	54.1	2×10^{-4}	5.41×10^{-3}	7.4×10^{-3}	2.0×10^{-1}
Ar-37	Argon(18)	40	1080	40	1080	3.7×10^{3}	9.9×10^{4}
Ar-39		20	541	20	541	1.3	3.4×10^{1}
Ar-41		0.6	16.2	0.6	16.2	1.5×10^{6}	4.2×10^{7}
Ar-42		0.2	5.41	0.2	5.41	9.6	2.6×10^{2}
As-72	Arsenic(33)	0.2	5.41	0.2	5.41	6.2×10^{4}	1.7×10^{6}
As-73		40	1080	40	1080	8.2×10^{2}	2.2×10^{4}
As-74		1	27.0	0.5	13.5	3.7×10^{3}	9.9×10^{4}
As-76		0.2	5.41	0.2	5.41	5.8×10^{4}	1.6×10^{6}
As-77		20	541	0.5	13.5	3.9×10^{4}	1.0×10^{6}
At-211	Astatine(85)	30	811	2	54.1	7.6×10^{4}	2.1×10^{6}
Au-193	Gold(79)	6	162	6	162	3.4×10^{4}	9.2×10^{5}
Au-194		1	27.0	1	27.0	1.5×10^{4}	4.1×10^{5}
Au-195		10	270	10	270	1.4×10^{2}	3.7×10^{3}
Au-196		2	54.1	2	54.1	4.0×10^{3}	1.1×10^{5}
Au-198		3	81.1	0.5	13.5	9.0×10^{3}	2.4×10^{5}
Au-199		10	270	0.9	24.3	7.7×10^{3}	2.1×10^{5}
Ba-131	Barium(56)	2	54.1	2	54.1	3.1×10^{3}	8.4×10^{4}
Ba-133m		10	270	0.9	24.3	2.2×10^{4}	6.1×10^{5}
Ba-133		3	81.1	3	81.1	9.4	2.6×10^{2}
Ba-140		0.4	10.8	0.4	10.8	2.7×10^{3}	7.3×10^{4}
Be-7	Beryllium(4)	20	541	20	541	1.3×10^{4}	3.5×10^{5}
Be-10		20	541	0.5	13.5	8.3×10^{-4}	2.2×10^{-2}
Bi-205	Bismuth(83)	0.6	16.2	0.6	16.2	1.5×10^{3}	4.2×10^{4}
Bi-206		0.3	8.11	0.3	8.11	3.8×10^{3}	1.0×10^{5}
Bi-207		0.7	18.9	0.7	18.9	1.9	5.2×10^{1}
Bi-210m		0.3	8.11	3×10^{-2}	0.811	2.1×10^{-5}	5.7×10^{-4}
Bi-210		0.6	16.2	0.5	13.5	4.6×10^{3}	1.2×10^{5}
Bi-212		0.3	8.11	0.3	8.11	5.4×10^{5}	1.5×10^{7}
Bk-247	Berkelium(97)	2	54.1	2×10^{-4}	5.41×10^{-3}	3.8×10^{-2}	1.0
Bk-249		40	1080	8×10^{-2}	2.16	6.1×10^{1}	1.6×10^{3}
Br-76	Bromine(35)	0.3	8.11	0.3	8.11	9.4×10^{4}	2.5×10^{6}
Br-77		3	81.1	3	81.1	2.6×10^{4}	7.1×10^{5}
Br-82		0.4	10.8	0.4	10.8	4.0×10^{4}	1.1×10^{6}
C–11	Carbon(6)	1	27	0.5	13.5	3.1×10^{7}	8.4×10^{8}
C-14		40	1080	2	54.1	1.6×10^{-1}	4.5

Symbol of radionuclide	Element and atomic number	A_1 (TBq)	A_1 (Ci)	A_2 (TBq)	A_2 (Ci)	Specific activity	
						(TBq/g)	(Ci/g)
Ca-41	Calcium(20)	40	1080	40	1080	3.1×10^{-3}	8.5×10^{-2}
Ca-45		40	1080	0.9	24.3	6.6×10^{2}	1.8×10^{4}
Ca-47		0.9	24.3	0.5	13.5	2.3×10^{4}	6.1×10^{5}
Cd-109	Cadmium(48)	40	1080	1	27.0	9.6×10^{1}	2.6×10^{3}
Cd-113m		20	541	9×10^{-2}	2.43	8.3×10^{4}	2.2×10^{2}
Cd-115m		0.3	8.11	0.3	8.11	9.4×10^{2}	2.5×10^{4}
Cd-115		4	108	0.5	13.5	1.9×10^{4}	5.1×10^{5}
Ce-139	Cerium(58)	6	162	6	162	2.5×10^{26}	$.8\times10^{3}$
Ce-141		10	270	0.5	13.5	1.1×10^{3}	2.8×10^{4}
Ce-143		0.6	16.2	0.5	13.5	2.5×10^{4}	6.6×10^{5}
Ce-144		0.2	5.41	0.2	5.41	1.2×10^{2}	3.2×10^{3}
Cf-248	Californium (98)	30	811	3×10^{-3}	8.11×10^{-2}	5.8×10^{1}	1.6×10^{3}
Cf-249		2	54.1	2×10^{-4}	5.41×10^{-3}	1.5×10^{-1}	4.1
Cf-250		5	135	5×10^{-4}	1.35×10^{-2}	4.0	1.1×10^{2}
Cf-251		2	54.1	2×10^{-4}	5.41×10^{-3}	5.9×10^{-2}	1.6
Cf-252		0.1	2.70	1×10^{-3}	2.70×10^{-2}	2.0×10^{1}	5.4×10^{2}
Cf-253		40	1080	6×10^{-2}	1.62	1.1×10^{3}	2.9×10^{4}
Cf-254		3×10^{-3}	8.11×10^{-2}	6×10^{-4}	1.62×10^{-2}	3.1×10^{2}	8.5×10^{3}
Cl-36	Chlorine (17)	20	541	0.5	13.5	1.2×10^{-3}	3.3×10^{-2}
Cl-38		0.2	5.41	0.2	5.41	4.9×10^{6}	1.3×10^{8}
Cm-240	Curium(96)	40	1080	2×10^{-2}	0.541	7.5×10^{2}	2.0×10^{4}
Cm-241		2	54.1	0.9	24.3	6.1×10^{2}	1.7×10^{4}
Cm-242		40	1080	1×10^{-2}	0.270	1.2×10^{2}	3.3×10^{3}
Cm-243		3	81.1	3×10^{-4}	8.11×10^{-3}	1.9	5.2×10^{1}
Cm-244		4	108	4×10^{-4}	1.08×10^{-2}	3.0	8.1×10^{5}
Cm-245		2	54.1	2×10^{-4}	5.41×10^{-3}	6.4×10^{-3}	1.7×10^{-1}
Cm-246		2	54.1	2×10^{-4}	5.41×10^{-3}	1.1×10^{-2}	3.1×10^{-1}
Cm-247		2	54.1	2×10^{-4}	5.41×10^{-3}	3.4×10^{-6}	9.3×10^{-5}
Cm-248		4×10^{-2}	1.08	5×10^{-5}	1.35×10^{-3}	1.6×10^{-4}	4.2×10^{-3}
Co-55	Cobalt(27)	0.5	13.5	0.5	13.5	1.1×10^{5}	3.1×10^{6}
Co-56		0.3	8.11	0.3	8.11	1.1×10^{3}	3.0×10^{4}
Co-57		8	216	8	216	3.1×10^{2}	8.4×10^{3}
Co-58m		40	1080	40	1080	2.2×10^{5}	5.9×10^{6}
Co-58		1	27.0	1	27.0	1.2×10^{3}	3.2×10^{4}
Co-60		0.4	10.8	0.4	10.8	4.2×10^{1}	1.1×10^{3}
Cr-51	Chromium(24)	30	811	30	811	3.4×10^{3}	9.2×10^{4}
Cs-129	Cesium(55)	4	108	4	108	2.8×10^{4}	7.6×10^{5}
Cs-131		40	1080	40	1080	3.8×10^{3}	1.0×10^{5}
Cs-132		1	27.0	1	27.0	5.7×10^{3}	1.5×10^{5}
Cs-134m		40	1080	9	243	3.0×10^{5}	8.0×10^{6}
Cs-134		0.6	16.2	0.5	13.5	4.8×10^{1}	1.3×10^{3}
Cs-135		40	1080	0.9	24.3	4.3×10^{-5}	1.2×10^{-3}
Cs-136		0.5	13.5	0.5	13.5	2.7×10^{3}	7.3×10^{4}
Cs-137		2	54.1	0.5	13.5	3.2	8.7×10^{1}
Cu-64	Copper(29)	5	135	0.9	24.3	1.4×10^{5}	3.9×10^{6}
Cu-67		9	243	0.9	24.3	2.8×10^{4}	7.6×10^{5}

Dy-159	Dysprosium(66)	20	541	20	541	2.1×10^{2}	5.7×10^{3}
Dy-165		0.6	16.2	0.5	13.5	3.0×10^{5}	8.2×10^{6}
Dy-166		0.3	8.11	0.3	8.11	8.6×10^{3}	2.3×10^{5}
Er-169	Erbium(68)	40	1080	0.9	24.3	3.1×10^{3}	8.3×10^{4}
Er-171		0.6	16.2	0.5	13.5	9.0×10^{4}	2.4×10^{6}
Es-253	Einsteinium(99)[a]	200	5400	2.1×10^{-2}	5.4×100^{-1}		
Es-254		30	811	3×10^{-3}	8.11×10^{-2}		
Es-254m		0.6	16.2	0.4	10.8		
Es-255							
Eu-147	Europium(63)	2	54.1	2	54.1	1.4×10^{3}	3.7×10^{4}
Eu-148		0.5	13.5	0.5	13.5	6.0×10^{2}	1.6×10^{4}
Eu-149		20	541	20	541	3.5×10^{2}	9.4×10^{3}
Eu-150		0.7	18.9	0.7	18.9	6.1×10^{4}	1.6×10^{6}
Eu-152m		0.6	16.2	0.5	13.5	8.2×10^{4}	2.2×10^{6}
Eu-152		0.9	24.3	0.9	24.3	6.5	1.8×10^{2}
Eu-154		0.8	21.6	0.5	13.5	9.8	2.6×10^{2}
Eu-155		20	541	2	54.1	1.8×10^{1}	4.9×10^{2}
Eu-156		0.6	16.2	0.5	13.5	2.0×10^{3}	5.5×10^{4}
F–18	Fluorine(9)	1	27.0	0.5	13.5	3.5×10^{6}	9.5×10^{7}
Fe-52	Iron(26)	0.2	5.41	0.2	5.41	2.7×10^{5}	7.3×10^{6}
Fe-55		40	1080	40	1080	8.8×10^{1}	2.4×10^{3}
Fe-59		0.8	21.6	0.8	21.6	1.8×10^{3}	5.0×10^{4}
Fe-60		40	1080	0.2	5.41	7.4×10^{-4}	2.0×10^{-2}
Fm-255	Fermium(100)[b]	40	1080	0.8	21.6		
Fm-257		10	270	8×10^{-3}	21.6×10^{-1}		
Ga-67	Gallium(31)	6	162	6	162	2.2×10^{4}	6.0×10^{5}
Ga-68		0.3	8.11	0.3	8.11	1.5×10^{6}	4.1×10^{7}
Ga-72		0.4	10.8	0.4	10.8	1.1×10^{5}	3.1×10^{6}
Gd-146	Gadolinium(64)	0.4	10.8	0.4	10.8	6.9×10^{2}	1.9×10^{4}
Gd-148		3	81.1	3×10^{-4}	8.11×10^{-3}	1.2	3.2×10^{1}
Gd-153		10	270	5	135	1.3×10^{2}	3.5×10^{3}
Gd-159		4	108	0.5	13.5	3.9×10^{4}	1.1×10^{6}
Ge-68	Germanium(32)	0.3	8.11	0.3	8.11	2.6×10^{2}	7.1×10^{3}
Ge-71		40	1080	40	1080	5.8×10^{3}	1.6×10^{5}
Ge-77		0.3	8.11	0.3	8.11	1.3×10^{5}	3.6×10^{6}
H-3	Hydrogen(1)SeeT-Tritium						
Hf-172	Hafnium(72)	0.5	13.5	0.3	8.11	4.1×10^{1}	1.1×10^{3}
Hf-175		3	81.1	3	81.1	3.9×10^{2}	1.1×10^{4}
Hf-181		2	54.1	0.9	24.3	6.3×10^{2}	1.7×10^{4}
Hf-182		4	108	3×10^{-2}	0.811	8.1×10^{-6}	2.2×10^{-4}
Hg-194	Mercury(80)	1	27.0	1	27.0	1.3×10^{-1}	3.5
Hg-195m		5	135	5	135	1.5×10^{4}	4.0×10^{5}
Hg-197m		10	270	0.9	24.3	2.5×10^{4}	6.7×10^{5}
Hg-197		10	270	10	270	9.2×10^{3}	2.5×10^{5}
Hg-203		4	108	0.9	24.3	5.1×10^{2}	1.4×10^{4}
Ho-163	Holmium(67)	40	1080	40	1080	2.7	7.6×10^{1}
Ho-166m		0.6	16.2	0.3	8.11	6.6×10^{-2}	1.8
Ho-166		0.3	8.11	0.3	8.11	2.6×10^{4}	7.0×10^{5}
I-123	Iodine(53)	6	162	6	162	7.1×10^{4}	1.9×10^{6}
I-124		0.9	24.3	0.9	24.3	9.3×10^{3}	2.5×10^{5}

Symbol of radionuclide	Element and atomic number	A_1 (TBq)	A_1 (Ci)	A_2 (TBq)	A_2 (Ci)	Specific activity	
						(TBq/g)	(Ci/g)
I-125		20	541	2	54.1	6.4×10^{2}	1.7×10^{4}
I-126		2	54.1	0.9	24.3	2.9×10^{3}	8.0×10^{4}
I-129		Unlimited	Unlimited	Unlimited	Unlimited	6.5×10^{-6}	1.8×10^{-4}
I-131		3	81.1	0.5	13.5	4.6×10^{3}	1.2×10^{5}
I-132		0.4	10.8	0.4	10.8	3.8×10^{5}	1.0×10^{7}
I-133		0.6	16.2	0.5	13.5	4.2×10^{4}	1.1×10^{6}
I-134		0.3	8.11	0.3	8.11	9.9×10^{5}	2.7×10^{7}
I-135		0.6	16.2	0.5	13.5	1.3×10^{5}	3.5×10^{6}
In-111	Indium(49)	2	54.1	2	54.1	1.5×10^{4}	4.2×10^{5}
In-113m		4	108	4	108	6.2×10^{5}	1.7×10^{7}
In-114m		0.3	8.11	0.3	8.11	8.6×10^{2}	2.3×10^{4}
In-115m		6	162	0.9	24.3	2.2×10^{5}	6.1×10^{6}
Ir-189	Iridium(77)	10	270	10	270	1.9×10^{3}	5.2×10^{4}
Ir-190		0.7	18.9	0.7	18.9	2.3×10^{3}	6.2×10^{4}
Ir-192		1	27.0	0.5	13.5	3.4×10^{2}	9.2×10^{3}
Ir-193m		10	270	10	270	2.4×10^{3}	6.4×10^{4}
Ir-194		0.2	5.41	0.2	5.41	3.1×10^{4}	8.4×10^{5}
K-40	Potassium(19)	0.6	16.2	0.6	16.2	2.4×10^{-7}	6.4×10^{-6}
K-42		0.2	5.41	0.2	5.41	2.2×10^{5}	6.0×10^{6}
K-43		1.0	27.0	0.5	13.5	1.2×10^{5}	3.3×10^{6}
Kr-81	Krypton(36)	40	1080	40	1080	7.8×10^{-4}	2.1×10^{-2}
Kr-85m		6	162	6	162	3.0×10^{5}	8.2×10^{6}
Kr-85		20	541	10	270	1.5×10^{1}	3.9×10^{2}
Kr-87		0.2	5.41	0.2	5.41	1.0×10^{6}	2.8×10^{7}
La-137	Lanthanum(57)	40	1080	2	54.1	1.6×10^{-3}	4.4×10^{-2}
La-140		0.4	10.8	0.4	10.8	2.1×10^{4}	5.6×10^{5}
Lu-172	Lutetium(71)	0.5	13.5	0.5	13.5	4.2×10^{3}	1.1×10^{5}
Lu-173		8	216	8	216	5.6×10^{1}	1.5×10^{3}
Lu-174m		20	541	8	216	2.0×10^{2}	5.3×10^{3}
Lu-74		8	216	4	108	2.3×10^{1}	6.2×10^{2}
Lu-177		30	811	0.9	24.3	4.1×10^{3}	1.1×10^{5}
MFP		(see §173.433)		(see §173.433)			
Mg-28	Magnesium(12)	0.2	5.41	0.2	5.41	2.0×10^{5}	5.4×10^{6}
Mn-52	Manganese(25)	0.3	8.11	0.3	8.11	1.6×10^{4}	4.4×10^{5}
Mn-53		Unlimited	Unlimited	Unlimited	Unlimited	6.8×10^{-5}	1.8×10^{-3}
Mn-54		1	27.0	1	27.0	2.9×10^{2}	7.7×10^{3}
Mn-56		0.2	5.41	0.2	5.41	8.0×10^{5}	2.2×10^{7}
Mo-93	Molybdenum(42)	40	1080	7	189	4.1×10^{-2}	1.1
Mo-99		0.6	16.2	0.5	13.5[c]	1.8×10^{4}	4.8×10^{5}
N-13	Nitrogen(7)	0.6	16.2	0.5	13.5	5.4×10^{7}	1.5×10^{9}
Na-22	Sodium(11)	0.5	13.5	0.5	13.5	2.3×10^{2}	6.3×10^{3}
Na-24		0.2	5.41	0.2	5.41	3.2×10^{5}	8.7×10^{6}
Nb-92m	Niobium(41)	0.7	18.9	0.7	18.9	5.2×10^{3}	1.4×10^{5}
Nb-93m		40	1080	6	162	8.8	2.4×10^{2}
Nb-94		0.6	16.2	0.6	16.2	6.9×10^{-3}	1.9×10^{-1}
Nb-95		1	27.0	1	27.0	1.5×10^{3}	3.9×10^{4}

Nb-97		0.6	16.2	0.5	13.5	9.9×10^{5}	2.7×10^{7}
Nd-147	Neodymium(60)	4	108	0.5	13.5	3.0×10^{3}	8.1×10^{4}
Nd-149		0.6	16.2	0.5	13.5	4.5×10^{5}	1.2×10^{7}
Ni-59	Nickel(28)	40	1080	40	1080	3.0×10^{-3}	8.0×10^{-2}
Ni-63		40	1080	30	811	2.1	5.7×10^{1}
Ni-65		0.3	8.11	0.3	8.11	7.1×10^{5}	1.9×10^{7}
Np-235	Neptunium(93)	40	1080	40	1080	5.2×10^{1}	1.4×10^{3}
Np-236		7	189	1×10^{-3}	2.70×10^{-2}	4.7×10^{-4}	1.3×10^{-2}
Np-237		2	54.1	2×10^{-4}	5.41×10^{-3}	2.6×10^{-5}	7.1×10^{-4}
Np-239		6	162	0.5	13.5	8.6×10^{3}	2.3×10^{5}
Os-185	Osmium(76)	1	27.0	1	27.0	2.8×10^{2}	7.5×10^{3}
Os-191m		40	1080	40	1080	4.6×10^{4}	1.3×10^{6}
Os-191		10	270	0.9	24.3	1.6×10^{3}	4.4×10^{4}
Os-193		0.6	16.2	0.5	13.5	2.0×10^{4}	5.3×10^{5}
Os-194		0.2	5.41	0.2	5.41	1.1×10^{1}	3.1×10^{2}
P-32	Phosphorus(15)	0.3	8.11	0.3	8.11	1.1×10^{4}	2.9×10^{5}
P-33		40	1080	0.9	24.3	5.8×10^{3}	1.6×10^{5}
Pa-230	Protactinium(91)	2	54.1	0.1	2.70	1.2×10^{3}	3.3×10^{4}
Pa-231		0.6	16.2	$6\times10-5$	1.62×10^{-3}	1.7×10^{-3}	4.7×10^{-2}
Pa-233		5	135	0.9	24.3	7.7×10^{2}	2.1×10^{4}
Pb-201	Lead(82)	1	27.0	1	27.0	6.2×10^{4}	1.7×10^{6}
Pb-202		40	1080	2	54.1	1.2×10^{-4}	3.4×10^{-3}
Pb-203		3	81.1	3	81.1	1.1×10^{4}	3.0×10^{5}
Pb-205		Unlimited	Unlimited	Unlimited	Unlimited	4.5×10^{-6}	1.2×10^{-4}
Pb-210		0.6	16.2	9×10^{-3}	0.243	2.8	7.6×10^{1}
Pb-212		0.3	8.11	0.3	8.11	5.1×10^{4}	1.4×10^{6}
Pd-103	Palladium(46)	40	1080	40	1080	2.8×10^{3}	7.5×10^{4}
Pd-107		Unlimited	Unlimited	Unlimited	Unlimited	1.9×10^{-5}	5.1×10^{-4}
Pd-109		0.6	16.2	0.5	13.5	7.9×10^{4}	2.1×10^{6}
Pm-143	Promethium(61)	3	81.1	3	81.1	1.3×10^{2}	3.4×10^{3}
Pm-144		0.6	16.2	0.6	16.2	9.2×10^{1}	2.5×10^{3}
Pm-145		30	811	7	189	5.2	1.4×10^{2}
Pm-147		40	1080	0.9	24.3	3.4×10^{1}	9.3×10^{2}
Pm-148m		0.5	13.5	0.5	13.5	7.9×10^{2}	2.1×10^{4}
Pm-149		0.6	16.2	0.5	13.5	1.5×10^{4}	4.0×10^{5}
Pm-151		3	81.1	0.5	13.5	2.7×10^{4}	7.3×10^{5}
Po-208	Polonium(84)	40	1080	2×10^{-2}	0.541	2.2×10^{1}	5.9×10^{2}
Po-209		40	1080	2×10^{-2}	0.541	6.2×10^{-1}	1.7×10^{1}
Po-210		40	1080	2×10^{-2}	0.541	1.7×10^{2}	4.5×10^{3}
Pr-142	Praseodymium (59)	0.2	5.41	0.2	5.41	4.3×10^{4}	1.2×10^{6}
Pr-143		4	108	0.5	13.5	2.5×10^{3}	6.7×10^{4}
Pt-188	Platinum(78)	0.6	16.2	0.6	16.2	2.5×10^{3}	6.8×10^{4}
Pt-191		3	81.1	3	81.1	8.7×10^{3}	2.4×10^{5}
Pt-193m		40	1080	9	243	5.8×10^{3}	1.6×10^{5}
Pt-193		40	1080	40	1080	1.4	3.7×10^{1}
Pt-195m		10	270	2	54.1	6.2×10^{3}	1.7×10^{5}
Pt-197m		10	270	0.9	24.3	3.7×10^{5}	1.0×10^{7}
Pt-197		20	541	0.5	13.5	3.2×10^{4}	8.7×10^{5}
Pu-236	Plutonium(94)	7	189	7×10^{-4}	1.89×10^{-2}	2.0×10^{1}	5.3×10^{2}
Pu-237		20	541	20	541	4.5×10^{2}	1.2×10^{4}

Symbol of radionuclide	Element and atomic number	A_1 (TBq)	A_1 (Ci)	A_2 (TBq)	A_2 (Ci)	Specific activity	
						(TBq/g)	(Ci/g)
Pu-238		2	54.1	2×10^{-4}	5.41×10^{-3}	6.3×10^{-1}	1.7×10^{1}
Pu-239		2	54.1	2×10^{-4}	5.41×10^{-3}	2.3×10^{-3}	6.2×10^{-2}
Pu-240		2	54.1	2×10^{-4}	5.41×10^{-3}	8.4×10^{-3}	2.3×10^{-1}
Pu-241		40	1080	1×10^{-2}	0.270	3.8	1.0×10^{2}
Pu-242		2	54.1	2×10^{-4}	5.41×10^{-3}	1.5×10^{-4}	3.9×10^{-3}
Pu-244		0.3	8.11	2×10^{-4}	5.41×10^{-3}	6.7×10^{-7}	1.8×10^{-5}
Ra-223	Radium(88)	0.6	16.2	3×10^{-2}	0.811	1.9×10^{3}	5.1×10^{4}
Ra-224		0.3	8.11	6×10^{-2}	1.62	5.9×10^{3}	1.6×10^{5}
Ra-225		0.6	16.2	2×10^{-2}	0.541	1.5×10^{3}	3.9×10^{4}
Ra-226		0.3	8.11	2×10^{-2}	0.541	3.7×10^{-2}	1.0
Ra-228		0.6	16.2	4×10^{-2}	1.08	1.0×10^{1}	2.7×10^{2}
Rb-81	Rubidium(37)	2	54.1	0.9	24.3	3.1×10^{5}	8.4×10^{6}
Rb-83		2	54.1	2	54.1	6.8×10^{2}	1.8×10^{4}
Rb-84		1	27.0	0.9	24.3	1.8×10^{3}	4.7×10^{4}
Rb-86		0.3	8.11	0.3	8.11	3.0×10^{3}	8.1×10^{4}
Rb-87		Unlimited	Unlimited	Unlimited	Unlimited	3.2×10^{-9}	8.6×10^{-8}
Rb (natural)		Unlimited	Unlimited	Unlimited	Unlimited	6.7×10^{6}	1.8×10^{8}
Re-183	Rhenium(75)	5	135	5	135	3.8×10^{2}	1.0×10^{4}
Re-184m		3	81.1	3	81.1	1.6×10^{2}	4.3×10^{3}
Re-184		1	27.0	1	27.0	6.9×10^{2}	1.9×10^{4}
Re-186		4	108	0.5	13.5	6.9×10^{3}	1.9×10^{5}
Re-187		Unlimited	Unlimited	Unlimited	Unlimited	1.4×10^{-9}	3.8×10^{-8}
Re-188		0.2	5.41	0.2	5.41	3.6×10^{4}	9.8×10^{5}
Re-189		4	108	0.5	13.5	2.5×10^{4}	6.8×10^{5}
Re (natural)		Unlimited	Unlimited	Unlimited	Unlimited	—	2.4×10^{8}
Rh-99	Rhodium(45)	2	54.1	2	54.1	3.0×10^{3}	8.2×10^{4}
Rh-101		4	108	4	108	4.1×10^{1}	1.1×10^{3}
Rh-102m		2	54.1	0.9	24.3	2.3×10^{2}	6.2×10^{3}
Rh-102		0.5	13.5	0.5	13.5	4.5×10^{1}	1.2×10^{3}
Rh-103m		40	1080	40	1080	1.2×10^{6}	3.3×10^{7}
Rh-105		10	270	0.9	24.3	3.1×10^{4}	8.4×10^{5}
Rn-222	Radon(86)	0.2	5.41	4×10^{-3}	0.108	5.7×10^{3}	1.5×10^{5}
Ru-97	Ruthenium(44)	4	108	4	108	1.7×10^{4}	4.6×10^{5}
Ru-103		2	54.1	0.9	24.3	1.2×10^{3}	3.2×10^{4}
Ru-105		0.6	16.2	0.5	13.5	2.5×10^{5}	6.7×10^{6}
Ru-106		0.2	5.41	0.2	5.41	1.2×10^{2}	3.3×10^{3}
S-35	Sulfur(16)	40	1080	2	54.1	1.6×10^{3}	4.3×10^{4}
Sb-122	Antimony(51)	0.3	8.11	0.3	8.11	1.5×10^{4}	4.0×10^{5}
Sb-124		0.6	16.2	0.5	13.5	6.5×10^{2}	1.7×10^{4}
Sb-125		2	54.1	0.9	24.3	3.9×10^{1}	1.0×10^{3}
Sb-126		0.4	10.8	0.4	10.8	3.1×10^{3}	8.4×10^{4}
Sc-44	Scandium(21)	0.5	13.5	0.5	13.5	6.7×10^{5}	1.8×10^{7}
Sc-46		0.5	13.5	0.5	13.5	1.3×10^{3}	3.4×10^{4}
Sc-47		9	243	0.9	24.3	3.1×10^{4}	8.3×10^{5}
Sc-48		0.3	8.11	0.3	8.11	5.5×10^{4}	1.5×10^{6}
Se-75	Selenium(34)	3	81.1	3	81.1	5.4×10^{2}	1.5×10^{4}

Se-79		40	1080	2	54.1	2.6×10^{-3}	7.0×10^{-2}
Si-31	Silicon(14)	0.6	16.2	0.5	13.5	1.4×10^{6}	3.9×10^{7}
Si-32		40	10800	0.2	5.41	3.9	1.1×10^{2}
Sm-145	Samarium(62)	20	541	20	541	9.8×10^{1}	2.610^{3}
Sm-147		Unlimited	Unlimited	Unlimited	Unlimited	8.510^{-10}	2.310^{-8}
Sm-151		40	1080	4	108	9.710^{-1}	2.6×10^{1}
Sm-153		4	108	0.5	13.5	1.6×10^{4}	4.4×10^{5}
Sn-113	Tin(50)	4	108	4	108	3.7×10^{2}	1.0×10^{4}
Sn-117m		6	162	2	54.1	3.0×10^{3}	8.2×10^{4}
Sn-119m		40	1080	40	1080	1.4×10^{2}	3.7×10^{3}
Sn-121m		40	1080	0.9	24.3	2.0	5.4×10^{1}
Sn-123		0.6	16.2	0.5	13.5	3.0×10^{2}	8.2×10^{3}
Sn-125		0.2	5.41	0.2	5.41	4.0×10^{3}	1.1×10^{5}
Sn-126		0.3	8.11	0.3	8.11	1.010^{-3}	2.810^{-2}
Sr-82	Strontium(38)	0.2	5.41	0.2	5.41	2.3×10^{3}	6.2×10^{4}
Sr-85m		5	135	5	135	1.2×10^{6}	3.3×10^{7}
Sr-85		2	54.1	2	54.1	8.8×10^{2}	2.4×10^{4}
Sr-87m		3	81.1	3	81.1	4.8×10^{5}	1.3×10^{7}
Sr-89		0.6	16.2	0.5	13.5	1.1×10^{3}	2.9×10^{4}
Sr-90		0.2	5.41	0.1	2.70	5.1	1.4×10^{2}
Sr-91		0.3	8.11	0.3	8.11	1.3×10^{5}	3.6×10^{6}
Sr-92		0.8	21.6	0.5	13.5	4.7×10^{5}	1.3×10^{7}
T	Tritium(1)	40	1080	40	1080	3.6×10^{2}	9.7×10^{3}
Ta-178	Tantalum(73)	1	27.0	1	27.0	4.2×10^{6}	1.1×10^{8}
Ta-179		30	811	30	811	4.1×10^{1}	1.1×10^{3}
Ta-182		0.8	21.6	0.5	13.5	2.3×10^{2}	6.2×10^{3}
Tb-157	Terbium(65)	40	1080	10	270	5.610^{-1}	1.5×10^{1}
Tb-158		1	27.0	0.7	18.9	5.610^{-1}	1.5×10^{1}
Tb-160		0.9	24.3	0.5	13.5	4.2×10^{2}	1.1×10^{4}
Tc-95m	Technetium(43)	2	54.1	2	54.1	8.3×10^{2}	2.2×10^{4}
Tc-96m		0.4	10.8	0.4	10.8	1.4×10^{6}	3.8×10^{7}
Tc-96		0.4	10.8	0.4	10.8	1.2×10^{4}	3.2×10^{5}
Tc-97m		40	1080	40	1080	5.6×10^{2}	1.5×10^{4}
Tc-97		Unlimited	Unlimited	Unlimited	Unlimited	5.2×10^{-5}	1.4×10^{-3}
Tc-98		0.7	18.9	0.7	18.9	3.2×10^{-5}	8.7×10^{-4}
Tc-99m		8	216	8	216	1.9×10^{5}	5.3×10^{6}
Tc-99		40	1080	0.9	24.3	6.3×10^{-4}	1.7×10^{-2}
Te-118	Tellurium(52)	0.2	5.41	0.2	5.41	6.8×10^{3}	1.8×10^{5}
Te-121m		5	135	5	135	2.6×10^{2}	7.0×10^{3}
Te-121		2	54.1	2	54.1	2.4×10^{3}	6.4×10^{4}
Te-123m		7	189	7	189	3.3×10^{2}	8.9×10^{3}
Te-125m		30	811	9	243	6.7×10^{2}	1.8×10^{4}
Te-127m		20	541	0.5	13.5	3.5×10^{2}	9.4×10^{3}
Te-127		20	541	0.5	13.5	9.8×10^{4}	2.6×10^{6}
Te-129m		0.6	16.2	0.5	13.5	1.1×10^{3}	3.0×10^{4}
Te-129		0.6	16.2	0.5	13.5	7.7×10^{5}	2.1×10^{7}
Te-131m		0.7	18.9	0.5	13.5	3.0×10^{4}	8.0×10^{5}
Te-132		0.4	10.8	0.4	10.8	1.1×10^{4}	3.0×10^{5}
Th-227	Thorium(90)	9	243	1×10^{-2}	0.270	1.1×10^{3}	3.1×10^{4}
Th-228		0.3	8.11	4×10^{-4}	1.08×10^{-2}	3.0×10^{1}	8.2×10^{2}

Symbol of radionuclide	Element and atomic number	A_1 (TBq)	A_1 (Ci)	A_2 (TBq)	A_2 (Ci)	Specific activity	
						(TBq/g)	(Ci/g)
Th-229		0.3	8.11	3×10^{-5}	8.11×10^{-4}	7.9×10^{-3}	2.1×10^{-1}
Th-230		2	54.1	2×10^{-4}	5.41×10^{-3}	7.6×10^{-4}	2.1×10^{-2}
Th-231		40	1080	0.9	24.3	2.0×10^{4}	5.3×10^{5}
Th-232		Unlimited	Unlimited	Unlimited	Unlimited	4.0×10^{-9}	1.1×10^{-7}
Th-234		0.2	5.41	0.2	5.41	8.6×10^{2}	2.3×10^{4}
Th (natural)		Unlimited	Unlimited	Unlimited	Unlimited	8.1×10^{-9}	2.2×10^{-7}
Ti-44	Titanium(22)	0.5	13.5	0.2	5.41	6.4	1.7×10^{2}
Tl-200	Thallium(81.1)	0.8	21.6	0.8	21.6	2.2×10^{4}	6.0×10^{5}
Tl-201		10	270	10	270	7.9×10^{3}	2.1×10^{5}
Tl-202		2	54.1	2	54.1	2.0×10^{3}	5.3×10^{4}
Tl-204		4	108	0.5	13.5	1.7×10^{1}	4.6×10^{2}
Tm-167	Thulium(69)	7	189	7	189	3.1×10^{3}	8.5×10^{4}
Tm-168		0.8	21.6	0.8	21.6	3.1×10^{2}	8.3×10^{3}
Tm-170		4	108	0.5	13.5	2.2×10^{2}	6.0×10^{3}
Tm-171		40	1080	10	270	4.0×10^{1}	1.1×10^{3}
U-230	Uranium(92)	40	1080	1×10^{-2}	0.270	1.0×10^{3}	2.7×10^{4}
U-232		3	81.1	3×10^{-4}	8.11×10^{-3}	8.3×10^{-1}	2.2×10^{1}
U-233		10	270	1×10^{-3}	2.70×10^{-2}	3.6×10^{-4}	9.7×10^{-3}
U-234		10	270	1×10^{-3}	2.70×10^{-2}	2.3×10^{-4}	6.2×10^{-3}
U-235		Unlimited	Unlimited	Unlimited	Unlimited	8.0×10^{-8}	2.2×10^{-6}
U-236		10	270	1×10^{-3}	2.70×10^{-2}	2.4×10^{-6}	6.5×10^{-5}
U-238		Unlimited	Unlimited	Unlimited	Unlimited	1.2×10^{-8}	3.4×10^{-7}
U (natural)		Unlimited	Unlimited	Unlimited	Unlimited	2.6×10^{-8}	7.1×10^{-7}
U (enriched 5% or less)		Unlimited	Unlimited	Unlimited	Unlimited	———	(see § 173.434)
U (enriched more than 5%).		10	270	1×10^{-3}	2.70×10^{-2}	———	(see § 173.434)
U (depleted)		Unlimited	Unlimited	Unlimited	Unlimited	———	(see § 173.434)
V-48	Vanadium(23)	0.3	8.11	0.3	8.11	6.3×10^{3}	1.7×10^{5}
V-49		40	1080	40	1080	3.0×10^{2}	8.1×10^{3}
W-178	Tungsten(74)	1	27.0	1	27.0	1.3×10^{-3}	3.4×10^{4}
W-181		30	811	30	811	2.2×10^{2}	6.0×10^{3}
W-185		40	1080	0.9	24.3	3.5×10^{2}	9.4×10^{3}
W-187		2	54.1	0.5	13.5	2.6×10^{4}	7.0×10^{5}
W-188		0.2	5.41	0.2	5.41	3.7×10^{2}	1.0×10^{4}
Xe-122	Xenon(54)	0.2	5.41	0.2	5.41	4.8×10^{4}	1.3×10^{6}
Xe-123		0.2	5.41	0.2	5.41	4.4×10^{5}	1.2×10^{7}
Xe-127		4	108	4	108	1.0×10^{3}	2.8×10^{4}
Xe-131m		40	1080	40	1080	3.1×10^{3}	8.4×10^{4}
Xe-133		20	541	20	541	6.9×10^{3}	1.9×10^{5}
Xe-135		4	108	4	108	9.5×10^{4}	2.6×10^{6}
Y-87	Yttrium(39)	2	54.1	2	54.1	1.7×10^{4}	4.5×10^{5}
Y-88		0.4	10.8	0.4	10.8	5.2×10^{2}	1.4×10^{4}
Y-90		0.2	5.41	0.2	5.41	2.0×10^{4}	5.4×10^{5}
Y-91m		2	54.1	2	54.1	1.5×10^{6}	4.2×10^{7}
Y-91		0.3	8.11	0.3	8.11	9.1×10^{2}	2.5×10^{4}
Y-92		0.2	5.41	0.2	5.41	3.6×10^{5}	9.6×10^{6}

Y-93		0.2	5.41	0.2	5.41	1.2×10^{5}	3.3×10^{6}
Yb-169	Ytterbium(70)	3	81.1	3	81.1	8.9×10^{2}	2.4×10^{4}
Yb-175		30	811	0.9	24.3	6.6×10^{3}	1.8×10^{5}
Zn-65	Zinc(30)	2	54.1	2	54.1	3.0×10^{2}	8.2×10^{3}
Zn-69m		2	54.1	0.5	13.5	1.2×10^{5}	3.3×10^{6}
Zn-69		4	108	0.5	13.5	1.8×10^{6}	4.9×10^{7}
Zr-88	Zirconium(40)	3	81.1	3	81.1	6.6×10^{2}	1.8×10^{4}
Zr-93		40	1080	0.2	5.41	9.3×10^{-5}	2.5×10^{-3}
Zr-95		1	27.0	0.9	24.3	7.9×10^{2}	2.1×10^{4}
Zr-97		0.3	8.11	0.3	8.11	7.1×10^{4}	1.9×10^{6}

[a] International shipments of Einsteinium require multilateral approval of A_1 and A_2 values.
[b] International shipments of Fermium require multilateral approval of A_1 and A_2 values.
[c] 20 Ci for Mo^{99} for domestic use.
MFP: For mixed fission products, use formula for mixtures or Table 10 in § 173.433.
Note: The activity per gram of radionuclide quantities are technical information that might not provide a direct relationship between the activity and total mass of material contained in a package.

[Amdt. 173–244, 60 FR 50307, Sept. 28, 1995, as amended by Amdt. 173–244, 61 FR 20752, May 8, 1996; Amdt. 173–253, 61 FR 27175, May 30, 1996]

§ 173.441 Radiation level limitations.

(a) Except as provided in paragraph (b) of this section, each package of Class 7 (radioactive) materials offered for transportation must be designed and prepared for shipment, so that under conditions normally incident to transportation, the radiation level does not exceed 2 mSv/hour (200 mrem/hour) at any point on the external surface of the package, and the transport index does not exceed 10.

(b) A package which exceeds the radiation level limits specified in paragraph (a) of this section must be transported by exclusive use shipment, and the radiation levels for such shipment may not exceed the following during transportation:

(1) 2 mSv/h (200 mrem/h) on the external surface of the package unless the following conditions are met, in which case the limit is 10 mSv/h (1000 mrem/h):

(i) The shipment is made in a closed transport vehicle;

(ii) The package is secured within the vehicle so that its position remains fixed during transportation; and

(iii) There are no loading or unloading operations between the beginning and end of the transportation;

(2) 2 mSv/h (200 mrem/h) at any point on the outer surfaces of the vehicle, including the top and underside of the vehicle; or in the case of a flat-bed style vehicle, at any point on the vertical planes projected from the outer edges of the vehicle, on the upper surface of the load or enclosure if used, and on the lower external surface of the vehicle;

(3) 0.1 mSv/h (10 mrem/h) at any point 2 meters (6.6 feet) from the outer lateral surfaces of the vehicle (excluding the top and underside of the vehicle); or in the case of a flat-bed style vehicle, at any point 2 meters (6.6 feet) from the vertical planes projected by the outer edges of the vehicle (excluding the top and underside of the vehicle); and

(4) 0.02 mSv/h (2 mrem/h) in any normally occupied space, except that this provision does not apply to private carriers if exposed personnel under their control wear radiation dosimetry devices as part of a radiation protection program that satisfies the requirements of subpart I of part 172 of this subchapter.

(c) For shipments made under the provisions of paragraph (b) of this section, the offeror shall provide specific written instructions for maintenance of the exclusive use shipment controls to the carrier. The instructions must be included with the shipping paper information. The instructions must be sufficient so that, when followed, they will cause the carrier to avoid actions that will unnecessarily delay delivery or unnecessarily result in increased radiation levels or radiation exposures to transport workers or members of the general public.

(d) Packages exceeding the radiation level or transport index prescribed in paragraph (a) of this section may not be transported by aircraft.

§ 173.442 Thermal limitations.

A package of Class 7 (radioactive) material must be designed, constructed, and loaded so that—

(a) The heat generated within the package by the radioactive contents will not, during conditions normally incident to transport, affect the integrity of the package; and

(b) The temperature of the accessible external surfaces of the loaded package will not, assuming still air in the shade at an ambient temperature of 38°C (100°F), exceed either—

(1) 50°C (122°F) in other than an exclusive use shipment; or

(2) 85°C (185°F) in an exclusive use shipment.

§ 173.443 Contamination control.

(a) The level of non-fixed (removable) radioactive contamination on the external surfaces of each package offered for transport must be kept as low as reasonably achievable. The level of non-fixed radioactive contamination may not exceed the limits set forth in Table 11 and must be determined by either:

(1) Wiping an area of 300 square centimeters of the surface concerned with an absorbent material, using moderate pressure, and measuring the activity on the wiping material. Sufficient measurements must be taken in the most appropriate locations to yield a representative assessment of the non-

fixed contamination levels. The amount of radioactivity measured on any single wiping material, when averaged over the surface wiped, may not exceed the limits set forth in Table 11 at any time during transport; or

(2) Using other methods of assessment of equal or greater efficiency, in which case the efficiency of the method used must be taken into account and the non-fixed contamination on the external surfaces of the package may not exceed ten times the limits set forth in Table 11, as follows:

TABLE 11.—NON-FIXED EXTERNAL RADIOACTIVE CONTAMINATION-WIPE LIMITS

Contaminant	Maximum permissible limits		
	Bq/cm²	uCi/cm²	dpm/cm²
Beta and gamma emitters and low toxicity alpha emitters	0.4	10^{-5}	22
All other alpha emitting radionuclides	0.04	10^{-6}	2.2

(b) Except as provided in paragraph (d) of this section, in the case of packages transported as exclusive use shipments by rail or public highway only, the removable (non-fixed) radioactive contamination on any package at any time during transport may not exceed ten times the levels prescribed in paragraph (a) of this section. The levels at the beginning of transport may not exceed the levels prescribed in paragraph (a) of this section.

(c) Except as provided in paragraph (d) of this section, each transport vehicle used for transporting Class 7 (radioactive) materials as an exclusive use shipment that utilizes the provisions of paragraph (b) of this section must be surveyed with appropriate radiation detection instruments after each use. A vehicle may not be returned to service until the radiation dose rate at each accessible surface is 0.005 mSv per hour (0.5 mrem per hour) or less, and there is no significant removable (non-fixed) radioactive surface contamination as specified in paragraph (a) of this section.

(d) Paragraphs (b) and (c) of this section do not apply to any closed transport vehicle used solely for the transportation by highway or rail of Class 7 (radioactive) material packages with contamination levels that do not exceed 10 times the levels prescribed in paragraph (a) of this section if—

(1) A survey of the interior surfaces of the empty vehicle shows that the radiation dose rate at any point does not exceed 0.1 mSv per hour (10 mrem per hour) at the surface or 0.02 mSv per hour (2 mrem per hour) at 1 meter (3.3 feet) from the surface;

(2) Each vehicle is stenciled with the words ''For Radioactive Materials Use Only'' in letters at least 76 millimeters (3 inches) high in a conspicuous place on both sides of the exterior of the vehicle; and

(3) Each vehicle is kept closed except for loading or unloading.

[Amdt. 173–244, 60 FR 50307, Sept. 28, 1995, as amended by Amdt. 173–244, 61 FR 20753, May 8, 1996]

§ 173.447 Storage incident to transportation—general requirements.

The following requirements apply to temporary storage during the course of transportation but not to Nuclear Regulatory Commission or Agreement State-licensed facilities or U.S. Government-owned or contracted facilities.

(a) The number of packages bearing RADIOACTIVE YELLOW-II or RADIOACTIVE YELLOW-III labels stored in any one storage area, such as a transit area, terminal building, storeroom, waterfront pier, or assembly yard, must be limited so that the sum of the transport indexes in any individual group of packages does not exceed 50. Groups of these packages must be stored so as to maintain a spacing of at least 6 meters (20 feet) from other groups of packages containing Class 7 (radioactive) materials.

(b) Mixing of different kinds of Class 7 (radioactive) materials packages that include fissile materials packages is authorized only in accordance with § 173.459.

§ 173.448 General transportation requirements.

(a) Each shipment of Class 7 (radioactive) materials must be secured to prevent shifting during normal transportation conditions.

(b) Except as provided in §§ 174.81, 176.83, and 177.848 of this subchapter, or as otherwise required by the competent

authority in the applicable certificate, a package of Class 7 (radioactive) materials may be carried among packaged general cargo without special stowage provisions, if—

(1) The heat output in watts does not exceed 0.1 times the minimum package dimension in centimeters; or

(2) The average surface heat flux of the package does not exceed 15 watts per square meter and the immediately surrounding cargo is not in sacks or bags or otherwise in a form that would seriously impede air circulation for heat removal.

(c) Packages bearing labels prescribed in § 172.403 of this subchapter may not be carried in compartments occupied by passengers, except in those compartments exclusively reserved for couriers accompanying those packages.

(d) Mixing of different kinds of packages that include fissile packages is authorized only in accordance with § 173.459.

(e) No person shall offer for transportation or transport aboard a passenger-carrying aircraft any single package with a transport index greater than 3.0 or an overpack with a transport index greater than 3.0.

(f) No person shall offer for transportation or transport aboard a passenger-carrying aircraft any Class 7 (radioactive) material unless that material is intended for use in, or incident to, research, medical diagnosis or treatment.

(g) If an overpack is used to consolidate individual packages of Class 7 (radioactive) materials, the packages must comply with the packaging, marking, and labeling requirements of this subchapter, and the following:

(1) The overpack must be labeled as prescribed in § 172.403 of this subchapter, except as follows:

(i) The ''contents'' entry on the label may state ''mixed'' unless each inside package contains the same radionuclide(s);

(ii) The ''activity'' entry on the label must be determined by adding together the number of Becquerels (curies) of the Class 7 (radioactive) materials packages contained therein;

(iii) For a non-rigid overpack, the required label together with required package markings must be affixed to the overpack by means of a securely attached, durable tag. The transport index must be determined by adding together the transport indexes of the Class 7 (radioactive) materials packages contained therein; and

(iv) For a rigid overpack, the transport index must be determined by:

(A) Adding together the transport indexes of the Class 7 (radioactive) materials packages contained in the overpack; or

(B) Except for fissile Class 7 (radioactive) materials, direct measurements as prescribed in § 173.403 for transport index, taken by the person initially offering the packages contained within the overpack for shipment.

(2) The overpack must be marked as prescribed in Subpart D of Part 172 of this subchapter and § 173.25(a).

(3) The transport index of the overpack may not exceed 3.0 for passenger-carrying aircraft shipments, or 10.0 for cargo-aircraft only shipments.

§ 173.453 Fissile materials—exceptions.

The requirements of §§ 173.457 and 173.459 do not apply to:

(a) A package containing 15 grams or less of fissile radionuclides. If the material is transported in bulk, the quantity limitation applies to the conveyance.

(b) A package containing homogeneous solutions or mixtures where:

(1) The minimum ratio of the number of hydrogen atoms to the number of atoms of fissile radionuclides (H/X) is 5200;

(2) The maximum concentration of fissile radionuclides is 5 grams per liter; and

(3) The maximum mass of fissile radionuclides in the package is 500 grams, except that for a mixture in which the total mass of plutonium and uranium-233 does not exceed 1% of the mass of uranium-235, the limit is 800 grams of uranium-235. If the material is transported in bulk, the quantity limitations apply to the conveyance.

(c) A package containing uranium enriched in uranium-235 to a maximum of 1% by mass, and mixed with a total plutonium and uranium-233 content of up to 1% of the mass of uranium-235, if the fissile radionuclides are distributed

homogeneously throughout the package contents, and do not form a lattice arrangement within the package.

(d) A package containing not more than 5 grams of fissile radionuclides in any 10 liter volume, provided that the material is contained in packages that will maintain the limitation on fissile radionuclide distribution during normal conditions of transport.

(e) A package containing one kilogram or less of plutonium of which 20% or less by mass may consist of plutonium-239, plutonium-241, or any combination of those radionuclides.

(f) A package containing liquid solutions of uranyl nitrate enriched in uranium-235 to a maximum of 2% by mass, with total plutonium and uranium-233 content not exceeding 0.1% of the mass of uranium-235 with a nitrogen-to-uranium atomic ratio (N/U) of 2.

[Amdt. 173–244, 60 FR 50307, Sept. 28, 1995, as amended by Amdt. 173–248, 61 FR 18933, Apr. 29, 1996]

§173.457 Transportation of fissile material, controlled shipments—specific requirements.

Shipments of fissile material packages that have been assigned a transport index of greater than 10 for criticality control purposes in accordance with 10 CFR 71.59 must meet the requirements of this section and §173.441(a) or (b).

(a) For fissile material, controlled shipments, the offeror or carrier, as appropriate, must incorporate transportation controls which:

(1) Provide nuclear criticality safety;

(2) Protect against loading, storing, or transporting that shipment with any other fissile material; and

(3) Include in the shipping papers the description required by §172.203(d) of this subchapter.

(b) Fissile material, controlled shipments must be transported:

(1) In an exclusive use conveyance;

(2) Except for shipments by aircraft, in a conveyance with an escort having the capability, equipment, authority, and instructions to provide administrative controls necessary to assure compliance with this section;

(3) In a conveyance containing no other packages of any Class 7 (radioactive) material required to bear one of the labels prescribed in §172.403 of this subchapter. Specific arrangements must be made between the offeror and the carrier, with instructions to that effect issued with the shipping papers; or

(4) Under any other procedure approved by the Associate Administrator for Hazardous Materials Safety in accordance with Part 107 of this subchapter.

§173.459 Mixing of fissile material packages.

(a) Mixing of fissile material packages with other types of Class 7 (radioactive) materials is authorized only if the transport index of any single package does not exceed 10 and the total transport index in any conveyance or storage location does not exceed 50.

(b) Fissile packages may be shipped with an external radiation level greater than 0.1 mSv/hr (10 mrem per hour) at 1 meter (3.3 feet), and combined with other packages of the same or different designs in a fissile material, controlled shipment, under the conditions prescribed in §173.457, if:

(1) Each package in the shipment has been assigned a transport index for criticality control purposes in accordance with the 10 CFR 71.59;

(2) The nuclear criticality control transport index does not exceed 10 for any single package;

(3) The total nuclear criticality control transport index does not exceed 100 for all packages in the shipment; and

(4) Except as provided in §176.704(e) of this subchapter, the shipment is not transported by vessel.

(c) A fissile material, controlled shipment of packages may be combined with other packages of the same or different design when each package has been assigned a nuclear criticality control transport index in accordance with 10 CFR 71.59, and may be combined with other fissile packages into a fissile material, controlled shipment under the conditions prescribed in §173.457, if:

(1) The nuclear criticality control transport index which has been assigned in the package approval does not exceed 50 for any single package;

(2) The total nuclear criticality control transport index for all packages in the shipment does not exceed 100; and

(3) Except as provided in § 176.704(e) of this subchapter, the shipment is not transported by vessel.

§ 173.461 Demonstration of compliance with tests.

(a) Compliance with the test requirements in §§ 173.463 through 173.469 must be shown by any of the methods prescribed in this paragraph, or by a combination of these methods appropriate for the particular feature being evaluated:

(1) Performance of tests with prototypes or samples of the specimens representing LSA-III, special form Class 7 (radioactive) material, or packaging, in which case the contents of the packaging for the test must simulate as closely as practicable the expected range of physical properties of the radioactive contents or packaging to be tested, must be prepared as normally presented for transport. The use of non-radioactive substitute contents is encouraged provided that the results of the testing take into account the radioactive characteristics of the contents for which the package is being tested;

(2) Reference to a previous, satisfactory demonstration of compliance of a sufficiently similar nature;

(3) Performance of tests with models of appropriate scale incorporating those features that are significant with respect to the item under investigation, when engineering experience has shown results of those tests to be suitable for design purposes. When a scale model is used, the need for adjusting certain test parameters, such as the penetrator diameter or the compressive load, must be taken into account; or

(4) Calculations or reasoned evaluation, using reliable and conservative procedures and parameters.

(b) With respect to the initial conditions for the tests under §§ 173.463 through 173.469, except for the water immersion tests, compliance must be based upon the assumption that the package is in equilibrium at an ambient temperature of 38°C (100°F).

§ 173.462 Preparation of specimens for testing.

(a) Each specimen (i.e., sample, prototype or scale model) must be examined before testing to identify and record faults or damage, including:

(1) Divergence from the specifications or drawings;

(2) Defects in construction;

(3) Corrosion or other deterioration; and

(4) Distortion of features.

(b) Any deviation found under paragraph (a) of this section from the specified design must be corrected or appropriately taken into account in the subsequent evaluation.

(c) The containment system of the packaging must be clearly specified.

(d) The external features of the specimen must be clearly identified so that reference may be made to any part of it.

§ 173.465 Type A packaging tests.

(a) The packaging, with contents, must be capable of withstanding the water spray, free drop, stacking and penetration tests prescribed in this section. One prototype may be used for all tests if the requirements of paragraph (b) of this section are met.

(b) *Water spray test.* The water spray test must precede each test or test sequence prescribed in this section. The water spray test must simulate exposure to rainfall of approximately 5 centimeters (2 inches) per hour for at least one hour. The time interval between the end of the water spray test and the beginning of the next test must be such that the water has soaked in to the maximum extent without appreciable drying of the exterior of the specimen. In the absence of evidence to the contrary, this interval may be assumed to be two hours if the water spray is applied from four different directions simultaneously. However, no time interval may elapse if the water spray is applied from each of the four directions consecutively.

(c) *Free drop test.* The specimen must drop onto the target so as to suffer maximum damage to the safety features being tested, and:

(1) The height of the drop measured from the lowest point of the specimen to the upper surface of the target may

not be less than the distance specified in Table 12, for the applicable package mass. The target must be as specified in §173.465(c)(5). Table 12 is as follows:

TABLE 12.—FREE DROP DISTANCE FOR TESTING PACKAGES TO NORMAL CONDITIONS OF TRANSPORT

Packaging mass	Free drop distance	
Kilograms (pounds)	Meters	(Feet)
< Mass 5000 (11,000)	1.2	(4)
5,000 (11,000) Mass to 10,000 (22,000)	0.9	(3)
10,000 (22,000) Mass to 15,000 (33,000)	0.6	(2)
> 15,000 (33,000) Mass	0.3	(1)

(2) For packages containing fissile material, the free drop test specified in paragraph (c)(1) of this section must be preceded by a free drop from a height of 0.3 meter (1 foot) on each corner, or in the case of cylindrical packages, onto each of the quarters of each rim.

(3) For fiberboard or wood rectangular packages with a mass of 50 kilograms (110 pounds) or less, a separate specimen must be subjected to a free drop onto each corner from a height of 0.3 meter (1 foot).

(4) For cylindrical fiberboard packages with a mass of 100 kilograms (220 pounds) or less, a separate specimen must be subjected to a free drop onto each of the quarters of each rim from a height of 0.3 meter (1 foot).

(5) The target for the free drop test must be a flat, horizontal surface of such mass and rigidity that any increase in its resistance to displacement or deformation upon impact by the specimen would not significantly increase the damage to the specimen.

(d) *Stacking test.* (1) The specimen must be subjected for a period of at least 24 hours to a compressive load equivalent to the greater of the following:

(i) Five times the mass of the actual package; or

(ii) The equivalent of 13 kilopascals (1.9 pounds per square inch) multiplied by the vertically projected area of the package.

(2) The compressive load must be applied uniformly to two opposite sides of the specimen, one of which must be the base on which the package would normally rest.

(e) *Penetration test.* For the penetration test, the specimen must be placed on a rigid, flat, horizontal surface that will not move significantly while the test is being performed.

(1) A bar of 3.2 centimeters (1.25 inches) in diameter with a hemispherical end and a mass of 6 kilograms (13.2 pounds) must be dropped and directed to fall with its longitudinal axis vertical, onto the center of the weakest part of the specimen, so that, if it penetrates far enough, it will hit the containment system. The bar may not be significantly deformed by the test; and

(2) The height of the drop of the bar measured from its lower end to the intended point of impact on the upper surface of the specimen must be 1 meter (3.3 feet) or greater.

[Amdt. 173–244, 60 FR 50307, Sept. 28, 1995, as amended by Amdt. 173–244, 61 FR 20753, May 8, 1996]

§173.466 Additional tests for Type A packagings designed for liquids and gases.

(a) In addition to the tests prescribed in §173.465, Type A packagings designed for liquids and gases must be capable of withstanding the following tests:

(1) *Free drop test.* The packaging specimen must drop onto the target so as to suffer the maximum damage to its containment. The height of the drop measured from the lowest part of the packaging specimen to the upper surface of the target must be 9 meters (30 feet) or greater. The target must be as specified in §173.465(c)(5).

(2) *Penetration test.* The specimen must be subjected to the test specified in §173.465(e) except that the height of the drop must be 1.7 meters (5.5 feet).

§173.467 Tests for demonstrating the ability of Type B and fissile materials packagings to withstand accident conditions in transportation.

Each Type B packaging or packaging for fissile material must meet the test requirements prescribed in 10 CFR Part 71 for ability to withstand accident conditions in transportation.

§173.468 Test for LSA–III material.

(a) LSA–III Class 7 (radioactive) material must meet the test requirement of paragraph (b) of this section. Any

differences between the material to be transported and the test material must be taken into account in determining whether the test requirements have been met.

(b) *Test method.* (1) The specimen representing no less than the entire contents of the package must be immersed for 7 days in water at ambient temperature.

(2) The volume of water to be used in the test must be sufficient to ensure that at the end of the test period the free volume of the unabsorbed and unreacted water remaining will be at least 10% of the volume of the specimen itself.

(3) The water must have an initial pH of 6–8 and a maximum conductivity of 10 micromho/cm at 20°C (68°F).

(4) The total activity of the free volume of water must be measured following the 7 day immersion test and must not exceed 0.1 A_2.

§ 173.469 Tests for special form Class 7 (radioactive) materials.

(a) Special form Class 7 (radioactive) materials must meet the test requirements of paragraph (b) of this section. Each solid Class 7 (radioactive) material or capsule specimen to be tested must be manufactured or fabricated so that it is representative of the actual solid material or capsule that will be transported with the proposed radioactive content duplicated as closely as practicable. Any differences between the material to be transported and the test material, such as the use of nonradioactive contents, must be taken into account in determining whether the test requirements have been met. The following additional conditions apply:

(1) A different specimen may be used for each of the tests;

(2) The specimen may not break or shatter when subjected to the impact, percussion, or bending tests;

(3) The specimen may not melt or disperse when subjected to the heat test; and

(4) After each test, leaktightness or indispersibility of the specimen must be determined by—

(i) A method no less sensitive than the leaching assessment prescribed in paragraph (c) of this section. For a capsule resistant to corrosion by water, and which has an internal void volume greater than 0.1 milliliter, an alternative to the leaching assessment is a demonstration of leaktightness of 10^{-4} torr-1/s (1.3×10^{-24} atm-cm^3/s) based on air at 25°C (77°F) and one atmosphere differential pressure for solid radioactive content, or 10^{-6} torr-1/s (1.3×10^{-6} atm-cm^3/s) for liquid or gaseous radioactive content; or

(ii) A specimen that comprises or simulates Class 7 (radioactive) material contained in a sealed capsule need not be subjected to the leaktightness procedure specified in this section provided it is alternatively subjected to any of the tests prescribed in ISO/TR4826–1979(E), ''Sealed Radioactive Sources Leak Test Methods.''

(b) *Test methods.*—(1) *Impact Test.* The specimen must fall onto the target from a height of 9 meters (30 feet) or greater. The target must be as specified in § 173.465(c)(5).

(2) *Percussion Test.* (i) The specimen must be placed on a sheet of lead that is supported by a smooth solid surface, and struck by the flat face of a steel billet so as to produce an impact equivalent to that resulting from a free drop of 1.4 kilograms (3 pounds) through 1 meter (3.3 feet).

(ii) The flat face of the billet must be 2.5 centimeters (1 inch) in diameter with the edges rounded off to a radius of 3 millimeters ±0.3 millimeters (0.12 inch ±0.012 inch).

(iii) The lead must be of hardness number 3.5 to 4.5 on the Vickers scale and thickness 2.5 centimeters (1 inch) or greater, and must cover an area greater than that covered by the specimen.

(iv) A fresh surface of lead must be used for each impact.

(v) The billet must strike the specimen so as to cause maximum damage.

(3) *Bending test.* (i) This test applies only to long, slender sources with a length of 10 centimeters (4 inches) or greater and a length to width ratio of 10 or greater.

(ii) The specimen must be rigidly clamped in a horizontal position so that one half of its length protrudes from the face of the clamp.

(iii) The orientation of the specimen must be such that the specimen will

suffer maximum damage when its free end is struck by the flat face of a steel billet.

(iv) The billet must strike the specimen so as to produce an impact equivalent to that resulting from a free vertical drop of 1.4 kilograms (3 pounds) through 1 meter (3.3 feet).

(v) The flat face of the billet must be 2.5 centimeters (1 inch) in diameter with the edges rounded off to a radius of 3 millimeters ±0.3 millimeters (.12 inch ±0.012 inch).

(4) *Heat test.* The specimen must be heated in air to a temperature of not less than 800°C (1475°F), held at that temperature for a period of 10 minutes, and then allowed to cool.

(c) *Leaching assessment methods.* (1) For indispersible solid material—

(i) The specimen must be immersed for seven days in water at ambient temperature. The water must have a pH range of 6 to 8 and a maximum conductivity of 10 micromho per centimeter at 20°C (68°F).

(ii) The water with specimen must then be heated to a temperature of 50°C ±5° (122°F ±9°) and maintained at this temperature for four hours.

(iii) The activity of the water must then be determined.

(iv) The specimen must then be stored for at least seven days in still air of relative humidity not less than 90 percent at 30°C (86°F).

(v) The specimen must then be immersed in water under the same conditions as in paragraph (c)(1)(i) of this section, and the water with specimen must be heated to 50°C ±5 (122°F ±9°) and maintained at that temperature for four hours.

(vi) The activity of the water must then be determined. The activities determined in paragraph (c)(1)(iii) of this section and this paragraph, (c)(1)(vi), may not exceed 2 kilobecquerels (0.05 microcurie).

(2) For encapsulated material—

(i) The specimen must be immersed in water at ambient temperature. The water must have a pH of 6–8 and a maximum conductivity of 10 micromho per centimeter.

(ii) The water and specimen must be heated to a temperature of 50°C ±5° (122°F ±9°) and maintained at this temperature for four hours.

(iii) The activity of the water must then be determined.

(iv) The specimen must then be stored for at least seven days in still air at a temperature of 30°C (86°F) or greater.

(v) The process in paragraphs (c)(2)(i), (c)(2)(ii), and (c)(2)(iii) of this section must be repeated.

(vi) The activity determined in paragraph (c)(2)(iii) of this section may not exceed 2 kilobecquerels (0.05 microcurie).

(d) A specimen that comprises or simulates Class 7 (radioactive) material contained in a sealed capsule need not be subjected to—

(1) The impact test and the percussion test of this section provided that the specimen is alternatively subjected to the Class 4 impact test prescribed in ISO 2919–1980(e), ''Sealed Radioactive Sources Classification''; and

(2) The heat test of this section, provided the specimen is alternatively subjected to the Class 6 temperature test specified in the International Organization for Standardization document ISO 2919–1980(e), ''Sealed Radioactive Sources Classification.''

§ 173.471 Requirements for U.S. Nuclear Regulatory Commission approved packages.

In addition to the applicable requirements of the U.S. Nuclear Regulatory Commission (USNRC) and other requirements of this subchapter, any offeror of a Type B, Type B(U), Type B(M), or fissile material package that has been approved by the USNRC in accordance with 10 CFR part 71 must also comply with the following requirements:

(a) The offeror shall be registered with the USNRC as a party to the packaging approval, and make the shipment in compliance with the terms of the packaging approval;

(b) The outside of each package must be durably and legibly marked with the package identification marking indicated in the USNRC packaging approval;

(c) Each shipping paper related to the shipment of the package must bear the package identification marking indicated in the USNRC packaging approval;

(d) Before export shipment of the package, the offeror shall obtain a U.S. Competent Authority Certificate for that package design or if one has already been issued, the offeror shall register, in writing (including a description of the quality assurance program required by 10 CFR part 71) with the U.S. Competent Authority as a user of the certificate. (Note: The person who originally applies for a U.S. Competent Authority Certificate will be registered automatically.) Upon registration, the offeror will be furnished with a copy of the certificate. The offeror shall then submit a copy of the U.S. Competent Authority Certificate applying to that package design to the national competent authority of each country into or through which the package will be transported, unless the offeror has documentary evidence that a copy has already been furnished; and

(e) Each request for a U.S. Competent Authority Certificate as required by the IAEA regulations must be submitted in writing to the Associate Administrator for Hazardous Materials Safety. The request must be in triplicate and include copies of the applicable USNRC packaging approval, USNRC Quality Assurance Program approval number, and a reproducible 22 cm x 30 cm (8.5'' x 11'') drawing showing the make-up of the package. Each request is considered in the order in which it is received. To allow sufficient time for consideration, requests must be received at least 90 days before the requested effective date.

§ 173.472 Requirements for exporting DOT Specification Type B and fissile packages.

(a) Any offeror who exports a DOT Specification Type B or fissile material package authorized by § 173.416 or § 173.417 shall comply with paragraphs (b) through (f) of this section.

(b) The shipment must be made in accordance with the conditions of the U.S. Certificate of Competent Authority.

(c) The outside of each package must be durably and legibly marked with the package identification marking indicated in the U.S. Competent Authority Certificate.

(d) Each shipping paper related to the shipment of the package must bear the package identification marking indicated in the U.S. Competent Authority Certificate.

(e) Before export of the package, the offeror shall obtain a U.S. Competent Authority Certificate for that package design, or if one has already been issued, the offeror shall register in writing (including a description of the quality assurance program required by 10 CFR Part 71, subpart H, or 49 CFR 173.474 and 173.475) with the U.S. Competent Authority as a user of the certificate. Upon registration, the offeror will be furnished with a copy of the certificate. The offeror shall then submit a copy of the U.S. Competent Authority Certificate applying to that package design to the national competent authority of each country into or through which the package will be transported, unless the offeror has documentary evidence that a copy has already been furnished.

(f) Each request for a U.S. Competent Authority Certificate as required by IAEA regulations must be submitted in writing to the Associate Administrator for Hazardous Materials Safety. The request must be submitted in triplicate and must include a description of the quality assurance program required by 10 CFR Part 71, subpart H, or 49 CFR 173.474 and 173.475, and a reproducible 22 cm x 30 cm (8.5'' x 11'') drawing showing the make-up of the package. A copy of the USNRC quality assurance program approval will satisfy the requirement for describing the quality assurance program. Each request is considered in the order in which it is received. To allow sufficient time for consideration, requests must be received at least 90 days before the requested effective date.

§ 173.473 Requirements for foreign-made packages.

In addition to other applicable requirements of this subchapter, each offeror of a foreign-made Type B, Type B(U), Type B(M), or fissile material package for which a Competent Authority Certificate is required by IAEA's ''Regulations for the Safe Transport of Radioactive Materials,

Safety Series No. 6,'' shall also comply with the following requirements:

(a) Prior to the shipment of such a package of Class 7 (radioactive) materials into or from the U.S., the offeror shall—

(1) Have the foreign competent authority certificate revalidated by the U.S. Competent Authority, unless this has been done previously. Each request for revalidation must be submitted in writing to the Associate Administrator for Hazardous Materials Safety. The request must be in triplicate, contain all the information required by Section VII of the IAEA regulations in Safety Series No. 6, and include a copy in English of the foreign competent authority certificate. Each request is considered in the order in which it is received. To allow sufficient time for consideration, requests must be received at least 90 days before the requested effective date;

(2) Register in writing with the U.S. Competent Authority as a user of the package covered by the foreign competent authority certificate and its U.S. revalidation. If the offeror is requesting the revalidation, registration is automatic; and

(3) Supply to the carrier, upon request, the applicable competent authority certificates. However, the competent authority certificates are not required to accompany the packages to which they apply.

(b) The outside of each package must be durably and legibly marked with the competent authority identification marking indicated on the Competent Authority Certificate and revalidation.

(c) Each shipping paper for a shipment of Class 7 (radioactive) materials must bear a notation of the package identification marking indicated on the competent authority certificate or revalidation.

(d) All requirements of the foreign competent authority certificate and the U.S. Competent Authority revalidation must be fulfilled.

§173.474 Quality control for construction of packaging.

Prior to the first use of any packaging for the shipment of Class 7 (radioactive) material, the offeror shall determine that—

(a) The packaging meets the quality of design and construction requirements as specified in this subchapter; and

(b) The effectiveness of the shielding, containment and, when required, the heat transfer characteristics of the package, are within the limits specified for the package design.

§173.475 Quality control requirements prior to each shipment of Class 7 (radioactive) materials.

Before each shipment of any Class 7 (radioactive) materials package, the offeror must ensure, by examination or appropriate tests, that—

(a) The packaging is proper for the contents to be shipped;

(b) The packaging is in unimpaired physical condition, except for superficial marks;

(c) Each closure device of the packaging, including any required gasket, is properly installed, secured, and free of defects;

(d) For fissile material, each moderator and neutron absorber, if required, is present and in proper condition;

(e) Each special instruction for filling, closing, and preparation of the packaging for shipment has been followed;

(f) Each closure, valve, or other opening of the containment system through which the radioactive content might escape is properly closed and sealed;

(g) Each packaging containing liquid in excess of an A_2 quantity and intended for air shipment has been tested to show that it will not leak under an ambient atmospheric pressure of not more than 25 kPa, absolute (3.6 psia). The test must be conducted on the entire containment system, or on any receptacle or vessel within the containment system, to determine compliance with this requirement;

(h) The internal pressure of the containment system will not exceed the design pressure during transportation; and

(i) External radiation and contamination levels are within the allowable limits specified in this subchapter.

§ 173.476 Approval of special form Class 7 (radioactive) materials.

(a) Each offeror of special form Class 7 (radioactive) materials must maintain on file for at least one year after the latest shipment, and provide to the Associate Administrator for Hazardous Materials Safety on request, a complete safety analysis, including documentation of any tests, demonstrating that the special form material meets the requirements of § 173.469. An IAEA Certificate of Competent Authority issued for the special form material may be used to satisfy this requirement.

(b) Prior to the first export shipment of a special form Class 7 (radioactive) material from the United States, each offeror shall obtain a U.S. Competent Authority Certificate for the specific material. For special form material manufactured outside the United States, an IAEA Certificate of Competent Authority from the country of origin may be used to meet this requirement.

(c) Each request for a U.S. Competent Authority Certificate as required by the IAEA regulations must be submitted in writing, in triplicate, to the Associate Administrator for Hazardous Materials Safety. Each request is considered in the order in which it is received. To allow sufficient time for consideration, requests must be received at least 90 days before the requested effective date. Each petition for a U.S. Competent Authority Certificate must include the following information:

(1) A detailed description of the material, or if a capsule, a detailed description of the contents. Particular reference must be made to both physical and chemical states;

(2) A detailed statement of the capsule design and dimensions, including complete engineering drawings [22cm × 30cm (8½ inches × 11 inches)] and schedules of material, and methods of construction;

(3) A statement of the tests that have been made and their results; or evidence based on calculative methods to show that the material is able to pass the tests; or other evidence that the special form Class 7 (radioactive) material complies with § 173.469; and

(4) For the original request for a Competent Authority Certificate, evidence of a quality assurance program.

(d) Paragraphs (a) and (b) of this section do not apply in those cases where A_1 equals A_2 and the material is not required to be described on the shipping papers as ''Radioactive Material, Special Form, n.o.s.''

Subparts J–O [Reserved]

APPENDIX A TO PART 173—[RESERVED]

APPENDIX B TO PART 173—PROCEDURE FOR TESTING CHEMICAL COMPATIBILITY AND RATE OF PERMEATION IN PLASTIC PACKAGING AND RECEPTACLES

1. The purpose of this procedure is to determine the chemical compatibility and permeability of liquid hazardous materials packaged in plastic packaging and receptacles. Alternatives for this procedure are permitted as specified in § 173.24(e)(3)(iii) of this subchapter.

2. Compatibility and rate of permeation are determined by subjecting full size plastic containers (or smaller containers as permitted in paragraph 4 of this Appendix) and hazardous material lading to one of the following combinations of time and temperature:

a. Test Method 1: 180 days at a temperature no lower than 18° C. (64° F.)

b. Test Method 2: 28 days at a temperature no lower than 50° C. (122° F.)

c. Test Method 3: 14 days at a temperature no lower than 60° C. (140° F.)

3. Regardless of which test method is used, at least three sample containers shall be tested for each combination of hazardous material and size and design of container. Fill containers to rated capacity with the specific hazardous material (at the concentration to be transported) and close as for shipment. For the first and last 24 hours of storage under the selected test method, place the containers with closures downward, except that containers fitted with a vent are so placed on each occasion for five minutes only.

4. For testing under Test Method 2 or 3 in those instances where it is not practicable to use full size containers, smaller containers may be used. The small container shall be manufactured by the same process as the larger container (for example, using the same method of molding and processing temperatures) and be made of identical resins, pigments and additives.

5. Determine filled container weight or net weight of contents both before and after

storage under the selected test method. Rate of permeation is determined from loss of hazardous materials contents, during the conduct of the test, expressed as a percentage of the original weight.

6. After storage under the selected test method, the container shall be drained, rinsed, filled to rated capacity with water and, with filled container at ambient temperature, dropped from a height determined in accordance with §178.603(e) of this subchapter onto a rigid non-resilient, flat and horizontal surface.

7. Each of the following constitute test failure:

a. Visible evidence of permanent deformation due to vapor pressure build-up or collapse of walls, deterioration, swelling, crazing, cracking, excessive corrosion, oxidization, embrittlement, leakage, rupture or other defects likely to cause premature failure or a hazardous condition.

b. For materials meeting the definition of a poison according to this subchapter, a rate of permeation in excess of 0.5% determined over the test period. For all other hazardous materials, a rate of permeation in excess of 2.0% determined over the test period.

[Amdt. 173–176, 49 FR 24691, June 14, 1984, as amended by Amdt. 173–224, 55 FR 52670 Dec. 21, 1990; 56 FR 66279, Dec. 20, 1991; Amdt. 173–234, 58 FR 51533, Oct. 1, 1993]

APPENDIX C TO PART 173—PROCEDURE FOR BASE-LEVEL VIBRATION TESTING

Base-level vibration testing shall be conducted as follows:

1. Three sample packagings, selected at random, must be filled and closed as for shipment. A non-hazardous material may be used in place of the hazardous material if it has essentially the same physical characteristics.

2. The three packages must be placed on a vibrating platform that has a vertical double-amplitude (peak-to-peak displacement) of one inch. The packages should be constrained horizontally to prevent them from falling off the platform, but must be left free to move vertically, bounce and rotate.

3. The test must be performed continuously for one hour at a frequency that causes each package to be raised from the vibrating platform to such a degree that a piece of material of approximately 1.6 mm (0.063 inch) thickness (such as steel strapping or paperboard) can be passed between the bottom of any package and the platform.

4. Immediately following the period of vibration, each package shall be removed from the platform, turned on its side and observed for any evidence of leakage.

5. Rupture or leakage from any of the packages constitutes failure of the test.

[Amdt. 173–224, 55 FR 52671, Dec. 21, 1990]

APPENDIX D TO PART 173—TEST METHODS FOR DYNAMITE (EXPLOSIVE, BLASTING, TYPE A)

1. Test method D–1—Leakage Test

A wooden stick, 114 mm (4.5 inches) long and 4.8 mm (0.2 inch) inch in diameter, with a sharpened end is used to punch 5 holes in one end of the wrapper of a dynamite cartridge. A cork stopper is placed on the bottom of a glass volumetric cylinder. The dynamite cartridge is placed, perforated end down, resting on the cork stopper in the cylinder. The entire assembly is placed in an oven at 38 °C (100 °F) for 48 hours and then examined visually for evidence of leakage.

2. Test method D–2—Centrifugal Exudation Test

The test apparatus consists of a glass tube, 135 mm (5.3 inches) long and one inch in diameter, with both ends open, and is assembled in the following manner:

(a) Close the bottom with a plastic plug of diameter equal to the inner diameter of the glass tube;

(b) Place a small amount of absorbent cotton on top of the plug;

(c) Place a plastic disk that matches the inner diameter to the glass tube and has seven small perforations on top of the cotton; and

(d) Place 10 g (0.35 ounce) of the dynamite sample on top of the disk.

The assembled glass tube is then placed in a hand-operated centrifuge and spun for one minute at 600 rpm (revolutions per minute). The dynamite sample is then removed from the glass tube and weighed to determine the percent of weight loss.

3. Test method D–3—Compression Exudation Test

The entire apparatus for this test is shown in Figure 1 of this appendix. The test is conducted using the following procedures:

(a) A glass tube, 135 mm (5.3 inches) long and one inch in diameter, is held on a wooden base;

(b) A small amount of absorbent cotton is placed into the bottom of the glass tube;

(c) Ten g (0.35 ounce) of dynamite sample are placed on top of the cotton in the glass tube;

(d) A small amount of absorbent cotton is placed on top of the dynamite sample;

(e) A plastic disk that matches the inner diameter of the glass tube and has seven small perforations is placed on top of the cotton;

(f) A plastic plug matching the inner diameter of the glass tube is then placed on top of the disk;

(g) The glass tube assembly is placed under the compression rod, and compression is applied by means of the weight on the metal

lever rod. The sample is compressed for one minute; and

(h) The dynamite sample is then removed from the glass tube and weighed to determine the percent of weight loss.

FIGURE 1
COMPRESSION APPARATUS

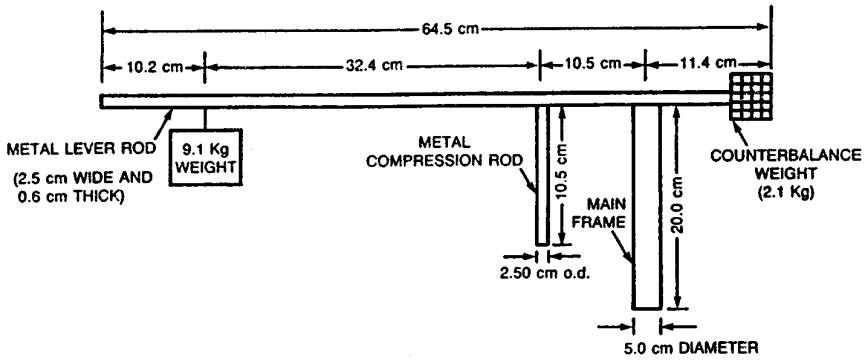

BILLING CODE 4910–60–C

[Amdt. 173–224, 55 FR 52671, Dec. 21, 1990, as amended by Amdt. 173–234, 58 FR 51533, Oct. 1, 1993]

APPENDIX E–G TO PART 173–[RESERVED]

APPENDIX H TO PART 173—METHOD OF TESTING FOR SUSTAINED COMBUSTIBILITY

1. Method

The method describes a procedure for determining if the material when heated under the test conditions and exposed to an external source of flame applied in a standard manner sustains combustion.

2. Principle of the method

A metal block with a concave depression (test portion well) is heated to a specified temperature. A specified volume of the material under test is transferred to the well, and its ability to sustain combustion is noted after application and subsequent removal of a standard flame under specified conditions.

3. Apparatus

A combustibility tester consisting of a block of aluminum alloy or other corrosion-resistant metal of high thermal conductivity is used. The block has a concave well and a pocket drilled to take a thermometer. A small gas jet assembly on a swivel is attached to the block. The handle and gas inlet for the gas jet may be fitted at any convenient angle to the gas jet. A suitable apparatus is shown in Figure 5.1 of the UN Recommendations, and the essential dimensions are given in Figures 5.1 and 5.2 of the UN Recommendations. The following equipment is needed:

(a) *Gauge,* for checking that the height of the center of the gas jet above the top of the test portion well is 2.2 mm (see Figure 5.1);

(b) *Thermometer,* mercury in glass, for horizontal operation, with a sensitivity not less than 1 mm/°C, or other measuring device of equivalent sensitivity permitting reading at 0.5°C intervals. When in position in the block, the thermometer bulb must be surrounded with thermally conducting thermoplastic compound;

(c) *Hotplate,* fitted with a temperature-control device. (Other types of apparatus with suitable temperature-control facilities may be employed to heat the metal block);

(d) *Stopwatch,* or other suitable timing device;

(e) *Syringe*, capable of delivering 2 ml to an accuracy of ±0.1 ml; and

(f) *Fuel source*, butane test fuel.

4. Sampling

The sample must be representative of the material to be tested and must be supplied and kept in a tightly closed container prior to test. Because of the possibility of loss of volatile constituents, the sample must receive only the minimum treatment necessary to ensure its homogeneity. After removing each test portion, the sample container must be immediately closed tightly to ensure that no volatile components escape from the container; if this closure is incomplete, an entirely new sample must be taken.

5. Procedure

Carry out the determination in triplicate.

WARNING—Do not carry out the test in a small confined area (for example a glove box) because of the hazard of explosions.

(a) It is essential that the apparatus be set up in a completely draft-free area (see warning) and in the absence of strong light to facilitate observation of flash, flame, etc.

(b) Place the metal block on the hotplate or heat the metal block by other suitable means so that its temperature, as indicated by the thermometer placed in the metal block, is maintained at the specified temperature within a tolerance of ±1°C. For the appropriate test temperature, see paragraph 5.(h) of this appendix. Correct this temperature for the difference in barometric pressure from the standard atmospheric pressure (101.3 kPa) by raising the test temperature for a higher pressure or lowering the test temperature for a lower pressure by 1.0°C for each 4 kPa difference. Ensure that the top of the metal block is exactly horizontal. Use the gauge to check that the jet is 2.2 mm above the top of the well when in the test position.

(c) Light the butane test fuel with the jet away from the test position (i.e. in the ''off'' position, away from the well). Adjust the size of the flame so that it is 8 mm to 9 mm high and approximately 5 mm wide.

(d) Using the syringe, take from the sample container at least 2 ml of the sample and rapidly transfer a test portion of 2 ml ±0.1 ml to the well of the combustibility tester and immediately start the timing device.

(e) After a heating time of 60 seconds (s), by which time the test portion is deemed to have reached its equilibrium temperature, and if the test fluid has not ignited, swing the test flame into the test position over the edge of the pool of liquid. Maintain it in this position for 15 s and then return it to the ''off'' position while observing the behavior of the test portion. The test flame must remain lighted throughout the test.

(f) For each test observe and record:

(i) whether there is ignition and sustained combustion or flashing, or neither, of the test portion before the test flame is moved into the test position;

(ii) whether the test portion ignites while the test flame is in the test position, and, if so, how long combustion is sustained after the test flame is returned to the ''off'' position.

(g) If sustained combustion interpreted in accordance with paragraph 6. of this appendix is not found, repeat the complete procedure with new test portions, but with a heating time of 30 s.

(h) If sustained combustion interpreted in accordance with paragraph 6. of this appendix is not found at a test temperature of 60.5°C (141°F), repeat the complete procedure with new test portions, but at a test temperature of 75°C (167°F). In the case of a material which has a flash point above 60.5° C (141° F) and below 93° C (200° F), if sustained combustion interpreted in accordance with paragraph 6. of this appendix is not found at a test temperature of 5° C (9° F) above its flash point, repeat the complete procedure with new test portions, but at a test temperature of 20° C (36° F) above its flash point.

6. Interpretation of observations

The material must be assessed either as not sustaining combustion or as sustaining combustion. Sustained combustion must be reported at either of the heating times if one of the following occurs with either of the test portions:

(a) When the test flame is in the ''off'' position, the test portion ignites and sustains combustion;

(b) The test portion ignites while the test flame is in the test position for 15 s, and sustains combustion for more than 15 s after the test flame has been returned to the ''off'' position.

NOTE TO PARAGRAPH 6. OF THIS APPENDIX: Intermittent flashing may not be interpreted as sustained combustion. Normally, at the end of 15 s, the combustion has either clearly ceased or continues. In cases of doubt, the material must be deemed to sustain combustion.

[Amdt. 173–241, 59 FR 67517, Dec. 29, 1994, as amended by Amdt. 173–255, 61 FR 50627, Sept. 26, 1996]

PART 174—CARRIAGE BY RAIL

Subpart A—General Requirements

Sec.
174.1 Purpose and scope.
174.3 Unacceptable hazardous materials shipments.
174.5 Carrier's materials and supplies.
174.9 Inspection and acceptance.
174.14 Movements to be expedited.
174.16 Removal and disposition of hazardous materials at destination.
174.20 Local or carrier restrictions.

Subpart B—General Operating Requirements

174.24 Shipping papers.
174.26 Notice to train crews of placarded cars.
174.50 Nonconforming or leaking packages.

Subpart C—General Handling and Loading Requirements

174.55 General requirements.
174.57 Cleaning cars.
174.59 Marking and placarding of rail cars.
174.61 Transport vehicles and freight containers on flat cars.
174.63 Portable tanks, IM portable tanks, intermediate bulk containers, cargo tanks, and multi-unit tank car tanks.
174.67 Tank car unloading.
174.81 Segregation of hazardous materials.

Subpart D—Handling of Placarded Rail Cars, Transport Vehicles and Freight Containers

174.82 General requirements for the handling of placarded rail cars, transport vehicles, freight containers, and bulk packages.
174.83 Switching placarded rail cars, transport vehicles, freight containers, and bulk packagings.
174.84 Position in train of loaded placarded rail cars, transport vehicles, freight containers or bulk packagings when accompanied by guards or technical escorts.
174.85 Position in train of placarded cars, transport vehicles, freight containers, and bulk packagings.
174.86 Maximum allowable operating speed.

Subpart E—Class I (Explosive) Materials

174.101 Loading Class 1 (explosive) materials.
174.102 Forbidden mixed loading and storage.
174.103 Disposition of damaged or astray shipments.
174.104 Division 1.1 or 1.2 (Class A explosive) materials; car selection, preparation, inspection, and certification.
174.105 Routing shipments, Division 1.1 or 1.2 (Class A explosive) materials.
174.106 ''Order-Notify'' or ''C.O.D.'' shipments, Division 1.1 or 1.2 (Class A explosive) materials.
174.110 Car magazine.
174.112 Loading Division 1.3 (Class B explosive) materials and Division 1.2 (devices corresponding to Class B explosive) materials (Also see § 174.101).
174.114 Record to be made of change of seals on ''Cars loaded with Division 1.1 or 1.2 (explosive) materials''.
174.115 Loading Division 1.4 (Class C explosive) materials.

Subpart F—Detailed Requirements for Class 2 (Gases) Materials

174.200 Special handling requirements.
174.201 Class 2 (gases) material cylinders.
174.204 Tank car delivery of gases, including cryogenic liquids.
174.290 Materials extremely poisonous by inhalation shipped by, for, or to the Department of Defense.

Subpart G—Detailed Requirements for Class 3 (Flammable Liquid) Materials

174.300 Special handling requirements.
174.304 Class 3 (flammable liquid) materials in tank cars.

Subparts H–I [Reserved]

Subpart J—Detailed Requirements for Division 6.1 (Poisonous) Materials

174.600 Special handling requirements for materials extremely poisonous by inhalation.
174.615 Cleaning cars.
174.680 Division 6.1 (poisonous) materials with foodstuffs.

Subpart K—Detailed Requirements for Class 7 (Radioactive) Materials

174.700 Special handling requirements for Class 7 (radioactive) materials.
174.715 Cleanliness of transport vehicles after use.
174.750 Incidents involving leakage.

AUTHORITY: 49 U.S.C. 5101–5127; 49 CFR 1.53.

Subpart A—General Requirements

§ 174.1 Purpose and scope.

This part prescribes requirements in addition to those contained in parts 171, 172, 173, and 179 of this subchapter,

to be observed with respect to the transportation of hazardous materials in or on rail cars.

[Amdt. 174–26, 41 FR 16092, Apr. 15, 1976, as amended by Amdt. 174–26A, 41 FR 40685, Sept. 20, 1976; Amdt. 174–74, 58 FR 51533, Oct. 1, 1993]

§174.3 Unacceptable hazardous materials shipments.

No person may accept for transportation or transport by rail any shipment of hazardous material that is not in conformance with the requirements of this subchapter.

[Amdt. 174–83, 61 FR 28677, June 5, 1996]

§174.5 Carrier's materials and supplies.

This subchapter applies to the transportation of a carrier's materials and supplies moving by rail, except that the shipper's certification is not required when these materials and supplies are being transported by the carrier who owns them. The requirements of this subchapter do not apply to railway torpedoes or fusees when carried in engines or rail cars. Railway torpedoes must be in closed metal boxes when not in use.

[Amdt. 174–26B, 41 FR 57071, Dec. 30, 1976]

§174.9 Inspection and acceptance.

At each location where a hazardous material is accepted for transportation or placed in a train, the carrier shall inspect each rail car containing the hazardous material, at ground level, for required markings, labels, placards, securement of closures and leakage. This inspection may be performed in conjunction with inspections required under parts 215 and 232 of this title.

[Amdt. 174–83, 61 FR 28677, June 5, 1996]

§174.14 Movements to be expedited.

(a) A carrier must forward each shipment of hazardous materials promptly and within 48 hours (Saturdays, Sundays, and holidays excluded), after acceptance at the originating point or receipt at any yard, transfer station, or interchange point, except that where biweekly or weekly service only is performed, a shipment of hazardous materials must be forwarded on the first available train.

(b) A tank car loaded with any Division 2.1 (flammable gas), Division 2.3 (poisonous gas) or Class 3 (flammable liquid) material, may not be received and held at any point, subject to forwarding orders, so as to defeat the purpose of this section or of §174.204 of this subchapter.

[Amdt. 174–26, 41 FR 16092, Apr. 15, 1976, as amended by Amdt. 174–68, 55 FR 52677, Dec. 21, 1990]

§174.16 Removal and disposition of hazardous materials at destination.

(a) *Delivery at non-agency stations.* A shipment of Class 1 (explosive) materials may not be unloaded at non-agency stations unless the consignee is there to receive it or unless properly locked and secure storage facilities are provided at that point for its protection. If delivery cannot be so made, the shipment must be taken to next or nearest agency station for delivery.

(b) *Delivery at agency stations.* A carrier shall require the consignee of each shipment of hazardous materials to remove the shipment from carrier's property within 48 hours (exclusive of Saturdays, Sundays, and holidays) after notice of arrival has been sent or given. If not so removed, the carrier shall immediately dispose of the shipments as follows:

(1) *Division 1.1 or 1.2 (Class A explosive) materials:* If safe storage is available, by storage at the owner's expense; if safe storage is not available, by return to the shipper, sale, or destruction under supervision of a competent person; or if safety requires, by destruction under supervision of a competent person.

(2) *Hazardous materials, except Division 1.1 or 1.2 (Class A explosive) materials, in carload shipments:* By storage on the carrier's property; by storage on other than the carrier's property, if safe storage on the carrier's property is not available; or by sale at expiration of 15 calendar days after notice of arrival has been sent or given to the consignee, provided the consignor has been notified of the non-delivery at the expiration of a 48-hour period and orders for disposition have not been received.

(3) *Hazardous materials, except Division 1.1 or 1.2 (Class A explosive) materials, in less-than-carload shipments:* By return to the shipper if notice of non-delivery

was requested and given the consignor as prescribed by the carrier's tariff, and orders for return to shipper have been received; by storage on the carrier's property; by storage on other than the carrier's property, if safe storage on carrier's property is not available; or by sale at expiration of 15 calendar days after notice of arrival has been sent or given to the consignee, provided the consignor has been notified of non-delivery at expiration of a 48–hour period and orders for disposition have not been received.

[Amdt. 174–26, 41 FR 16092, Apr. 15, 1976, as amended by Amdt. 174–68, 55 FR 52677, Dec. 21, 1990]

§ 174.20 Local or carrier restrictions.

(a) When local conditions make the acceptance, transportation, or delivery of hazardous materials unusually hazardous, local restrictions may be imposed by the carrier.

(b) Each carrier must report to the Bureau of Explosives for publication the full information as to any restrictions which it imposes against the acceptance, delivery, or transportation of hazardous materials, over any portion of its lines under this section.

[Amdt. 174–26, 41 FR 16092, Apr. 15, 1976]

Subpart B—General Operating Requirements

§ 174.24 Shipping papers.

A person may not accept or transport a hazardous material by rail unless that person receives a shipping paper that properly conveys the information required by part 172 of this subchapter. Only an initial carrier within the United States must receive and retain a copy of the shipper's certification as required by § 172.204 of this subchapter. This section does not apply to a material that is excepted from shipping paper requirements as specified in § 172.200 of this subchapter.

[Amdt. 174–83, 61 FR 28677, June 5, 1996, as amended by Amdt. 174–83, 61 FR 50255, Sept. 25, 1996]

§ 174.26 Notice to train crews of placarded cars.

(a) The train crew must have a document indicating the position in the train of each loaded placarded car containing hazardous materials, except when the position is changed or the placarded car is placed in the train by a member of the train crew. A train consist may be used to meet this requirement.

(b) A member of the train crew of a train transporting a hazardous material must have a copy of a document for the hazardous material being transported showing the information required by part 172 of this subchapter.

[Amdt. 174–26, 41 FR 16092, Apr. 15, 1976, as amended by Amdt. 174–26A, 41 FR 40685, Sept. 20, 1976; Amdt. 174–26B, 41 FR 57071, Dec. 30, 1976; Amdt. 174–68, 55 FR 52678, Dec. 21, 1990; Amdt. 174–83, 61 FR 28677, June 5, 1996]

EFFECTIVE DATE NOTE: By Amdt. 174–84, 62 FR 1236, Jan. 8, 1997, § 174.26 was revised, effective Oct. 1, 1997. At 62 FR 32398, July 22, 1997, the effective date was delayed until Oct. 1, 1998. For the convenience of the user the revised text is set forth as follows:

§ 174.26 Notice to train crews of placarded cars.

(a) The train crew must have a document that reflects the current position in the train of each rail car containing a hazardous material. The train crew must update the document to indicate changes in the placement of a rail car within the train. For example, the train crew may update the document by handwriting on it or by appending or attaching another document to it.

(b) A member of the crew of a train transporting a hazardous material must have a copy of a document for the hazardous material being transported showing the information required by part 172 of this subchapter.

[Amdt. 174–84, 62 FR 1236, Jan. 8, 1997]

§ 174.50 Nonconforming or leaking packages.

Leaking packages other than tank cars may not be forwarded until repaired, reconditioned, or overpacked in accordance with § 173.3 of this subchapter. Except as otherwise provided in this section, a tank car that no longer conforms to this subchapter may not be forwarded unless repaired or approved for movement by the Associate Administrator for Safety, Federal Railroad Administration. Notification and approval must be furnished in writing, or through telephonic or electronic means with subsequent written confirmation provided within two weeks.

For the applicable address and telephone number, see part 107, subpart B, Appendix A, of this chapter. A leaking tank car containing a hazardous material may be moved without repair or approval only so far as necessary to reduce or eliminate an immediate threat of harm to human health or the environment when it is determined its movement would provide greater safety than allowing the car to remain in place. In the case of a liquid leak, measures must be taken to prevent the spread of the liquid.

[Amdt. 174–83, 61 FR 28677, June 5, 1996]

Subpart C—General Handling and Loading Requirements

§174.55 General requirements.

(a) Each package containing a hazardous material being transported by rail in a freight container or transport vehicle must be loaded so that it cannot fall or slide and must be safeguarded in such a manner that other freight cannot fall onto or slide into it under conditions normally incident to transportation. When this protection cannot be provided by using other freight, it must be provided by blocking and bracing. For examples of blocking and bracing in freight containers and transport vehicles, see Bureau of Explosives Pamphlet Nos. 6 and 6C.

(b) Each package containing a hazardous material bearing package orientation markings prescribed in §172.312 of this subchapter must be loaded within a transport vehicle or freight container to remain in the correct position indicated by those markings during transportation.

(c) The doors of a freight container or transport vehicle may not be used to secure a load that includes a package containing a hazardous material unless the doors meet the design strength requirements of Specification M–930 (for freight containers) and M–931 (for trailers) in the AAR's Manual of Standards and Recommended Practices and the load is also within the limits of the design strength requirements for the doors.

[Amdt. 174–83, 61 FR 28677, June 5, 1996]

§174.57 Cleaning cars.

All hazardous material which has leaked from a package in any rail car or on other railroad property must be carefully removed.

§174.59 Marking and placarding of rail cars.

No person may transport a rail car carrying hazardous materials unless it is marked and placarded as required by this subchapter. Placards and car certificates lost in transit must be replaced at the next inspection point, and those not required must be removed at the next terminal where the train is classified. For Canadian shipments, required placards lost in transit, must be replaced either by those required by part 172 of this subchapter or by those authorized under §171.12a.

[Amdt. 174–26, 41 FR 16092, Apr. 15, 1976, as amended by Amdt. 174–48, 50 FR 41521, Oct. 11, 1985]

§174.61 Transport vehicles and freight containers on flat cars.

(a) A transport vehicle, freight container, or package containing a hazardous material must be designed and loaded so that it will not become damaged to an extent that would affect its integrity under conditions normally incident to transportation. Each unit must be secured on a flatcar so that it cannot permanently change position during transit. Packages of hazardous materials contained therein must be loaded and braced as provided by §§174.101, 174.112, 174.115 and 174.55. Placards must be applied when prescribed by part 172 of this subchapter and part 174.

(b) Except as specified in §173.21, a truck body, trailer, or freight container equipped with heating or refrigerating equipment which has fuel or any article classed as a hazardous material may be loaded and transported on a flat car as part of a joint rail highway movement. The heating or refrigerating equipment is considered to be a part of the truck body or trailer and is not subject to any other requirements of this subchapter. The truck body,

trailer, or freight container must be secured on the flatcar so that it cannot change position during transit.

[Amdt. 174–26, 41 FR 16092, Apr. 15, 1976, as amended by Amdt. 174–26A, 41 FR 40685, Sept. 20, 1976; Amdt. 174–38, 45 FR 32698, May 19, 1980; Amdt. 174–39, 45 FR 81572, Dec. 11, 1980; Amdt. 174–59, 51 FR 5974, Feb. 18, 1986; Amdt. 174–68, 57 FR 45464, Oct. 1, 1992; Amdt. 174–79, 59 FR 64744, Dec. 15, 1994]

§ 174.63 Portable tanks, IM portable tanks, intermediate bulk containers, cargo tanks, and multi-unit tank car tanks.

(a) A carrier may not transport a bulk packaging (e.g., portable tank, IM portable tank, intermediate bulk container, cargo tank, or multi-unit tank car tank) containing a hazardous material in container-on-flatcar (COFC) or trailer-on-flatcar (TOFC) service except as authorized by this section or unless approved for transportation by the Associate Administrator for Safety, FRA.

(b) A bulk packaging containing a hazardous material (including IM 101 and IM 102 when appropriate according to dimensions and weight distribution) may be transported inside a fully closed transport vehicle or fully closed freight container provided it is properly secured with a restraint system that will prevent it from changing position, sliding into other packages, or contacting the side or end walls (including doors) under conditions normally incident to transportation.

(c) When not transported in conformance with and subject to paragraph (b) of this section, a bulk packaging may be transported in COFC service or TOFC service subject to the following conditions as applicable:

(1) The bulk packaging contains a material packaged in accordance with § 173.240, 173.241, 173.242, or 173.243 of this subchapter;

(2) The tank and flatcar conform to requirements in AAR 600 of the AAR Specifications for Tank Cars, Specification M–1002, entitled ''Specifications for Acceptability of Tank Containers'';

(3) For TOFC service, the trailer chassis conforms to requirements in paragraphs 3, 4, 5, and 6 of AAR Specification M–943 ''Container Chassis For TOFC Service'' of the AAR specification for ''Specially Equipped Freight Car and Intermodal Equipment'';

(4) For COFC service, the container support and securement systems conform to requirements in Specification M–952 ''Intermodal Container Support and Securement Systems for Freight Cars'', of the AAR specification for ''Specially Equipped Freight Car and Intermodal Equipment'';

(5) If transported in a well car—

(i) The tank is not in a double-stacked configuration (i.e., no freight container or portable tank is placed above or below the tank); and

(ii) The tank is transported in the well with its outlet valve facing outward towards the end of the well and away from any adjacent tank or container; and

(6) All securement fittings shall be fully engaged and in the locked position, provided; however, if the tank is transported in a well car, it must be loaded into a well appropriate for the length of the container and any void filling device present must be secured in its designed appropriate position.

(d) An approval in effect on February 28, 1991 for the transportation of portable tanks or IM portable tanks in TOFC or COFC service expires on the date stated in the approval letter or June 15, 1995, whichever is later.

(e) A carrier may not transport a cargo tank or multi-unit tank car tank containing a hazardous material in TOFC or COFC service unless approved for such service by the Associate Administrator for Safety, FRA. However, in the event of an accident or incident, no such approval is necessary for the transportation of a cargo tank containing a hazardous material in TOFC service under the following condition(s):

(1) There is an emergency need for the cargo tank in order to mitigate the consequences of an incident; and

(2) Movement of the cargo tank is limited to transportation necessary for emergency purposes.

[Amdt. 174–79, 59 FR 64744, Dec. 15, 1994]

§ 174.67 Tank car unloading.

(a) In unloading tank cars, the following rules must be observed (see subpart F of this part for gases):

(1) Unloading operations must be performed only by reliable persons properly instructed in unloading hazardous materials and made responsible for careful compliance with this part.

(2) Brakes must be set and wheels blocked on all cars being unloaded.

(3) Caution signs must be so placed on the track or cars to give necessary warning to persons approaching the cars from the open end of a siding and must be left up until after the cars are unloaded and disconnected from the discharge connection. The signs must be of metal or other comparable material, at least 30 cm (12 inches) high by 38 cm (15 inches) wide in size, and bear the words, ''STOP—Tank Car Connected'', or ''STOP—Men at Work'', the word ''STOP'' being in letters at least 10 cm (3.9 inches) high and the other words in letters at least 5 cm (2 inches) high. The letters must be white on a blue background.

(4) Before a manhole cover or outlet valve cap is removed from a tank car, the car must be relieved of all interior pressure by cooling the tank with water or by venting the tank by raising the safety valve or opening the dome vent at short intervals. However, if venting to relieve pressure will cause a dangerous amount of vapor to collect outside the car, venting and unloading must be deferred until the pressure is reduced by allowing the car to stand overnight or otherwise cooling the contents. These precautions are not necessary when the car is equipped with a manhole cover which hinges inward or with an inner manhole cover which does not have to be removed to unload the car, and when pressure is relieved by piping vapor into a condenser or storage tank.

(b) After the pressure is released, the seal must be broken and the manhole cover removed as follows:

(1) *Screw type.* The cover must be loosened by placing a bar between the manhole cover lug and knob. After two complete turns, so that vent openings are exposed, the operation must be stopped, and if there is any sound of escaping vapor, the cover must be screwed down tightly and the interior pressure relieved as prescribed in paragraph (a)(4) of this section, before again attempting to remove the cover.

(2) *Hinged and bolted type.* All nuts must be unscrewed one complete turn, after which same precautions as prescribed for screw type cover must be observed.

(3) *Interior type.* All dirt and cinders must be carefully removed from around the cover before the yoke is unscrewed.

(c) When the car is unloaded through a bottom outlet valve, the manhole cover must be adjusted as follows:

(1) *Screw type.* The cover must be put in place, but not entirely screwed down, so that air may enter the tank through the vent holes in threaded flange of the cover.

(2) *Hinged and bolted type.* A non-metallic block must be placed under one edge of the cover.

(3) *Interior type.* The screw must be tightened up in the yoke so that the cover is brought up within one-half inch of the closed position.

(d) When unloading through the bottom outlet of a car equipped with an interior manhole type cover, and in each case where unloading is done through the manhole (unless a special cover with a safety vent opening and a tight connection for the discharge outlet is used), the manhole must be protected by asbestos or metal covers against the entrance of sparks or other sources of ignition of vapor, or by being covered and surrounded with wet burlap or similar cloth material. The burlap or other cloth must be kept damp by the replacement or the application of water as needed.

(e) Seals or other substances must not be thrown into the tank and the contents may not be spilled over the car or tank.

(f) The valve rod handle or control in the dome must be operated several times to see that outlet valve in bottom of tank is on its seat before valve cap is removed.

(g) The valve cap, or the reducer when a large outlet is to be used, must be removed with a suitable wrench after the set screws are loosened and a pail must be placed in position to catch any liquid that may be in the outlet chamber. If the valve cap or reducer does not unscrew easily, it may be tapped lightly with a mallet or wooden block in an upward direction. If leakage shows upon starting the removal,

the cap or reducer may not be entirely unscrewed. Sufficient threads must be left engaged and sufficient time allowed to permit controlled escape of any accumulation of liquid in the outlet chamber. If the leakage stops or the rate of leakage diminishes materially, the cap or reducer may be entirely removed. If the initial rate of leakage continues, further efforts must be made to seat the outlet valve (see paragraph (f) of this section). If this fails, the cap or reducer must be screwed up tight and the tank must be unloaded through the dome. If upon removal of the outlet cap the outlet chamber is found to be blocked with frozen liquid or any other matter, the cap must be replaced immediately and a careful examination must be made to determine whether the outlet casting has been cracked. If the obstruction is not frozen liquid, the car must be unloaded through the dome. If the obstruction is frozen liquid and no crack has been found in the outlet casting, the car may, if circumstances require it, be unloaded from the bottom by removing the cap and attaching unloading connections immediately. Before opening the valve inside the tank car, steam must be applied to the outside of the outlet casting or wrap casting with burlap or other rags and hot water must be applied to melt the frozen liquid.

(h) Unloading connections must be securely attached to unloading pipes on the dome or to the bottom discharge outlets before any discharge valves are opened.

(i) Tank cars may not be allowed to stand with unloading connections attached after unloading is completed. Throughout the entire period of unloading, and while car is connected to unloading device, the car must be attended by the unloader.

(j) If necessary to discontinue unloading a tank car for any reason, all unloading connections must be disconnected. All valves must first be tightly closed, and the closures of all other openings securely applied.

(k) As soon as a tank car is completely unloaded, all valves must be made tight by the use of a bar, wrench or other suitable tool, the unloading connections must be removed and all other closures made tight.

(l) Railroad defect cards may not be removed.

(m) If oil or gasoline has been spilled on the ground around connections, it must be covered with fresh, dry sand or dirt.

(n) All tools and implements used in connection with unloading must be kept free of oil, dirt, and grit.

[Amdt. 174–26, 41 FR 16092, Apr. 15, 1976, as amended by Amdt. 174–26A, 41 FR 40685, Sept. 20, 1976; Amdt. 174–43, 48 FR 27699, June 16, 1983; Amdt. 174–68, 55 FR 52678, Dec. 21, 1990; 56 FR 66280, Dec. 20, 1991; Amdt. 174–81, 60 FR 49111, Sept. 21, 1995; Amdt. 174–83, 61 FR 28678, June 5, 1996]

§ 174.81 Segregation of hazardous materials.

(a) This section applies to materials which meet one or more of the hazard classes defined in this subchapter and are in packages which are required to be labeled or placarded under the provisions of part 172 of this subchapter.

(b) When a rail car is to be transported by vessel, other than a ferry vessel, hazardous materials on or within that rail car must be stowed and segregated in accordance with § 176.83(b) of this subchapter.

(c) In addition to the provisions of paragraph (d) of this section, cyanides or cyanide mixtures may not be loaded or stored with acids.

(d) Hazardous materials may not be loaded, transported, or stored together, except as provided in this section, and in accordance with the following Table:

SEGREGATION TABLE FOR HAZARDOUS MATERIALS

Class or Division		Notes	1.1, 1.2	1.3	1.4	1.5	1.6	2.1	2.2	2.3 gas Zone A	2.3 gas Zone B	3	4.1	4.2	4.3	5.1	5.2	6.1 liquids PG I Zone A	7	8 liquids only
Explosives	1.1 and 1.2	A	*	*	*	*	*	X	X	X	X	X	X	X	X	X	X	X	X	X
Explosives	1.3		*	*	*	*	*	X		X	X	X		X	X	X	X	X		X
Explosives	1.4		*	*	*	*	*	O		O	O	O		O				O		O
Very insensitive explosives.	1.5	A	*	*	*	*	*	X	X	X	X	X	X	X	X	X	X	X	X	X
Extremely insensitive explosives.	1.6		*	*	*	*	*													
Flammable gases	2.1		X	X	O	X				X	O							O	O	
Non-toxic, non-flammable gases.	2.2		X			X														
Poisonous gas Zone A	2.3		X	X	O	X		X				X	X	X	X	X	X			X
Poisonous gas Zone B	2.3		X	X	O	X		O				O	O	O	O	O	O			O
Flammable liquids	3		X	X	O	X				X	O					O		X		
Flammable solids	4.1		X			X				X	O							X		O
Spontaneously combustible materials.	4.2		X	X	O	X				X	O							X		X
Dangerous when wet materials.	4.3		X	X		X				X	O							X		O
Oxidizers	5.1	A	X	X		X				X	O	O						X		O
Organic peroxides	5.2		X	X		X				X	O							X		O
Poisonous liquids PG I Zone A.	6.1		X	X	O	X		O				X	X	X	X	X	X			X
Radioactive materials	7		X			X		O												
Corrosive liquids	8		X	X	O	X				X	O		O	X	O	O	O	X		

(e) Instructions for using the segregation table for hazardous materials in paragraph (d) of this section are as follows:

(1) The absence of any hazard class or division, or a blank space in the Table indicates that no restrictions apply.

(2) The letter ''X'' in the Table indicates that these materials may not be loaded, transported, or stored together in the same rail car or storage facility during the course of transportation.

(3) The letter ''O'' in the Table indicates that these materials may not be loaded, transported, or stored together in the same rail car or storage facility during the course of transportation unless separated in a manner that, in the event of leakage from packages under conditions normally incident to transportation, commingling of hazardous materials would not occur. Notwithstanding the methods of separation employed, Class 8 (corrosive) liquids may not be loaded above or adjacent to Class 4 (flammable) or Class 5 (oxidizing) materials; except that shippers may load carload shipments of such materials together when it is known that the mixture of contents would not cause a fire or a dangerous evolution of heat or gas.

(4) The ''*'' in the Table indicates that segregation among different Class 1 (explosive) materials is governed by the compatibility table in paragraph (f) of this section.

(5) The note ''A'' in the second column of the Table means that, notwithstanding the requirements of the letter ''X'', ammonium nitrate fertilizer may be loaded or stored with Division 1.1 (Class A explosive) or Division 1.5 (blasting agents) materials.

(6) When the § 172.101 Table or § 172.402 of this subchapter requires a package to bear a subsidiary hazard label, segregation appropriate to the subsidiary hazard must be applied when that segregation is more restrictive than that required by the primary hazard. However, hazardous materials of the same class may be stowed together without regard to segregation required by any secondary hazard if the materials are not capable of reacting dangerously with each other and causing combustion or dangerous evolution of heat, evolution of flammable, poisonous, or asphyxiant gases, or formation of corrosive or unstable materials.

(f) Class 1 (explosive) materials may not be loaded, transported, or stored together, except as provided in this section, and in accordance with the following Table:

COMPATIBILITY TABLE FOR CLASS 1 (EXPLOSIVE) MATERIALS

Compatibility group	A	B	C	D	E	F	G	H	J	K	L	N	S
A		X	X	X	X	X	X	X	X	X	X	X	X
B	X		X	4	X	X	X	X	X	X	X	X	4/5
C	X	X		2	2	X	X	X	X	X	X	3	4/5
D	X	4	2		2	X	X	X	X	X	X	3	4/5
E	X	X	2	2		X	X	X	X	X	X	3	4/5
F	X	X	X	X	X		X	X	X	X	X	X	4/5
G	X	X	X	X	X	X		X	X	X	X	X	4/5
H	X	X	X	X	X	X	X		X	X	X	X	4/5
J	X	X	X	X	X	X	X	X		X	X	X	4/5
K	X	X	X	X	X	X	X	X	X		X	X	4/5
L	X	X	X	X	X	X	X	X	X	X	1	X	X
N	X	X	3	3	3	X	X	X	X	X	X		4/5
S	X	4/5	4/5	4/5	4/5	4/5	4/5	4/5	4/5	4/5	X	4/5	

(g) Instructions for using the compatibility table for Class 1 (explosive) materials in paragraph (f) of this section are as follows:

(1) A blank space in the Table indicates that no restrictions apply.

(2) The letter ''X'' in the Table indicates that explosives of different compatibility groups may not be carried on the same rail car, unless packed in separate freight containers (e.g., two or more freight containers mounted upon the same rail car).

(3) The numbers in the Table mean the following:

(i) ''1'' means explosives from compatibility group L may only be carried on the same rail car with an identical explosive.

(ii) ''2'' means any combination of explosives from compatibility group C, D, or E is assigned to compatibility group E.

(iii) ''3'' means any combination of explosives from compatibility group C, D, or E with those in compatibility group N is assigned to compatibility group D.

(iv) ''4'' means detonators and detonating primers, Division 1.4S (Class C explosives), may not be loaded in the same car with Division 1.1 and 1.2 (Class A explosive) materials.

(v) ''5'' means Division 1.4S fireworks may not be loaded in the same car with Division 1.1 or 1.2 (Class A explosive) materials.

(h) Except as provided in paragraph (i) of this section, explosives of the same compatibility group but of different divisions may be transported together provided that the whole shipment is transported as though its entire contents were of the lower numerical division (i.e., Division 1.1 being lower than Division 1.2). For example, a mixed shipment of Division 1.2 (Class A explosive) materials and Division 1.4 (Class C explosive) materials, compatibility group D, must be transported as Division 1.2 (Class A explosive) materials.

(i) When Division 1.5 (blasting agent) materials, compatibility group D are transported in the same freight container as Division 1.2 (Class A explosive) materials, compatibility group D, the shipment must be transported as Division 1.1 (Class A explosive) materials, compatibility group D.

[Amdt. 174–68, 55 FR 52678, Dec. 21, 1990, as amended at 56 FR 66280–66281, Dec. 20, 1991; 57 FR 45464, Oct. 1, 1992; Amdt. 174–68, 57 FR 59310, Dec. 15, 1992; Amdt. 174–75, 58 FR 50237, Sept. 24, 1993; Amdt. 174–83, 61 FR 51339, Oct. 1, 1996]

Subpart D—Handling of Placarded Rail Cars, Transport Vehicles and Freight Containers

§ 174.82 General requirements for the handling of placarded rail cars, transport vehicles, freight containers, and bulk packages.

(a) Unless otherwise specified, this subpart does not apply to the handling of rail cars, transport vehicles, freight containers, or bulk packagings, which contain Division 1.6, combustible liquids, Division 6.1 PG III materials, Class 9 materials, or ORM–D materials.

(b) A placarded rail car, transport vehicle, freight container, or bulk package may not be transported in a passenger train.

[Amdt. 174–68, 55 FR 52680, Dec. 21, 1990, as amended at 56 FR 66281, Dec. 20, 1991; 57 FR 45464, Oct. 1, 1992; Amdt. 174–74, 58 FR 51533, Oct. 1, 1993]

§ 174.83 Switching placarded rail cars, transport vehicles, freight containers, and bulk packagings.

(a) In switching operations where the use of hand brakes is necessary—

(1) It must be determined by trial whether a loaded, placarded car, or a car occupied by a rider in a draft containing a placarded car, has its hand brakes in proper working condition before it is cut off;

(2) A loaded, placarded tank car or a draft which includes a loaded placarded tank car may not be cut off until the preceeding rail car clears the ladder track; and

(3) A loaded, placarded tank car or a draft which includes a loaded placarded tank car must clear the ladder track before another rail car is allowed to follow.

(b) Any loaded rail car placarded for a Division 1.1 or Division 1.2 explosive, a Division 2.3 Hazard Zone A gas or a

Division 6.1 PG I Hazard Zone A material, or a Class DOT 113 tank car displaying a Division 2.1 (flammable gas) placard, including a Class DOT 113 tank car containing only a residue of a Division 2.1 material, may not be:

(1) Cut off while in motion;

(2) Coupled into with more force than is necessary to complete the coupling; or

(3) Struck by any car moving under its own momentum.

(c) A placarded flatcar, or a flatcar carrying a placarded transport vehicle, freight container, or bulk packaging under this subchapter may not be cut off while in motion.

(d) No rail car moving under its own momentum may be permitted to strike any placarded flatcar or any flatcar carrying a placarded transport vehicle, freight container, or bulk packaging.

(e) No placarded flatcar or any flatcar carrying a placarded transport vehicle, freight container, or bulk packaging may be coupled into with more force than is necessary to complete the coupling.

(f) When transporting a rail car, transport vehicle, or freight container placarded for Division 1.1 or 1.2 (Class A explosive) materials in a terminal, yard, or on a side track or siding, the placarded rail car must be separated from the engine by at least one non-placarded rail car and must be placed in a location so that it will be safe from danger of fire. A rail car, transport vehicle, or freight container placarded for Division 1.1 or 1.2 (Class A explosive) materials may not be placed under a bridge or overhead crossing, or in or alongside a passenger shed or station, except during transfer operations.

[Amdt. 174–68, 55 FR 52680, Dec. 21, 1990, as amended at 56 FR 66281, Dec. 20, 1991; Amdt. 174–75, 58 FR 50237, Sept. 24, 1993; Amdt. 174–77, 59 FR 48549, Sept. 21, 1994; Amdt. 174–83, 61 FR 51339, Oct. 1, 1996]

§174.84 Position in train of loaded placarded rail cars, transport vehicles, freight containers or bulk packagings when accompanied by guards or technical escorts.

A rail car placarded in Division 1.1 or 1.2 (Class A explosive); Division 2.3 (Hazard Zone A; poisonous gas); or Division 6.1 (PG I, Hazard Zone A; poisonous liquid) in a moving or standing train must be next to and ahead of any car occupied by the guards or technical escorts accompanying the placarded rail car. However, if a rail car occupied by the guards or technical escorts has temperature control equipment in operation, it must be the fourth car behind any car requiring Division 1.1 or 1.2 (Class A explosive) placards.

[Amdt. 174–68, 55 FR 52680, Dec. 21, 1990, as amended at 56 FR 66281, Dec. 20, 1991]

§174.85 Position in train of placarded cars, transport vehicles, freight containers, and bulk packagings.

(a) Except as provided in paragraphs (b) and (c) of this section, the position in a train of each loaded placarded car, transport vehicle, freight container, and bulk packaging must conform to the provisions of this section.

(b) A car placarded ''RADIOACTIVE'' must comply with train positioning requirements of paragraph (d) of this section and must be separated from a locomotive, occupied caboose, or carload of undeveloped film by at least one non-placarded car.

(c) A tank car containing the residue of a hazardous material must be separated from a locomotive or occupied caboose by at least one rail car other than a placarded tank car.

(d) Position of rail cars in a train. In the following table:

POSITION IN TRAIN OF PLACARDED CARS TRANSPORTING HAZARDOUS MATERIALS

RESTRICTIONS	Placard Group 1	Placard Group 2		Placard Group 3		Placard Group 4
	Rail Car	Tank Car	Rail Car	Tank Car	Rail Car	Rail Car
1. When train length permits, placarded car may not be nearer than the sixth car from the engine or occupied caboose.	X	X		X		
2. When train length does not permit, placarded car must be placed near the middle of the train, but not nearer than the second car from an engine or occupied caboose.	X	X		X		

POSITION IN TRAIN OF PLACARDED CARS TRANSPORTING HAZARDOUS MATERIALS—Continued

RESTRICTIONS	Placard Group 1	Placard Group 2		Placard Group 3		Placard Group 4
	Rail Car	Tank Car	Rail Car	Tank Car	Rail Car	Rail Car
3. A placarded car may not be placed next to an open-top car when any of the lading in the open top car protrudes beyond the car ends, or if the lading shifted, would protrude beyond the car ends..	X	X		X		
4. A placarded car may not be placed next to a loaded flat car, except closed TOFC/COFC equipment, auto carriers, and other specially equipped cars with tie-down devices for securing vehicles. Permanent bulk head flat cars are considered the same as open-top cars.	X	X		X		
5. A placarded car may not be placed next to any transport vehicle or freight container having an internal combustion engine or an open-flame device in operation..	X	X		X		
6. Placarded cars may not be placed next to each other based on the following:						
Placard Group 1		X	X	X	X	X
Placard Group 2	X			X	X	X
Placard Group 3	X	X	X			X
Placard Group 4	X	X	X	X	X	

PLACARD GROUP:
Group 1—Divisions 1.1 and 1.2 (Class A explosive) materials.
Group 2—Divisions 1.3, 1.4, 1.5 (Class B and C explosive), Class 2 (compressed gas; other than Div 2.3, PG I, Zone A), Class 3 (flammable liquid), Class 4 (flammable solid), Class 5 (oxidizing), Class 6 (poisonous liquid; other than Div 6.1, PG I, Zone A), and Class 8 (corrosive) materials.
Group 3—Divisions 2.3 (PG I, Zone A; poisonous gas) and 6.1 (PG I, Zone A; poisonous liquid) materials.
Group 4—Class 7 (radioactive) materials.

(1) Where an ''X'' appears at the intersection of a Placard Group column and a Restriction row, the corresponding restriction applies.

(2) ''Rail Car'' means a car other than a tank car.

(3) For purposes of this subpart, each unit of an articulated intermodal rail car shall be considered as one car.

[Amdt. 174–68, 55 FR 52680, Dec. 21, 1990, as amended at 57 FR 45464, Oct. 1, 1992; Amdt. 174–83, 61 FR 28678, June 5, 1996; Amdt.174–83, 61 FR 50255, Sept. 25, 1996; Amdt. 174–83, 61 FR 51339, Oct. 1, 1996]

§ 174.86 Maximum allowable operating speed.

For molten metals and molten glass shipped in packagings other than those prescribed in § 173.247 of this subchapter, the maximum allowable operating speed may not exceed 15 mph for shipments by rail.

[Amdt. 174–69, 56 FR 49990, Oct. 2, 1991]

Subpart E—Class I (Explosive) Materials

§ 174.101 Loading Class 1 (explosive) materials.

(a) Boxes containing Division 1.1 or 1.2 (Class A explosive) materials must be loaded so that the ends of wooden boxes will not bear against sides of any fiberboard boxes and so that the ends of any box will not cause a pressure point on a small area of another box.

(b) Explosive bombs, unfuzed projectiles, rocket ammunition and rocket motors, Division 1.1, 1.2, or 1.3 (Class A or Class B explosive) materials, which are not packed in wooden boxes, or large metal packages of incendiary bombs, each weighing 226 kg (500 pounds) or more, may be loaded in stock cars or in flat bottom gondola cars only if they are adequately braced. Boxed bombs, rocket ammunition and rocket motors, Division 1.1, 1.2, or 1.3 (Class A or Class B explosive) materials, which due to their size cannot be loaded in closed cars, may be loaded in open-top cars or on flatcars, provided they are protected from the weather and accidental ignition.

(c) Boxes of Division 1.1 or 1.2 (Class A explosive) materials packed in long cartridges, bags, or sift-proof liners, and containing no liquid explosive ingredient, may be loaded on their sides or ends.

(d) Division 1.1 or 1.2 (Class A explosive) materials may not be loaded higher than any permanent car lining unless additional lining is provided as high as the lading.

(e) When the lading of a car includes any Class 1 (explosive) materials, the weight of the lading must be distributed insofar as possible to equalize the weight on each side of the car and over the trucks.

(f) Except when boxed, metal kegs containing Class 1 (explosive) materials must be loaded on their sides with their ends toward the ends of the car. Packages of Class 1 (explosive) materials may not be placed in the space opposite the doors unless the doorways are boarded on the inside as high as the lading. This paragraph does not apply to palletized packages if they are braced so they cannot fall or slide into the doorways during transportation.

(g) Wooden kegs, fiber kegs, barrels, and drums must be loaded on their sides or ends, to best suit the conditions.

(h) Packages containing any Division 1.1 or 1.2 (Class A explosive) materials for (see § 174.104), detonators, detonator assemblies, or boosters with detonators must be securely blocked and braced to prevent the packages from changing position, falling to the floor, or sliding into each other, under conditions normally incident to transportation. Class 1 (explosive) materials must be loaded so as to avoid transfer at stations. For recommended methods of blocking and bracing, see Bureau of Explosives Pamphlets No. 6 and 6A. Heavy packages or containers must be trucked, rolled, or moved by skids, fork trucks, or other handling devices and may not be dropped from trucks, platforms, or cars. Planks for rolling trucks from platforms to cars must have beveled ends. Loading platforms and the shoes of each workman must be free from grit. All possible precautions must be taken against fire. Class 1 (explosive) materials must be kept in a safe place and inaccessible to unauthorized persons while being held by a carrier for loading or delivery.

(i) To prevent delays of local freight trains, when there are shipments of Class 1 (explosive) materials for different destinations loaded in a ''peddler car'' or ''way car'' the shipment for each destination must be stayed separately.

(j) Forwarding and transfer stations for Class 1 (explosive) materials must be provided with the necessary materials for staying.

(k) Shippers must furnish the material for staying packages of Class 1 (explosive) materials loaded by them.

(l) Division 1.1 or 1.2 (Class A explosive) materials may not be loaded, transported, or stored in a rail car equipped with any type of lighted heater or open-flame device, or electric devices having exposed heating coils, or in a rail car equipped with any apparatus or mechanism utilizing an internal combustion engine in its operation.

(m) [Reserved]

(n) A container car or freight container on a flatcar or a gondola car other than a drop-bottom car, when properly loaded, blocked, and braced to prevent change of position under conditions normally incident to transportation, may be used to transport any Division 1.1 or 1.2 (Class A explosive) material except black powder packed in metal containers. A freight container must be designed, constructed, and maintained so as to be weather tight and capable of preventing the entrance of sparks. In addition:

(1) A freight container must be of such design and so braced as to show no evidence of failure of the container or the bracing when subjected to impact from each end of at least 13 km (8.1 miles) per hour. Its efficiency shall be determined by actual test, using dummy loads equal in weight and general character to material to be shipped.

(2) A container car or car which is loaded with freight containers must be placarded with the Class 1 (explosive) materials placards as required by subpart F of part 172 of this subchapter and with properly executed car certificates as required by § 174.104.

(3) Lading must be so loaded, blocked, and braced within the freight

container that it will not change position under impact from each end of at least 13 km (8.1 miles) per hour.

(o) Division 1.1, 1.2, or 1.3 (Class A or Class B explosive) materials may be loaded and transported in a tight closed truck body or trailer on a flatcar. Wooden boxed bombs, rocket ammunition, and rocket motors, Division 1.1, 1.2, or 1.3 (Class A or Class B explosive) materials, which due to their size cannot be loaded in tight, closed truck bodies or trailers, may be loaded in or on open-top truck bodies or trailers. However, they must be protected against accidental ignition. In addition:

(1) Each truck body or trailer must meet the requirements of part 177 of this subchapter, applicable to shipments of Class 1 (explosive) materials by motor vehicle.

(2) Each truck body or trailer must be so secured on the rail car so that it will not permanently change position or show evidence of failure or impending failure of the method of securing the truck body or trailer under impact from each end of at least 13 km (8.1 miles) per hour. Its efficiency shall be determined by actual test, using dummy loads equal in weight and general character to the material to be shipped. For recommended methods of blocking and bracing, see Bureau of Explosives Pamphlet 6C.

(3) Lading must be so loaded, blocked, and braced within or on the truck body or trailer that it will not change position under impact from each end of at least 13 km (8.1 miles) per hour. For recommended methods of blocking and bracing see Bureau of Explosives Pamphlet 6C.

(4) Each rail car containing Class 1 (explosive) materials and each rail car loaded with truck bodies, trailers or containers containing Class 1 (explosive) materials must be placarded with Class 1 (explosive) materials placards as required by subpart F of part 172 of this subchapter and with properly executed car certificates as required by § 174.104.

(5) Each fuel tank of a heater or refrigerating machinery on the truck bodies or trailers must be drained and all automatic heating or refrigerating machinery must be made inoperative by disconnection of the automatic controls or the source of power for their operations.

[Amdt. 174–26, 41 FR 16092, Apr. 15, 1976, as amended by Amdt. 174–26A, 41 FR 40685, Sept. 20, 1976; Amdt. 174–26B, 41 FR 57071, Dec. 30, 1976; Amdt. 174–36, 44 FR 70732, Dec. 10, 1979; Amdt. 174–59, 51 FR 5974, Feb. 18, 1986; Amdt. 174–68, 55 FR 52681, Dec. 21, 1990; Amdt. 174–83, 61 FR 51339, Oct. 1, 1996]

§ 174.102 Forbidden mixed loading and storage.

(a) Division 1.1 or 1.2 (Class A explosive) materials and initiating or priming explosives may not be transported together in the same rail car. Additionally, they may not be transported or loaded in the same rail car or stored on carrier property with charged electric storage batteries or with any hazardous material for which a NONFLAMMABLE GAS, FLAMMABLE GAS, FLAMMABLE LIQUID, FLAMMABLE SOLID, OXIDIZER, ORGANIC PEROXIDE, RADIOACTIVE or CORROSIVE label is required.

(b) Class 1 (explosive) materials may not be loaded together or with other hazardous materials, except as provided in § 174.81. See § 174.104 for loading shipments of Class 1 (explosive) materials or any other material in a placarded and certified car containing a shipment of Division 1.1 or 1.2 (Class A explosive) materials.

[Amdt. 174–26, 41 FR 16092, Apr. 15, 1976, as amended by Amdt. 174–68, 55 FR 52681, Dec. 21, 1990]

§ 174.103 Disposition of damaged or astray shipments.

(a) Packages of Class 1 (explosive) materials found damaged or broken in transit may be repaired when practicable and not dangerous. A broken box of Division 1.1 or 1.2 (Class A explosive) materials that cannot be repaired must be reinforced by stout wrapping paper and twine, placed in another strong box and surrounded by dry, fine sawdust or dry and clean cotton waste or elastic wads made from dry newspapers. A ruptured can or keg must be sealed and enclosed in a strong cloth bag of good quality and boxed. Damaged packages thus protected and properly marked may be forwarded. The

box and waybill must be marked to indicate that it has been repacked.

(b) Care must be exercised in repacking damaged containers so that no spark is produced by contact of metal or other hard surfaces which could ignite loose particles of explosive compositions that may be strewn on car floors or freight. In addition, the car floors must be thoroughly swept, and washed with a plentiful supply of water. Iron-wheel trucks, metal hammers, or other metal tools that may produce sparks may not be used. Metal tools must be limited to those made of brass, bronze, or copper.

(c) Each package of Class 1 (explosive) materials showing evidence of leakage of liquid ingredients must:

(1) Be refused if leakage is discovered before acceptance;

(2) Be disposed of to a person who is competent and willing to remove them from the carrier's property, if the leakage is discovered while the shipment is in transit; or

(3) Be removed immediately by consignee, if the leakage is discovered at the shipment's destination.

(d) When the disposition required by paragraph (c) of this section cannot be made, the leaking package must be packed in other boxes large enough to permit enclosure and the leaking boxes must be surrounded by at least 5 cm (2 inches) of dry, fine sawdust or dry and clean cotton waste, and be stored in a station magazine or other safe place until the arrival of an inspector of the Bureau of Explosives, or other authorized person, to superintend the destruction or disposition of the condemned material.

(e) If careful inspection shows that an astray shipment of Class 1 (explosive) materials is in proper condition for safe transportation, it must be forwarded immediately to its destination if known, or returned to the shipper by the most practicable route.

(f) When a package in an astray shipment is not in proper condition for safe transportation (see paragraphs (a), (c), and (d) of this section), or when the name and address of the consignee and the shipper are unknown, disposition must be made as prescribed by paragraphs (c) and (d) of this section.

[Amdt. 174–26, 41 FR 16092, Apr. 15, 1976, as amended by Amdt. 174–68, 55 FR 52681, Dec. 21, 1990]

§174.104 Division 1.1 or 1.2 (Class A explosive) materials; car selection, preparation, inspection, and certification.

(a) Except as provided in §174.101 (b), (n), and (o), Division 1.1 or 1.2 (Class A explosive) materials being transported by rail may be transported only in a certified and properly placarded closed car of not less than 36,300 kg (80,028 pounds) capacity, with steel underframes and friction draft gear or cushioned underframe, except that on a narrow-gauge railroad they may be transported in a car of less capacity as long as the car of greatest capacity and strength available is used.

(b) Each rail car used for transporting Division 1.1 or 1.2 (Class A explosive) materials must meet the following requirements as applicable:

(1) The car must be equipped with air brakes, hand brakes, and roller bearings which are in condition for service.

(2) The car may not have any holes or cracks in the roof, sides, ends, or doors through which sparks may enter, or unprotected decayed spots which may hold sparks and start a fire.

(3) The roof of the car must be carefully inspected from the outside for decayed spots, especially under or near the running board, and such spots must be covered or repaired to prevent their holding fire from sparks. A car with a roof generally decayed, even if tight, may not be used.

(4) The doors must close tightly so that sparks cannot get in at the joints, and, if necessary to achieve this degree of tightness, the doors must be stripped. The stripping should be placed on the inside and fastened to the door frames where it will form a shoulder against which the closed doors are pressed by means of wedges or cleats in door shoes or keepers. The openings under the doors should be similarly closed. The hasp fastenings must be examined with the doors closed and fastened, and the doors must be cleated when necessary to prevent them from shifting. When the car is opened for

any reason, the wedges or cleats must be replaced before car containing Class 1 (explosive) materials is permitted to proceed.

(5) The roller bearings and the trucks must be carefully examined and put in such condition as to reduce to a minimum the danger of hotboxes or other failure necessitating the setting out of the car before reaching its destination.

(6) The car must be carefully swept out before it is loaded. For less-than-carload shipments the space in which the packages are to be loaded must be carefully swept. If evidence of a potential hazardous residue is apparent after the floor has been swept, the carrier must either decontaminate the car or provide a suitable substitute car.

(7) Any holes in the floor or lining must be repaired and special care taken that there are no projecting nails or bolts or exposed pieces of metal which may work loose or produce holes in packages of Class 1 (explosive) materials during transit. Protruding nails in the floor or lining which have worked loose must be drawn, and if necessary for the purpose of fastening the floor or lining, new nails must be driven through other parts thereof.

(8) Metal floor plates must be completely covered with wood, plywood, or fiber or composition sheets of adequate thickness and strength to prevent contact of the floor plates with the packages of Class 1 (explosive) materials under conditions incident to transportation, except that the covering of metal floor plates is not necessary for carload shipments loaded by the Department of Defense provided the Class 1 (explosive) materials are of such nature that they are not liable to leakage of dust, powder, or vapor which might become the cause of an explosion.

(9) If the car is equipped with automobile loading devices, it may not be used unless the loading device is securely attached to the roof of the car with fastenings supplementing those already provided and so fixed that it cannot fall.

(10) The car must be equipped with high-friction composition brake shoes (except metal deck flat cars used for COFC/TOFC service may be equipped with high phosphorus cast iron brake-shoes) and brake rigging designed for this type of brake shoe. Each brake shoe on the car must be at least 1 cm (0.4 inch) thick, and in safe and suitable condition for service.

(11) The car must have either a metal subfloor with no combustible material exposed beneath the car, or metal spark shields extending from center sill to side sills and from end sills to at least 30 cm (12 inches) beyond the extreme treads of the inside wheels of each truck, which are tightly fitted against the subfloor so that there is no vacant space or combustible material exposed. The metal subfloor or spark shields may not have an accumulation of oil, grease, or other debris which could support combustion.

(c) Before Division 1.1 or 1.2 (Class A explosive) materials may be loaded into a rail car, the car must have been inspected and certified to be in compliance with the requirements of paragraph (b) of this section by a qualified person designated under § 215.11 of this title. The certification shall be made in Car Certificate No. 1 on the form prescribed in paragraph (f) of this section.

(d) If the carrier furnishes the car to a shipper for loading Division 1.1 or 1.2 (Class A explosive) materials, the shipper or his authorized employee shall, before commencing the loading of the car, inspect the interior thereof, and after loading certify to the proper condition of the car and the loading. This certification shall be made on the first signature line in Car Certificate No. 2 on the form prescribed in paragraph (f) of this section. In addition, the finished load must be inspected and certified to be in compliance with the requirements of this part by a qualified person designated under § 215.11 of this title before the car goes forward. This certification shall be made on the second signature line in Car Certificate No. 2 on the form prescribed in paragraph (f) of this section. If the loading is performed by the carrier, Car Certificate No. 2 may only be signed by a qualified person designated under § 215.11 of this title.

(e) If a trailer or container containing Division 1.1 or 1.2 (Class A explosive) materials is loaded on a flatcar, the loading and securing of the load on

the car must be supervised by a representative of the shipper or carrier. The certification shall be made in Car Certificate No. 3 on the form prescribed in paragraph (f) of this section.

(f) Each car certificate for use in connection with the inspection of rail cars for the carriage of Division 1.1 or 1.2 (Class A explosive) materials shall be printed on strong tag board measuring 18 by 18 cm (7.1 by 7.1 inches) or 15 by 20 cm (5.9 by 7.9 inches). It must be duly executed in triplicate by the carrier, and by the shipper if he loads the shipments. The original must be filed by the carrier at the forwarding station in a separate file and the other two must be attached to the car, one to each outer side on a fixed placard board or as otherwise provided.

———————————Railroad

CAR CERTIFICATE

No. 1 ———————— Station ———————— 19—.

I hereby certify that I have this day personally examined Car Number ——— and that the car is in condition for service and complies with the FRA Freight Car Safety Standards (49 CFR part 215) and with the requirements for freight cars used to transport explosives prescribed by the DOT Hazardous Materials Regulation (49 CFR part 174).

Qualified Person Designated Under 49 CFR 215.11

No. 2 ———————— Station ———————— 19—.

I have this day personally examined the above car and hereby certify that the explosives in or on this car, or in or on vehicles or in containers have been loaded and braced; that placards have been applied, according to the regulations prescribed by the Department of Transportation; and that the doors of cars so equipped fit or have been stripped so that sparks cannot enter.

Shipper or his authorized agent

Qualified Person Designated Under 49 CFR 215.11

No. 3 ———————— Station ———————— 19—.

I hereby certify that I have this day personally supervised the loading of the vehicles or containers on and their securement to the above car.

Shipper or railway employee inspecting loading and securement

NOTE 1: A shipper must decline to use a car not in proper condition.

NOTE 2: All certificates, where applicable, must be signed.

NOTE 3: Car certificates remaining on hand as of the effective date of these regulations may be used until stocks are exhausted but not after July 1, 1977.

[Amdt. 174–26, 41 FR 16092, Apr. 15, 1976]

EDITORIAL NOTE: For FEDERAL REGISTER citations affecting §174.104, see the List of CFR Sections Affected appearing in the Finding Aids section of this volume.

§174.105 Routing shipments, Division 1.1 or 1.2 (Class A explosive) materials.

Before a shipment of Division 1.1 or 1.2 (Class A explosive) materials destined to a point beyond the lines of the initial carrier is accepted from the shipper, the initial carrier shall ascertain that the shipment can go forward by the route designated. To avoid delays en route, the initial carrier must be in possession of full rate information before forwarding the shipment.

[Amdt. 174–26, 41 FR 16092, Apr. 15, 1976, as amended by Amdt. 174–68, 55 FR 52682, Dec. 21, 1990]

§174.106 "Order-Notify" or "C.O.D." shipments, Division 1.1 or 1.2 (Class A explosive) materials.

(a) A carrier may not accept for transportation Division 1.1 or 1.2 (Class A explosive) materials, detonators, or detonating primers in any quantity when consigned to ''order-notify'' or ''C.O.D.'', except on a through bill of lading to a place outside the United States.

(b) A carrier may not accept for transportation Division 1.1 or 1.2 (Class A explosive) materials, detonators, or detonating primers which the shipper consigns to himself unless the shipper has a resident representative to receive them at the delivery point.

(c) A carrier may not accept Division 1.1 or 1.2 (Class A explosive) materials for transportation subject to ''stop-off privileges en route for partial loading or unloading.''

[Amdt. 174–26, 41 FR 16092, Apr. 15, 1976, as amended by Amdt. 174–36, 44 FR 70732, Dec. 10, 1979; Amdt. 174–68, 55 FR 52682, Dec. 21, 1990]

§ 174.110 Car magazine.

When specially authorized by the carrier, Division 1.1 or 1.2 (Class A explosive) materials in quantity not exceeding 68 kg (150 pounds) may be carried in construction or repair cars if the packages of Class 1 (explosive) materials are placed in a ''magazine'' box made of sound lumber not less than 2.5 cm (0.98 inch) thick, covered on the exterior with metal, and provided with strong handles. The box must be plainly stenciled on the top, sides, and ends, in letters not less than 5 cm (2 inches) high, ''EXPLOSIVES—DANGEROUS—HANDLE CAREFULLY''. The box must be provided with strong hinges and with a lock for keeping it securely closed. Vacant space in the box must be filled with a cushioning material such as sawdust or excelsior, and the box must be properly stayed to prevent movement within the car. The car must be placarded with EXPLOSIVES 1.1 or 1.2 (EXPLOSIVES A) placards when the magazine contains Division 1.1 or 1.2 (Class A explosive) materials.

[Amdt. 174–26, 41 FR 16092, Apr. 15, 1976, as amended by Amdt. 174–26A, 41 FR 40685, Sept. 20, 1976; Amdt. 174–68, 55 FR 52682, Dec. 21, 1990]

§ 174.112 Loading Division 1.3 (Class B explosive) materials and Division 1.2 (devices corresponding to Class B explosive) materials (Also see § 174.101).

(a) Division 1.3 (Class B explosive) materials and Division 1.2 (devices corresponding to Class B explosive) materials may not be loaded, transported or stored in a rail car equipped with any type of lighted heater or open-flame device, or in a rail car equipped with any apparatus or mechanism utilizing an internal combustion engine in its operation.

(b) Except as provided in § 174.101(b), (n), or (o) Division 1.3 (Class B explosive) materials and Division 1.2 (devices corresponding to Class B explosive) materials must be transported in a closed car or container car which is in good condition, and into which sparks cannot enter. The car does not require the car certificates prescribed in § 174.104(c) through (f). If the doors are not tight, they must be stripped to prevent the entrance of sparks. Wood floored cars must be equipped with spark shields (see § 174.104). Packages of Division 1.3 (Class B explosive) materials and Division 1.2 (devices corresponding to Class B explosive) materials must be blocked and braced to prevent their movement and possible damage due to movement of other freight during transportation. For recommended methods of blocking and bracing see Bureau of Explosives Pamphlet No. 6.

(c) Division 1.3 (Class B explosive) materials and Division 1.2 (devices corresponding to Class B explosive) materials may not be transported in a truck body, trailer, or container on a flatcar unless:

(1) The truck body, trailer, or container is closed and tight;

(2) All automatic heating or refrigerating machinery with which the truck body, trailer, or container is equipped is inoperative; and

(3) Packages of Division 1.3 (Class B explosive) materials and Division 1.2 (devices corresponding to Class B explosive) materials are blocked and braced within the truck body, trailer, or container to prevent their movement and possible damage due to movement of other freight during transportation (ends, sidewalls, or doors of the truck body, trailer, or container may not be relied on to prevent the shifting of heavy loads). For recommended methods of blocking and bracing see Bureau of Explosives Pamphlet No. 6C. See § 174.101(o).

[Amdt. 174–26, 41 FR 16092, Apr. 15, 1976, as amended by Amdt. 174–26B, 41 FR 57072, Dec. 30, 1976; Amdt. 174–68, 55 FR 52682, Dec. 21, 1990; Amdt. 174–83, 61 FR 51339, Oct. 1, 1996]

§ 174.114 Record to be made of change of seals on "Cars loaded with Division 1.1 or 1.2 (explosive) materials".

When a car seal is changed on a car requiring ''EXPLOSIVES 1.1 or EXPLOSIVES 1.2 (EXPLOSIVES A) placards'' while en route or before delivery to a consignee, a record of the change showing the following information must be made on or attached to the waybill or other form of memorandum which must accompany the car to its destination:

Railroad Place Date

Car Initials Car Number Number or description of seal broken

Number or description of seal used to reseal car _____

Reasons for opening car _____

Condition of load _____

Name and occupation of person opening car

[Amdt. 174–26, 41 FR 16092, Apr. 15, 1976, as amended by Amdt. 174–26A, 41 FR 40685, Sept. 20, 1976; Amdt. 174–68, 55 FR 52682, Dec. 21, 1990]

§ 174.115 Loading Division 1.4 (Class C explosive) materials.

(a) Division 1.4 (Class C explosive) materials may be loaded into any closed car in good condition, or into any container car in good condition. Car certificates are not required. Packages of Division 1.4 (Class C explosive) materials must be blocked and braced to prevent their movement and possible damage due to movement of other freight during transportation. For methods of recommended loading and bracing see Bureau of Explosives Pamphlet No. 6.

(b) Division 1.4 (Class C explosive) materials may not be transported in a truck body, trailer, or container on a flatcar unless:

(1) The truck body, trailer, or container is closed and tight;

(2) All automatic heating or refrigerating machinery with which the truck body, trailer, or container is equipped is inoperative; and

(3) Packages of Division 1.4 (Class C explosive) materials are blocked and braced within the truck body, trailer, or container to prevent their movement and possible damage due to movement of other freight during transportation. Ends, side walls, or doors of the truck body, trailer, or container may not be relied on to prevent shifting of heavy loads. For recommended methods of blocking and bracing see Bureau of Explosives Pamphlet No. 6C.

[Amdt. 174–26, 41 FR 16092, Apr. 15, 1976, as amended by Amdt. 174–36, 44 FR 70732, Dec. 10, 1979; Amdt. 174–68, 55 FR 52682, Dec. 21, 1990]

Subpart F—Detailed Requirements for Class 2 (Gases) Materials

§ 174.200 Special handling requirements.

(a) Division 2.1 (flammable gas) materials may not be loaded, transported, or stored in a rail car equipped with any type of lighted heater or open-flame device, or in a rail car equipped with any apparatus or mechanism utilizing an internal combustion engine in its operation.

(b) Division 2.1 (flammable gas) materials may not be loaded in a truck body or trailer equipped with any type of lighted heater or any automatic heating or refrigerating apparatus when such truck bodies or trailers are loaded on flatcars except as provided in paragraph (c) of this section.

(c) Heating or refrigeration apparatus may be operated on a motor vehicle loaded on a flatcar when the motor vehicle is loaded with Division 2.1 (flammable gas) materials only if:

(1) The lading space is not equipped with any electrical apparatus that is not nonsparking or explosion-proof;

(2) There is no combustion apparatus in the lading space;

(3) There is no connection for the return of air from the lading space to any combustion apparatus; and

(4) The heating system conforms to § 393.77 of this title and does not heat any part of the lading over 54 °C (129°F).

[Amdt. 174–26, 41 FR 16092, Apr. 15, 1976, as amended by Amdt. 174–68, 55 FR 52682, Dec. 21, 1990; 56 FR 66281, Dec. 20, 1991]

§ 174.201 Class 2 (gases) material cylinders.

(a) Except as provided in paragraphs (b) and (c) of this section, cylinders containing Class 2 (gases) materials being transported in a rail car must be:

(1) Securely lashed in an upright position so as to prevent their overturning;

(2) Loaded into racks securely attached to the car;

(3) Packed in boxes or crates of such dimensions as to prevent their overturning; or

(4) Loaded in a horizontal position.

(b) Specification DOT–4L (§ 178.57 of this subchapter) cylinders being transported in a rail car must be loaded in an upright position and be securely braced.

(c) Cylinders containing Class 2 (gases) materials may be transported in stock cars, gondola cars and flat cars. However, they may not be transported in hopper bottom cars.

[Amdt. 174–26, 41 FR 16092, Apr. 15, 1976, as amended by Amdt. 174–26A, 41 FR 40685, Sept. 20, 1976; Amdt. 174–32, 43 FR 48644, Oct. 19, 1978; Amdt. 174–68, 55 FR 52682, Dec. 21, 1990]

§ 174.204 Tank car delivery of gases, including cryogenic liquids.

(a) A tank car containing Class 2 (gases) material may not be unloaded unless it is consigned for delivery and unloaded on a private track (see § 171.8 of this subchapter). However, if a private track is not available, it may be delivered and unloaded on carrier tracks subject to the following conditions:

(1) A tank car of DOT–106A or 110A type (§ 179.300 or § 179.301 of this subchapter) may not be delivered and the loaded unit tanks may not be removed from the car frame on carrier tracks. However, a carrier may give permission for the unloading of these containers on carrier tracks only if a private siding is not available within a reasonable trucking distance of the final destination. In addition, before the car is accepted for transportation, the shipper must obtain from the delivering carrier and file with the originating carrier, written permission for the removal and the consignee must furnish an adequately strong mechanical hoist by which the tanks can be lifted from the car and deposited directly upon vehicles furnished by the consignee for immediate removal from carrier property.

(2) The following tank cars may not be delivered and unloaded on carrier tracks unless the lading is piped directly from the car to permanent storage tanks of sufficient capacity to receive the entire contents of the car; however, such cars may be stored on a private track (see § 171.8 of this subchapter) or on carrier tracks designated by the carrier for such storage:

(i) A tank car containing Division 2.1 (flammable gas) material that is a cryogenic liquid; or

(ii) A tank car, except for a DOT–106A or 110A multi-unit tank car tank (§ 179.300 or § 179.301 of this subchapter), containing anhydrous ammonia; hydrogen chloride, refrigerated liquid; hydrocarbon gas, liquefied; or liquefied petroleum gas; and having interior pipes for liquid and gas discharge valves equipped with check valves.

(b) [Reserved]

[Amdt. 174–26, 41 FR 16092, Apr. 15, 1976, as amended by Amdt. 174–26A, 41 FR 40685, Sept. 20, 1976; Amdt. 174–32, 43 FR 48644, Oct. 19, 1978; Amdt. 174–43, 48 FR 27699, June 16, 1983; 48 FR 50440, 50441, Nov. 1, 1983; Amdt. 174–68, 55 FR 52682, Dec. 21, 1990]

§ 174.290 Materials extremely poisonous by inhalation shipped by, for, or to the Department of Defense.

(a) General. The provisions of this section apply only to materials extremely poisonous by inhalation which are Division 2.3 materials in Hazard Zone A and Division 6.1 materials in Hazard Zone A, as defined in § 173.133(a)(2) of this subchapter. Such materials when shipped by, for, or to the Department of Defense may be transported by rail only if loaded and handled in accordance with the requirements of this section.

(b) A Division 2.3 Hazard Zone A or a Division 6.1 Hazard Zone A material extremely poisonous by inhalation may be transported in:

(1) UN 1N1 or UN 1N2 metal drums or equivalent military specification metal drums, by boxcar, gondola car (flat bottom), or stock car in carload lots. See § 174.55(a) (1) through (4) and § 174.600 for blocking, bracing, and stowage requirements;

(2) Tanks which are authorized under this subchapter for a Hazard Zone A material extremely poisonous by inhalation, Specification DOT 106A (§§ 179.300 and 179.301 of this subchapter), mounted on or secured to a multi-unit car or gondola car (flat bottom) in carload lots only;

(3) Bombs, by boxcar, or gondola car (flat bottom) in carload lots only; or

(4) Projectiles or ammunition for cannon with gas filled projectiles, by boxcar in carload or less-than-carload lots.

(c) Each shipment of one or more carloads of a material extremely poisonous by inhalation, as described in paragraph (b) of this section, must be accompanied by a Department of Defense qualified escort supplied with equipment to handle leaks and other packaging failures which could result in escape of the material. The escort shall remain with the shipment during the entire time that it is in the custody of the carrier and in the event of leakage or escape of material, shall make repairs and perform decontamination as necessary.

(d) When a material extremely poisonous by inhalation is transported in a tank, the tank must be securely mounted on a rail car especially provided for it or on a gondola car prepared with substantial wooden frames and blocks.

(e) Bombs, projectiles, and cannon ammunition being transported by rail must be loaded, blocked and braced as shown in Bureau of Explosives Pamphlet No. 6A, or Department of Defense specifications. When a shipment is loaded in a gondola car it must be securely blocked and braced and not loaded higher than the sides of the car.

(f) When a material extremely poisonous by inhalation is transported in drums with filling holes in the heads, they must be loaded on their bottoms. They may be loaded in rows, lengthwise of the car and any space between the sides of the car and the nearest row of drums must be ''filled in'' with wooden boards or lumber nailed to sides of the car sufficient in length and width to contact both hoops of drums, or they may be loaded across the car in staggered stacks of which the number of drums in alternate stacks is reduced by one drum. All drums in stacks following the first stack loaded in the end of the car must be placed tightly into the angle of the space formed by the sidewalls of the drum in the preceding stack. Any space between the sides of the car and the drums in stacks having the greater number of drums must be filled in with wooden boards or lumber nailed to sides of the car sufficient in length and width to contact both hoops of the drums.

(g) When a material extremely poisonous by inhalation is transported in drums with filling holes in the sides, they must be loaded on their sides with the filling holes up. They must be loaded lengthwise of the car in rows and any space between the sides of the car and the nearest row of drums must be filled in with wooden boards or lumber nailed to sides of the car sufficient in length and width to contact both hoops of the drums.

(h) When a material extremely poisonous by inhalation is transported in drums in a boxcar, they must be loaded from ends of the car toward the space between the car doors, and there braced by center gates and wedges. See Sketch 1, Bureau of Explosives Pamphlet No. 6.

(i) The doorways of a boxcar in which a material poisonous by inhalation is being transported must be protected by one of the methods prescribed in Sketch 1, Bureau of Explosives Pamphlet No. 6A.

[Amdt. 174–68, 55 FR 52683, Dec. 21, 1990; Amdt. 174–74, 58 FR 51533, Oct. 1, 1993]

Subpart G—Detailed Requirements for Class 3 (Flammable Liquid) Materials

§ 174.300 Special handling requirements.

(a) Class 3 (flammable liquid) materials may not be loaded, transported, or stored in a rail car equipped with any type of lighted heater or open-flame device, or in a rail car equipped with any apparatus or mechanism utilizing an internal combustion engine in its operation.

(b) A truck body or trailer which is loaded with a Class 3 (flammable liquid) materials and equipped with a lighted heater or any automatic heating or refrigerating apparatus may not be loaded on a flatcar except as provided in paragraph (c) of this section.

(c) Heating or refrigeration apparatus on a motor vehicle loaded with Class 3 (flammable liquid) materials

may be operated while the motor vehicle is loaded on a flatcar only if:

(1) The lading space is not equipped with any electrical apparatus that is not non-sparking or explosion-proof;

(2) There is no combustion apparatus in the lading space;

(3) There is no connection for the return of air from the lading space to any combustion apparatus; and

(4) The heating system conforms to § 393.77 of this title and does not heat any part of the lading over 54 °C (129 °F).

(d) Metal barrels or drums containing Class 3 (flammable liquid) materials may be transported in a steel gondola or flatcar or in a stock car. However, they may not be transported in a hopper bottom car.

[Amdt. 174–26, 41 FR 16092, Apr. 15, 1976, as amended by Amdt. 174–31, 43 FR 31143, July 20, 1978; Amdt. 174–68, 55 FR 52683, Dec. 21, 1990]

§ 174.304 Class 3 (flammable liquid) materials in tank cars.

A tank car containing a Class 3 (flammable liquid) material, other than liquid road asphalt or tar, may not be transported by rail unless it is originally consigned or subsequently reconsigned to a party having a private track on which it is to be delivered and unloaded (see § 171.8 of this subchapter) or to a party using railroad siding facilities which are equipped for piping the liquid from the tank car to permanent storage tanks of sufficient capacity to receive the entire contents of the car.

[Amdt. 174–26, 41 FR 16092, Apr. 15, 1976, as amended by Amdt. 174–32, 43 FR 48644, Oct. 19, 1978; Amdt. 174–68, 55 FR 52683, Dec. 21, 1990]

Subparts H–I [Reserved]

Subpart J—Detailed Requirements for Division 6.1 (Poisonous) Materials

§ 174.600 Special handling requirements for materials extremely poisonous by inhalation.

A tank car containing a material extremely poisonous by inhalation which is a Division 2.3 material in Hazard Zone A or a Division 6.1 material in Hazard Zone A, as defined in § 173.133(a)(2) of this subchapter, may not be transported by rail unless it is originally consigned or subsequently reconsigned to a party having a private track on which it is to be delivered and unloaded (see § 171.8 of this subchapter) or to a party using railroad siding facilities which are equipped for piping the liquid or gas from the tank car to permanent storage tanks or sufficient capacity to receive the entire contents of the car. See the requirements in § 174.290 for materials extremely poisonous by inhalation which are shipped by, for, or to the Department of Defense.

[Amdt. 174–68, 55 FR 52684, Dec. 21, 1990]

§ 174.615 Cleaning cars.

(a) [Reserved]

(b) After Division 6.1 (poisonous) materials are unloaded from a rail car, that car must be thoroughly cleaned unless the car is used exclusively in the carriage of Division 6.1 (poisonous) materials.

[Amdt. 174–26, 41 FR 16092, Apr. 15, 1976, as amended by Amdt. 174–68, 55 FR 52684, Dec. 21, 1990; Amdt. 174–82, 61 FR 18933, Apr. 29, 1996]

§ 174.680 Division 6.1 (poisonous) materials with foodstuffs.

(a) A carrier may not transport any package bearing a POISON label in the same car with materials marked as or known to be foodstuffs, feed, or any other edible materials intended for consumption by humans or animals.

(b) A carrier must separate any package bearing a KEEP AWAY FROM FOOD label from materials marked as or known to be foodstuffs, feed, or any other edible materials intended for consumption by humans or animals as required in § 174.81(e)(3) for classes identified with the letter ''O'' in the Segregation Table for Hazardous Materials.

[Amdt. 174–68, 55 FR 52684, Dec. 21, 1990]

EFFECTIVE DATE NOTE: By Amdt. 174–84, 62 FR 1236, Jan. 8, 1997, § 174.680(a) was revised, effective Oct. 1, 1997. At 62 FR 39398, July 22, 1997, the effective date was delayed until Oct. 1, 1998. For the convenience of the user the revised text is set forth as follows:

§ 174.680 Division 6.1 (poisonous) materials with foodstuffs.

(a) A carrier may not transport any package bearing a POISON or POISON INHALATION HAZARD label in the same car with any material marked as or known to be a foodstuff, feed, or any other edible material intended for consumption by humans or animals.

* * * * *

Subpart K—Detailed Requirements for Class 7 (Radioactive) Materials

§ 174.700 Special handling requirements for Class 7 (radioactive) materials.

(a) Each rail shipment of low specific activity materials or surface contaminated objects as defined in § 173.403 of this subchapter must be loaded so as to avoid spillage and scattering of loose material. Loading restrictions are prescribed in § 173.427 of this subchapter.

(b) The number of packages of Class 7 (radioactive) materials that may be transported by rail car or stored at any single location is limited to a total transport index number (as defined in § 173.403 of this subchapter) of not more than 50. This provision does not apply to exclusive use shipments as described in §§ 173.403, 173.427, 173.441, and 173.457 of this subchapter.

(c) Each package of Class 7 (radioactive) material bearing RADIOACTIVE YELLOW–II or RADIOACTIVE YELLOW–III labels may not be placed closer than 0.9 meter (3 feet) to an area (or dividing partition between areas) which may be continuously occupied by any passenger, rail employee, or shipment of one or more animals, nor closer than 4.5 meters (15 feet) to any package containing undeveloped film (if so marked). If more than one package of Class 7 (radioactive) materials is present, the distance must be computed from the table below on the basis of the total transport index number (determined by adding together the transport index numbers on the labels of the individual packages) of packages in the rail car or storage area:

Total transport index	Minimum separation distance to nearest undeveloped film		Minimum distance to area of persons or minimum distance from dividing partition of a combination car	
	Meters	Feet	Meters	Feet
None	0	0	0	0
0.1 to 10.0	4.5	15	0.9	3
10.1 to 20.0	6.7	22	1.2	4
20.1 to 30.0	7.7	29	1.5	5
30.1 to 40.0	10	33	1.8	6
40.1 to 50.0	10.9	36	2.1	7

Note: The distance in this table must be measured from the nearest point on the nearest packages of Class 7 (radioactive) materials.

(d) Each fissile material, controlled shipment must be transported in accordance with one of the methods prescribed in § 173.457 of this subchapter. The transport controls must be adequate to assure that no fissile material, controlled shipment is transported in the same transport vehicle with any other fissile Class 7 (radioactive) material shipment. In loading and storage areas, each fissile material, controlled shipment must be segregated by a distance of at least 6 meters (20 feet) from other packages required to bear one of the ''radioactive'' labels described in Part 172 of this subchapter.

(e) A person shall not remain unnecessarily in, on or near a transport vehicle containing Class 7 (radioactive) materials.

(f) In the case of packages shipped under the exclusive use provisions of § 173.441(b) of this subchapter for packages with external radiation levels in excess of 2 mSv per hour (200 mrem per hour) at the package surface—

(1) The transport vehicle must meet the requirements for a closed transport vehicle (§ 173.403 of this subchapter);

(2) Each package must be secured so that its position within the transport vehicle remains fixed under conditions normally incident to transportation; and

(3) The radiation level may not exceed 0.02 mSv per hour (2 mrem per hour) in any normally occupied position in the transport vehicle or adjacent rail car.

[Amdt. 174–80, 60 FR 50331, Sept. 28, 1995, as amended by Amdt. 174–80, 61 FR 20753, May 8, 1996]

§ 174.715 Cleanliness of transport vehicles after use.

(a) Each transport vehicle used for transporting Class 7 (radioactive) materials as exclusive use, as defined in § 173.403 of this subchapter, must be surveyed with appropriate radiation detection instruments after each use. A transport vehicle may not be returned to service until the radiation dose rate at any accessible surface is 0.005 mSv per hour (0.5 mrem per hour) or less, and there is no significant removable radioactive surface contamination, as defined in § 173.443 of this subchapter.

(b) This section does not apply to any transport vehicle used solely for transporting Class 7 (radioactive) materials if a survey of the interior surface shows that the radiation dose rate does not exceed 0.1 mSv per hour (10 mrem per hour) at the interior surface or 0.02 mSv per hour (2 mrem per hour) at 1 meter (3.3 feet) from any interior surface. The transport vehicle must be stenciled with the words ''FOR RADIOACTIVE MATERIALS USE ONLY'' in lettering at least 7.6 centimeters (3 inches) high in a conspicuous place on both sides of the exterior of the transport vehicle, and it must be kept closed at all times other than during loading and unloading.

[Amdt. 174–80, 60 FR 50332, Sept. 28, 1995]

§ 174.750 Incidents involving leakage.

(a) In addition to the incident reporting requirements of §§ 171.15 and 171.16 of this subchapter, the carrier shall also notify the offeror at the earliest practicable moment following any incident in which there has been breakage, spillage, or suspected radioactive contamination involving Class 7 (radioactive) materials shipments. Transport vehicles, buildings, areas, or equipment in which Class 7 (radioactive) materials have been spilled may not be again placed in service or routinely occupied until the radiation dose rate at every accessible surface is less than 0.005 mSv per hour (0.5 mrem per hour) and there is no significant removable radioactive surface contamination (see § 173.443 of this subchapter).

(b) The package or materials should be segregated as far as practicable from personnel contact. If radiological advice or assistance is needed, the U.S. Department of Energy (DOE) should also be notified. In case of obvious leakage, or if it appears likely that the inside container may have been damaged, care should be taken to avoid inhalation, ingestion, or contact with the Class 7 (radioactive) material. Any loose Class 7 (radioactive) materials should be left in a segregated area and held pending disposal instructions, from qualified persons.

[Amdt. 174–26, 41 FR 16092, Apr. 15, 1976, as amended by Amdt. 174–42, 48 FR 10245, Mar. 10, 1983; Amdt. 174–61, 51 FR 34987, Oct. 1, 1986; Amdt. 174–65, 53 FR 38274, Sept. 29, 1988; Amdt. 174–68, 55 FR 52684, Dec. 21, 1990; Amdt. 174–80, 60 FR 50332, Sept. 28, 1995]

PART 175—CARRIAGE BY AIRCRAFT

Subpart A—General Information and Regulations

Sec.
175.1 Purpose and scope.
175.3 Unacceptable hazardous materials shipments.
175.5 Applicability.
175.10 Exceptions.
175.20 Compliance and training.
175.25 Notification at air passenger facilities of hazardous materials restrictions.
175.26 Notification at cargo facilities of hazardous materials requirements.
175.30 Accepting and inspecting shipments.
175.31 Reports of discrepancies.
175.33 Notification of pilot-in-command.
175.35 Shipping papers aboard aircraft.
175.40 Keeping and replacement of labels.

Subpart B—Loading, Unloading and Handling

175.75 Quantity limitations aboard aircraft.
175.78 Stowage compatibility of cargo.
175.79 Orientation of cargo.
175.81 Securing of packages containing hazardous materials.
175.85 Cargo location.
175.88 Inspection of unit load devices.
175.90 Damaged shipments.

Subpart C—Specific Regulations Applicable According to Classification of Material

175.305 Self-propelled vehicles.
175.310 Transportation of flammable liquid fuel in small, passenger-carrying aircraft.
175.320 Cargo aircraft only; only means of transportation.

175.630 Special requirements for Division 6.1 (poisonous) materials and materials in Division 6.2 (etiologic or infectious substances).
175.700 Special limitations and requirements for Class 7 (radioactive) materials.
175.701 Separation distance requirements for packages containing Class 7 (radioactive) materials in passenger-carrying aircraft.
175.702 Requirements for carriage of packages containing Class 7 (radioactive) materials in a cargo aircraft only.
175.703 Other special requirements for the acceptance and carriage of packages containing Class 7 (radioactive) materials.
175.704 Plutonium shipments.
175.705 Inspection of aircraft for contamination by Class 7 (radioactive) materials.

AUTHORITY: 49 U.S.C. 5101–5127; 49 CFR 1.53.

SOURCE: Amdt. 175–1, 41 FR 16106, Apr. 15, 1976, unless otherwise noted.

Subpart A—General Information and Regulations

§175.1 Purpose and scope.

This part prescribes requirements, in addition to those contained in parts 171, 172 and 173 of this subchapter, applicable to aircraft operators transporting hazardous materials aboard (including attached to or suspended from) aircraft.

[Amdt. 175–15, 45 FR 35332, May 27, 1980]

§175.3 Unacceptable hazardous materials shipments.

Hazardous materials that are not prepared for shipment in accordance with this subchapter may not be accepted for transportation or transported aboard an aircraft.

[Amdt. 175–25, 47 FR 54822, Dec. 6, 1982]

§175.5 Applicability.

(a) This part applies to the acceptance for transportation, loading and transportation of hazardous materials in any aircraft in the United States and in aircraft of United States registry anywhere in air commerce. This part does not apply to:

(1) Aircraft owned and operated by a government when not engaged in carrying persons or property for commercial purposes;

(2) Aircraft which are not owned by a government nor engaged in carrying persons or property for commercial purposes but which are under the exclusive direction and control of a government for a period of not less than 90 days as specified in a written contract or lease. An aircraft is under the exclusive direction and control of a government when the government exercises responsibility for:

(i) Approving crew members and determining that they are qualified to operate the aircraft;

(ii) Determining the airworthiness and directing maintenance of the aircraft; and

(iii) Dispatching the aircraft, including the times of departure, airports to be used, and type and amount of cargo to be carried;

(3) Aircraft of United States registry under lease to and operated by foreign nationals outside the United States if:

(i) Hazardous materials forbidden aboard aircraft by §172.101 of this subchapter are not carried on the aircraft; and

(ii) Other hazardous materials are carried in accordance with the regulations of the State (nation) of the aircraft operator.

[Amdt. 175–15, 45 FR 35332, May 27, 1980]

§175.10 Exceptions.

(a) This subchapter does not apply to:

(1) Aviation fuel and oil in tanks that are in compliance with the installation provisions of 14 CFR, chapter 1.

(2) Hazardous materials required aboard an aircraft in accordance with the applicable airworthiness requirements and operating regulations. Unless otherwise approved by the Associate Administrator for Hazardous Materials Safety, items of replacement for such hazardous materials must be transported in accordance with this subchapter except that—

(i) In place of the required packagings, packagings specially designed for the transport of aircraft spares and supplies may be used, provided such packagings provide at least an equivalent level of protection to those that would be required by this subchapter;

(ii) Aircraft batteries are not subject to quantity limitations such as those provided in §172.101 or §175.75(a) of this subchapter; and,

(iii) A tire assembly with a serviceable tire is not subject to the provisions of this subchapter provided the tire is not inflated to a gauge pressure exceeding the maximum rated pressure for that tire.

(3) Hazardous materials loaded and carried in hoppers or tanks of aircraft certificated for use in aerial seeding, dusting, spraying, fertilizing, crop improvement, or pest control, to be dispensed during such an operation.

(4) Non-radioactive medicinal and toilet articles (including aerosols) carried by a crew member or passenger in checked or carry-on baggage. Also aerosols in Division 2.2, with no subsidiary risk, for sporting or home use, when carried in checked baggage only, when:

(i) The total capacity of all the containers used by a crewmember or passenger does not exceed 2 kg (70 net weight ounces) or 2 liters (68 fluid ounces);

(ii) The capacity of each container other than an aerosol container does not exceed 470 ml (16 fluid ounces) or 0.5 kg (1.1 pound) of material.

(5) Small-arms ammunition for personal use carried by a crewmember or passenger in his baggage (excluding carry-on baggage) if securely packed in fiber, wood or metal boxes, or other packagings specifically designed to carry small amounts of ammunition. This paragraph does not apply to persons traveling under the provisions of 14 CFR 108.11 (a) and (b).

(6) [Reserved]

(7) Oxygen, or any hazardous material used for the generation of oxygen, for medical use by a passenger, which is furnished by the aircraft operator in accordance with 14 CFR 121.574 or 135.91. For purposes of this paragraph, an aircraft operator that is not a certificate holder under 14 CFR part 121 or part 135, may apply this exception in conformance with 14 CFR 121.574 or 135.91 in the same manner as required for a certificate holder.

(8) Human beings and animals with an implanted medical device, such as a heart pacemaker, that contains Class 7 (radioactive) materials or with radiopharmaceuticals that have been injected or ingested.

(9) Smoke grenades, flares, or similar devices carried only for use during a sport parachute jumping activity.

(10) Personal smoking materials intended for use by any individual when carried on his person except lighters with flammable liquid reservoirs and containers containing lighter fluid for use in refilling lighters.

(11) Smoke grenades, flares, and pyrotechnic devices affixed to aircraft carrying no person other than a required flight crewmember during any flight conducted at and as a part of a scheduled air show or exhibition of aeronautical skill. The affixed installation accommodating the smoke grenades, flares, or pyrotechnic devices on the aircraft must be approved by the FAA for its intended use.

(12) Hazardous materials which are loaded and carried on or in cargo aircraft only, and which are to be dispensed or expended during flight for weather control, enviromental restoration or protection, forest preservation and protection, flood control, avalanche control purposes, or routine quality control testing of special fireworks manufactured for the Department of Defense, when the following requirements are met:

(i) Operations may not be conducted over densely populated areas, in a congested airway, or near any airport where air carrier passenger operations are conducted.

(ii) Each operator shall prepare and keep current a manual containing operational guidelines and handling procedures, for the use and guidance of flight, maintenance, and ground personnel concerned in the dispensing or expending of hazardous materials. The manual must be approved by the FAA Civil Aviation Security Office responsible for the operator's overall aviation security program or the FAA Civil Aviation Security Office in the region where the operator is located. The manual must be approved by the FAA Civil Aviation Security Field Office responsible for reviewing the operator's hazardous materials program or the FAA Civil Aviation Security Field Office in the region where the operator is located. Each operation must be conducted in accordance with the manual.

(iii) No person other than a required flight crewmember, FAA inspector, or person necessary for handling or dispensing the hazardous material may be carried on the aircraft.

(iv) The operator of the aircraft must have advance permission from the owner of any airport to be used for the dispensing or expending operation.

(v) When dynamite and blasting caps are carried for avalanche control flights, the explosives must be handled by, and at all times be under the control of, a qualified blaster. When required by State or local authority, the blaster must be licensed and the State or local authority must be identified in writing to the FAA Civil Aviation Security Field Office responsible for reviewing the operator's hazardous materials program or the FAA Civil Aviation Security Field Office in the region where the operator is located.

(vi) When special fireworks aerial illuminating flares, manufactured specifically for the DOD, are carried for in-flight routine quality control testing, the fireworks must be handled by, and at all times be under the control of, a qualified person who has been trained in accordance with a program approved by the local FAA Civil Aviation Security Field Office. The aircraft must be specially modified to conduct the testing operation and must be specifically approved for such operations by the local FAA Civil Aviation Security Field Office before the flight.

(13) Carbon dioxide, solid (dry ice) when:

(i) In quantities not exceeding 2.3 kg (5.07 pounds) per package packed as prescribed by §173.217 of this subchapter and used as a refrigerant for the contents of the package. The package must be marked with the name of the contents being cooled, the net weight of the dry ice or an indication that the net weight is 2.3 kg (5.07 pounds) or less, and also marked ''Carbon Dioxide, Solid'' or ''Dry Ice'';

(ii) Intended for use in food and beverage service aboard aircraft; or

(iii) In quantities not exceeding 2 kg (4.4 pounds) per passenger when used to pack perishables in carry-on baggage provided the package permits the release of carbon dioxide gas.

(14) A transport incubator unit necessary to protect life or an organ preservation unit necessary to protect human organs provided:

(i) The compressed gas used to operate the unit is in an authorized DOT specification cylinder and is marked, labeled, filled and maintained as prescribed by this subchapter;

(ii) Each battery used in the operation of the unit is of the nonspillable type;

(iii) The unit is constructed so that valves, fittings, and gauges are protected from damage;

(iv) The pilot in command is advised when the unit is on board, and when it is intended for use;

(v) The unit is accompanied by a person qualified to operate it;

(vi) The unit is secured in the aircraft in a manner so as not to restrict access to or use of any required emergency or regular exit or of the aisle in the passenger compartment; and,

(vii) Smoking within 3 m (10 feet) of the unit is prohibited.

(15) Alcoholic beverages, perfumes, colognes, and liquefied gas lighters that have been examined by the Bureau of Explosives (B of E) and approved by the Associate Administrator for Hazardous Materials Safety, carried aboard a passenger-carrying aircraft by the operator for use or sale on the aircraft.

(16) Alcoholic beverages not exceeding 70% alcohol by volume, perfumes and colognes, purchased through duty free sales, carried by passengers or crew as carry-on baggage.

(17) [Reserved]

(18) Carbon dioxide gas cylinders worn by passengers for the operation of mechanical limbs and spare cylinders of a similar size for the same purpose in sufficient quantities to ensure an adequate supply for the duration of the journey.

(19) A wheelchair or other battery-powered mobility aid equipped with a nonspillable battery, when carried as checked baggage, provided that—

(i) The battery meets the provisions of §173.159(d) for nonspillable batteries;

(ii) Visual inspection including, where necessary, removal of the battery, reveals no obvious defects (however, removal of the battery from the

housing should be performed by qualified airline personnel only);

(iii) The battery is disconnected and terminals are insulated to prevent short circuits; and

(iv) The battery is securely attached to the wheelchair or mobility aid, is removed and placed in a strong, rigid packaging that is marked ''NONSPILLABLE BATTERY'' (unless fully enclosed in a rigid housing that is properly marked), or is handled in accordance with paragraph (a)(20)(iv) of this section.

(20) A wheelchair or other battery-powered mobility aid equipped with a spillable battery, when carried as checked baggage, provided that—

(i) Visual inspection including, where necessary, removal of the battery, reveals no obvious defects (however, removal of the battery from the housing should be performed by qualified airline personnel only);

(ii) The battery is disconnected and terminals are insulated to prevent short circuits;

(iii) The pilot-in-command is advised, either orally or in writing, prior to departure, as to the location of the battery aboard the aircraft; and

(iv) The wheelchair or mobility aid is loaded, stowed, secured and unloaded in an upright position or the battery is removed, the wheelchair or mobility aid is carried as checked baggage without further restriction, and the removed battery is carried in a strong, rigid packaging under the following conditions:

(A) The packaging must be leak-tight and impervious to battery fluid. An inner liner may be used to satisfy this requirement if there is absorbent material placed inside of the liner and the liner has a leakproof closure;

(B) The battery must be protected against short circuits, secured upright in the packaging, and be packaged with enough compatible absorbent material to completely absorb liquid contents in the event of rupture of the battery; and

(C) The packaging must be labeled with a CORROSIVE label, marked to indicate proper orientation, and marked with the words ''Battery, wet, with wheelchair.''

(21) Hair curlers containing hydrocarbon gas, no more than one per passenger or crew member, provided that the safety cover is securely fitted over the heating element. Gas refills for such curlers are not permitted in checked or carry-on baggage.

(22) A mercurial barometer or thermometer carried as carry-on-baggage only, by a representative of a government weather bureau or similar official agency, provided that individual advises the operator of the presence of the barometer or thermometer in his baggage. The barometer or thermometer must be packaged in a strong outer packaging having sealed inner liner or bag of strong, leak proof and puncture-resistant material impervious to mercury, which will prevent the escape of mercury from the package irrespective of its position. The pilot-in-command must be informed of the presence of any such barometer or thermometer by the operator of the aircraft.

(23) With the approval of the operator of the aircraft and as carry-on baggage, electrically powered heat-producing articles (e.g., battery-operated equipment, such as underwater torches and soldering equipment), which, if accidentally activated, will generate extreme heat and can cause fire. The heat-producing component, or the energy source, must be removed so as to prevent unintentional functioning during transport.

(24) With the approval of the operator and as checked baggage, a small chemical oxygen generator for personal use, one per person, that meets the following requirements:

(i) The generator, without its packaging, must be capable of withstanding a 1.8 m (5.9 feet) drop test onto a rigid, non-resilient, flat and horizontal surface, in the position most likely to cause damage, without loss of its contents and without actuation;

(ii) The generator must be equipped with an actuating device with at least two positive means of preventing unintentional actuation;

(iii) The generator must be well insulated and, when it is actuated at a temperature of 20 °C (68 °F), the temperature of any external surface of the generator must not exceed 100 °C (212 °F);

(iv) The generator must be in the manufacturer's original packaging and

this must include a sealed outer wrapping or clear evidence that the generator has not been tampered with; and

(v) The generator packaging must be marked to indicate that the package meets the requirements of this paragraph (e.g., conforms with 49 CFR 175.10(a)(24)).

(25) With approval of the aircraft operator, one small carbon dioxide cylinder fitted into a self-inflating lifejacket, plus one spare cartridge, may be carried by a passenger or crew member in checked or carry-on baggage.

(26) A small medical or clinical mercury thermometer for personal use, when carried in protective cases by passengers or crew members.

[Amdt. 175–1, 41 FR 16106, Apr. 15, 1976]

EDITORIAL NOTE: For FEDERAL REGISTER citations affecting §175.10, see the List of CFR Sections Affected appearing in the Finding Aids section of this volume.

§175.20 Compliance and training.

(a) Unless this subchapter specifically provides that another person shall perform a particular duty, each operator shall comply with all applicable requirements in parts 106, 171, 172, and 175 of this chapter and shall ensure each of its hazmat employees receive training in relation thereto. (See also 14 CFR 121.135, 121.401, 121.433a, 135.323, 135.327 and 135.333.)

(b) A carrier may not transport a hazardous material by aircraft unless each of its hazmat employees involved in that transportation is trained as required by subpart H of part 172 of this subchapter.

[Amdt. 175–48, 57 FR 20953, May 15, 1992]

§175.25 Notification at air passenger facilities of hazardous materials restrictions.

(a) Each aircraft operator who engages in for-hire transportation of passengers shall display notices of the requirements applicable to the carriage of hazardous materials aboard aircraft, and the penalties for failure to comply with those requirements. Each notice must be legible, and be prominently displayed so that it can be seen by passengers in locations where the aircraft operator issues tickets, checks baggage, and maintains aircraft boarding areas.

(1) Each notice must contain the following information:

Federal law forbids the carriage of hazardous materials aboard aircraft in your luggage or on your person.

A violation can result in penalties of up to $25,000 and 5 years imprisonment. (49 U.S.C. 1809)

Hazardous materials include explosives, compressed gases, flammable liquids and solids, oxidizers, poisons, corrosives and radioactive materials.

Examples: Paints, lighter fluid, fireworks, tear gases, oxygen bottles, and radio-pharmaceuticals.

There are special exceptions for small quantities (up to 75 ounces total) of medicinal and toilet articles carried in your luggage and certain smoking materials carried on your person.

For further information contact your airline representative.

(2) The information contained in paragraph (a)(1) of this section must be printed:

(i) In legible Engish;

(ii) In lettering of at least 1 cm (0.4 inch) in height for the first three paragraphs and 6.0 mm (0.2 inch) in height for the last three paragraphs; and

(iii) On a background of contrasting color.

(3) Size and color of the notice are optional. Additional information, if not inconsistent with required information, may be included.

(b) [Reserved]

[Amdt. 175–12, 45 FR 13091, Feb. 28, 1980, as amended by 175–23, 47 FR 43066, Sept. 30, 1982; Amdt. 175–47, 55 FR 52685, Dec. 21, 1990; Amdt. 175–50, 58 FR 50505, Sept. 27, 1993]

§175.26 Notification at cargo facilities of hazardous materials requirements.

(a) After September 30, 1994, each person who engages in the acceptance or transport of cargo for transportation by aircraft shall display notices, at each facility where cargo is accepted, to persons offering such cargo of the requirements applicable to the carriage of hazardous materials aboard aircraft, and the penalties for failure to comply with those requirements. Each notice must be legible, and be prominently displayed so that it can be seen. At a minimum, each notice must communicate the following information:

(1) Cargo containing hazardous materials (dangerous goods) for transportation by aircraft must be offered in accordance with the Federal Hazardous Materials Regulations (49 CFR parts 171–180).

(2) A violation can result in civil penalties of up to $25,000 and criminal penalties of up to $500,000 and 5 years imprisonment.

(3) Hazardous materials (dangerous goods) include explosives, compressed gases, flammable liquids and solids, oxidizers, poisons, corrosives and radioactive materials.

(b) The information contained in paragraph (a) of this section must be printed:

(1) Legibly in English, and, where cargo is accepted outside of the United States, in the language of the host country; and

(2) On a background of contrasting color.

(c) Size and color of the notice are optional. Additional information, examples, or illustrations, if not inconsistent with required information, may be included.

(d) Exceptions: Display of a notice required by paragraph (a) of this section is not required at:

(1) An unattended location (e.g., a drop box) provided a general notice advising customers of a prohibition on shipments of hazardous materials through that location is prominently displayed; or

(2) A customer's facility where hazardous materials packages are accepted by a carrier.

][Amdt. 175–50, 58 FR 50505, Sept. 27, 1993]

§ 175.30 Accepting and inspecting shipments.

(a) No person may accept a hazardous material for transportation aboard an aircraft unless the hazardous material is:

(1) Authorized, and is within the quantity limitations specified for carriage aboard aircraft according to § 172.101 of this subchapter or as otherwise specifically provided by this subchapter.

(2) Described and certified on a shipping paper prepared in duplicate in accordance with subpart C of part 172 or as authorized by § 171.11 of this subchapter. The originating aircraft operator must retain one copy of each shipping paper for 90 days;

(3) Labeled and marked in accordance with subparts D and E of part 172 or as authorized in § 171.11 of this subchapter, and placarded (when required) in accordance with subpart F of part 172 of this subchapter; and,

(4) Labeled with a ''CARGO AIRCRAFT ONLY'' label (see § 172.448 of this subchapter) if the material as presented is not permitted aboard passenger-carrying aircraft.

(b) Except as provided in paragraph (d) of this section, no person may carry a hazardous material in a package, outside container, or overpack aboard an aircraft unless the package, outside container, or overpack is inspected by the operator of the aircraft immediately before placing it:

(1) Aboard the aircraft; or,

(2) In a unit load device or on a pallet prior to loading aboard the aircraft.

(c) A hazardous material may only be carried aboard an aircraft if, based on the inspection prescribed in paragraph (b) of this section, the operator determines that the package, outside container, or overpack containing the hazardous material:

(1) Has no holes, leakage or other indication that its integrity has been compromised; and

(2) For Class 7 (radioactive) materials, does not have a broken seal, except that packages contained in overpacks need not be inspected for seal integrity.

(d) The requirements of paragraphs (b) and (c) of this section do not apply to:

(1) An ORM–D material packed in a freight container and offered for transportation by one consignor;

(2) Dry ice (carbon dioxide, solid); or

(e) An overpack containing packages of hazardous materials may be accepted only if the operator has taken all reasonable steps to establish that:

(1) The overpack does not contain a package bearing the ''CARGO AIRCRAFT ONLY'' label unless—

(i) The overpack affords clear visibility of and easy access to the package; or

(ii) The package contains a material which may be carried inaccessibly under the provisions of §175.85(c)(1); or

(iii) Not more than one package is overpacked.

(2) The proper shipping names, identification numbers, labels and special handling instructions appearing on the inside packages are clearly visible or reproduced on the outside of the overpack, and

(3) Has determined that a statement to the effect that the inside packages comply with the prescribed specifications appears on the outside of the overpack, when specification packagings are prescribed.

[Amdt. 175–1, 41 FR 16106, Apr. 15, 1976, as amended by Amdt. 175–12, 45 FR 13091, Feb. 28, 1980; Amdt. 175–17, 45 FR 68654, Oct. 11, 1980; Amdt. 175–25, 47 FR 54822, Dec. 6, 1982; Amdt. 175–34, 50 FR 48420, Nov. 25, 1985; Amdt. 175–37, 51 FR 5974, Feb. 18, 1986; Amdt. 175–39, 51 FR 44791, Dec. 12, 1986; Amdt. 175–47, 55 FR 52685, Dec. 21, 1990]

§175.31 Reports of discrepancies.

(a) Each person who discovers a discrepancy, as defined in paragraph (b) of this section, relative to the shipment of a hazardous material following its acceptance for transportation aboard an aircraft shall, as soon as practicable, notify the nearest FAA Civil Aviation Security Office by telephone and shall provide the following information:

(1) Name and telephone number of the person reporting the discrepancy.

(2) Name of the aircraft operator.

(3) Specific location of the shipment concerned.

(4) Name of the shipper.

(5) Nature of discrepancy.

(b) Discrepancies which must be reported under paragraph (a) of this section are those involving hazardous materials which are improperly described, certified, labeled, marked, or packaged, in a manner not ascertainable when accepted under the provisions of §175.30(a) of this subchapter, including:

(1) Package which are found to contain hazardous materials:

(i) Other than as described or certified on shipping papers;

(ii) In quantities exceeding authorized limits;

(iii) In inside containers which are not authorized or have improper closures;

(iv) In inside containers not oriented as shown by package markings;

(v) With insufficient or improper absorption materials, when required; or

(2) Packages or baggage which are found to contain hazardous materials subsequent to their being offered and accepted as other than hazardous materials.

[Amdt. 175–15, 45 FR 35332, May 27, 1980, as amended by Amdt. 175–41, 52 FR 36672, Sept. 30, 1987]

§175.33 Notification of pilot-in-command.

(a) Except as provided in §175.10, when a hazardous material subject to the provisions of this subchapter is carried in an aircraft, the operator of the aircraft shall provide the pilot-in-command at least the following information in writing as early as practicable prior to departure:

(1) The proper shipping name, hazard class and identification number of the material as specified in §172.101 of this subchapter or the ICAO Technical Instructions. In the case of Class 1 material, the compatibility group letter also must be shown. If a hazardous material is described by the proper shipping name, hazard class, and identification number appearing in:

(i) Section 172.101 of this subchapter, any additional description requirements provided in §§172.202 and 172.203 of this subchapter must also be shown in the notification.

(ii) The ICAO Technical Instructions, any additional information required to be shown on shipping papers by §171.11 of this subchapter must also be shown in the notification.

(2) The total number of packages;

(3) The net quantity or gross weight, as applicable, for each package except those containing Class 7 (radioactive) materials and those for which there is no limit imposed on the maximum net quantity per package;

(4) The location of the packages aboard the aircraft;

(5) Confirmation that no damaged or leaking packages have been loaded on the aircraft;

(6) For Class 7 (radioactive) materials, the number of packages, overpacks or freight containers their category, transport index (if applicable), and their location aboard the aircraft;

(7) Confirmation that the package must be carried on cargo aircraft only if its transportation aboard passenger-carrying aircraft is forbidden; and

(8) An indication, when applicable, that a hazardous material is being carried under terms of an exemption.

(b) A copy of the written notification to pilot-in-command shall be readily available to the pilot-in-command during flight. Emergency response information required by subpart G of part 172 of this subchapter must be maintained in the same manner as the written notification to pilot-in-command during transport of the hazardous material aboard the aircraft.

[Amdt. 175–25, 47 FR 54823, Dec. 6, 1982, as amended by Amdt. 175–30, 48 FR 53713, Nov. 29, 1983; Amdt. 175–32, 49 FR 45750, Nov. 20, 1984; Amdt. 175–35, 50 FR 49394, Dec. 2, 1985; Amdt. 175–45, 55 FR 875, Jan. 10, 1990; Amdt. 175–47, 55 FR 52685, Dec. 21, 1990; Amdt. 175–52, 59 FR 67518, Dec. 29, 1994]

§ 175.35 Shipping papers aboard aircraft.

(a) A copy of the shipping papers required by § 175.30(a)(2) must accompany the shipment it covers during transportation aboard an aircraft.

(b) The documents required by paragraph (a) of this section and § 175.33 may be combined into one document if it is given to the pilot-in-command before departure of the aircraft.

§ 175.40 Keeping and replacement of labels.

(a) Aircraft operators who engage in the transportation of hazardous materials must keep an adequate supply of the labels specified in subpart E of part 172 of this subchapter, on hand at each location where shipments are loaded aboard aircraft.

(b) Lost or detached labels for packages of hazardous materials must be replaced in accordance with the information provided on the shipping papers.

Subpart B—Loading, Unloading and Handling

§ 175.75 Quantity limitations aboard aircraft.

(a) Except as provided in § 175.85(c)(3), no person may carry on an aircraft:

(1) A hazardous material except as permitted by this subchapter:

(2) More than 25 kg (55 pounds) net weight of hazardous material (and in addition thereto, 75 kg (165 pounds) net weight of Division 2.2 (non-flammable compressed gas) materials permitted to be carried aboard passenger-carrying aircraft:

(i) In an inaccessible cargo compartment,

(ii) In any freight container within an accessible cargo compartment, or

(iii) In any accessible cargo compartment in a cargo aircraft only in a manner that makes it inaccessible unless in a freight container;

(3) Packages containing Class 7 (radioactive) materials when their combined transport index number (determined by adding together the transport index numbers shown on the labels of the individual packages and/or overpacks):

(i) In passenger carrying aircraft, exceeds 50.0 or, for any single package, exceeds 3.0, or

(ii) In cargo aircraft only, exceeds 200.00 (for fissile Class 7 (radioactive) materials, see § 175.702(b)(2)(iv)) or, for any single package, exceeds 10.0.

(b) No limitation applies to the number of packages of Class 9 (miscellaneous hazardous) materials, or ORM–D materials aboard an aircraft.

[Amdt. 175–1A, 41 FR 40686, Sept. 20, 1976, as amended by Amdt. 175–13, 45 FR 20101, Mar. 27, 1980; Amdt. 175–25, 47 FR 54823, Dec. 6, 1982; Amdt. 175–29, 48 FR 50461, Nov. 1, 1983; Amdt. 175–47, 55 FR 52685, Dec. 21, 1990]

§ 175.78 Stowage compatibility of cargo.

(a) For stowage on an aircraft, in a cargo facility, or at any other area at an airport designated for the stowage of hazardous materials, packages containing hazardous materials which might react dangerously with one another may not be placed next to each other or in a position that would allow a dangerous interaction in the event of

leakage. As a minimum, the segregation prescribed in the following Table must be maintained.

TABLE 1

	A	B	C	D	E	F	G
A Explosives and Blasting Agents or ICAO Class 1	Note 3	Note 4	Note 4	Note 4	Note 4	Note 4	X
B Compressed gases or ICAO Class 2	Note 4						
C Flammable liquids or ICAO Class 3	Note 4					X	
D Flammable liquids and solids (labeled SPONTANEOUSLY COMBUSTIBLE) or ICAO Division 4.2.	Note 4					X	X
E Flammable solids (labeled DANGEROUS WHEN WET) or ICAO Division 4.3	Note 4					X	X
F Oxidizers or ICAO Division 5.1 and Organic peroxides or ICAO Division 5.2	Note 4		X	X	X		X
G Corrosive materials or ICAO Class 8	X			X	X	X	

Note 1: The letters across the top of the Table have the same meaning as the letters along the left side of the Table.

Note 2: An ''X'' at the intersection of a row and a column in the Table means that packages containing the indicated classes of hazardous materials may not be stowed next to or in contact with each other, or in a position which would allow interaction in the event of leakage of the contents.

Note 3: For import or export shipment, explosives other than explosives of ICAO Division 1.4, Compatibility Group S, that do not belong to the same compatibility group according to the ICAO Technical Instructions may not be stowed together, except that compatibility groups C, D and E may be stowed together. Explosives of ICAO Division 1.4, Compatibility Group S may be stowed with explosives of all compatibility groups with the exception of A and L.

Note 4: Explosives, other than safety explosives (ICAO Division 1.4, Compatibility Group S) must not be stowed together with this class.

(b) No person may stow a package labeled BLASTING AGENT on an aircraft next to, or in a position that will allow contact with a package of special fireworks or railway torpedoes.

[Amdt. 175–1, 41 FR 16106, Apr. 15, 1976, as amended by Amdt. 175–8, 44 FR 31184, May 31, 1979; Amdt. 175–22, 47 FR 24587, June 7, 1982; Amdt. 175–25, 47 FR 54823, Dec. 6, 1982; Amdt. 175–30, 48 FR 53713, Nov. 29, 1983; Amdt. 175–50, 58 FR 50505, Sept. 27, 1993]

§175.79 Orientation of cargo.

(a) A package containing hazardous materials marked ''THIS SIDE UP'' or ''THIS END UP'', or with arrows to indicate the proper orientation of the package, must be stored and loaded aboard an aircraft in accordance with such markings.

(b) A package containing liquid hazardous materials not marked as indicated in paragraph (a) of this section, must be stored and loaded with closures up (other than side closures in addition to top closures).

[Amdt. 175–25, 47 FR 54823, Dec. 6, 1982]

§175.81 Securing of packages containing hazardous materials.

(a) Packages containing hazardous materials must be secured in an aircraft in a manner that will prevent any movement in flight which would result in damage to or change in the orientation of the packages.

(b) Packages containing Class 7 (radioactive) materials must be secured in a manner that insures that the separation requirements of §§175.701 and 175.702 will be maintained at all times during flight.

[Amdt. 175–25, 47 FR 54823, Dec. 6, 1982, as amended by Amdt. 175–47, 55 FR 52685, Dec. 21, 1990]

§175.85 Cargo location.

(a) Except as provided in §175.10, no person may carry a hazardous material subject to the requirements of this subchapter in the cabin of a passenger-carrying aircraft or on the flight deck of any aircraft. Hazardous materials may be carried in a main deck cargo compartment of a passenger-aircraft provided that the compartment is inaccessible to passengers and that it meets all certification requirements for a Class B aircraft cargo compartment as provided in 14 CFR 25.857(b).

(b) Each package containing a hazardous material acceptable only for cargo aircraft must be loaded in such a manner that a crew member or other authorized person can see, handle and when size and weight permit, separate such packages from other cargo during flight.

(c) Notwithstanding the provisions of paragraph (b) of this section:

(1) When packages of the following hazardous materials are carried on cargo aircraft only, they may be carried in a location which is inaccessible to a crewmember during flight and are not subject to the weight limitation specified in paragraph (a)(2) of §175.75 of this subchapter.

(i) Class 7 (radioactive) materials,

(ii) Division 6.1 (poisonous) materials (except those labeled FLAMMABLE),

(iii) Materials in Division 6.2 (etiologic or infectious substances),

(iv) Class 3 (flammable liquid) materials with a flashpoint above 23 °C (73 °F) that do not meet the definition of another hazardous class,

(v) Class 9 (miscellaneous hazardous) materials, and ORM–D materials.

(2) When packages of hazardous materials acceptable for cargo-only or passenger-carrying aircraft are carried on cargo aircraft only where other means of transportation are impracticable or not available, packages may be carried in accordance with procedures approved in writing by the FAA Air Transportation Security Field Office responsible for the operator's overall aviation security program or the FAA Air Transportation Security Division in the region where the operator is located.

(3) When packages of hazardous materials acceptable for cargo-only or passenger-carrying aircraft are carried on small, single pilot, cargo aircraft only being used where other means of transportation are impracticable or not available, they may be carried without quantity limitation as specified in §175.75 in a location that is not accessible to the pilot if:

(i) No person other than the pilot, an FAA inspector, the shipper or consignee of the material or a representative of the shipper or consignee so designated in writing, or a person necessary for handling the material is carried on the aircraft;

(ii) The pilot is provided with written instructions on characteristics and proper handling of the materials; and

(iii) Whenever a change of pilots occurs while the material is on board, the new pilot is briefed under a hand-to-hand signature service provided by the operator of the aircraft.

(d) [Reserved]

(e) No person may carry a material subject to the requirements of this subchapter that is acceptable for carriage in a passenger-carrying aircraft (other than magnetized materials) unless it is located in the aircraft in a place that is inaccessible to persons other than crew-members.

(f) Paragraphs (a) and (e) of this section do not apply to a person operating an aircraft under § 175.310 which, because of its size and configuration, makes it impossible for that person to comply.

(g) No person may load magnetized material (which might cause an erroneous magnetic compass reading) on an aircraft, in the vicinity of a magnetic compass, or compass master unit, that is a part of the instrument equipment of the aircraft, in a manner that affects its operation. If this requirement cannot be met, a special aircraft swing and compass calibration may be made.

[Amdt. 175–1, 41 FR 16106, Apr. 15, 1976]

EDITORIAL NOTE: For FEDERAL REGISTER citations affecting § 175.85, see the List of CFR Sections Affected appearing in the Finding Aids section of this volume.

§ 175.88 Inspection of unit load devices.

A unit load device may not be loaded on an aircraft unless the device has been inspected and found to be free from any evidence of leakage from, or damage to, any package containing hazardous materials.

[Amdt. 175–25, 47 FR 54824, Dec. 6, 1982]

§ 175.90 Damaged shipments.

(a) Packages or overpacks containing hazardous materials must be inspected for damage or leakage after being unloaded from an aircraft. When packages or overpacks containing hazardous materials are carried in a unit load device, the area where the unit load device was stowed must be inspected for evidence of leakage or contamination immediately upon removal of the unit load device from the aircraft, and the packages or overpacks inspected for evidence of damage or leakage when the unit load device is unloaded. In the event of leakage or suspected leakage, the compartment in which the package, overpack, or unit load device was carried must be inspected for contamination and any dangerous level of contamination removed.

(b) Except as provided for in § 175.700, the operator of an aircraft shall remove from the aircraft any package subject to this subchapter that appears to be damaged or leaking. In the case of a package which appears to be leaking, the operator must insure that the remainder of the packages in the same shipment are in proper condition for transport aboard the aircraft and that no other package has been contaminated.

(c) No person shall place a package that is damaged or appears to be damaged or leaking aboard an aircraft subject to this part.

(d) If a package containing a material in Division 6.2 (etiologic or infectious substance) is found to be damaged or leaking, the person finding the package shall:

(1) Avoid handling the package or keep handling to a minimum;

(2) Inspect packages adjacent to the leaking package for contamination and withhold from further transportation any contaminated packages until it is ascertained that they can be safety transported;

(3) Comply with the reporting requirement of § 171.15 of this subchapter; and

(4) Notify the consignor or consignee.

[Amdt. 175–25, 47 FR 54824, Dec. 6, 1982, as amended by Amdt. 175–47, 55 FR 52685, Dec. 21, 1990]

Subpart C—Specific Regulations Applicable According to Classification of Material

§175.305 Self-propelled vehicles.

(a) Self-propelled vehicles are exempt from the drainage requirements of §173.220 of this subchapter when carried in aircraft designed or modified for vehicle ferry operations and when all of the following conditions are met:

(1) Authorization for this type operation has been given by the appropriate authority in the government of the country in which the aircraft is registered;

(2) Each vehicle is secured in an upright position;

(3) Each fuel tank is filled in a manner and only to a degree that will preclude spillage of fuel during loading, unloading, and transportation; and

(4) Each area or compartment in which a self-propelled vehicle is being transported is suitably ventilated to prevent the accumulation of fuel vapors.

(b) [Reserved]

[Amdt. 175–1, 41 FR 16106, Apr. 15, 1976, as amended by Amdt. 175–12, 45 FR 13091, Feb. 28, 1980; Amdt. 175–25, 47 FR 54824, Dec. 6, 1982; Amdt. 175–47, 55 FR 52685, Dec. 21, 1990]

§175.310 Transportation of flammable liquid fuel in small, passenger-carrying aircraft.

A small aircraft or helicopter operated entirely within the State of Alaska or into a remote area elsewhere in the United States may carry, in other than scheduled passenger operations, not more than 76 liters (20 gallons) of flammable liquid fuel, if:

(a) Transportation by air is the only practical means of providing suitable fuel;

(b) The flight is necessary to meet the needs of a passenger;

(c) The fuel is carried in metal containers that are either:

(1) In strong tight metal containers of not more than 20 liters (5.3 gallons) capacity, each packed inside a UN 4G fiberboard box or each packed inside a UN 4C1 wooden box, or in the case of a small aircraft in Alaska, each packed inside a wooden box of at least 1.3 cm (0.51 inch) thickness;

(2) Airtight, leakproof, inside containers of not more than 40 liters (11 gallons) capacity and of at least 28-gauge metal, each packed inside a UN 4C1 wooden box or, in the case of a small aircraft in Alaska, each packed inside a wooden box of at least 1.3 cm (0. 51 inch) thickness;

(3) UN 1A1 steel drums of not more than 20 liters (5.3 gallons) capacity; or

(4) Fuel tanks attached to flammable liquid fuel powered equipment under the following conditions:

(i) Each piece of equipment is secured in an upright position;

(ii) Each fuel tank is filled in a manner that will preclude spillage of fuel during loading, unloading, and transportation; and

(d) In the case of a helicopter, the fuel is carried on external cargo racks;

(e) Each area or compartment in which the fuel is loaded is suitably ventilated to prevent the accumulation of fuel vapors;

(f) Before each flight, the pilot-in-command:

(1) Informs each passenger of the location of the fuel and the hazards involved; and

(2) Prohibits smoking, lighting matches, the carrying of any lighted cigar, pipe, cigarette or flame, and the use of anything that might cause an open flame or spark, while loading or unloading or in flight; and

(g) Fuel is transferred to the fuel tanks only while the aircraft is on the surface.

[Amdt. 175–1, 41 FR 16106, Apr. 15, 1976, as amended by Amdt. 175–1A, 41 FR 40686, Sept. 20, 1976; Amdt. 175–12, 45 FR 13091, Feb. 28, 1980; Amdt. 175–21, 46 FR 58696, Dec. 3, 1981; Amdt. 175–47, 55 FR 52686, Dec. 21, 1990]

§175.320 Cargo aircraft only; only means of transportation.

(a) Notwithstanding §172.101 of this subchapter, when means of transportation other than air are impracticable or not available, hazardous materials listed in the following table may be carried on a cargo aircraft only, subject to the conditions stated in the table and in paragraph (b) of this section and, when appropriate, paragraph (c) of this section:

Material	Class	Conditions
Detonators, detonator assemblies and boosters with detonators.	Division 1.1 or 1.2 (Class A) explosives.	Permitted only when no other hazardous material is aboard the aircraft.
Detonators, detonator assemblies and boosters with detonators.	Division 1.4 (Class C) explosives.	With the exception of Division 1.1 or 1.2 Detonators, detonator assemblies and boosters with detonators, permitted only when there are no Division 1.1 or 1.2 (Class A) explosives aboard aircraft.
Fuel, aviation, turbine engine; methyl alcohol; or toluene.	Class 3 (flammable liquid)	Permitted in metal drums authorized for Packing Group I or II liquid hazardous materials having rated capacities of 220 liters (58.1 gallons) or less. May not be transported in the same aircraft with Class 1 (explosives), Class 5 (oxidizer), or Class 8 (corrosive) materials. Permitted in installed tanks each having a capacity of more than 450 liters (118.9 gallons) subject to the conditions specified in paragraph (c) of this section.
Gasoline	Class 3 (flammable liquid)	Permitted in metal drum having rated capacities of 220 liters (58.1 gallons) or less. May not be transported in the same aircraft with materials classed as Class 1 (explosive), Class 5 (oxidizer), or Class 8 (corrosive) materials. Permitted in installed tanks each having a capacity of 450 liters (118.9 gallons). Subject to the conditions specified in paragraph (c) of this section.
High explosives	Class 1 (explosive) materials	Limited to Class 1 (explosive) materials to be used for blasting. Permitted only when no other cargo is aboard the aircraft or when being transported in the same aircraft with an authorized shipment of any one or more of any of the following materials to be used for blasting: Ammonium nitrate-fuel oil mixtures. Blasting explosives (Division 1.1D or 1.5D), or Blasting agent (Division 1.5D), Very insensitive explosive substances, n.o.s., or Substances, EVI, n.o.s. (Division 1.5D), Extremely insensitive explosive articles or Articles, EEI (Division 1.6N). Detonating cord. Propellant explosive (solid) (Division 1.3) (water gels only) Propellant explosive (liquid) (Division 1.3) (water gels only)
Oil n.o.s.; petroleum oil or petroleum oil, n.o.s.	Class 3 (flammable liquid)	Permitted in metal drums having rated capacities of 220 liters (58.1 gallons) or less. May not be transported in the same aircraft with materials classed as Class 1 (explosive), Class 5 (oxidizer), or Class 8 (corrosive) materials. Permitted in installed tanks each having a capacity of 450 liters (118.9 gallons). Subject to the conditions specified in paragraph (c) of this section.
Combustible liquid n.o.s	Class 3 (combustible liquid) ..	Permitted in installed tanks each having a capacity of more than 450 liters (118.9 gallons) subject to the conditions specified in paragraph (c) of this section.

(b) The following conditions apply to the carriage of hazardous materials performed under the authority of this section:

(1) No person other than a required flight crewmember, an FAA inspector, the shipper or consignee of the material or a representative of the shipper or consignee so designated in writing, or a person necessary for handling the material may be carried on the aircraft.

(2) The operator of the aircraft must have advance permission from the owner or operator of each manned airport where the material is to be loaded or unloaded or where the aircraft is to land while the material is on board. When the destination is changed after departure because of weather or other unforeseen circumstances, permission from the owner or operator of the alternate airport should be obtained as soon as practicable before landing.

(3) At any airport where the airport owner or operator or authorized representative thereof has designated a location for loading or unloading the material concerned, the material may not be loaded or unloaded at any other location.

(4) If the material concerned can create destructive forces or have lethal or injurious effects over an appreciable area as a result of an accident involving the aircraft or the material, the loading and unloading of the aircraft and its operation in takeoff, en route, and in landing must be conducted at a safe distance from heavily populated

areas and from any place of human abode or assembly.

(5) If the aircraft is being operated by a holder of a certificate issued under 14 CFR part 121, part 127 or part 135, operations must be conducted in accordance with conditions and limitations specified in the certificate holder's operations specifications or operations manual accepted by the FAA. If the aircraft is being operated under 14 CFR part 91, operations must be conducted in accordance with an operations plan accepted and acknowledged in writing by the Civil Aviation Security Office serving the operator's location or the place where the material is to be loaded.

(6) Each pilot of the aircraft must be provided written instructions stating the conditions and limitations of the operation being conducted and the name of the airport official[s] granting the advance permission required by the first sentence of paragraph (b)(2) of this section.

(7) The aircraft and the loading arrangement to be used must be approved for safe carriage of the particular materials concerned by the FAA Civil Aviation Security Office responsible for the operator's overall aviation security program or the appropriate FAA Civil Aviation Security Office serving the place where the material is to be loaded.

(8) When Division 1.1 or 1.2 (explosive) materials are carried aboard cargo aircraft only under the provisions of this section, the aircraft operator shall take all possible action to insure that routes over heavily populated areas are avoided commensurate with considerations of flight safety. During the approach and landing phase, the aircraft operator shall request appropriate vectors when under radar control to avoid heavily populated areas.

(9) During loading and unloading, no person may smoke, carry a lighted cigarette, cigar, or pipe, or operate any device capable of causing an open flame or spark within 15 m (50 feet) of the aircraft.

(10) If the movement involves international transportation, permission for the shipment may also be required from the appropriate authorities of the countries of origin, destination, transit and overflight prior to departure.

(c) The following additional conditions apply to the carriage of Class 3 (flammable) and combustible liquid materials in tanks each having a capacity of more than 420 liters (111 gallons) under the authority of this section:

(1) The tanks and their associated piping and equipment and the installation thereof must have been approved for the material to be transported by the appropriate FAA Regional Office.

(2) In the case of an aircraft being operated by a certificate holder, the operator shall list the aircraft and the approval information in its operating specifications. If the aircraft is being operated by other than a certificate holder, a copy of the FAA Regional Office approval required by this section must be carried on the aircraft.

(3) The crew of the aircraft must be thoroughly briefed on the operation of the particular bulk tank system being used.

(4) During loading and unloading and thereafter until any remaining fumes within the aircraft are dissipated:

(i) Only those electrically operated bulk tank shutoff valves that have been approved under a supplemental type certificate may be electrically operated.

(ii) No engine or electrical equipment, avionic equipment, or auxiliary power units may be operated, except position lights in the steady position and equipment required by approved loading or unloading procedures, as set forth in the operator's operations manual, or for operators that are not certificate holders, as set forth in a written statement.

(iii) No person may fill a container, other than an approved bulk tank, with a Class 3 (flammable and combustible liquid) materials or discharge a Class 3 (flammable and combustible liquid) materials from a container, other than an approved bulk tank, while that container is inside or within 15 m (50 feet) of the aircraft.

(iv) When filling an approved bulk tank by hose from inside the aircraft, the doors and hatches must be fully open to insure proper ventilation.

(v) Static ground wires must be connected between the storage tank or fueler and the aircraft, and between the aircraft and a positive ground device.

[Amdt. 175–1, 41 FR 16106, Apr. 15, 1976]

EDITORIAL NOTE: For FEDERAL REGISTER citations affecting §175.320, see the List of CFR Sections Affected appearing in the Finding Aids section of this volume.

§ 175.630 Special requirements for Division 6.1 (poisonous) materials and materials in Division 6.2 (etiologic or infectious substances).

(a) Hazardous materials bearing the POISON, KEEP AWAY FROM FOOD, ETIOLOGIC AGENT, or INFECTIOUS SUBSTANCE label may not be carried in the same compartment of an aircraft with material which is marked as or known to be foodstuffs, feed, or any other edible material intended for consumption by humans or animals unless either the Division 6.1 (poisonous) materials or materials in Division 6.2 (etiologic or infectious substances) and the foodstuffs, feed, or other edible materials are loaded in separate unit load devices which, when stowed on the aircraft, are not adjacent to each other, or the Division 6.1 (poisonous) materials or materials in Division 6.2 (etiologic or infectious substances) are loaded in one closed unit load device and the foodstuffs, feed or other materials are loaded in another closed unit load device.

(b) No person may operate an aircraft that has been used to transport any package bearing a POISON label unless, upon removal of such package, the area in the aircraft in which it was carried is visually inspected for evidence of leakage, spillage, or other contamination. All contamination discovered must be either isolated or removed from the aircraft. The operation of an aircraft contaminated with such Division 6.1 (poisonous) materials is considered to be the carriage of poisonous materials under paragraph (a) of this section.

[Amdt. 175–1, 41 FR 16106, Apr. 15, 1976, as amended by Amdt. 175–30, 48 FR 53713, Nov. 29, 1983; Amdt. 175–46, 55 FR 39981, Oct. 1, 1990; Amdt. 175–47, 55 FR 52686, Dec. 21, 1990]

EFFECTIVE DATE NOTE: By Amdt. 175–85, 62 FR 1236, Jan. 8, 1997, §175.630 was revised, effective Oct. 1, 1997. At 62 FR 39398, July 22, 1997 the effective date was delayed until Oct. 1, 1998. For the convenience of the user the revised text is set forth as follows:

§ 175.630 Special requirements for Division 6.1 (poisonous) material and Division 6.2 (infectious substance) material.

(a) A hazardous material bearing a POISON, POISON INHALATION HAZARD, KEEP AWAY FROM FOOD, or INFECTIOUS SUBSTANCE label may not be carried in the same compartment of an aircraft with material which is marked as or known to be a foodstuff, feed, or any other edible material intended for consumption by humans or animals unless either the Division 6.1 (poisonous) material or material in Division 6.2 (infectious substance) and the foodstuff, feed, or other edible material are loaded in separate unit load devices which, when stowed on the aircraft, are not adjacent to each other, or the Division 6.1 (poisonous) material or material in Division 6.2 (infectious substance) are loaded in one closed unit load device and the foodstuff, feed or other material is loaded in another closed unit load device.

(b) No person may operate an aircraft that has been used to transport any package bearing a POISON or POISON INHALATION HAZARD label unless, upon removal of such package, the area in the aircraft in which it was carried is visually inspected for evidence of leakage, spillage, or other contamination. All contamination discovered must be either isolated or removed from the aircraft. The operation of an aircraft contaminated with such Division 6.1 (poisonous) materials is considered to be the carriage of poisonous materials under paragraph (a) of this section.

[Amdt. 175–85, 62 FR 1236, Jan. 8, 1997]

§ 175.700 Special limitations and requirements for Class 7 (radioactive) materials.

(a) In addition to other requirements, no person may carry in a passenger-carrying aircraft any package required to be labeled in accordance with §172.403 of this subchapter with a Radioactive Yellow-II or Radioactive Yellow-III label unless:

(1) For a package required to be labeled Radioactive Yellow-II, the transport index does not exceed 1.0;

(2) For a package required to be labeled Radioactive Yellow-III, the transport index does not exceed 3.0;

(3) The package is carried on the floor of the cargo compartment, or freight container; and

(4) The package is carried in the aircraft in accordance with §§175.701 and 175.703(c).

(b) In addition to the reporting requirements of §175.15, the carrier shall also notify the offeror at the earliest practicable moment following any incident in which there has been breakage, spillage, or suspected radioactive contamination involving Class 7 (radioactive) materials shipments. Aircraft in which Class 7 (radioactive) materials have been spilled may not again be placed in service or routinely occupied until the radiation dose rate at every accessible surface is less than 0.005 mSv per hour (0.5 mrem per hour) and there is no significant removable radioactive surface contamination as determined in accordance with §173.443 of this subchapter. When contamination is present or suspected, the package and/or materials it has touched must be segregated as far as practicable from personnel contact until appropriate radiological advice or assistance is obtained. The Regional Office of the U.S. Department of Energy or appropriate State or local radiological authorities can provide advice or assistance, and should be notified in cases of obvious leakage, or if it appears likely that the inside container may have been damaged. For personnel safety, the carrier shall take care to avoid possible inhalation, ingestion, or contact by any person with Class 7 (radioactive) materials that may have leaked or spilled from its package. Any loose Class 7 (radioactive) materials and associated packaging materials must be left in a segregated area pending disposal instructions from responsible radiological authorities.

(c) Except as provided in §§173.4, 173.422 and 173.423 of this subchapter, no person shall carry any Class 7 (radioactive) materials aboard a passenger carrying aircraft unless that material is intended for use in, or incident to research, medical diagnosis or treatment.

(d) Type B(M) packages may not be offered or accepted for transportation, nor transported, on passenger-carrying aircraft.

[Amdt. 175–13, 45 FR 20101, Mar. 27, 1980, as amended by Amdt. 175–19, 46 FR 24185, Apr. 30, 1981; Amdt. 175–26, 48 FR 10245, Mar. 10, 1983; Amdt. 175–31, 49 FR 38134, Sept. 27, 1984; 50 FR 18668, May 2, 1985; Amdt. 175–47, 55 FR 52687, Dec. 21, 1990; Amdt. 175–50, 58 FR 50505, Sept. 27, 1993; Amdt. 175–51, 59 FR 49134, Sept. 26, 1994; Amdt. 175–53, 60 FR 50333, Sept. 28, 1995; 62 FR 51561, Oct. 1, 1997]

§175.701 Separation distance requirements for packages containing Class 7 (radioactive) materials in passenger-carrying aircraft.

(a) *General.* No person may carry in a passenger-carrying aircraft any package required by §172.403 of this subchapter to be labeled Radioactive Yellow-II, or Radioactive Yellow-III unless the package is placed in the aircraft in accordance with the minimum separation distances prescribed in paragraph (b) or (c) of this section.

(b) *Separation distances.* (1) Except as provided in paragraph (c) of this section, the minimum separation distances prescribed in paragraphs (b)(2) and (b)(3) of this section are determined by measuring the shortest distance between the surfaces of the Class 7 (radioactive) materials package and the surfaces bounding the space occupied by passengers or animals. If more than one package of Class 7 (radioactive) materials is placed in a passenger-carrying aircraft, the minimum separation distance for these packages shall be determined in accordance with paragraphs (b)(2) and (b)(3) of this section on the basis of the sum of the transport index numbers of the individual packages or overpacks.

(2) The following table prescribes minimum separation distances that must be maintained in passenger-carrying aircraft between Class 7 (radioactive) materials labeled Radioactive Yellow-II or Radioactive Yellow-III and passengers and crew:

Transport index or sum of transport indexes of all packages in the aircraft or predesignated area	Minimum separation distances	
	Centimeters	Inches
0.1 to 1.0	30	12
1.1 to 2.0	50	20
2.1 to 3.0	70	28
3.1 to 4.0	85	34
4.1 to 5.0	100	40
5.1 to 6.0	115	46
6.1 to 7.0	130	52
7.1 to 8.0	145	57
8.1 to 9.0	155	61
9.1 to 10.0	165	65
10.1 to 11.0	175	69
11.1 to 12.0	185	73
12.1 to 13.0	195	77
13.1 to 14.0	205	81
14.1 to 15.0	215	85
15.1 to 16.0	225	89
16.1 to 17.0	235	93
17.1 to 18.0	245	97
18.1 to 20.0	260	102
20.1 to 25.0	290	114
25.1 to 30.0	320	126
30.1 to 35.0	350	138
35.1 to 40.0	375	148
40.1 to 45.0	400	157
45.1 to 50.0	425	167

(3) Class 7 (radioactive) materials in packages, overpacks or freight containers labeled Radioactive Yellow-II or Radioactive Yellow-III must be separated from live animals by a distance of at least 0.5 meters (20 inches) for journeys not exceeding 24 hours, and by a distance of at least 1.0 meters (39 inches) for journeys longer than 24 hours.

(c) *Predesignated areas.* A package required by §172.403 of this subchapter to be labeled Radioactive Yellow-II or Radioactive Yellow-III may be carried in a passenger-carrying aircraft in accordance with a system of predesignated areas established by the aircraft operator. Each aircraft operator that elects to use a system of predesignated areas shall submit a detailed description of the proposed system to the Associate Administrator for Hazardous Materials Safety for approval prior to implementation of the system. A proposed system of predesignated areas is approved if the Associate Administrator for Hazardous Materials Safety determines that it is designed to assure that:

(1) The packages can be placed in each predesignated area in accordance with the minimum separation distances prescribed in paragraph (b)(2) of this section; and

(2) The predesignated areas are separated from each other by minimum distance equal to at least four times the distances required by paragraphs (b)(1) and (b)(2) of this section for the predesignated area containing packages with the largest sum of transport indexes.

[Amdt. 175–13, 45 FR 20102, Mar. 27, 1980, as amended by Amdt. 175–23, 47 FR 43066, Sept. 30, 1982; Amdt. 175–25, 47 FR 54824, Dec. 6, 1982; Amdt. 175–47, 55 FR 52687, Dec. 21, 1990; 56 FR 66281, Dec. 20, 1991; Amdt. 175–49, 58 FR 50494, Sept. 27, 1993]

§ 175.702 Requirements for carriage of packages containing Class 7 (radioactive) materials in a cargo aircraft only.

(a) As used in this section, the term ''group of packages'' means packages that are separated from each other in an aircraft by a distance of 6 m (20 feet) or less.

(b) No person may carry in a cargo aircraft only any package required by § 172.403 of this subchapter to be labeled Radioactive Yellow-II or Radioactive Yellow-III unless:

(1) The total transport index for all of the packages does not exceed 50.0 and the package is carried in accordance with § 175.701(a); or

(2) The total transport index for all of the packages exceeds 50.0 and:

(i) The separation distance between the surfaces of the Class 7 (radioactive) materials packages, overpacks or freight containers and any space occupied by—

(A) Humans is at least 9 meters (30 feet); and

(B) Live animals is at least 0.5 meters (20 inches) for journeys not exceeding 24 hours and at least 1.0 meters (39 inches) for journeys longer than 24 hours;

(ii) The transport index for any group of packages does not exceed 50.0; and

(iii) Each group of packages is separated from every other group in the aircraft by not less than 6 m (20 feet), measured from the outer surface of each group; and

(iv) The total transport index for all packages containing fissile Class 7 (radioactive) materials does not exceed 50.0.

[Amdt. 175–13, 45 FR 20102, Mar. 27, 1980, as amended by Amdt. 175–29, 48 FR 50461, Nov. 1, 1983; Amdt. 175–47, 55 FR 52687, Dec. 21, 1990; Amdt. 175–49, 58 FR 50494, Sept. 27, 1993]

§175.703 Other special requirements for the acceptance and carriage of packages containing Class 7 (radioactive) materials.

(a) No person may carry in an aircraft any package of Class 7 (radioactive) materials required by §172.403 of this subchapter to be labeled Radioactive Yellow-II or Radioactive Yellow-III closer than the distances shown in the following table to any package marked as containing undeveloped film:

Transport index	Minimum separation distance to nearest undeveloped film for various times of transit									
	Up to 2 hours		2 to 4 hours		4 to 8 hours		8 to 12 hours		Over 12 hours	
	Meters	Feet	Meters	Feet	Meters	Feet	Meters	Feet	Meters	Feet
0.1 to 1.0	0.3	1	0.6	2	0.9	3	1.2	4	1.5	5
1.1 to 5.0	0.9	3	1.2	4	1.8	6	2.4	8	3.3	11
5.1 to 10.0	1.2	4	1.8	6	2.7	9	3.3	11	4.5	15
10.1 to 20.0	1.5	5	2.4	8	3.6	12	4.8	16	6.6	22
20.1 to 30.0	2.1	7	3.0	10	4.5	15	6.0	20	8.7	29
30.1 to 40.0	2.4	8	3.3	11	5.1	17	6.6	22	9.9	33
40.1 to 50.0	2.7	9	3.6	12	5.7	19	7.2	24	10. 8	36

(b) No person may accept for carriage in an aircraft packages of Class 7 (radioactive) materials, other than limited quantities, contained in a rigid or non-rigid overpack, including a fiberboard box or plastic bag, unless they have been prepared for shipment in accordance with §173.448(g) of this subchapter.

(c) No person shall carry in an aircraft a fissile material controlled shipment (as defined in §173.403 of this subchapter), except—

(1) In a cargo aircraft only which has been assigned for the exclusive use of the shipper for the specific shipment of fissile Class 7 (radioactive) material. Instructions for the exclusive use must be developed by the shipper and carrier, and the instructions issued with the shipping papers; or

(2) In an aircraft in which there are no other packages required to bear a radioactive label as prescribed in §172.403 of this subchapter. Specific arrangements must be made between the shipper and carrier, with instructions to that effect issued with the shipping papers.

(d) No person shall offer or accept for transportation, or transport, by air—

(1) Vented Type B(M) packages, packages which require external cooling by an ancillary cooling system or packages subject to operational controls during transport; or

(2) Liquid pyrophoric Class 7 (radioactive) materials.

(e) Packages with radiation levels at the package surface or a transport index in excess of the limits specified in §173.441(a) of this subchapter may not be transported by aircraft except under special arrangements approved by RSPA.

[Amdt. 175–13, 45 FR 20102, Mar. 27, 1980, as amended by Amdt. 175–26, 48 FR 10245, Mar. 10, 1983; Amdt. 175–26, 48 FR 31220, July 7, 1983; Amdt. 175–29, 48 FR 50461, Nov. 1, 1983; Amdt. 175–47, 55 FR 52687, Dec. 21, 1990; Amdt. 175–53, 60 FR 50333, Sept. 28, 1995]

§175.704 Plutonium shipments.

Shipments of plutonium by air which are subject to 10 CFR 71.88(a)(4) must comply with the following:

(a) A plutonium package weighing less than 40 kg (88 lbs) and having its height and diameter both less than 50 cm (19.7 in), must be stowed aboard the aircraft on the main deck or the lower cargo compartment in the aft-most location that is possible for cargo of its size and weight. No other type of cargo may be stowed aft of a plutonium package.

(b) A plutonium package must be secured and restrained to prevent shifting under normal transport. A plutonium package weighing 40 kg (88 lbs) or more must be securely cradled and tied down to the main deck of the aircraft such that the tied down system is capable of providing package restraint against the following inertial forces acting separately relative to the deck of the aircraft: Upward, 2g; Forward, 9g; Sideward, 1.5g; Downward, 4.5g.

(c) A plutonium package weighing less than 40 kg (88 lbs), and having its height and diameter both less than 50 cm (19.7 in), may not be transported aboard an aircraft carrying other cargo required to bear an ''Explosive A'' or an ''Explosive 1.1'' label. Any other plutonium package may not be transported aboard an aircraft carrying other cargo bearing any of the following hazardous material labels: Explosive A; Explosive B; Explosive C; Explosive 1.1, 1.2, 1.3, 1.4, 1.5 or 1.6; Spontaneously Combustible; Dangerous When Wet; Organic Peroxide; Non-Flammable Gas; Flammable Liquid; Flammable Solid; Flammable Gas; Oxidizer; or Corrosive.

[Amdt. 175–53, 60 FR 50333, Sept. 28, 1995]

§ 175.705 Inspection of aircraft for contamination by Class 7 (radioactive) materials.

(a) Aircraft used routinely for the carriage of Class 7 (radioactive) materials shall be periodically checked for radioactive contamination. The frequency of checks shall be related to the likelihood of contamination and the extent to which Class 7 (radioactive) materials are carried.

(b) An aircraft must be taken out of service if the level of contamination exceeds that provided in § 175.700(b).

[Amdt. 175–25, 47 FR 54824, Dec. 6, 1982, as amended by Amdt. 175–47, 55 FR 52687, Dec. 21, 1990]

PART 176—CARRIAGE BY VESSEL

Subpart A—General

Sec.
176.1 Purpose and scope.
176.2 Definitions.
176.3 Unacceptable hazardous materials shipments.
176.4 Port security and safety regulations.
176.5 Application to vessels.
176.9 ''Order-Notify'' or ''C.O.D.'' shipments.
176.11 Exceptions.
176.13 Responsibility for compliance and training.
176.15 Enforcement.
176.18 Assignment and certification.

Subpart B—General Operating Requirements

176.24 Shipping papers.
176.27 Certificate.
176.30 Dangerous cargo manifest.
176.31 Exemptions.
176.36 Preservation of records.
176.39 Inspection of cargo.
176.45 Emergency situations.
176.48 Situation requiring report.
176.50 Acceptance of damaged or leaking packages.
176.52 Rejections of shipments in violation.
176.54 Repairs involving welding, burning, and power-actuated tools and appliances.

Subpart C—General Handling and Stowage

176.57 Supervision of handling and stowage.
176.58 Preparation of the vessel.
176.60 ''No Smoking'' signs.
176.63 Stowage locations.
176.65 Alternative stowage procedures.
176.69 General stowage requirements for hazardous materials.
176.70 Stowage requirements for marine pollutants.
176.72 Handling of break-bulk hazardous materials.
176.74 On deck stowage of break-bulk hazardous materials.
176.76 Transport vehicles, freight containers, and portable tanks containing hazardous materials.
176.77 Stowage of barges containing hazardous materials on board barge-carrying vessels.
176.78 Use of power-operated industrial trucks on board vessels.

Subpart D—General Segregation Requirements

176.80 Application.
176.83 Segregation.
176.84 Other requirements for stowage and segregation for cargo vessels and passenger vessels.

Subpart E—Special Requirements for Transport Vehicles Loaded With Hazardous Materials and Transported on Board Ferry Vessels

176.88 Application.
176.89 Control of transport vehicles.

176.90 Private automobiles.
176.91 Motorboats.
176.92 Cylinders laden in vehicles.
176.93 Vehicles having refrigerating or heating equipment.

Subpart F—Special Requirements for Barges

176.95 Application.
176.96 Materials of construction.
176.97 Prohibition of dump scows.
176.98 Stowage of hazardous materials on board barges.
176.99 Permit requirements for certain hazardous materials.

Subpart G—Detailed Requirements for Class 1 (Explosive) Materials

176.100 Permit for Divisions 1.1 and 1.2 (Classes A and B explosive) materials.
176.102 Supervisory detail.
176.104 Loading and unloading Class 1 (explosive) materials.
176.108 Supervision of Class 1 (explosive) materials during loading, unloading, handling and stowage.

STOWAGE

176.112 Application of stowage provisions.
176.116 General stowage conditions for Class 1 (explosive) materials.
176.118 Electrical requirement.
176.120 Lightning protection.
176.122 Stowage arrangements under deck.
176.124 Ordinary stowage.
176.128 Magazine stowage, general.
176.130 Magazine stowage Type A.
176.132 Magazine stowage Type B.
176.133 Magazine stowage Type C.
176.134 Vehicles.
176.136 Special stowage.
176.137 Portable magazine.
176.138 Deck stowage.

SEGREGATION

176.140 Segregation from other classes of hazardous materials.
176.142 Hazardous materials of extreme flammability.
176.144 Segregation of Class 1 (explosive) materials.
176.145 Segregation in single hold vessels.
176.146 Segregation from non-hazardous materials.

PRECAUTIONS DURING LOADING AND UNLOADING

176.148 Artificial lighting.
176.150 Radio and radar.
176.154 Fueling (bunkering).
176.156 Defective packages.
176.160 Protection against weather.
176.162 Security.
176.164 Fire precautions and firefighting.

PASSENGER VESSELS

176.166 Transport of Class 1 (explosive) materials on passenger vessels.

TRANSPORT UNITS AND SHIPBORNE BARGES

176.168 Transport of Class 1 (explosive) materials in vehicle spaces.
176.170 Transport of Class 1 (explosive) materials in freight containers.
176.172 Structural serviceability of freight containers and vehicles carrying Class 1 (explosive) materials on ships.
176.174 Transport of Class 1 (explosive) materials in shipborne barges.

HANDLING CLASS 1 (EXPLOSIVE) MATERIALS IN PORT

176.176 Signals.
176.178 Mooring lines.
176.180 Watchkeeping.
176.182 Conditions for handling on board ship.
176.184 Class 1 (explosive) materials of Compatibility Group L.
176.190 Departure of vessel.
176.192 Cargo handling equipment for freight containers carrying Class 1 (explosive) materials.

MAGAZINE VESSELS

176.194 Stowage of Class 1 (explosive) materials on magazine vessels.

Subpart H—Detailed Requirements for Class 2 (Compressed Gas) Materials

176.200 General stowage requirements.
176.205 Under deck stowage requirements.
176.210 On deck stowage requirements.
176.220 Smoking or open flame and posting of warning signs.
176.225 Stowage of chlorine.
176.230 Stowage of Division 2.1 (flammable gas) materials.

Subpart I—Detailed Requirements for Class 3 (Flammable) and Combustible Liquid Materials

176.305 General stowage requirements.
176.315 Fire protection requirements.
176.320 Use of hand flashlights.
176.325 Smoking or open flame and posting of warning signs.
176.340 Combustible liquids in portable tanks.

Subpart J—Detailed Requirements for Class 4 (Flammable Solids), Class 5 (Oxidizers and Organic Peroxides), and Division 1.5 (Blasting Agents) Materials

176.400 Stowage of Division 1.5 (blasting agents), Class 4 (flammable solids) and Class 5 (oxidizers and organic peroxides) materials.

176.405 Stowage of charcoal.
176.410 Division 1.5 (blasting agents) materials, ammonium nitrate and ammonium nitrate mixtures.
176.415 Permit requirements for Division 1.5 (blasting agents), ammonium nitrates, and certain ammonium nitrate fertilizers.

Subpart K—[Reserved]

Subpart L—Detailed Requirements for Division 2.3 (Poisonous Gas) and Division 6.1 (Poisonous) Materials

176.600 General stowage requirement.
176.605 Care following leakage or sifting of Division 2.3 (poisonous gas) and Division 6.1 (poisonous) materials.

Subpart M—Detailed Requirements for Radioactive Materials

176.700 General stowage requirements.
176.704 Requirements relating to transport indexes.
176.708 Segregation distance table.
176.710 Care following leakage or sifting of radioactive materials.
176.715 Contamination control.

Subpart N—Detailed Requirements for Class 8 (Corrosive Materials) Materials

176.800 General stowage requirements.
176.805 On deck stowage.

Subpart O—Detailed Requirements for Cotton and Vegetable Fibers, Motor Vehicles, and Asbestos

176.900 Packaging and stowage of cotton and vegetable fibers; general.
176.901 Stowage of cotton or vegetable fibers with rosin or pitch.
176.903 Stowage of cotton or vegetable fibers with coal.
176.905 Motor vehicles or mechanical equipment powered by internal combustion engines.

AUTHORITY: 49 U.S.C. 5101–5127; 49 CFR 1.53.

Subpart A—General

§ 176.1 Purpose and scope.

This part prescribes requirements in addition to those contained in parts 171, 172, and 173 of this subchapter to be observed with respect to the transportation of hazardous materials by vessel.

§ 176.2 Definitions.

As used in this part—

Cantline means the v-shaped groove between two abutting, parallel horizontal cylinders.

Cargo net means a net made of fiber or wire used to provide convenience in handling loose or packaged cargo to and from a vessel.

Clear of living quarters means that the hazardous material must be located so that in the event of release of the material, leakage or vapors will not penetrate accommodations, machinery spaces or other work areas by means of entrances or other openings in bulkheads or ventilation ducts.

Closed freight container means a freight container which totally encloses its contents by permanent structures. A freight container formed partly by a tarpaulin, plastic sheet, or similar material is not a closed freight container.

Commandant (G–MTH) means the Chief, Marine Technical and Hazardous Materials Division, Office of Marine Safety, Security and Environmental Protection, United States Coast Guard, Washington, DC 20593–0001.

Compartment means any space on a vessel that is enclosed by the vessel's decks and its sides or permanent steel bulkheads.

CSC safety approval plate means the safety approval plate specified in Annex I of the International Convention for Safe Containers (1972) and conforming to the specifications in 49 CFR 451.23 and 451.25. The plate is evidence that a freight container was designed, constructed, and tested under international rules incorporated into U.S. regulations in 49 CFR parts 450 through 453. The plate is found in the door area of the container.

Deck structure means a structure of substantial weight and size located on the weather deck of a vessel and integral with the deck. This term includes superstructures, deck houses, mast houses, and bridge structures.

Draft means a load or combination of loads capable of being hoisted into or out of a vessel in a single lift.

Dunnage means lumber of not less than 25 mm (0.98 inch) commercial thickness or equivalent material laid over or against structures such as tank tops, decks, bulkheads, frames, plating,

or ladders, or used for filling voids or fitting around cargo, to prevent damage during transportation.

Explosives anchorage means an anchorage so designated under 33 CFR part 110, subpart B.

Explosive article means an article or device which contains one or more explosive substances. Individual explosive articles are identified in the schedules for Class I (explosive) articles found in the IMDG Code.

Explosives handling facility means—

(1) A ''designated waterfront facility'' designated under 33 CFR part 126 when loading, handling, and unloading Class 1 (explosives) materials; or

(2) A facility for loading, unloading, and handling military Class 1 (explosives) materials which is operated or controlled by an agency of the Department of Defense.

Explosive substance means a solid or liquid material, or a mixture of materials, which is in itself capable by chemical reaction of producing gas at such a temperature and pressure and at such a speed as to cause damage to its surroundings. Individual explosive substances are identified in the schedules for Class 1 (explosive) substances in the IMDG Code.

Handling means the operation of loading and unloading a vessel; transfer to, from, or within a vessel, and any ancillary operations.

Hold means a compartment below deck that is used exclusively for the carriage of cargo.

In containers or the like means in any clean, substantial, weatherproof box structure which can be secured to the vessel's structure, including a portable magazine or a closed transport unit. Whenever this stowage is specified, stowage in deckhouses, mast lockers and oversized weatherproof packages (overpacks) is also acceptable.

Incompatible materials means two materials whose stowage together may result in undue hazards in the case of leakage, spillage, or other accident.

Landing mat means a shock absorbing pad used in loading Class 1 (explosive) materials on vessels.

Machinery Spaces of Category A are those spaces, and trunks to such spaces, which contain:

(1) Internal combustion machinery used for main propulsion:

(2) Internal combustion machinery used for purposes other than main propulsion where such machinery has in the aggregate a total power output of not less than 375 kw; or

(3) any oil-fired boiler or fuel unit.

Magazine means an enclosure designed to protect certain goods of Class 1 (explosive) materials from damage by other cargo and adverse weather conditions during loading, unloading, and when in transit; and to prevent unauthorized access. A magazine may be a fixed structure in the vessel, a closed freight container, a closed transport vehicle, or a portable magazine.

Master of the Vessel, as used in this part, includes the person in charge of an unmanned vessel or barge.

Open freight container means a freight container that does not totally enclose its contents by permanent structures.

Overstowed means a package or container is stowed directly on top of another. However, with regard to Class 1 (explosive) stowage, such goods may themselves be stacked to a safe level but other goods should not be stowed directly on top of them.

Pallet means a portable platform for stowing, handling, and moving cargo.

Palletized unit means packages or unpackaged objects stacked on a pallet, banded and secured to the pallet by metal, fabric, or plastic straps for the purpose of handling as a single unit.

Pie plate means a round, oval, or hexagonal pallet without sideboards, used in conjunction with a cargo net to handle loose cargo on board a vessel.

Portable magazine means a strong, closed, prefabricated, steel or wooden, closed box or container, other than a freight container, designed and used to handle Class 1 (explosive) materials either by hand or mechanical means.

Readily combustible material means a material which may or may not be classed as a hazardous material but which is easily ignited and supports combustion. Examples of readily combustible materials include wood, paper, straw, vegetable fibers, products made from such materials, coal, lubricants, and oils. This definition does not apply to packaging material or dunnage.

Responsible person means a person empowered by the master of the vessel to make all decisions relating to his or her specific task, and having the necessary knowledge and experience for that purpose.

Safe working load means the maximum gross weight that cargo handling equipment is approved to lift.

Skilled person means a person having the knowledge and experience to perform a certain duty.

Skipboard means a square or rectangular pallet without sideboards, usually used in conjunction with a cargo net to handle loose cargo on board a vessel.

Splice as used in § 176.172 of this part, means any repair of a freight container main structural member which replaces material, other than complete replacement of the member.

Transport unit means a transport vehicle or a freight container. A *closed transport unit* means a transport unit in which the contents are totally enclosed by permanent structures. An *open transport unit* means a transport unit which is not a closed transport unit. Transport units with fabric sides or tops are not closed transport units for the purposes of this part.

Tray means a type of pallet constructed to specific dimensions for handling a particular load.

[Amdt. 176–30, 55 FR 52687, Dec. 21, 1990]

§ 176.3 Unacceptable hazardous materials shipments.

(a) A carrier may not transport by vessel any shipment of a hazardous material that is not prepared for transportation in accordance with parts 172 and 173 of this subchapter.

(b) A carrier may not transport by vessel any explosive or explosive composition described in § 173.54 of this subchapter.

[Amdt. 176–1, 41 FR 16110, Apr. 15, 1976, as amended by Amdt. 176–30, 55 FR 52688, Dec. 21, 1990]

§ 176.4 Port security and safety regulations.

(a) Each carrier, master, agent, and charterer of a vessel and all other persons engaged in handling hazardous materials on board vessels shall comply with the applicable provisions of 33 CFR parts 6, 109, 110, 125, 126, and 160.

(b) Division 1.1 and 1.2 (Class A and B explosive) materials may only be loaded on and unloaded from a vessel at—

(1) A facility of particular hazard as defined in 33 CFR 126.05(b);

(2) An explosives anchorage listed in 33 CFR part 110; or

(3) A facility operated or controlled by the Department of Defense.

(c) With the concurrence of the COTP, Division 1.1 and 1.2 (Class A and B explosive) materials may be loaded on or unloaded from a vessel in any location acceptable to the COTP.

[Amdt. 176–30, 55 FR 52688, Dec. 21, 1990]

§ 176.5 Application to vessels.

(a) Except as provided in paragraph (b) of this section, this subchapter applies to each domestic or foreign vessel when in the navigable waters of the United States, regardless of its character, tonnage, size, or service, and whether self-propelled or not, whether arriving or departing, underway, moored, anchored, aground, or while in dry dock.

(b) This subchapter does not apply to:

(1) A public vessel not engaged in commercial service;

(2) A vessel constructed or converted for the principal purpose of carrying flammable or combustible liquid cargo in bulk in its own tanks, when only carrying these liquid cargoes;

(3) A vessel of 15 gross tons or smaller when not engaged in carrying passengers for hire;

(4) A vessel used exclusively for pleasure;

(5) A vessel of 500 gross tons or smaller when engaged in fisheries;

(6) A tug or towing vessel, except when towing another vessel having Class 1 (explosive) materials, Class 3 (flammable liquids), or Division 2.1 (flammable gas) materials, in which case the owner/operator of the tug or towing vessel shall make such provisions to guard against and extinguish fire as the Coast Guard may prescribe;

(7) A cable vessel, dredge, elevator vessel, fireboat, icebreaker, pile driver, pilot boat, welding vessel, salvage vessel, or wrecking vessel; or

(8) A foreign vessel transiting the territorial sea of the United States

without entering the internal waters of the United States, if all hazardous materials being carried on board are being carried in accordance with the requirements of the IMDG Code.

(c) [Reserved]

(d) Except for transportation in bulk packagings (as defined in §171.8 of this subchapter), the bulk carriage of hazardous materials by water is governed by 46 CFR chapter I, subchapters D, I, N and O.

[Amdt. 176–1, 41 FR 16110, Apr. 15, 1976, as amended by Amdt. 176–1A, 41 FR 40687, Sept. 20, 1976; Amdt. 176–14, 47 FR 44471, Oct. 7, 1982; Amdt. 176–24, 51 FR 5974, Feb. 18, 1986; Amdt. 176–30, 55 FR 52688, Dec. 21, 1990; 56 FR 66281, Dec. 20, 1991; Amdt. 176–34, 58 FR 51533, Oct. 1, 1993]

§176.9 "Order-Notify" or "C.O.D." shipments.

A carrier may not transport Division 1.1 or 1.2 (Class A explosive) materials, detonators, or boosters with detonators which are:

(a) Consigned to ''order-notify'' or ''C.O.D.'', except on a through bill of lading to a place outside the United States; or

(b) Consigned by the shipper to himself unless he has a resident representative to receive the shipment at the port of discharge.

[Amdt. 176–30, 55 FR 52688, Dec. 21, 1990]

§176.11 Exceptions.

(a) A hazardous material may be offered and accepted for transport by vessel when in conformance with the IMDG Code, subject to the conditions and limitations set forth in §171.12 of this subchapter. The requirements of §§176.83, 176.84, and 176.112 through 176.174 are not applicable to shipments of Class 1 (explosive) materials made in accordance with the IMDG Code. A hazardous material which conforms to the provisions of this paragraph (a) is not subject to the requirement specified in §172.201(d) of this subchapter for an emergency response telephone number, when transportation of the hazardous material originates and terminates outside the United States and the hazardous material—

(1) Is not offloaded from the vessel; or

(2) Is offloaded between ocean vessels at a U.S. port facility without being transported by public highway.

(b) Canadian shipments and packages may be transported by vessel if they are transported in accordance with this subchapter. (See §171.12a of this subchapter.)

(c) The requirements of this subchapter governing the transportation of combustible liquids do not apply to the transportation of combustible liquids in non-bulk (see definitions in §171.8 of this subchapter) packages on board vessels.

(d) Transport vehicles, containing hazardous materials loaded in accordance with specific requirements of this subchapter applicable to such vehicles, may be transported on board a ferry vessel or carfloat, subject to the applicable requirements specified in §§176.76, 176.100, and subpart E of this part.

(e) Hazardous materials classed and shipped as ORM–D are not subject to the requirements of this part unless they are offered for transporation as hazardous wastes.

(f) Paragraph (a) of this section does not apply to hazardous materials, including certain hazardous wastes and hazardous substances as defined in §171.8 of this subchapter, which are not subject to the requirements of the IMDG Code.

(g) The requirements of this subchapter do not apply to atmospheric gases used in a refrigeration system.

[Amdt. 176–1, 41 FR 16110, Apr. 15, 1976]

EDITORIAL NOTE: For FEDERAL REGISTER citations affecting §176.11, see the List of CFR Sections Affected appearing in the Finding Aids section of this volume.

§176.13 Responsibility for compliance and training.

(a) Unless this subchapter specifically provides that another person shall perform a particular duty, each carrier shall perform the duties specified and comply with all applicable requirements in this part and shall ensure its hazmat employees receive training in relation thereto.

(b) A carrier may not transport a hazardous material by vessel unless each of its hazmat employees involved

in that transportation is trained as required by subpart H of part 172 of this subchapter.

(c) The record of training required by § 172.704(d) of this subchapter for a crewmember who is a hazmat employee subject to the training requirements of this subchapter must be kept on board the vessel while the crewmember is in service on board the vessel.

[Amdt. 176–31, 57 FR 20954, May 15, 1992, as amended by Amdt. 176–35, 59 FR 49134, Sept. 26, 1994]

§ 176.15 Enforcement.

(a) An enforcement officer of the U.S. Coast Guard may at any time and at any place, within the jurisdiction of the United States, board any vessel for the purpose of enforcement of this subchapter and inspect any shipment of hazardous materials as defined in this subchapter.

(b) [Reserved]

[Amdt. 176–1, 41 FR 16110, Apr. 15, 1976, as amended by Amdt. 176–1A, 41 FR 40687, Sept. 20, 1976; Amdt. 176–24, 51 FR 5974, Feb. 18, 1986]

§ 176.18 Assignment and certification.

(a) The National Cargo Bureau, Inc., is authorized to assist the Coast Guard in administering this subchapter with respect to the following:

(1) Inspection of vessels for suitability for loading hazardous materials;

(2) Examination of stowage of hazardous materials;

(3) Making recommendations for stowage requirements of hazardous materials cargo; and

(4) Issuance of certificates of loading setting forth that the stowage of hazardous materials is in accordance with the requirements of this subchapter.

(b) A certificate of loading issued by the National Cargo Bureau, Inc., may be accepted by the Coast Guard as prima facie evidence that the cargo is stowed in conformity with the requirements of this subchapter.

[Amdt. 176–1, 41 FR 16110, Apr. 15, 1976, as amended by Amdt. 176–24, 51 FR 5974, Feb. 18, 1986]

Subpart B—General Operating Requirements

§ 176.24 Shipping papers.

A carrier may not transport a hazardous material by vessel unless the material is properly described on the shipping paper in the manner prescribed in part 172 of this subchapter.

§ 176.27 Certificate.

(a) A carrier may not transport a hazardous material by vessel unless he has received a certificate prepared in accordance with § 172.204 of this subchapter.

(b) In the case of an import or export shipment of hazardous materials which will not be transported by rail, highway, or air, the shipper may certify on the bill of lading or other shipping paper that the hazardous material is properly classed, described, marked, packaged, and labeled according to part 172 of this subchapter or in accordance with the requirements of the IMDG Code. See § 171.12 of this subchapter.

(c)(1) A person responsible for packing or loading a freight container or transport vehicle containing hazardous materials for transportation by a manned vessel in ocean or coastwise service, must provide the vessel operator, at the time the shipment is offered for transportation by vessel, with a signed container packing certificate stating, at a minimum, that—

(i) The freight container or transport unit is serviceable for the materials loaded therein, contains no incompatible goods, and is properly marked, labeled or placarded, as applicable; and

(ii) When the freight container or transport unit contains packages, those packages have been inspected prior to loading, are properly marked,

labeled or placarded, as applicable; are not damaged; and are properly secured.

(2) The certification may appear on a shipping paper or on a separate document as a statement such as ''It is declared that the packing of the container has been carried out in accordance with the provisions of 49 CFR 176.27(c)''.

[Amdt. 176–1, 41 FR 16110, Apr. 15, 1976, as amended by Amdt. 176–1A, 41 FR 40687, Sept. 20, 1976; Amdt. 176–12, 45 FR 81572, Dec. 11, 1980; Amdt. 176–14, 47 FR 44471, Oct. 7, 1982; Amdt. 176–36, 59 FR 67518, Dec. 29, 1994]

§176.30 Dangerous cargo manifest.

(a) The carrier, its agents, and any person designated for this purpose by the carrier or agents shall prepare a dangerous cargo manifest, list, or stowage plan. This document may not include a material which is not subject to the requirements of 49 CFR or the IMDG Code. This document must be kept in a designated holder on or near the vessel's bridge. It must contain the following information:

(1) Name of vessel and official number. (If the vessel has no official number, the international radio call sign must be substituted.);

(2) Nationality of vessel;

(3) Shipping name and identification number of each hazardous material on board as listed in §172.101 of this subchapter or as listed in the IMDG Code and an emergency response telephone number as prescribed in subpart G of part 172 of this subchapter.

(4) The number and description of packages (barrels, drums, cylinders, boxes, etc.) and gross weight for each type of packaging;

(5) Classification of the hazardous material in accordance with either;

(i) The Hazardous Materials Table, the §172.101 Table; or

(ii) The International Maritime Organization's IMDG Code.

(6) Any additional description required by §172.203 of this subchapter.

(7) Stowage location of the hazardous material on board the vessel.

(8) In the case of a vessel used for the storage of explosives or other hazardous materials, the following additional information is required:

(i) Name and address of vessel's owner;

(ii) Location of vessel's mooring;

(iii) Name of person in charge of vessel;

(iv) Name and address of the owner of the cargo; and

(v) A complete record, by time intervals of one week, of all receipts and disbursements of hazardous materials. The name and address of the consignor must be shown against all receipts and the name and address of the consignee against all deliveries.

(b) The hazardous material information on the dangerous cargo manifest must be the same as the information furnished by the shipper on the shipping order or other shipping paper, except that the IMO ''correct technical name'' and the IMO class may be indicated on the manifest as provided in paragraphs (a)(3) and (a)(5) of this section. The person who supervises the preparation of the manifest, list, or stowage plan shall ensure that the information is correctly transcribed, and shall certify to the truth and accuracy of this information to the best of his knowledge and belief by his signature and notation of the date prepared.

(c) The carrier and its agents shall insure that the master, or a licensed deck officer designated by the master and attached to the vessel, or in the case of a barge, the person in charge of the barge, acknowledges the correctness of the dangerous cargo manifest, list or stowage plan by his signature.

(d) For barges, manned or unmanned, the requirements of this section apply except for the following:

(1) In the case of a manned barge, the person in charge of the barge shall prepare the dangerous cargo manifest.

(2) In the case of an unmanned barge, the person responsible for loading the barge is responsible for the preparation of a dangerous cargo manifest, list, or stowage plan and must designate an individual for that purpose.

(3) For all barges, manned or unmanned, the dangerous cargo manifest must be on board the barge in a readily accessible location and a copy must be furnished to the person in charge of the towing vessel.

(e) Each carrier who transports or stores hazardous materials on a vessel shall retain a copy of the dangerous cargo manifest, list, or stowage plan

for at least one year, and shall make that document available for inspection in accordance with § 176.36(b) of this subchapter.

[Amdt. 176–1, 41 FR 16110, Apr. 15, 1976]

EDITORIAL NOTE: For FEDERAL REGISTER citations affecting § 176.30, see the List of CFR Sections Affected appearing in the Finding Aids section of this volume.

§ 176.31 Exemptions.

If a hazardous material is being transported by vessel under the authority of an exemption and a copy of the exemption is required to be on board the vessel, it must be kept with the dangerous cargo manifest.

§ 176.36 Preservation of records.

(a) When this part requires shipping orders, manifest, cargo lists, stowage plans, reports, or any other papers, documents or similar records to be prepared, the carrier shall preserve them or copies of them in his place of business or office in the United States for a period of one year after their preparation.

(b) Any record required to be preserved must be made available upon request to an authorized representative of the Department of Transportation.

§ 176.39 Inspection of cargo.

(a) *Manned vessels.* The carrier, its agents, and any person designated for this purpose by the carrier or agents shall cause an inspection of each hold or compartment containing hazardous materials to be made after stowage is complete, and at least once every 24 hours thereafter, weather permitting, in order to ensure that the cargo is in a safe condition and that no damage caused by shifting, spontaneous heating, leaking, sifting, wetting, or other cause has been sustained by the vessel or its cargo since loading and stowage. However, freight containers or individual barges need not be opened. A vessel's holds equipped with smoke or fire detecting systems having an automatic monitoring capability need not be inspected except after stowage is complete and after periods of heavy weather. The carrier, its agents, and any person designated for this purpose by the carrier or agents shall cause an entry to be made in the vessel's deck log book for each inspection of the stowage of hazardous materials performed.

(b) *Unmanned and magazine vessels.* An inspection of the cargo must be made after stowage has been completed to ensure that stowage has been accomplished properly and that there are no visible signs of damage to any packages or evidence of heating, leaking, or sifting. This inspection must be made by the individual who is responsible to the carrier and who is in charge of loading and stowing the cargo on the unmanned vessels or the individual in charge in the case of a magazine vessel.

(c) The carrier, its agents, and any person designated for this purpose by the carrier or agents of each ocean-going vessel carrying hazardous material shall, immediately prior to entering a port in the United States, cause an inspection of that cargo to be made.

(d) When inspecting a cargo of hazardous materials capable of evolving flammable vapors, any artificial means of illumination must be of an explosion-proof type.

[Amdt. 176–1, 41 FR 16110, Apr. 15, 1976, as amended by Amdt. 176–8, 44 FR 23228, Apr. 19, 1979; Amdt. 176–9, 44 FR 49458, Aug. 23, 1979]

§ 176.45 Emergency situations.

(a) When an accident occurs on board a vessel involving hazardous materials, and the safety of the vessel, its passengers or crew are endangered, the master shall adopt such procedures as will, in his judgment, provide maximum safety for the vessel, its passengers, and its crew. When the accident results in damaged packages or the emergency use of unauthorized packagings, these packages may not be offered to any forwarding carrier for transportation. The master shall notify the nearest Captain of the Port, U.S. Coast Guard, and request instructions for disposition of the packages.

(b) Hazardous materials may be jettisoned only if the master believes this action necessary to prevent or substantially reduce a hazard to human life or reduce a substantial hazard to property.

[Amdt. 176–1, 41 FR 16110, Apr. 15, 1976, as amended by Amdt. 176–1B, 41 FR 57072, Dec. 30, 1976]

§176.48 Situation requiring report.

(a) When a fire or other hazardous condition exists on a vessel transporting hazardous materials, the master shall notify the nearest Captain of the Port as soon as possible and shall comply with any instructions given by the Captain of the Port.

(b) When an incident occurs during transportation in which a hazardous material is involved, a report may be required (see §§171.15 and 171.16 of this subchapter).

(c) If a package, portable tank, freight container, highway or railroad vehicle containing hazardous materials is jettisoned or lost, the master shall notify the nearest Captain of the Port as soon as possible of the location, quantity, and type of the material.

[Amdt. 176–1, 41 FR 16110, Apr. 15, 1976, as amended by Amdt. 176–1A, 41 FR 40687, Sept. 20, 1976; Amdt. 176–1B, 41 FR 57072, Dec. 30, 1976; Amdt. 176–24, 51 FR 5974, Feb. 18, 1986; Amdt. 176–25, 52 FR 8592, Mar. 19, 1987]

§176.50 Acceptance of damaged or leaking packages.

A carrier may not transport by vessel any package that is so damaged as to permit the escape of its contents, that appears to have leaked, or that gives evidence of failure to properly contain the contents unless it is restored or repaired to the satisfaction of the master of the vessel. A package containing radioactive materials (other than low specific activity materials) may not be repaired or restored.

[Amdt. 176–1, 41 FR 16110, Apr. 15, 1976, as amended by Amdt. 176–1A, 41 FR 40687, Sept. 20, 1976]

§176.52 Rejections of shipments in violation.

(a) A carrier may not knowingly transport by vessel any hazardous material offered under a false or deceptive name, marking, invoice, shipping paper or other declaration, or without the shipper furnishing written information about the true nature of the material at the time of delivery.

(b) If a shipment in violation is found in transit, the master of the vessel shall adopt procedures which in his judgment provide maximum safety to the vessel, its passengers and its crew and which are in compliance with §176.45. If the vessel is in port, the material may not be delivered to any party, and the master shall immediately notify the nearest Captain of the Port and request instructions for disposition of the material.

[Amdt. 176–1, 41 FR 16110, Apr. 15, 1976, as amended by Amdt. 176–1B, 41 FR 57072, Dec. 30, 1976]

§176.54 Repairs involving welding, burning, and power-actuated tools and appliances.

(a) Except as provided in paragraph (b) of this section, repairs or work involving welding or burning, or the use of power-actuated tools or appliances which may produce intense heat may not be undertaken on any vessel having on board explosives or other hazardous materials as cargo.

(b) Paragraph (a) of this section does not apply if:

(1) The repairs or work are approved by the COTP under 33 CFR 126.15(c); or

(2) Emergency repairs to the vessel's main propelling or boiler plant or auxiliaries are necessary for the safety of the vessel. If such repairs are performed, the master of the vessel must immediately notify the nearest COTP.

[Amdt. 176–1, 41 FR 16110, Apr. 15, 1976, as amended by Amdt. 176–30, 55 FR 52689, Dec. 21, 1990]

Subpart C—General Handling and Stowage

§176.57 Supervision of handling and stowage.

(a) Hazardous materials may be handled or stowed on board a vessel only under the direction and observation of a responsible person assigned this duty.

(b) For a vessel engaged in coastwise voyages, or on rivers, bays, sounds or lakes, including the Great Lakes when the voyage is not foreign-going, the responsible person may be an employee of the carrier and assigned this duty by the carrier, or a licensed officer attached to the vessel and assigned by the master of the vessel.

(c) For a domestic vessel engaged in a foreign-going or intercoastal voyage, the responsible person must be an officer possessing an unexpired license issued by the USCG and assigned this duty by the master of the vessel.

(d) For a foreign vessel, the responsible person must be an officer of the vessel assigned this duty by the master of the vessel.

[Amdt. 176–30, 55 FR 52689, Dec. 21, 1990]

§ 176.58 Preparation of the vessel.

(a) Each hold or compartment in which hazardous materials are to be stowed must be free of all debris before the hazardous materials are stowed. Bilges must be examined and all residue of previous cargo removed.

(b) All decks, gangways, hatches, and cargo ports over or through which hazardous materials must be passed or handled in loading or unloading must be free of all loose materials before cargo handling operations begin.

(c) No debris that creates a fire hazard or a hazardous condition for persons engaged in handling hazardous materials may be on the weather deck of a vessel during loading or unloading operations.

(d) Hatch beams and hatch covers may not be stowed in a location that would interfere with cargo handling.

[Amdt. 176–30, 55 FR 52689, Dec. 21, 1990]

§ 176.60 "No Smoking" signs.

When smoking is prohibited during the loading, stowing, storing, transportation, or unloading of hazardous materials by this part, the carrier and the master of the vessel are jointly responsible for posting ''NO SMOKING'' signs in conspicuous locations.

§ 176.63 Stowage locations.

(a) The table in § 172.101 of this subchapter specifies generally the locations authorized for stowage of the various hazardous materials on board vessels. This part prescribes additional requirements with respect to the stowage of specific hazardous materials in addition to those authorized in § 172.101 of this subchapter. This section sets forth the basic physical requirements for the authorized locations.

(b) To qualify as ''on deck'' stowage, the location must be on the weather deck. If it is in a house on the weather deck, it must have a permanent structural opening to the atmosphere, such as a door, hatch companionway or manhole, and must be vented to the atmosphere. It may not have any structural opening to any living quarters, cargo, or other compartment unless the opening has means for being closed off and secured. Any deck house containing living quarters, a steering engine, a refrigerating unit, a refrigerated stowage box, or a heating unit may not be used unless that area is isolated from the cargo stowage area by a permanent, and tight metallic bulkhead. Stowage in a shelter or 'tween deck is not considered to be ''on deck''. A barge which is vented to the atmosphere and is stowed on deck on a barge-carrying ship is considered to be ''on deck''. When an entry in § 172.101 of this subchapter requires ''on-deck'' stowage and is qualified by the requirement ''shade from radiant heat'', the stowage must be protected from the direct rays of the sun by means of structural erections or awnings except that such protection is not required for shipment in portable tanks.

(c) To qualify as ''under deck'' stowage, the location must be in a hold or compartment below the weather deck capable of being ventilated and allotted entirely to the carriage of cargo. It must be bounded by permanent steel decks and bulkheads or the shell of the vessel. The deck openings must have means for effectively closing the hold or compartment against the weather, and in the case of superimposed holds, for effectively closing off each hold. A hold or compartment containing a crew passage formed by battens or by mesh or wire screen bulkhead may not be used for the stowage of any hazardous material unless a watchman is provided for this area.

(d) To qualify as ''under deck away from heat'', the location must be under deck and have built-in means for ventilation. If it is subject to heat from any artificial source, it only qualifies for the stowage of those hazardous materials for which ''under deck'' stowage is authorized.

[Amdt. 176–1, 41 FR 16110, Apr. 15, 1976, as amended by Amdt. 176–1A, 41 FR 40687, Sept. 20, 1976; Amdt. 176–1B, 41 FR 57072, Dec. 30, 1976; Amdt. 176–12, 45 FR 81572, Dec. 11, 1980]

§176.65 Alternative stowage procedures.

When a hazardous material is to be loaded on board a vessel and it is shown to the satisfaction of the Coast Guard Captain of the Port for the place where the vessel is being loaded that it is impracticable to comply with a stowage location requirement specified in the §172.101 Table of this subchapter or a segregation, handling or stowage requirement specified in this part, the Captain of the Port may authorize in writing the use of an alternative stowage location or method of segregation, handling or stowage subject to such conditions as he finds will insure a level of safety at least equal to that afforded by the regulatory requirement concerned.

[Amdt. 176–30, 55 FR 52689, Dec. 21, 1990]

§176.69 General stowage requirements for hazardous materials.

(a) Hazardous materials (except as provided in paragraph (c) of this section and Class 9 (miscellaneous hazardous) materials) must be stowed in a manner that will facilitate inspection during the voyage, their removal from a potentially dangerous situation, and the removal of packages in case of fire.

(b) Each package marked in accordance with §172.312(a)(2) of this subchapter must be stowed as to remain in the position indicated during transportation.

(c) If a vessel designed for and carrying hazardous materials in freight containers or a vessel designed for and carrying hazardous materials in barges is equipped with a fixed fire extinguishing and fire detection system, the freight containers or barges need not be stowed in the manner required by paragraph (a) of this section. When freight containers or barges containing hazardous materials are stowed on deck, they need not be stowed in the manner required by paragraph (a) of this section if fire fighting equipment capable of reaching and piercing the freight container or barge is on board the vessel.

(d) Packages of hazardous materials must be secured and dunnaged to prevent movement in any direction. Vertical restraints are not required if the shape of the package and the stuffing pattern preclude shifting of the load.

(e) Packages of hazardous materials must be braced and dunnaged so that they are not likely to be pierced by the dunnage or crushed by a superimposed load.

[Amdt. 176–1, 41 FR 16110, Apr. 15, 1976, as amended by Amdt. 176–1A, 41 FR 40687, Sept. 20, 1976; Amdt. 176–12, 45 FR 81573, Dec. 11, 1980; Amdt. 176–30, 55 FR 52689, Dec. 21, 1990; 56 FR 66282, Dec. 20, 1991]

§176.70 Stowage requirements for marine pollutants.

(a) Marine pollutants must be properly stowed and secured to minimize the hazards to the marine environment without impairing the safety of the ship and the persons on board.

(b) Where stowage is permitted ''on deck or under deck'', under deck stowage is preferred except when a weather deck provides equivalent protection.

(c) Where stowage ''on deck only'' is required, preference should be given to stowage on well-protected decks or to stowage inboard in sheltered areas of exposed decks.

[Amdt. 176–31, 57 FR 52940, Nov. 5, 1992]

§176.72 Handling of break-bulk hazardous materials.

(a) A metal bale hook may not be used for handling any package of hazardous materials.

(b) The use of equipment designed to lift or move cargo by means of pressure exerted on the packages may not be used for handling any package of hazardous materials if the device can damage the package or the package is not designed to be moved in that manner.

(c) Pallets, slings, cargo nets and other related equipment used in loading packages of hazardous materials must give adequate support to the packages. The packages must be contained so that they are not able to fall during loading.

§176.74 On deck stowage of break-bulk hazardous materials.

(a) Packages containing hazardous materials must be secured by enclosing in boxes, cribs or cradles and proper lashing by use of wire rope, strapping or other means, including shoring and bracing, or both. Lashing of deck cargo

is permitted if eye pads are used to attach the lashings. Lashings may not be secured to guard rails. Bulky articles must be shored.

(b) A packaging susceptible to weather or water damage must be protected so that it will not be exposed to the weather or to sea water.

(c) Not more than fifty percent of the total open deck area should be used for stowage of hazardous materials (except Class 9 (miscellaneous hazardous) materials material).

(d) Fireplugs, hoses, sounding pipes, and access to these must be free and clear of all cargo.

(e) Crew and passenger spaces and areas set aside for the crew's use may not be used to stow any hazardous material.

(f) A hazardous material may not be stowed within a horizontal distance of 25 feet of an operating or embarkation point of a lifeboat.

(g) Hazardous materials must be stowed to permit safe access to the crew's quarters and to all parts of the deck required in navigation and necessary working of the vessel.

(h) When runways for use of the crew are built over stowed hazardous materials, they must be constructed and fitted with rails and lifelines so as to afford complete protection to the crew when in use.

[Amdt. 176–1, 41 FR 16110, Apr. 15, 1976, as amended by Amdt. 176–1B, 41 FR 57072, Dec. 30, 1976; Amdt. 176–30, 55 FR 52689, Dec. 21, 1990; 56 FR 66282, Dec. 20, 1991]

§ 176.76 Transport vehicles, freight containers, and portable tanks containing hazardous materials.

(a) Except as provided in paragraphs (b) through (f) of this section, hazardous materials authorized to be transported by vessel may be carried on board a vessel in a transport vehicle or freight container, subject to the following conditions (see additional requirements concerning the transport of Class 1 (explosive) materials in §§ 176.168 through 176.172 of this subchapter):

(1) The material must be in proper condition for transportation according to the requirements of this subchapter;

(2) All packages in the transport vehicle or freight container must be secured to prevent movement in any direction. Vertical restraint is not required if the shape of the packages, loading pattern, and horizontal restraint preclude vertical movement of the load within the freight container or transport vehicle;

(3) Bulkheads made of dunnage which extend to the level of the cargo must be provided unless the packages are stowed flush with the sides or ends;

(4) Dunnage must be secured to the floor when the cargo consists of dense materials or heavy packages;

(5) Each package marked in accordance with § 172.312(a)(2) of this subchapter must be stowed as marked;

(6) Any slack spaces between packages must be filled with dunnage;

(7) The weight in a container must be distributed throughout as evenly as possible and the maximum permissible weight must not be exceeded;

(8) Adjacent levels of baggaged and baled cargo must be stowed in alternate directions so that each tier binds the tier above and below it;

(9) [Reserved]

(10) The lading must be contained entirely within the freight container or vehicle body without overhang or projection except that oversized machinery such as tractors or vehicles with batteries attached may overhang or project outside the intermodal container provided all of that portion of the lading that consists of hazardous materials is contained entirely within the freight container. No open-bed container or vehicle is permitted to carry hazardous materials unless it is equipped with a means of properly securing the lading.

(b) A transport vehicle containing hazardous materials may be carried only on board a trailership, trainship, ferry vessel or car float.

(c) [Reserved]

(d) A transport vehicle or freight container equipped with heating or refrigeration equipment may be operated on board a vessel. However, the equipment may not be operated in any hold or compartment in which any flammable liquid or gas is stowed. Any heating or air conditioning equipment having a fuel tank containing a flammable liquid or gas may be stowed only ''on deck''. Equipment electrically powered

and designed to operate within an environment containing flammable vapors may be operated below deck in a hold or compartment containing a flammable liquid or gas. (See §176.79.)

(e) A transport vehicle, loaded with any hazardous material which is required to be stowed ''on deck'' by §172.101 of this subchapter, may be stowed one deck below the weather deck when transported on a trainship or trailership which is unable to provide ''on deck'' stowage because of the vessel's design. Otherwise, the transport vehicle or container must be transported ''on deck.''

(f) A hazardous material may be carried on board a vessel in a portable tank subject to the following conditions:

(1) Small passenger vessels of 100 gross tons, or less, may carry a hazardous material in a portable tank only when 16 or less passengers are on board and only when specifically authorized by the Officer-in-Charge, Marine Inspection, by endorsement of the vessel's Certificate of Inspection.

(2) Portable tanks containing Flammable liquids or gases, Combustible liquids with flashpoints below 141° F. that are insoluble in water, or organic peroxides, spontaneously combustible materials, or water reactive materials must be stowed on deck irrespective of the stowage authorized in §172.101 of this subchapter. Portable tanks containing hazardous materials not restricted to on deck stowage by the previous sentence must be stowed in accordance with the requirements specified in §172.101 of this subchapter.

(3) Aluminum, magnesium, and their alloys are specifically prohibited as materials of construction of portable tanks.

(g) *Cryogenic liquids.* For shipment of cryogenic liquids on board a vessel the packaging must be designed and filled so that:

(1) Any cryogenic liquid being transported in a cargo tank, regardless of the pressure in the package, must be contained in a steel jacketed Specification MC–338 (§178.338 of this subchapter) insulated cargo tank.

(2) Any valve or fitting with moving or abrading parts that may come in contact with any cryogenic liquid may not be made of aluminum.

(3) For a flammable cryogenic liquid being transported in a cargo tank, the elapsed time between the loading of the cargo tank and the subsequent unloading of the cargo tank at its final destination may not exceed the marked rated holding time (MRHT) of the cargo tank for the cryogenic liquid being transported, which must be displayed on or adjacent to the specification plate.

(4) Portable tanks, cargo tanks, and tank cars containing cryogenic liquids must be stowed ''on deck'' regardless of the stowage authorized in §172.101 of this subchapter. Cargo tanks or tank cars containing cryogenic liquids may be stowed one deck below the weather deck when transported on a trailership or trainship that is unable to provide ''on deck'' stowage because of the vessel's design. Tank cars must be Class DOT–113 or AAR–204W tank cars.

(h) A fumigated transport unit may only be transported on board a vessel subject to the following conditions and limitations:

(1) The fumigated transport unit may be placed on board a vessel only if at least 24 hours have elapsed since the unit was last fumigated;

(2) The fumigated transport unit is accompanied by a document showing the date of fumigation and the type and amount of fumigant used;

(3) Prior to loading, the master is informed of the intended placement of the fumigated transport unit on board the vessel and the information provided on the accompanying document;

(4) Equipment that is capable of detecting the fumigant and instructions for the equipment's use is provided on the vessel;

(5) The fumigated transport unit must be stowed at least five meters from any opening to accommodation spaces;

(6) Fumigated transport units may only be transported on deck on vessels carrying more than 25 passengers; and

(7) Fumigants may not be added to transport units while on board a vessel.

[Amdt. 176–1, 41 FR 16110, Apr. 15, 1976]

EDITORIAL NOTE: For FEDERAL REGISTER citations affecting §176.76, see the List of

CFR Sections Affected appearing in the Finding Aids section of this volume.

§ 176.77 Stowage of barges containing hazardous materials on board barge-carrying vessels.

(a) A barge which contains hazardous materials may be transported on board a barge-carrying vessel if it is stowed in accordance with the requirements of this section.

(b) A barge which contains hazardous materials for which only ''on deck'' stowage is authorized must be stowed above the weather deck and be vented to the atmosphere.

(c) A barge which contains hazardous materials for which both ''on deck'' and ''below deck'' storage is authorized may be stowed above or below the weather deck.

§ 176.78 Use of power-operated industrial trucks on board vessels.

(a) *Power Operated trucks.* A power-operated truck (including a power-operated tractor, forklift, or other specialized truck used for cargo handling) may not be used on board a vessel in a space containing a hazardous material unless the truck conforms to the requirements of this section. The COTP may suspend or prohibit the use of cargo handling vehicles or equipment when that use constitutes a safety hazard.

(b) Each truck must have a specific designation of Underwriter's Laboratories or Factory Mutual Laboratories. Any repair or alteration to a truck must be equivalent to that required on the original designation.

(c) *Description of designations.* The recognized testing laboratory type designations are as follows:

(1) An ''E'' designated unit is an electrically-powered unit that has minimum acceptable safeguards against inherent fire hazards.

(2) An ''EE'' designated unit is an electrically-powered unit that has, in addition to all the requirements for the ''E'' unit, the electric motor and all other electrical equipment completely enclosed.

(3) An ''EX'' designated unit is an electrically-powered unit that differs from the ''E'' and ''EE'' unit in that the electrical fittings and equipment are so designed, constructed, and assembled that the unit may be used in certain atmospheres containing flammable vapors or dusts.

(4) A ''G'' designated unit is a gasoline-powered unit having minimum acceptable safeguards against inherent fire hazards.

(5) A ''GS'' designated unit is a gasoline-powered unit that is provided with additional safeguards to the exhaust, fuel, and electrical systems.

(6) An ''LP'' designated unit is similar to a ''G'' unit except that it is powered by liquefied petroleum gas instead of gasoline.

(7) An ''LPS'' designated unit is a unit similar to a ''GS'' unit except that liquefied petroleum gas is used for fuel instead of gasoline.

(8) A ''D'' designated unit is a unit similar to a ''G'' unit except that it is powered by a diesel engine instead of a gasoline engine.

(9) A ''DS'' designated unit is a unit powered by a diesel engine provided with additional safeguards to the exhaust, fuel, and electrical systems.

(d) *Class 1 (explosive) materials.* No power-operated truck may be used to handle Class 1 (explosive) materials or other cargo in an area near Class 1 (explosive) materials on board a vessel except:

(1) A power-operated truck designated EE or EX.

(2) A power-operated truck designated LPS, GS, D, or DS may be used under conditions acceptable to the COTP.

(e) *Other hazardous materials.* (1) Only an ''EX'', ''EE'', ''GS'', ''LPA'', or ''DS'' truck may be used in a hold or compartment containing Division 2.1 (flammable gas) materials, Class 3 (flammable liquids), Class 4 (flammable solids) materials, or Class 5 (oxidizers or organic peroxides) materials, cottons or other vegetable fibers, or bulk sulfur.

(2) Only a designated truck may be used to handle any other hazardous material not covered in paragraph (d) or (e)(1) of this section.

(f) *Minimum safety features.* In addition to the construction and design safety features required, each truck must have at least the following minimum safety features:

(1) The truck must be equipped with a warning horn, whistle, gong, or other device that may be heard clearly above normal shipboard noises.

(2) When the truck operation may expose the operator to danger from a falling object, the truck must be equipped with a driver's overhead guard. When the overall height of the truck with forks in the lowered position is limited by head room the overhead guard may be omitted. This overhead guard is only intended to offer protection from impact of small packages, boxes, bagged material, or similar hazards.

(3) A forklift truck used to handle small objects or unstable loads must be equipped with a load backrest extension having height, width, and strength sufficient to prevent any load, or part of it, from falling toward the mast when the mast is in a position of maximum backward tilt. The load backrest extension must be constructed in a manner that does not interfere with good visibility.

(4) The forks on a fork lift truck must be secured to the carriage so as to prevent any unintentional lifting of the toe which could create a hazard. The forks may not display permanent deformation when subjected to a test load of three times the rated capacity.

(5) Each fork extension or other attachment must be secured to prevent unintentional lifting or displacement on primary forks.

(6) Tires extending beyond the confines of the truck shall be provided with a guard to prevent the tires from throwing particles at the operator.

(7) Unless the steering mechanism is a type that prevents road reactions from causing the steering handwheel to spin, a mushroom type steering knob must be used to engage the palm of the operator's hand, or the steering mechanism must be arranged in some other manner to prevent injury. The knob must be mounted within the perimeter of the wheel.

(8) All steering controls must be confined within the clearnace of the truck or guarded so that movement of the controls will not result in injury to the operator when passing stanchions, obstructions or other.

(g) *Special operating conditions.* (1) A truck may not be used on board a vessel unless prior notification of its use is given to the master or senior deck officer on board.

(2) Before a truck is operated on board a vessel, it must be in a safe operating condition as determined by the master or senior deck officer on board.

(3) Any truck that emits sparks or flames from the exhaust system must immediately be removed from service and may not be returned to service until the cause of these sparks or flames has been eliminated.

(4)–(5) [Reserved]

(6) All truck motors must be shut off immediately when a breakage or leakage of packages containing flammable liquids or gases, flammable solids, oxidizers, or organic peroxides occurs or is discovered.

(7) The rated capacity of the truck must be posted on the truck at all times in a conspicuous place. This capacity may not be exceeded.

(8) At least one Coast Guard approved marine type size 1 Type B, or UL approved 5BC portable fire extinguisher, or its approved equivalent, must be affixed to the truck in a readily accessible position or must be kept in close proximity, available for immediate use.

(9) The vessel's fire fighting equipment, both fixed (where installed) and portable, must be kept ready for immediate use in the vicinity of the space being worked.

(h) *Refueling.* (1) A truck using gasoline as fuel may not be refueled in the hold or on the weather deck of a vessel unless a portable non-spilling fuel handling system of not over five gallons capacity is used. Gasoline may not be transferred to a portable non-spilling fuel handling device on board the vessel.

(2) A truck using liquefied petroleum gas as fuel may not be refueled in the hold or on the weather deck of a vessel unless it is fitted with a removable tank and the hand-operated shutoff valve of the depleted tank is closed. In addition, the motor must be run until it stalls from lack of fuel and then the hand-operated shut off valve closed before the quick disconnect fitting to the fuel tank is disconnected.

(3) A truck using diesel oil as fuel may not be refueled on the weather

deck or in the hold of a vessel unless a portable container of not over a five gallon capacity is used. A truck may be refueled or a portable container may be refilled from a larger container of diesel fuel on the weather deck of a vessel if a suitable pump is used for the transfer operation and a drip pan of adequate size is used to prevent any dripping of fuel on the deck.

(4) Refueling must be performed under the direct supervision of an experienced and responsible person specifically designated for this duty by the person in charge of the loading or unloading of the vessel.

(5) Refueling may not be undertaken with less than two persons specifically assigned and present for the complete operation, at least one of whom must be experienced in using the portable fire extinguishers required in the fuel area.

(6) At least one Coast Guard approved marine type size 1 Type B or UL approved 5BC portable fire extinguisher or its approved equivalent, must be provided in the fueling area. This is in addition to the extinguisher required by paragraph (g)(8) of this section.

(7) The location for refueling trucks must be designated by the master or senior deck officer on board the vessel. ''NO SMOKING'' signs must be conspicuously posted in the area.

(8) The location designated for refueling must be adequately ventilated to insure against accumulation of any hazardous concentration of vapors. When a truck is being refueled, the ventilation requirements of § 176.79 apply.

(9) Before any truck in a hold is refueled or before any fuel handling device or unmounted liquefied petroleum gas cylinder is placed in a hold, the motors of all trucks in the same hold must be stopped.

(10) All fuel handling devices and unmounted liquefied petroleum gas containers must be removed from a hold before any truck motor is started and the trucks are placed in operation in that hold.

(i) *Replacing batteries.* Batteries for electrically powered trucks and for the ignition systems of internal combustion powered trucks may be changed in the hold of a vessel subject to the following conditions:

(1) Only suitable handling equipment may be employed.

(2) Adequate precautions must be taken to avoid damage to the battery, short circuiting of the battery, and spillage of the electrolyte.

(j) *Charging of batteries.* Batteries of industrial trucks may be recharged in a hold of a vessel subject to the following conditions:

(1) The batteries must be housed in a suitable, ventilated, portable metal container with a suitable outlet at the top for connection of a portable air hose, or must be placed directly beneath a suitable outlet at the top for connection of a portable air hose. The air hose must be permanently connected to an exhaust duct leading to the open deck and terminate in a gooseneck or other suitable weather head. If natural ventilation is not practicable or adequate, mechanical means of exhaust must be employed in conjunction with the duct. The air outlet on the battery container must be equipped with an interlock switch so arranged that the charging of the battery cannot take place unless the air hose is properly connected to the box.

(2) If mechanical ventilation is used, an additional interlock must be provided between the fan and the charging circuit so that the fan must be in operation in order to complete the charging circuit for operation. It is preferable that this interlock switch be of a centrifugal type driven by the fan shaft.

(3) The hold may not contain any hazardous materials.

(4) The charging facilities may be part of the truck equipment or may be separate from the truck and located inside or outside the cargo hold. The power supply or charging circuit (whichever method is used) must be connected to the truck by a portable plug connection of the break-away type. This portable plug must be so engaged with the truck battery charging outlet that any movement of the truck away from the charging station will break the connection between the plug and receptacle without exposing any live parts to contact with a conducting surface or object and without the plug

falling to the deck where it may become subject to damage.

(5) All unmounted batteries must be suitably protected or removed from an area in the hold of the vessel before any truck is operated in that area.

(k) *Stowage of power-operated industrial trucks on board a vessel.* Trucks stowed on board a vessel must meet vessel stowage requirements in §176.905.

(l) *Packaging and stowage of fuel on board a vessel.* Division 2.1 (flammable gas) materials and flammable liquids used as fuel for industrial trucks must be packaged and stowed as authorized in 46 CFR 147.60 or 46 CFR 147.45, respectively.

[Amdt. 176–1, 41 FR 16110, Apr. 15, 1976, as amended by Amdt. 176–1A, 41 FR 40687, Sept. 20, 1976; Amdt. 176–30, 55 FR 52689, Dec. 21, 1990; Amdt. 176–39, 61 FR 18933, Apr. 29, 1996; Amdt. 176–43, 62 FR 24741, May 6, 1997]

Subpart D—General Segregation Requirements

§176.80 Application.

(a) This subpart sets forth segregation requirements in addition to any segregation requirements set forth elsewhere in this subchapter.

(b) Hazardous materials in limited quantities when loaded in transport vehicles and freight containers, are excepted from the segregation requirements of this subpart and any additional segregation specified in this subchapter for transportation by vessel.

[Amdt. 176–1, 41 FR 16110, Apr. 15, 1976, as amended by Amdt. 176–3, 42 FR 57967, Nov. 7, 1977]

§176.83 Segregation.

(a) *General.* (1) This section applies to all cargo spaces on deck and under deck on all types of vessels.

(2) Segregation is obtained by maintaining certain distances between incompatible hazardous materials or by requiring the presence of one or more steel bulkheads or decks between them or a combination thereof. Intervening spaces between such hazardous materials may be filled with other cargo which is not incompatible with the hazardous materials.

(3) In addition to general segregation between classes of hazardous materials, there may be a need to segregate a particular material from other materials which would contribute to its hazard. Such segregation requirements are indicated by code numbers in Column 10B of the §172.101 Table.

(4) Segregation is not required between hazardous materials of different classes which comprise the same substance but vary only in their water content (e.g., sodium sulphide in Division 4.2 or Class 8).

(5) Whenever hazardous materials are stowed together, whether or not in a transport unit, the segregation of such hazardous materials from others must always be in accordance with the most restrictive requirements for any of the hazardous materials concerned.

(6) When the §172.101 Table or §172.402 requires packages to bear a subsidiary hazard label or labels, the segregation appropriate to the subsidiary hazards must be applied when that segregation is more restrictive than that required by the primary hazard. For the purposes of this paragraph, the segregation requirements corresponding to an explosive subsidiary hazard are—except for organic peroxides which are those corresponding to Division 1.3—those for Division 1.4 (Class C explosive) materials.

(7) Where, for the purposes of segregation, terms such as ''away from'' a particular hazard class are used in the §172.101 Table, the segregation requirement applies to:

(i) All hazardous materials within the hazard class; and

(ii) All hazardous materials for which a secondary hazard label of that class is required.

(8) Notwithstanding paragraphs (a)(6) and (a)(7) of this section, hazardous materials of the same class may be stowed together without regard to segregation required by secondary hazards if the materials are not incompatible.

(9) Stowage in a shelter-'tween deck cargo space is not considered to be ''on deck'' stowage.

(b) *General Segregation Table.* The following table sets forth the general requirements for segregation between the various classes of hazardous materials. The properties of materials within each

class may vary greatly and may require greater segregation than is reflected in this table. If the § 172.101 Table sets forth particular requirements for segregation, they take precedence over these general requirements.

TABLE § 176.83(b)—GENERAL SEGREGATION REQUIREMENTS FOR HAZARDOUS MATERIALS

[Segregation must also take account of a single secondary hazard label, as required by paragraph (a)(6) of this section.]

Class	1.1 1.2 1.5	1.3	1.4 1.6	2.1	2.2	2.3	3	4.1	4.2	4.3	5.1	5.2	6.1	6.2	7	8	9
Explosives, 1.1, 1.2, 1.5	(*)	(*)	(*)	4	2	2	4	4	4	4	4	4	2	4	2	4	X
Explosives, 1.3	(*)	(*)	(*)	4	2	2	4	3	3	4	4	4	2	4	2	2	X
Explosives, 1.4, 1.6	(*)	(*)	(*)	2	1	1	2	2	2	2	2	2	X	4	2	2	X
Flammable gases 2.1	4	4	2	X	X	X	2	1	2	X	2	2	X	4	2	1	X
Non-toxic, non-flammable gases 2.2	2	2	1	X	X	X	1	X	1	X	X	1	X	2	1	X	X
Poisonous gases 2.3	2	2	1	X	X	X	2	X	2	X	X	2	X	2	1	X	X
Flammable liquids 3	4	4	2	2	1	2	X	X	2	1	2	2	X	3	2	X	X
Flammable solids 4.1	4	3	2	1	X	X	X	X	1	X	1	2	X	3	2	1	X
Spontaneously combustible substances 4.2	4	3	2	2	1	2	2	1	X	1	2	2	1	3	2	1	X
Substances which are dangerous when wet 4.3	4	4	2	X	X	X	1	X	1	X	2	2	X	2	2	1	X
Oxidizing substances 5.1	4	4	2	2	X	X	2	1	2	2	X	2	1	3	1	2	X
Organic peroxides 5.2	4	4	2	2	1	2	2	2	2	2	2	X	1	3	2	2	X
Poisons 6.1	2	2	X	X	X	X	X	X	1	X	1	1	X	1	X	X	X
Infectious substances 6.2	4	4	4	4	2	2	3	3	3	2	3	3	1	X	3	3	X
Radioactive materials 7	2	2	2	2	1	1	2	2	2	2	1	2	X	3	X	2	X
Corrosives 8	4	2	2	1	X	X	X	1	1	1	2	2	X	3	2	X	X
Miscellaneous dangerous substances 9	X	X	X	X	X	X	X	X	X	X	X	X	X	X	X	X	X

Numbers and symbols relate to the following terms as defined in this section:

1—''Away from.''
2—''Separated from.''
3—''Separated by a complete compartment or hold from.''
4—''Separated longitudinally by an intervening complete compartment or hold from.''
X—The segregation, if any, is shown in the § 172.101 Table.
*—See § 176.144 of this part for segregation within Class 1.

(c) *Segregation requirements for breakbulk cargo.* (1) The requirements of this paragraph apply to the segregation of packages containing hazardous materials and stowed as breakbulk cargo;

(2) Definition of the segregation terms:

(i) Legend:

(A) Package containing incompatible goods.

(B) Reference package.

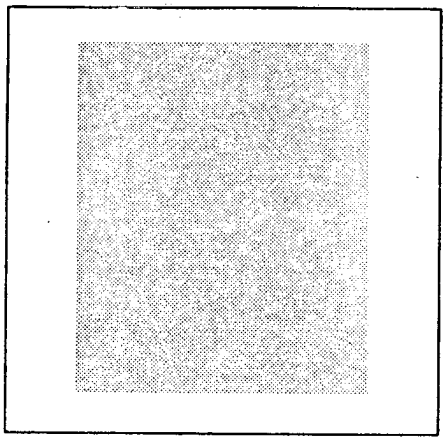

(C) Deck resistant to fire and liquid.

NOTE: Full vertical lines represent transverse bulkheads between compartments or holds resistant to fire and liquid.

(ii) *''Away from'':* Effectively segregated so that the incompatible materials cannot interact dangerously in the event of an accident but may be carried in the same compartment or hold or on deck provided a minimum horizontal separation of 3 meters (10 feet) projected vertically is obtained.

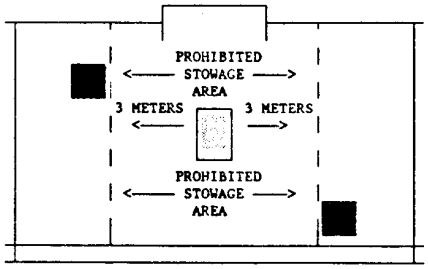

(iii) *''Separated From'':* In different compartments or holds when stowed under deck. If the intervening deck is resistant to fire and liquid, a vertical separation (i.e., in different compartments accepted as equivalent to this segregation. For ''on deck'' stowage, this segregation means a separation by a distance of at least 6 meters (20 feet) horizontally.

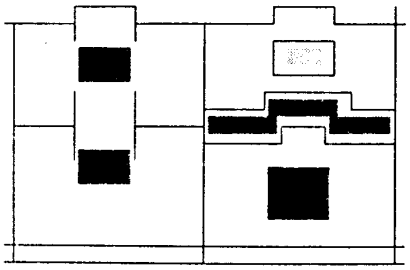

(iv) *''Separated by a complete compartment or hold from''*: Either a vertical or horizontal separation. If the intervening decks are not resistant to fire and liquid, then only a longitudinal separation (i.e., by a intervening complete compartment or hold) is acceptable. For ''on deck'' stowage, this segregation means a separation by a distance of at least 12 meters (39 feet) horizontally. The same distance must be applied if one package is stowed ''on deck, and the other one in an upper compartment.

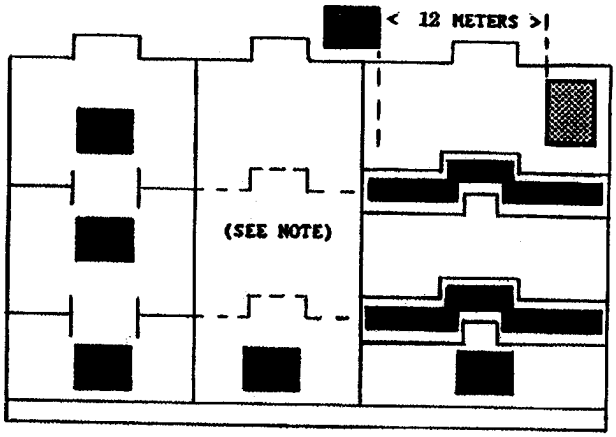

NOTE: One of the two decks must be resistant to fire and liquid.

(v) ''*Separated longitudinally by an intervening complete compartment or hold from*'': Vertical separation alone does not meet this requirement. Between a package ''under deck'' and one ''on deck'' a minimum distance of 24 meters (79 feet) including a complete compartment must be maintained longitudinally. For ''on deck'' stowage, this segregation means a separation by a distance of at least 24 meters (79 feet) longitudinally.

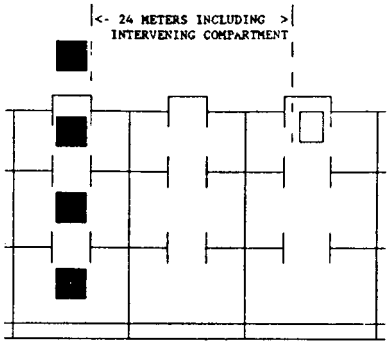

(d) *Segregation in transport units:* Two hazardous materials for which any segregation is required may not be stowed in the same transport unit.

(e) *Segregation of hazardous materials stowed as breakbulk cargo from those packed in transport units:* (1) Hazardous materials stowed as breakbulk cargo must be segregated from materials packed in open transport units in accordance with paragraph (c) of this section.

(2) Hazardous materials stowed as breakbulk cargo must be segregated from materials packed in closed transport units in accordance with paragraph (c) of this section, except that:

(i) Where ''away from'' is required, no segregation between packages and the closed transport units is required; and

(ii) Where ''separated from'' is required, the segregation between the packages and the closed transport units may be the same as for ''away from''.

(f) *Segregation of containers on board container vessels:* (1) This paragraph applies to the segregation of freight containers which are carried on board container vessels, or on other types of vessels provided these cargo spaces are properly fitted for permanent stowage of freight containers during transport.

(2) For container vessels which have cargo spaces used for breakbulk cargo or any other method of stowage, the appropriate paragraph of this section applies to the relevant cargo space.

(3) *Segregation Table:* Table §176.83(f) sets forth the general requirements for segregation between freight containers on board container vessels.

(4) In Table §176.83(f), a *container space* means a distance of not less than

6 m (20 feet) fore and aft or not less than 2.5 m (8 feet) athwartship.

TABLE 176.83(f).—SEGREGATION OF CONTAINERS ON BOARD CONTAINER SHIPS

Segregation requirement	Vertical			Horizontal						
	Closed versus closed	Closed versus open	Open versus open		Closed versus closed		Closed versus open		Open versus open	
					On deck	Under deck	On deck	Under deck	On deck	Under deck
1. ''Away from''	One on top of the other permitted.	Open on top of closed permitted. Otherwise as for open versus open.	Not in the same vertical line unless segregated by a deck.	Fore and aft ..	No restriction	No restriction	No restriction	No restriction	One container space.	One container space or one bulkhead.
				Athwartships ..	No restriction	No restriction	No restriction	No restriction	One container space.	One container space.
2. ''Separated from''.	Not in the same vertical line unless segregated by a deck.	As for open versus open.	Not in the same vertical line unless segregated by a deck.	Fore and aft ..	One container space.	One container space or one bulkhead.	One container space.	One container space or one bulkhead.	One container space..	One bulkhead.
				Athwartships ..	One container space.	One container space.	One container space.	Two container spaces.	Two container spaces..	One bulkhead.
3. ''Separated by a complete compartment or hold from''.	Not in the same vertical line unless segregated by a deck.	As for open versus open.	Not in the same vertical line unless segregated by a deck.	Fore and aft ..	One container space.	One bulkhead	One container space.	One bulkhead	Two container spaces.	Two bulkheads.
				Athwartships ..	Two container spaces.	One bulkhead	Two container spaces.	One bulkhead	Three container spaces.	Two bulkheads.
4. ''Separated longitudinally by an intervening complete compartment or hold from''.	Prohibited	.....	.....	Fore and aft ..	Four container spaces.	One bulkhead and four container spaces*.	Four container spaces.	Two bulkheads.	Four container spaces.	Two bulkheads.
				Athwartships ..	Prohibited	Prohibited	Prohibited	Prohibited	Prohibited	Prohibited.

*Containers not less than 6 meters (20 feet) from intervening bulkhead.

Note: All bulkheads and decks must be resistant to fire and liquid.

(g) *Segregation of transport units on board trailerships:* (1) The requirements of this paragraph apply to the segregation of transport units which are carried on board trailerships or in ''roll-on/roll-off'' cargo spaces.

(2) For trailerships which have spaces suitable for breakbulk cargo, containers, or any other method of stowage, the appropriate paragraph of this section applies to the relevant cargo space.

(3) *Segregation Table.* Table § 176.83(g) sets forth the general requirements for segregation between transport units on board trailerships.

TABLE 176.83(g)—SEGREGATION OF TRANSPORT UNITS ON BOARD TRAILERSHIPS AND TRAINSHIPS.

Segregation requirement		Closed versus closed		Closed versus open		Open versus open	
		On deck	Under deck	On deck	Under deck	On deck	Under deck
1. ''Away From''	Fore and aft.	No restriction.	No restriction.	No restriction.	No restriction.	No restriction.	At least 3 meters.
	Athwartships.	No restriction.	No restriction.	No restriction.	No restriction.	No restriction.	At least 3 meters.
2. ''Separated from''	Fore and aft.	At least 6 meters.	At least 6 meters or one bulkhead.	At least 6 meters.	At least 6 meters or one bulkhead.	At least 6 meters.	At least 12 meters or one bulkhead
	Athwartships.	At least 3 meters.	At least 3 meters or one bulkhead.	At least 3 meters.	At least 6 meters or one bulkhead.	At least 6 meters.	At least 12 meters or one bulkhead
3. ''Separated by a complete compartment or hold from''.	Fore and aft.	At least 12 meters.	At least 24 meters + deck.	At least 24 meters.	At least 24 meters + deck.	At least 36 meters.	Two decks or two bulkheads.
	Athwartships.	At least 12 meters.	At least 24 meters + deck.	At least 24 meters.	At least 24 meters + deck.	At least 36 meters.	Prohibited.
4. ''Separated longitudinally by an intervening complete compartment or hold from''.	Fore and aft.	At least 36 meters.	Two bulkheads or at least 36 meters + two decks.	At least 36 meters.	At least 48 meters including two bulkheads.	At least 48 meters.	Prohibited.
	Athwartships.	Prohibited	Prohibited	Prohibited	Prohibited	Prohibited	Prohibited.

NOTE: All bulkheads and decks must be resistant to fire and liquid.

(h) *Segregation on board barge carrying vessels:* (1) The requirements of this section apply to the segregation in shipborne barges as well as to the segregation between shipborne barges carried on board vessels specially designed and equipped to carry such barges.

(2) On barge-carrying vessels which incorporate other stowage spaces or any other method of stowage, barges containing hazardous materials must be segregated from hazardous materials not stowed in barges as prescribed in paragraphs (b) and (j) of this section.

(i) *Segregation in shipborne barges:* Hazardous materials transported in shipborne barges must be segregated as prescribed in paragraphs (a), (b), and (c) of this section.

(j) *Segregation between shipborne barges on barge-carrying vessels:* (1) When a shipborne barge is loaded with two or more hazardous materials with different requirements for segregation, the most stringent applicable segregation requirement must be applied.

(2) ''Away from'' and ''separated from'' require no segregation between shipborne barges.

(3) For barge-carrying vessels with vertical holds, ''Separated by a complete compartment or hold from'' means that separate holds are required.

On barge-carrying vessels having horizontal barge levels, separate barge levels are required and the barges may not be in the same vertical line.

(4) ''Separated longitudinally by an intervening complete compartment or hold from'' means, for barge-carrying vessels with vertical holds, that separation by an intervening hold or engine room is required. On barge-carrying vessels having horizontal barge levels, separate barge levels and a longitudinal separation by at least two intervening barge spaces are required.

(k) *Segregation requirements for ferry vessels:* A ferry vessel (when operating either as a passenger or cargo vessel) that cannot provide the separation required in this section may carry incompatible hazardous materials in separate transport vehicles if they are stowed to give the maximum possible separation.

[Amdt. 176–30, 55 FR 52690, Dec. 21, 1990, as amended at 56 FR 66282, Dec. 20, 1991; 57 FR 45465, Oct. 1, 1992; Amdt. 176–34, 58 FR 51533, Oct. 1, 1993; Amdt. 176–38, 60 FR 49111, Sept. 21, 1995]

§176.84 Other requirements for stowage and segregation for cargo vessels and passenger vessels.

(a) *General.* When Column 10B of the §172.101 Table refers to a numbered or alpha-numeric stowage provision for water shipments, the meaning and requirements of that provision are as set forth in this section. Terms in quotation marks are defined in §176.83.

(b) *Table of provisions:*

Code	Provisions
1	[Reserved]
2	Temperature controlled material.
3	Do not stow with high explosives.
4	[Reserved]
5	[Reserved]
6	Emergency temperature material.
7	[Reserved]
8	Glass carboys not permitted on passenger vessels.
9	Glass carboys not permitted under deck.
10	Glass bottles not permitted under deck.
11	Keep away from heat and open flame.
12	Keep as cool as reasonably practicable.
13	Keep as dry as reasonably practicable.
14	For metal drums, stowage permitted under deck on cargo vessels.
15	May be stowed in portable magazine or metal locker.
16	No other cargo may be stowed in the same hold with this material.
17	Segregation same as for flammable gases but ''away from'' dangerous when wet.
18	Prohibited on any vessel carrying explosives (except explosives in Division 1.4, Compatibility group S).
19	Protect from sparks and open flames.
20	Segregation same as for corrosives.
21	Segregation same as for flammable liquids.
22	Segregation same as for flammable liquids if flash point below 61 °C (142 °F).
23	Segregation same as for flammable liquids if flash point between 23 °C (73 °F) and 61 °C (142 °F).
24	Segregation same as for flammable solids.
25	Shade from radiant heat.
26	Stow ''away from'' acids.
27	Stow ''away from'' alkaline compounds.
28	Stow ''away from'' flammable liquids.
29	Stow ''away from'' ammonium compounds.
30	Stow ''away from'' animal or vegetable oils.
31	Stow ''away from'' combustible materials.
32	Stow ''away from'' copper, its alloys and its salts.
33	Stow ''away from'' fluorides.
34	Stow ''away from'' foodstuffs.
35	Stow ''away from'' all odor-absorbing cargo.
36	Stow ''away from'' heavy metals and their compounds.
37	Stow ''away from'' hydrazine.
38	Stow ''away from'' all other corrosives.
39	Stow ''away from'' liquid halogenated hydrocarbons.
40	Stow ''clear of living quarters''.
41	Stow ''away from'' mercury and its compounds.
42	Stow ''away from'' nitric acids and perchloric acids not exceeding 50 percent acid by weight.
43	Stow ''away from'' organic materials.
44	Stow ''away from'' oxidizers.
45	Stow ''away from'' permanganates.
46	Stow ''away from'' powdered metals.
47	Stow ''away from'' sodium compounds.
48	Stow ''away from'' sources of heat.
49	Stow ''away from'' corrosives.
50	Stow ''away from'' sources of heat where temperatures in excess of 55 °C (131 °F) for a period of 24 hours or more will be encountered.
51	Stow ''separated from'' acetylene.
52	Stow ''separated from'' acids.
53	Stow ''separated from'' alkaline compounds.
54	Stow ''separated from'' animal or vegetable oils.
55	Stow ''separated from'' ammonia.
56	Stow ''separated from'' ammonium compounds.
57	Stow ''separated from'' chlorine.
58	Stow ''separated from'' cyanides.
59	Stow ''separated from'' combustible materials.
60	Stow ''separated from'' chlorates, chlorites, hypochlorites, nitrites, perchlorates, permanganates, and metallic powders.
61	Stow ''separated from'' corrosive materials.
62	Stow ''separated from'' diborane.
63	Stow ''separated from'' diethylene triamine.
64	Stow ''separated from'' explosives.
65	Stow ''separated from'' flammable substances.
66	Stow ''separated from'' flammable solids.
67	Stow ''separated from'' halides.
68	Stow ''separated from'' hydrogen.
69	Stow ''separated from'' hydrogen peroxide.
70	Stow ''separated from'' mercury salts.
71	Stow ''separated from'' nitric acid.

Code	Provisions
72	Stow ''separated from'' nitrogen compounds.
73	Stow ''separated from'' chlorates.
74	Stow ''separated from'' oxidizers.
75	Stow ''separated from'' permanganates.
76	Stow ''separated by a complete compartment or hold from'' organic peroxides.
77	Stow ''separated longitudinally by a complete compartment or hold from'' explosives.
78	Stow ''separated longitudinally by an intervening complete compartment or hold from'' explosives.
79	The maximum net quantity in one package for this material shipped aboard a passenger vessel is limited to 22.7 kg (50 pounds).
80	Toy torpedoes must not be packed with other special fireworks.
81	Under deck stowage permitted only if an indicating substance such as chloropicrin has been added.
82	Under deck stowage is permitted only if containing not more than 36 percent by weight of hydrazine.
83	[Reserved]
84	Under deck stowage must be in well-ventilated space.
85	Under deck stowage must be in mechanically ventilated space.
86	Stow ''separated by a complete compartment or hold from'' explosives Division 1.3.
87	Stow ''separated from'' Class 1 (explosives) except Division 1.4.
88	Stow ''separated by a complete compartment or hold from'' Class 1 (explosives) except Division 1.4.
89	Segregation same as for oxidizers.
90	Stow ''separated from'' radioactive materials.
91	Stow ''separated from'' flammable liquids.
92	Stow ''separated from'' powdered materials.
93	Stow not accessible to unauthorized persons on passenger vessels.
94	Plastic jerricans and plastic drums not permitted under deck.
95	Stow ''separated from'' foodstuffs.
96	Glass carboys not permitted under deck on passenger vessels.
97	Stow ''away from'' azides.
98	Stow ''away from'' all flammable materials.
99	Only new metal drums permitted on passenger vessels.
100	Stow ''away from'' flammable solids.
101	Stow ''separated from'' iron oxide.
102	Stow ''separated from'' all odor absorbing cargoes.
103	Only to be loaded under dry weather conditions.
104	Stow ''separated from'' bromine.
105	As approved by the Competent Authority of the country concerned.
106	Stow ''separated from'' powdered metal.
107	Stow ''separated from'' peroxides and superoxides.
108	The transport temperature should be indicated on the tank.
109	Label as a flammable liquid if flash point is 61 °C (142 °F) or below.
110	Packaging Group II if concentration does not exceed 70 percent acid.
111	If concentration exceeds 50 percent acid, notes 66, 74, 89, and 90 apply.
112	Packaging Group II for concentrations not less that 50 percent and Packaging Group III for concentrations less than 50 percent.
113	Packaging Group II if concentrations does not exceed 60 percent acid.
114	Corrosive subsidiary risk label required unless concentration is less than 80 percent.
115	If packaged in glass or earthenware inner packagings in wooden or fiberboard outer packagings, the maximum quantity on any vessel is 500 kg (equivalent to 450 liters).
116	In a cargo space capable of being opened up in an emergency. The possible need to open hatches in case of fire to provide maximum ventilation and to apply water in an emergency and the consequent risk to the stability of the ship through flooding of the cargo space should be considered before loading.
117	In a clean cargo space capable of being opened up in an emergency. In the case of bagged fertilizer in freight containers, it is sufficient if in the case of an emergency, the cargo is accessible through free approaches (hatch entries) and mechanical ventilation enables the master to exhaust any gases or fumes resulting from decomposition. The possible need to open hatches in case of fire to provide maximum ventilation and to apply water in an emergency and the consequent risk to the stability of the ship through flooding of the cargo space should be considered before loading.
118	Stowage—Category D, Category E freight containers and pallet boxes only. Ventilation may be required. The possible need to open hatches in a case of fire to provide maximum ventilation and to supply water in an emergency, and the consequent risk to the stability of the ship through flooding of the cargo space, should be considered before loading.
119	Double strip stowage recommended.
120	Provide good surface and through ventilation.
121	Packaging group III when the flash point of the flammable liquid is 23 °C (73 °F) or above.
122	Stow ''separated from'' infectious substances.
123	Stow ''away from'' infectious substances.
M1—M6	[Reserved]

(c) *Provisions for the stowage of Class 1 (explosive) materials:* (1) Unless otherwise specified in Column 10B of the § 172.101 Table, explosive substances and explosive articles must be stowed as follows:

(i) *On deck:* In containers or the like.

(ii) *Under deck:* Ordinary stowage.

(2) The following notes in Column 10B of the § 172.101 Table apply to the transport of Class 1 (explosive) materials by vessel:

Note	Provision
1E	Cargo vessel, on deck, in containers or the like.
2E	Cargo vessel, on deck, in portable magazines.
3E	Cargo vessel, on deck, secured to the vessel's structure.
4E	Cargo vessel, under deck, Magazine, Type A.
5E	Cargo vessel, under deck, Magazine, Type B.
6E	Cargo vessel, under deck, Magazine, Type C.
7E	Cargo vessel, under deck, Ordinary Stowage.
8E	Cargo vessel, under deck, Special Stowage.
9E	Passenger vessel, stowage as for cargo vessel.
10E	Magazine, Type B, if in effectively sealed dust-tight packages; otherwise, Magazine, Type A.
11E	On-deck portable magazine must be steel.
12E	Stowage as specified by Competent Authority.
13E	On deck, in containers not exceeding 2.5 metric ton gross per container or group. There may not be more than 2 such containers or groups; they must be separated from each other, and from any other explosive substance or article by at least 9 m (30 feet). Containers or groups must be at least 9 m (30 feet) from the bridge or accommodation.
14E	On deck, in steel portable magazines or steel freight containers.
15E	On-deck, containers must be leakproof.
16E	On deck, in containers or sheeted stacks. The gross weight of each stack or group of containers may not exceed 2.5 metric ton. There may not be more than 2 stacks or groups of containers; they must be separated from each other, and from any other explosive substances or articles by at least 9 m (30 feet). Stacks or containers must be at least 9 m (30 feet) from the bridge or accommodation.
17E	On deck stowage is recommended.
18E	For international shipments, stow in the same manner as is required for ''cartridges for weapons' inert projectile'' UN 0012, Division 1.4S.
19E	Substances which contain ammonium nitrate or other ammonium salts must be stowed ''away from'' Explosives, Blasting, Type C, UN 0083.
20E	Stow in accordance with §176.84(c)(3) of this subchapter.
21E	Cargo space ventilation must be carefully controlled to avoid excessive condensation.
22E	May not be stowed together with explosive substances containing ammonium nitrate or other ammonium salts.
23E	Segregate from other Class 1 (explosive) materials in the same manner as is required for flammable liquids.
24E	Passenger vessels, on deck or under deck, in portable magazines only.
25E	Passenger vessels, in containers or the like, on deck only.
26E	Cargo vessel, on deck, in containers or the like (non-metallic lining is necessary if not in sealed dust tight packages).
27E	Cargo vessel, on deck, in containers or the like (non-metallic lining is necessary).
28E	Cargo vessel, when items are transported as projectiles or cartridges for guns, cannons, or mortars, notes 1E and 7E are applicable. All other times, notes 14E, 15E, and 8E are applicable.

(3) Explosive articles designated by special provision ''20E'' in Column 10B of the 172.101 Table must be stowed as follows:

(i) Projectiles for guns, cannon, or mortars:

(A) *On deck:* in containers or the like.

(B) *Under deck:* ordinary stowage.

(ii) All other types:

(A) *On deck:* in steel portable magazines or steel freight containers which are capable of preventing leakage of their contents.

(B) *Under deck:* Special stowage.

[Amdt. 176–30, 55 FR 52693, Dec. 21, 1990, as amended at 56 FR 66282, Dec. 20, 1991; Amdt. 176–43, 62 FR 24742, May 6, 1997]

Subpart E—Special Requirements for Transport Vehicles Loaded With Hazardous Materials and Transported on Board Ferry Vessels

§176.88 Application.

The requirements in this subpart are applicable to transport vehicles containing hazardous materials being transported on board ferry vessels and are in addition to any prescribed elsewhere in this subchapter. Vessels in a service similar to a ferry service, but not over a designated ferry route, may be treated as a ferry vessel for the purpose of this subpart if approved in writing by the District Commander.

[Amdt. 176–1, 41 FR 16110, Apr. 15, 1976, as amended by Amdt. 176–1A, 41 FR 40690, Sept. 20, 1976]

§176.89 Control of transport vehicles.

(a) A transport vehicle containing hazardous materials may be transported on board a ferry vessel, subject to the following conditions:

(1) The operator or person in charge of the vehicle shall deliver to the vessel's representative a copy of the shipping papers and certificate required by §§176.24 and 176.27;

(2) The vehicle shall be placed at the location indicated by the vessel's representative;

(3) The parking brakes of the vehicle shall be set securely to prevent movement;

(4) The motor of a highway vehicle shall be shut off and not restarted until the vessel has completed its voyage and docked;

(5) All vehicle lights shall be cut off and not relighted until the vessel has completed its voyage and docked;

(6) The operator of a highway vehicle shall remain with the vehicle;

(7) No repairs or adjustments must be made to the vehicle while it is on the vessel;

(8) No hazardous materials are to be released from the vehicle; and

(9) Any instructions given by the vessel's representative during the voyage, and during ''roll on'' and ''roll off'' operations must be observed.

(b) Smoking by any person in or around a vehicle is prohibited.

§ 176.90 Private automobiles.

A private automobile which is carrying any Class 1 (explosive) material (except permitted fireworks or small arms ammunition) may not be transported on a passenger-carrying ferry vessel unless the Class 1 (explosive) material is in compliance with packaging, labeling, marking, and certification requirements of this subchapter. Permitted fireworks and small arms ammunition may be carried without the required packaging, labeling, marking, or certification if they are in tight containers.

[Amdt. 176–1, 41 FR 16110, Apr. 15, 1976, as amended by Amdt. 176–30, 55 FR 52695, Dec. 21, 1990]

§ 176.91 Motorboats.

A motorboat may be transported on board a ferry vessel with gasoline in the tank and two other containers not exceeding 23 L (six gallons) capacity each if they are in the motorboat, closed, and in good condition.

[Amdt. 176–1, 41 FR 16110, Apr. 15, 1976, as amended by Amdt. 176–30, 55 FR 52695, Dec. 21, 1990]

§ 176.92 Cylinders laden in vehicles.

Any cylinder of Class 2 (compressed gas) material which is required to have a valve protection cap fitted in place may be transported on board a ferry vessel without having the valve protection cap in place when it is laden in a transport vehicle and is not removed from the vehicle while on the vessel.

[Amdt. 176–1, 41 FR 16110, Apr. 15, 1976, as amended by Amdt. 176–30, 55 FR 52695, Dec. 21, 1990]

§ 176.93 Vehicles having refrigerating or heating equipment.

(a) A transport vehicle fitted with refrigerating or heating equipment using a flammable liquid or Division 2.1 (flammable gas) material, or diesel oil as fuel, may be transported on a ferry vessel. However, the refrigerating or heating equipment may not be operated while the vehicle is on the vessel, unless the equipment complies with the following requirements:

(1) The installation is rigidly mounted and free of any movement other than normal vibration in operation;

(2) An easily accessible shutoff control is fitted to the fuel and electrical supply of the refrigerating or heating equipment; and

(3) The fuel storage tank, the fuel lines, the carburetor and any other fuel devices are tight and show no signs of leakage.

(b) If the vehicle operator desires to operate the refrigerating or heating equipment while on the vessel and the equipment is not fitted with automatic starting and stopping devices, it must be started before the vehicle is taken on board. It may continue in operation while the vehicle is on the vessel, but if the motor stops it may not be restarted.

(c) In the case of a ferry vessel on a voyage exceeding 30 minutes' duration, stowage must be provided for transport vehicles having refrigerating or heating equipment operated by internal combustion engines which will permit ready diffusion of exhaust gases to the open air. Passenger vehicles may not be stowed in a position adjacent to vehicles operating internal combustion motors which expose the occupants of the passenger vehicles to excessive

concentrations of exhaust fumes from such motors.

(d) A transport vehicle containing solid carbon dioxide as a refrigerant may be transported on a ferry vessel only if it is stowed in a well ventilated location.

[Amdt. 176–1, 41 FR 16110, Apr. 15, 1976, as amended by Amdt. 176–30, 55 FR 52695, Dec. 21, 1990]

Subpart F—Special Requirements for Barges

SOURCE: Amdt. 176–8, 44 FR 23228, Apr. 19, 1979, unless otherwise noted.

§176.95 Application.

The requirements prescribed in this subpart are applicable to the transportation of packaged hazardous materials on board barges. The requirements prescribed elsewhere in this subchapter for vessels similarly apply, except as provided in this subpart, to the transportation of packaged hazardous materials on board barges.

§176.96 Materials of construction.

Barges used to transport hazardous materials must be constructed of steel.

[Amdt. 176–30, 55 FR 52695, Dec. 21, 1990]

§176.97 Prohibition of dump scows.

Dump scows are barges having cargo carrying compartments of the hopper type and fitted with a bottom dump or a side dump. This type of barge is prohibited from the carriage of any class of hazardous material.

§176.98 Stowage of hazardous materials on board barges.

A material for which ''on deck'' stowage only is required by Column (10) of the Hazardous Materials Table (§172.101 of this subchapter) may be stowed ''under deck'' on unmanned barges.

[Amdt. 176–8, 44 FR 23228, Apr. 19, 1979, as amended by Amdt. 176–30, 55 FR 52695, Dec. 21, 1990]

§176.99 Permit requirements for certain hazardous materials.

The permits required by §§176.100 and 176.415 for loading, unloading, and handling Divisions 1.1 and 1.2 (Class A and B explosives) materials, Division 1.5 (blasting agents) materials, ammonium nitrate and certain ammonium nitrate mixtures and fertilizers must be obtained before these materials may be loaded on, unloaded from, or handled on board a barge or barge-carrying vessel. However, a barge loaded with these materials being placed on, removed from, or handled on board a barge-carrying vessel is not subject to these permit requirements.

[Amdt. 176–30, 55 FR 52695, Dec. 21, 1990, as amended at 56 FR 66282, Dec. 20, 1991]

Subpart G—Detailed Requirements for Class 1 (Explosive) Materials

SOURCE: Amdt. 176–30, 55 FR 52696, Dec. 21, 1990, unless otherwise noted.

§176.100 Permit for Divisions 1.1 and 1.2 (Classes A and B explosive) materials.

Before Divisions 1.1 and 1.2 (Classes A and B explosive) materials may be discharged from, loaded on, handled or restowed on board a vessel at any place in the United States, the carrier must obtain a permit from the COTP in accordance with the procedures in 33 CFR 126.19. Exceptions to this permit requirement may be authorized by the COTP.

[Amdt. 176–30, 55 FR 52696, Dec. 21, 1990, as amended by Amdt. 176–34, 58 FR 51533, Oct. 1, 1993]

§176.102 Supervisory detail.

(a) Except as provided in paragraph (c) of this section, the COTP may assign a USCG supervisory detail to any vessel to supervise the loading, handling or unloading of Class 1 (explosive) materials.

(b) The owner, agent, charterer, master or person in charge of the vessel, and all persons engaged in the handling, loading, unloading, and stowage of Class 1 (explosive) materials shall obey all orders that are given by the officer in charge of the supervisory detail.

(c) If Class 1 (explosive) materials are loaded onto or unloaded from a vessel at a facility operated or controlled by the Department of Defense, the Commanding Officer of that facility may

decline the USCG supervisory detail. Whenever the supervisory detail is declined, the Commanding Officer of the facility shall ensure compliance with the regulations in this part.

§ 176.104 Loading and unloading Class 1 (explosive) materials.

(a) Packages of Class 1 (explosive) materials may not be thrown, dropped, rolled, dragged, or slid over each other or over a deck.

(b) When Class 1 (explosive) materials are stowed in a hold below one in which any cargo is being handled, the hatch in the deck dividing the two holds must have all covers securely in place.

(c) Drafts of Class 1 (explosive) materials must be handled in accordance with the following:

(1) A draft may not be raised, lowered, or stopped by sudden application of power or brake.

(2) A draft may not be released by tripping or freeing one side of the cargo-handling equipment and tumbling the Class 1 (explosive) materials off.

(3) All drafts, beams, shackles, bridles, slings, and hoods must be manually freed before the winch takes control.

(4) Slings may not be dragged from under a draft by winching except for the topmost layer in the hold when power removal is the only practical method and when the cargo cannot be toppled.

(5) Handles or brackets on packages in a draft may not be used for slinging purposes.

(d) A combination woven rope and wire sling or a sling that is formed by use of an open hook may not be used in handling Class 1 (explosive) materials.

(e) Only a safety hook or a hook that has been closed by wire may be used in handling drafts of Class 1 (explosive) materials.

(f) Wire rope or wire rope assemblies, including splices and fittings, used in handling Class 1 (explosive) materials must be unpainted and kept bare to permit inspection of their safe working condition. A mechanical end fitting (pressed fitting) may be used in place of a eye splice, if the efficiency of the mechanical end fitting is at least equal to the efficiency of an eye splice prepared as prescribed in 29 CFR 1918.51(c)(1).

(g) Packages of Division 1.1 and 1.2 (Class A and B explosive) materials which are not part of a palletized unit must be loaded and unloaded from a vessel using a chute or conveyor as described in § 176.163, or a mechanical hoist and a pallet, skipboard, tray, or pie plate fitted with a cargo net or sideboards.

(h) Packages of Division 1.1 and 1.2 (Class A and B explosive) materials must be loaded or unloaded in accordance with the following:

(1) A cargo net with a pallet, skipboard, tray, or pie plate, must be loaded so that no more than a minimum displacement of packages occurs when it is lifted.

(2) A cargo net must completely encompass the bottom and sides of the draft. The mesh of the cargo net must be of a size and strength that will prevent a package in the draft from passing through the net.

(3) When a tray is used in handling packages, no package may extend more than one-third its vertical dimension above the sideboard of the tray.

(i) A landing mat must be used when a draft of nonpalletized Division 1.1 or 1.2 (Class A and B explosive materials) is deposited on deck. The landing mat must have dimensions of at least l m (3 feet) wide, 2 m (7 feet) long, and 10 cm (3.9 inches) thick, and be made of woven hemp, sisal, or similar fiber, or foam rubber, polyurethane or similar resilient material.

(j) In addition to the other requirements of this section, packages of Division 1.1 and 1.2 (Class A and B explosive) materials must be handled in accordance with the following:

(1) Packages may not be loaded or unloaded through a hatch at the same time that other cargo is being handled in any hold served by that hatch.

(2) Packages may not be loaded or unloaded from the same hatch by using two pieces of cargo equipment unless the equipment is positioned at the forward and aft ends of the hatch.

(3) Packages may not be lifted over any hazardous materials.

(4) The height of any structure, equipment, or load on a deck over which packages must be lifted may not

be higher than the hatch coaming or bulwark, or 1 m (3 feet), whichever is greater.

(k) Unpackaged explosive devices may not be handled by their lifting lugs or suspension lugs.

(l) A chute may not be used when loading or unloading Class 1 (explosive) materials in compatibility group A or B.

[Amdt. 176–30, 55 FR 52696, Dec. 21, 1990, as amended by Amdt. 176–40, 61 FR 27175, May 30, 1996]

§176.108 Supervision of Class 1 (explosive) materials during loading, unloading, handling and stowage.

(a) During the loading, unloading, handling and stowage of Class 1 (explosive) materials, a responsible person shall be in constant attendance during the entire operation to direct the loading, unloading, handling and stowage of Class 1 (explosive) materials, including the preparation of the holds. The responsible person must be aware of the hazards involved and the steps to be taken in an emergency, and must maintain sufficient contact with the master to ensure proper steps are taken in an emergency.

(b) Each person involved in the handling of Class 1 (explosive) materials on a vessel shall obey the orders of the responsible person.

(c) The responsible person must inspect all cargo-handling equipment to determine that it is in safe operating condition before it is used to handle Class 1 (explosive) materials.

STOWAGE

§176.112 Application of stowage provisions.

The provisions of §§176.116(e), 176,118, and 176.120 of this subpart do not apply to Division 1.4 (Class C explosive) materials, compatibility group S. Such materials may be stowed together with all other Class 1 (explosive) materials except those of compatibility group A or L. They must be segregated from other hazardous materials in accordance with Table 176.83(b) of this part.

§176.116 General stowage conditions for Class 1 (explosive) materials.

(a) *Heat and sources of ignition:* (1) Class 1 (explosive) materials must be stowed in a cool part of the ship and must be kept as cool as practicable while on board. Stowage must be well away from all sources of heat, including steam pipes, heating coils, sparks, and flame.

(2) Except where the consignment of Class 1 (explosive) materials consists only of explosive *articles,* the wearing of shoes or boots with unprotected metal nails, heels, or tips of any kind is prohibited.

(b) *Wetness:* (1) Spaces where Class 1 (explosive) materials are stowed below deck must be dry. In the event of the contents of packages being affected by water when on board immediate advice must be sought from the shippers; pending this advice handling of the packages must be avoided.

(2) Bilges and bilge sections must be examined and any residue of previous cargo removed before Class 1 materials (explosive) are loaded onto the vessel.

(c) *Security:* All compartments, magazines, and transport units containing Class 1 (explosive) materials must be locked or suitably secured in order to prevent unauthorized access.

(d) *Secure stowage:* Class 1 (explosive) materials must be securely stowed to prevent movement in transit; where necessary, precautions must be taken to prevent cargo sliding down between the frames at the ship's sides.

(e) *Separation from accommodation spaces and machinery spaces:* (1) Class 1 (explosive) materials must be stowed as far away as practicable from any accommodation spaces or any machinery space and may not be stowed directly above or below such a space. The requirements in paragraphs (e)(2) through (e)(4) of this section are minimum requirements in addition to the applicable requirements of 46 CFR chapter I. Where the requirements of this subpart are less stringent than those of 46 CFR chapter I, the 46 CFR chapter I requirements must be satisfied for ships to which they are applicable.

(2) There must be a permanent A Class steel bulkhead between any accommodation space and any compartment containing Class 1 (explosive) materials. Division 1.1 and 1.2 (Class A and B explosive) materials, 1.3 (Class B explosive) materials, or 1.5 (blasting agents) materials may not be stowed within 3 m (10 feet) of this bulkhead; in the decks immediately above or below an accommodation space they must be stowed at least 3 m (10 feet) from the line of this bulkhead projected vertically.

(3) There must be a permanent A Class steel bulkhead between a compartment containing Class 1 (explosive) materials and any machinery space. Class 1 (explosive) materials, except those in Division 1.4 (Class C explosive), may not be stowed within 3 m (10 feet) of this bulkhead; and in the decks above or below the machinery space they must be stowed at least 3 m (10 feet) from the line of this bulkhead projected vertically. In addition to this separation, there must be insulation to Class A60 standard as defined in 46 CFR 72.05–10(a)(1) if the machinery space is one of Category 'A' unless the only Class 1 (explosive) materials carried are in Division 1.4S (Class C explosive).

(4) Where Class 1 (explosive) materials are stowed away from bulkheads bounding any accommodation space or machinery space, the intervening space may be filled with cargo that is not readily combustible.

§ 176.118 Electrical requirement.

(a) Electrical equipment and cables installed in compartments in which Class 1 (explosive) materials are stowed which do not need to be energized during the voyage must be isolated from the supply so that no part of the circuit within the compartment is energized. The method of isolation may be by withdrawal of fuses, opening of switches or circuit breakers, or disconnection from bus bars. The means, or access to the means, of disconnection/reconnection must be secured by a locked padlock under the control of a responsible person.

(b) Electrical equipment and cables in a cargo space in which Class 1 (explosive) materials are stowed which are energized during the voyage for the safe operation of the ship must meet the requirements of subchapter J of 46 CFR chapter I. Before Class 1 (explosive) materials are loaded aboard a vessel, all cables must be tested by a skilled person to ensure that they are safe and to determine satisfactory grounding, insulation resistance, and continuity of the cable cores, metal sheathing or armoring.

(c) All Class 1 (explosive) materials must be stowed in a safe position relative to electrical equipment and cables. Additional physical protection must be provided where necessary to minimize possible damage to the electrical equipment or cables, especially during loading and unloading.

(d) Cable joints in the compartments must be enclosed in metal-clad junction boxes.

(e) All lighting equipment and cables must be of the fixed type, and must meet the relevant inspection, test, and installation standards of 46 CFR chapter I, subchapter J.

[Amdt. 176–30, 55 FR 52696, Dec. 21, 1990, as amended by Amdt. 176–34, 58 FR 51533, Oct. 1, 1993]

§ 176.120 Lightning protection.

A lightning conductor grounded to the sea must be provided on any mast or similar structure on a vessel on which Class 1 (explosive) materials are stowed unless effective electrical bonding is provided between the sea and the mast or structure from its extremity and throughout to the main body of the hull structure. (Steel masts in ships of all welded construction comply with this requirement).

§ 176.122 Stowage arrangements under deck.

When stowed under deck, Class 1 (explosive) materials must be in conformance with one of the stowage arrangements described in §§ 176.124 through 176.136 of this subpart.

§ 176.124 Ordinary stowage.

(a) Ordinary stowage is authorized for most explosive articles carried by vessel. The exceptions are those for which this subpart prescribes ''magazine'' or ''special'' stowage.

(b) Class 1 (explosive) materials requiring ordinary stowage must be

stowed in accordance with §176.116 of this subpart.

§176.128 Magazine stowage, general.

(a) Magazine stowage is sub-divided into three different types of magazines designated by the letters A, B, and C. A magazine may be a fixed structure in the vessel, a closed freight container, or a portable magazine unit. Freight containers, portable magazines, and vehicles must be properly secured in position. Magazines may be positioned in any part of the vessel conforming to the general stowage conditions for Class 1 (explosive) materials, except magazines which are fixed structures must be constructed in a location in which their doors, where fitted, are easily accessible.

(b) Magazine stowage is required for all explosive substances, except ''Explosive Substances, n.o.s.'' in compatibility groups G, L, or S. Magazine stowage type A is required for those substances which must be kept clear of steelwork. All other explosive substances must be given magazine stowage type B, except those in compatibility group A for which magazine stowage type C is prescribed.

(c) Magazine stowage type B is required for Charges, propelling, for cannon. UN 0279, UN 0414, and UN 0242, and Charges, supplemental, explosive, UN 0600, in compatibility group C or D; and magazine stowage type C is required for detonators and similar articles in divisions and compatibility group 1.1B and 1.2B (Class A and B explosive).

§176.130 Magazine stowage Type A.

(a) In addition to protecting the Class 1 (explosive) materials and preventing unauthorized access, magazine stowage type A guards against friction between any spilled contents of packages and the vessel's sides and bulkheads.

(b) Class 1 (explosive) materials requiring magazine stowage type A must be stowed in a magazine which is tightly sheathed with wood on its inner sides and floor.

(c) When utilized as part of the magazine structure, the vessel's sides and bulkheads must be clean, free from rust or scale, and protected by battening or sweatboards spaced not more than 150 mm (6 inches) apart. All stanchions and other unprotected structural members must be similarly clean and battened. The underside of the deck above the magazine must be clean and free of rust and scale, but need not be battened.

(d) The top of the stow within the magazine must be at least 30 cm (12 inches) from the underside of the deck above.

(e) A type A magazine constructed in the square of a cargo space may not be loaded from the top.

(f) When other Class 1 (explosive) materials are stowed with Class 1 (explosive) materials for which magazine stowage type A is required, they or their packagings may have no exposed external parts made of ferrous metal or aluminum alloy.

§176.132 Magazine stowage Type B.

(a) Magazine stowage type B is the same as magazine stowage type A as prescribed in §176.130 of this part, except:

(1) The floor need not be tightly sheathed with wood but must be sparred or protected by wooden pallets or dunnage; and

(2) Battening of the vessel's sides, bulkheads, and stanchions is not required.

(b) A compartment may be used for magazine stowage type B without a magazine structure provided that:

(1) The Class 1 (explosive) materials are stowed on wooden gratings, pallets, or dunnage, directly on the deck and not on other cargo;

(2) Other cargo stowed in the same compartment is not readily combustible material; and

(3) The position of the stowage is such that there is direct access to the hatchway.

(c) Class 1 (explosive) materials and other cargo in the same compartment must be secured to eliminate the possibility of significant movement. Where an entire deck is used as a magazine, the stowage must be so arranged that the Class 1 (explosive) materials stowed therein will be removed from the ship before working any cargo in

any decks above or below the space in the same hatch.

[Amdt. 176–30, 55 FR 52696, Dec. 21, 1990, as amended at 56 FR 66282, Dec. 20, 1991]

§ 176.133 Magazine stowage Type C.

The construction requirements for magazine stowage type C are the same as for magazine stowage Type B as prescribed in § 176.132 of this part, except that the magazine must be located as near as practicable to the centerline of the vessel and must not be closer to the vessel's side than a distance equal to one-eighth of the vessel's beam or 2.5 m (8.2 feet). whichever is less.

§ 176.134 Vehicles.

Closed vehicles may be used to transport Class 1 (explosive) materials requiring magazine stowage when carried by vessel if they meet the requirements of the appropriate magazine stowage type. See § 176.168 of this subpart for additional requirements relating to the transport of Class 1 (explosive) materials in vehicles.

§ 176.136 Special stowage.

(a) Special stowage is required for certain articles presenting both explosive and chemical hazards, such as smoke or lachrymatory (compatibility group G or H), toxic (compatibility group K), or substances and articles which present a special risk (compatibility group L). Except as permitted in paragraph (c) of this section, Class 1 (explosive) materials requiring special stowage must be stowed on deck unless such stowage is impracticable and the COTP authorizes special stowage below deck.

(b) Class 1 (explosive) materials for which special stowage is required must be stowed as far away as practicable from living, accommodation, and working areas, and may not be overstowed. Steel portable magazines and freight containers in which such Class 1 (explosive) materials are stowed may not be located closer to the vessel's side than a distance equal to one-eighth of the vessel's beam or 2.5 m (8.2 feet), whichever is less.

(c) Explosive articles having UN number, UN 0015, UN 0016, UN 0018, UN 0019, UN 0301, or UN 0303 may be given ordinary stowage in a lower hold or 'tween deck. Other Class 1 (explosive) materials in compatibility groups G and H may be in open stowage out to the ship's side on a floodable lower hold or deep tank in such a position that other cargo cannot be contaminated by leakage; in all other cases such Class 1 (explosive) materials must be stowed in steel portable magazines or in freight containers. If a freight container is used for this purpose, the floor of the freight container must be leakproof; for example, an all-metal container may be used and a fillet of cement or other material worked across the bottom of the door opening.

(d) Class 1 (explosive) materials stowed in one compartment may not be of more than one compatibility group, except the COTP may allow Class 1 (explosive) materials of compatibility groups G and H in separate steel portable magazines to be stowed in the same compartment, not less than 3 m (10 feet) apart.

(e) Class 1 (explosive) materials in compatibility groups K and L must be stowed in a steel portable magazine regardless of the stowage position in the vessel.

[Amdt. 176–30, 55 FR 52696, Dec. 21, 1990, as amended at 56 FR 66282, Dec. 20, 1991; Amdt. 176–38, 60 FR 49111, Sept. 21, 1995]

§ 176.137 Portable magazine.

(a) Each portable magazine used for the stowage of Class 1 (explosive) materials on board vessels must meet the following requirements:

(1) It must be weather-tight, constructed of wood or metal lined with wood at least 2 cm (0.787 inch) thick, and with a capacity of no more than 3.1 cubic m (110 cubic feet).

(2) All inner surfaces must be smooth and free of any protruding nails, screws or other projections.

(3) If constructed of wood, a portable magazine must be framed of nominal 5 cm X 10 cm (2 X 4 inch) lumber, and sheathed with nominal 20 mm (0.787 inch) thick boards or plywood.

(4) When constructed of metal, the metal must be not less than 3.2 mm (0.126 inch) thick.

(5) Runners, bearers, or skids must be provided to elevate the magazine at least 10 cm (3.9 inches) from the deck.

Padeyes, ring bolts, or other suitable means must be provided for securing.

(6) If the portable magazine has a door or hinged cover, the door or cover must have a strong hasp and padlock or equally effective means of securing.

(7) The portable magazine must be marked on its top and four sides, in letters at least 8 cm (3 inches) high, as follows:

EXPLOSIVES—HANDLE CAREFULLY—KEEP LIGHTS AND FIRE AWAY.

(b) A portable magazine which meets the requirements for a type 2 or type 3 magazine under 27 CFR part 55 subpart K may be used for the stowage of Class 1 (explosive) materials on board vessels.

(c) A portable magazine with a capacity exceeding 3.1 m^3, (110 cubic feet) may be used for the stowage of Class 1 (explosive) materials under such construction, handling, and stowage requirements as the COTP approves.

§176.138 Deck stowage.

(a) Class 1 (explosive) materials stowed on deck must be carried as close to the vessel's centerline as practicable.

(b) Class 1 (explosive) materials may not be stowed within a horizontal distance of 6 m (20 feet) from any fire, machinery exhaust, galley uptake, locker used for combustible stores, or other potential sources of ignition. They must be clear of walkways and cargo working areas, fire hydrants, steam pipes, and means of access; away from all other facilities necessary for the safe working of the vessel, and not less than a horizontal distance of 8 m (26 feet) from the bridge, accommodation areas, and lifesaving appliances.

(c) Where vessels are fitted with container fastening arrangements, freight containers containing Class 1 (explosive) materials may be overstowed by containers of compatible Class 1 (explosive) materials or non-hazardous cargo. Where vessels are not fitted with container fastening arrangements, freight containers loaded with Class 1 (explosive) materials may be stowed only on the bottom tier of the stowage.

SEGREGATION

§176.140 Segregation from other classes of hazardous materials.

(a) Class 1 (explosive) materials must be segregated from other packaged hazardous materials in accordance with §176.83.

(b) Class 1 (explosive) materials must be segregated from bulk solid dangerous cargoes in accordance with the General Introduction to the IMDG Code. Notwithstanding §176.83(b), ammonium nitrate and sodium nitrate may be stowed together with blasting explosives, except those containing chlorates, provided the mixed stowage is treated as blasting explosives (see §176.410(e)).

§176.142 Hazardous materials of extreme flammability.

(a) Except as allowed by paragraph (b) of this section, certain hazardous materials of extreme flammability may not be transported in a vessel carrying Class 1 (explosive) materials. This prohibition applies to the following hazardous materials:

Carbon disulfide	UN 1131	Class 3.
Diethyl zinc	UN 1366	Division 4.2.
Dimethyl zinc	UN 1370	Division 4.2.
Magnesium alkyls	UN 3053	Division 4.2.
Nickel carbonyl	UN 1259	Division 6.1.
Pyrophoric liquids, n.o.s.	UN 2845	Division 4.2.

(b) The hazardous materials listed in paragraph (a) of this section may be transported in a vessel carrying the following Class 1 (explosive) materials as cargo:

(1) Division 1.4 (Class C explosive) materials, compatibility group S.

(2) Explosive articles having the following proper shipping names and identification numbers (see Column (4) of the §172.101 Table) if designed for lifesaving purposes and their total net explosive mass (weight) does not exceed 50 kg (110 lbs) per vessel:

(i) ARTICLES, PYROTECHNIC: UN Nos. 0428, 0429, 0430, 0431.

(ii) CARTRIDGES, FLASH: UN Nos. 0049, 0050.

(iii) CARTRIDGES, SIGNAL: UN Nos. 0054, 0312.

(iv) SIGNAL DEVICES, HAND: UN No. 0191.

(v) SIGNALS, DISTRESS: UN Nos. 0194, 0195.

(vi) SIGNALS, SMOKE: UN Nos. 0196, 0197, 0313.

(3) Class 1 (explosive) materials in compatibility groups C, D, and E if the total net explosive mass (weight) does not exceed 10 kg (22 pounds) per vessel.

(4) Explosive articles in compatibility group G, except fireworks and Class 1 (explosive) materials requiring special stowage if the total net explosive mass (weight) does not exceed 10 kg (22 pounds) per vessel.

(c) When a vessel carrying Class 1 (explosive) materials allowed under paragraph (b) of this section also carries a hazardous material of extreme flammability, that hazardous material must be stowed in a part of the vessel as remote as practicable from the Class 1 (explosive) materials.

§ 176.144 Segregation of Class 1 (explosive) materials.

(a) Except as provided in § 176.145 of this subpart, Class 1 (explosive) materials may be stowed within the same compartment, magazine, portable magazine, or transport unit as indicated in Table 176.144(a).

TABLE 176.144(a)—AUTHORIZED MIXED STOWAGE FOR EXPLOSIVES

[An ''X'' indicates that explosives in the two different compatibility groups reflected by the location of the ''X'' may not be stowed in the same compartment, portable magazine, or transport unit]

Compatibility groups	A	B	C	D	E	F	G	H	J	K	L	N	S
A		X	X	X	X	X	X	X	X	X	X	X	X
B	X		X	X	X	X	X	X	X	X	X	X	
C	X	X				X	1	X	X	X	X		
D	X	X				X	1	X	X	X	X		
E	X	X				X	1	X	X	X	X		
F	X	X	X	X	X		X	X	X	X	X	X	
G	X	X	1	1	1	X		X	X	X	X	X	
H	X	X	X	X	X	X	X		X	X	X	X	
J	X	X	X	X	X	X	X	X		X	X	X	
K	X	X	X	X	X	X	X	X	X		X	X	
L	X	X	X	X	X	X	X	X	X	X	2	X	X
N	X	X				X	X	X	X	X	X		
S	X										X		

NOTES: 1. Explosive articles in compatibility group G, other than fireworks and those requiring special stowage, may be stowed with articles of compatibility groups C, D, and E, provided no explosive substances are carried in the same compartment, portable magazine or transport unit.

2. Explosives in compatibility group L may only be stowed in the same compartment, magazine or transport unit with identical explosives within compatibility group L.

(b) Where Class 1 (explosive) materials of different compatibility groups are allowed to be stowed in the same compartment, magazine, portable magazine, or transport unit, the stowage arrangements must conform to the most stringent requirements for the entire load.

(c) Where a mixed load of Class 1 (explosive) materials of different hazard divisions and/or stowage arrangements is carried within a compartment, magazine, or transport unit, the entire load must be treated as belonging to the hazard division having the greatest hazard. (For example, if a load of Division 1.1 (Class A explosive) materials is mixed with Division 1.3 (Class B explosive) materials, the load is treated as a Division 1.1 (Class A explosive) material as defined in § 173.50(b) of this subchapter and the stowage must conform to the most stringent requirements for the entire load).

(d) If some of the Class 1 (explosive) materials in a stowage mixture require magazine stowage, Class 1 (explosive) materials requiring ordinary stowage may be stowed in the same magazine. When the magazine is used for substances requiring Type A stowage, the other Class 1 (explosive) materials stowed therein must have no exposed parts of any ferrous metal or aluminum alloy, unless separated by a partition.

(e) Segregation on deck: When Class 1 (explosive) materials in different compatibility groups are carried on deck, they must be stored not less than 6 m (20 feet) apart unless they are allowed under Table 176.144(a) to be stowed in

the same compartment, magazine, or transport unit.

(f) On a barge used to transfer class 1 (explosive) materials from a waterfront facility to a vessel at an explosives anchorage (or from the vessel to the water front facility), if compliance with paragraph (e) of this section is not practicable, a sandbag barrier at least 0.6 m (2 feet) in thickness may be substituted for the 6 m (20 feet) separation.

§ 176.145 Segregation in single hold vessels.

(a) On board a vessel having a single cargo hold, Class 1 (explosive) materials in hazard division/compatibility group 1.1B and 1.2B may be stowed in the same compartment with substances of compatibility group D, provided:

(1) The net explosive weight of the compatibility group B explosive does not exceed 50 kg (110 pounds); and

(2) The compatibility group B explosive materials are stowed in a steel portable magazine that is stowed at least 6 m (20 feet) from the compatibility group D substances.

(b) Division/compatibility group 1.4B (Class C explosive) materials may be stowed in the same compartment with substances of compatibility group D provided the Class 1 (explosive) materials of different compatibility groups are separated by either a distance of at least 6 m (20 feet) or by a steel partition.

§ 176.146 Segregation from non-hazardous materials.

(a) Except as required by paragraphs (b) and (c) of this section, Class 1 (explosive) materials need not be segregated from other cargo of a non-dangerous nature.

(b) Mail, baggage, and personal and household effects may not be stowed in the same compartment as, or in compartments immediately above or below, Class 1 (explosive) materials other than those in compatibility group S.

(c) Where Class 1 (explosive) materials are stowed against an intervening bulkhead, any mail on the other side of the bulkhead must be stowed away from it.

(d) In order to avoid contamination:

(1) An explosive substance or article which has a secondary POISON hazard label must be stowed ''separated from'' all foodstuffs, except when such materials are stowed in separate closed transport units, the requirements for ''away from'' segregation apply.

(2) An explosive substance or article which has a secondary CORROSIVE hazard label must be stowed ''away from'' foodstuffs.

[Amdt. 176–30, 55 FR 52696, Dec. 21, 1990, as amended at 56 FR 66282, Dec. 20, 1991]

PRECAUTIONS DURING LOADING AND UNLOADING

§ 176.148 Artificial lighting.

Electric lights, except arc lights, are the only form of artificial lighting permitted when loading and unloading Class 1 (explosive) materials.

§ 176.150 Radio and radar.

(a) Except as provided in paragraph (b) of this section, when Class 1 (explosive) materials (other than explosive articles in Division 1.4 [Class C explosive] or any explosive substance) are loaded, unloaded, or handled, the responsible person must ensure that all sources of electromagnetic radiation such as radio and radar transmitters are deenergized by opening the main switches controlling the sources and tagging them to warn that the devices are not to be energized until loading or unloading has ceased.

(b) During the loading or unloading of all explosive articles (except those in Division 1.4 [Class C explosive]), no radio or radar transmitter may be used within 50 m (164 feet) of such articles except for VHF transmitters the power output of which does not exceed 25 watts and of which no part of the antenna system is within 2 m (7 feet) of the Class 1 (explosive) materials.

(c) Explosive articles which are sensitive to electromagnetic radiation from external sources must be stowed at a safe distance from the vessel's radio cabin, receiving and transmitting apparatus radio antenna or lead-in, and radar installation, with due regard to the character of the vessel and the degree of screening-off of the explosive articles.

§ 176.154 Fueling (bunkering).

(a) Class 1 (explosive) materials, except those in compatibility group S, may not be loaded or unloaded when fueling (bunkering) is in progress except with the prior authorization of the COTP, and under conditions prescribed by that officer.

(b) Vessels containing Class 1 (explosive) materials may not be fueled (bunkered) with the hatches open unless authorized by the COTP.

§ 176.156 Defective packages.

(a) No leaking, broken, or otherwise defective package containing Class 1 (explosive) materials, including packages which have been adversely affected by moisture, may be accepted for shipment. The master or person in charge of a vessel on which there is a defective package containing Class 1 (explosive) materials must seek advice from the shipper concerning withdrawal, repair, or replacement. No repair of damaged or defective package containing Class 1 (explosive) materials may be performed on board a vessel.

(b) No Class 1 (explosive) material, which for any reason has deteriorated or undergone a change of condition that increases the hazard attendant upon its conveyance or handling, may be moved in the port area, except as directed by the COTP.

(c) If any package of Class 1 (explosive) materials, or seal of a package of Class 1 (explosive) materials, appears to be damaged, that package must be set aside for examination and repair or otherwise legally disposed of as directed by the shipper.

(d) If any Class 1 (explosive) materials are spilled or released from a package, the responsible person must ensure that an appropriate emergency response is undertaken in accordance with the emergency response information required under § 172.602 of this subchapter. The master of the vessel must report each incident involving spillage or release of Class 1 (explosive) materials to the COTP as soon as practicable.

[Amdt. 176–30, 55 FR 52696, Dec. 21, 1990, as amended at 56 FR 66282, Dec. 20, 1991]

§ 176.160 Protection against weather.

Any person loading or unloading packages containing Class 1 (explosive) materials shall take adequate measures to prevent these packages from becoming wet.

§ 176.162 Security.

A responsible person must be present at all times when the hatches of spaces containing Class 1 (explosive) materials are open. No unauthorized person may be permitted to access spaces in which Class 1 (explosive) materials are stowed. Magazines must be secured against unauthorized entry when loading has been completed, or when loading or unloading is stopped. Packages containing Class 1 (explosive) materials may not be opened on board ship.

§ 176.164 Fire precautions and firefighting.

(a) Matches, lighters, fire, and other ignition sources are prohibited on and near any vessel on which Class 1 (explosive) materials are being loaded, unloaded, or handled except in places designated by the master or the COTP.

(b) A fire hose of sufficient length to reach every part of the loading area with an effective stream of water must be laid and connected to the water main, ready for immediate use.

(c) No repair work may be carried out in a cargo space containing Class 1 (explosive) materials other than those of Division 1.4 (Class C explosive). No welding, burning, cutting, or riveting operations involving the use of fire, flame, spark, or arc-producing equipment may be conducted on board except in an emergency; and, if in port, with the consent of the COTP.

(d) Each compartment, including a closed vehicle deck space, which contains Class 1 (explosive) materials must be provided with a fixed fire extinguishing system. Each adjacent cargo compartment either must be protected by a fixed fire extinguishing installation or must be accessible for firefighting operations.

(e) A vessel must have two sets of breathing apparatus and a power-operated fire pump, which, together with its source of power and sea connections, must be located outside the machinery space.

PASSENGER VESSELS

§ 176.166 Transport of Class 1 (explosive) materials on passenger vessels.

(a) Only the following Class 1 (explosive) materials may be transported as cargo on passenger vessels:

(1) Division 1.4 (Class C explosive) materials, compatibility group S.

(2) Explosive articles designed for lifesaving purposes as identified in § 176.143(b)(2), if the total net explosive mass (weight) does not exceed 50 kg (110 pounds).

(3) Class 1 (explosive) materials in compatibility groups C, D, and E, if the total net explosive mass (weight) does not exceed 10 kg (22 pounds) per vessel.

(4) Articles in compatibility group G other than those requiring special stowage, if the total net explosive mass (weight) does not exceed 10 kg (22 pounds) per vessel.

(5) Articles in compatibility group B, if the total net explosive mass (weight) does not exceed 5 kg (11 pounds).

(b) Class 1 (explosive) materials which may be carried on passenger vessels are identified in Column (10) of the § 172.101 Table. They must be stowed in accordance with Table 176.166(b).

TABLE 176.166(b).—STOWAGE ARRANGEMENTS IN PASSENGER VESSELS

Class/Division	Samples, explosive	Goods, N.O.S. Class 1	Goods shipped under a specific proper shipping name												
			Compatibility group												
			A	B	C	D	E	F	G	H	J	K	L	N	S
1.1	d	d	c	e	e	e	e	c	e	—	c	—	c	—	—
1.2	d	d	—	e	e	e	e	c	e	c	c	c	c	—	—
1.3	d	d	—	—	e	e	—	c	e	c	c	c	c	—	—
1.4	d	d	—	b	b	b	b	c	b	—	—	—	—	—	a
1.5	d	d	—	—	—	e	—	—	—	—	—	—	—	—	—
1.6	d	d	—	—	—	—	—	—	—	—	—	—	—	e	—

a—As for cargo ships, on deck or under deck.
b—As for cargo ships, on deck or under deck, in portable magazines only.
c—Prohibited.
d—As specified by the Associate Administrator for Hazardous Materials Safety, or the competent authority of the country in which the Class 1 (explosive) materials are loaded on the vessel.
e—In containers or the like, on deck only.

(c) Notwithstanding the provisions of paragraph (a) of this section, a combination of the substances and articles listed in paragraphs (a)(1) through (a)(5) of this section may be transported on the same passenger vessel provided the total net explosive mass (weight) of the combination of Class 1 (explosive) materials carried does not exceed the smallest quantity specified for any one of the substances or articles in the combination.

TRANSPORT UNITS AND SHIPBORNE BARGES

§ 176.168 Transport of Class 1 (explosive) materials in vehicle spaces.

(a) All transport vehicles and cargo must be properly secured.

(b) All transport vehicles used for the carriage of Class 1 (explosive) materials must be structurally serviceable as defined in § 176.172(a)(2).

(c) Vehicles used to transport Class 1 (explosive) materials must conform to the requirements in §§ 177.834 and 177.835 of this subchapter.

(d) Class 1 (explosive) materials which require special stowage must be transported in transport vehicles approved for the purpose by the Associate Administrator for Hazardous Materials Safety except that Class 1 (explosive) materials in compatibility group G or H may be carried in steel portable magazines or freight containers. Closed transport vehicles may be used as magazines; transport vehicles of other types may be used to transport Class 1 (explosive) materials which require ordinary stowage.

(e) Class 1 (explosive) materials of different compatibility groups may not be stowed in the same vehicle except as allowed in § 176.144 of this subpart.

(f) Vehicles containing different Class 1 (explosive) materials require no

segregation from each other, except that these materials may be carried together under the provisions of § 176.144 of this subchapter. In all other instances, the vehicles must be ''separated from'' one another.

(g) All transport vehicles used for the transport of Class 1 (explosive) materials must have lashing arrangements for securing the vehicle on the ship and preventing the movement of the vehicle on its springs during the sea passage.

(h) Where a portable magazine or closed freight container is carried on a chassis, twist locks or other suitable securing arrangements must be provided and made secure.

§ 176.170 Transport of Class 1 (explosive) materials in freight containers.

(a) When Class 1 (explosive) materials are stowed in a freight container, the freight container, for the purposes of this subpart, may be regarded as a magazine but not as a separate compartment.

(b) Freight containers exceeding 6 m (20 feet) in length may not carry more than 5000 kg (11,023 pounds) net explosive weight of explosive substances, except explosive substances in Division 1.4.

(c) Freight containers used to transport Class 1 (explosive) materials for which magazine stowage type A is required must have a floor consisting of tightly fitted wooden boards, plywood or equivalent non-metallic material, and a non-metallic lining.

(d) Class 1 (explosive) materials of different compatibility groups may not be stowed within the same freight container except as allowed in § 176.144 of this subpart.

(e) On vessels, other than specially fitted container ships, freight containers containing Class 1 (explosive) materials must be stowed only in the lowest tier.

(f) Freight containers carrying different Class 1 (explosive) materials require no segregation from each other, if the provisions of § 176.144 of this subpart allow the Class 1 (explosive) materials to be carried together in the same compartment. In all other instances, the containers must be ''separated from'' one another in accordance with § 176.83(f) of this part.

(g) Freight containers carrying Class 1 (explosive) materials may not be handled on board a vessel with fork lift trucks unless approved by the COTP. This does not preclude the use of front-loading trucks using side-frame lifting equipment.

[Amdt. 176–30, 55 FR 52696, Dec. 21, 1990, as amended at 56 FR 66282, Dec. 20, 1991]

§ 176.172 Structural serviceability of freight containers and vehicles carrying Class 1 (explosive) materials on ships.

(a) A freight container may not be offered for the carriage of Class 1 (explosive) materials unless the container is structurally serviceable as evidenced by a current CSC (International Convention for Safe Containers) approval plate and verified by a detailed visual examination as follows:

(1) Before a freight container or transport vehicle is packed with Class 1 (explosive) materials, it must be visually examined by the shipper to ensure it is structurally serviceable, free of any residue of previous cargo, and its interior walls and floors are free from protrusions.

(2) *Structurally serviceable* means the freight container or the vehicle cannot have major defects in its structural components, such as top and bottom side rails, top and bottom end rails, door sill and header, floor cross members, corner posts, and corner fittings in a freight container. Major defects include—

(i) Dents or bends in the structural members greater than 19 mm (0.75 inch) in depth, regardless of length;

(ii) Cracks or breaks in structural members;

(iii) More than one splice or an improper splice (such as a lapped splice) in top or bottom end rails or door headers;

(iv) More than two splices in any one top or bottom side rail;

(v) Any splice in a door sill or corner post;

(vi) Door hinges and hardware that are seized, twisted, broken, missing, or otherwise inoperative;

(vii) Gaskets and seals that do not seal; or

(viii) For freight containers, any distortion of the overall configuration great enough to prevent proper alignment of handling equipment, mounting and securing chassis or vehicle, or insertion into ships' cells.

(3) In addition, deterioration of any component of the freight container or vehicle, regardless of the material of construction, such as rusted-out metal in sidewalls or disintegrated fiberglass, is prohibited. Normal wear, however, including oxidation (rust), slight dents and scratches, and other damage that does not affect serviceability or the weather-tight integrity of the units, is not prohibited.

(b) As used in paragraph (a) of this section, *splice* means any repair of a freight container main structural member which replaces material, except complete replacement of the member.

(c) All shipments of Class 1 (explosive) materials except those in Division 1.4 (Class C explosive) must be accompanied by a statement, which may appear on the shipping paper, certifying that the freight container or the vehicle is structurally serviceable as defined in paragraph (a)(2) of this section.

§176.174 Transport of Class 1 (explosive) materials in shipborne barges.

(a) Fixed magazines may be built within a shipboard barge. Portable magazines and freight containers may be used as magazines with a barge.

(b) Shipborne barges may be used for the carriage of all types of Class 1 (explosive) materials. When carrying Class 1 (explosive) materials requiring special stowage, the following requirements apply:

(1) Class 1 (explosive) materials in compatibility group G or H must be stowed in steel portable magazines or freight containers.

(2) Class 1 (explosive) materials in compatibility group K or L must be stowed in steel portable magazines.

(c) Class 1 (explosive) materials of different compatibility groups may not be stowed within the same shipborne barge unless under §176.144(b) of this subpart they are authorized to be stowed in the same compartment.

HANDLING CLASS 1 (EXPLOSIVE) MATERIALS IN PORT

§176.176 Signals.

When Class 1 (explosive) materials are being loaded, handled, or unloaded on a vessel, the vessel must exhibit the following signals:

(a) By day, flag ''B'' (Bravo) of the international code of signals; and

(b) By night, an all-round fixed red light.

§176.178 Mooring lines.

(a) All lines used in mooring the vessel must be of sufficient strength, type, and number for the size of the vessel and local conditions.

(b) While the vessel is moored or anchored in a port area, towing wires of adequate size and length must be properly secured to mooring bits at the bow and stern ready for immediate use with the towing eyes passed outboard and kept at about water level.

(c) The mooring arrangements must be such that the vessel can be released quickly in an emergency.

§176.180 Watchkeeping.

Whenever Class 1 (explosive) materials are on board a vessel in port, there must be sufficient crew on board to maintain a proper watch and to operate the propulsion and firefighting equipment in case of an emergency.

§176.182 Conditions for handling on board ship.

(a) *Weather conditions.* Class 1 (explosive) materials may not be handled in weather conditions which may seriously increase the hazards presented by the Class 1 (explosive) materials. During electrical storms, cargo operations must be halted and all hatches containing Class 1 (explosive) materials must be closed.

(b) *Darkness.* Class 1 (explosive) materials may not be handled on board a vessel during the hours of darkness unless prior consent has been obtained from the COTP.

(c) *Lighting.* The area where Class 1 (explosive) materials are handled, or where preparations are being made to handle Class 1 (explosive) materials, must be illuminated with lighting that

is sufficient to safely perform the handling operation.

(d) *Protective equipment.* (1) A sufficient quantity of appropriate protective equipment must be provided for the personnel involved in handling Class 1 (explosive) materials.

(2) The protective equipment must provide adequate protection against the hazards specific to the Class 1 (explosive) materials handled.

(e) *Intoxicated persons.* No person under the influence of alcohol or drugs to such an extent that the person's judgment or behavior is impaired may participate in any operation involving the handling of Class 1 (explosive) materials. The master of the vessel must keep any such person clear of any areas where Class 1 (explosive) materials are being handled.

(f) *Smoking.* (1) Smoking is prohibited on the vessel while Class 1 (explosive) materials are being handled or stowed except in places designated by the master of the vessel.

(2) Conspicuous notices prohibiting smoking must be posted and clearly visible at all locations where Class 1 (explosive) materials are handled or stored.

(g) All hatches and cargo ports opening into a compartment in which Class 1 (explosive) materials are stowed must be kept closed except during loading and unloading of the compartment. After loading, hatches must be securely closed.

§ 176.184 Class 1 (explosive) materials of Compatibility Group L.

Class 1 (explosive) materials in compatibility group L may not be handled in a port area without the special permission of, and subject to any special precautions required by, the COTP.

§ 176.190 Departure of vessel.

When loading of Class 1 (explosive) materials is completed, the vessel must depart from the port area as soon as is reasonably practicable.

§ 176.192 Cargo handling equipment for freight containers carrying Class 1 (explosive) materials.

(a) Except in an emergency, only cargo handling equipment that has been specifically designed or modified for the handling of freight containers may be used to load, unload, or handle freight containers containing Division 1.1 or 1.2 (Class A and B explosive) materials.

(b) The gross weight of a freight container containing Class 1 (explosive) materials may not exceed the safe working load of the cargo handling equipment by which it is handled.

MAGAZINE VESSELS

§ 176.194 Stowage of Class 1 (explosive) materials on magazine vessels.

(a) *General.* The requirements of this section are applicable to magazine vessels and are in addition to any other requirements in this subchapter.

(b) *Type vessel authorized.* A single deck vessel with or without a house on deck is the only type vessel that may be used as a magazine vessel. A magazine vessel may not be moved while Class 1 (explosive) materials are on board.

(c) *Location of explosives.* Division 1.1, 1.2, or 1.3 (Class A and B explosive) materials, in excess of 2268 kg (5000 pounds), stored in any magazine vessel must be stowed below deck. No Class 1 (explosive) materials may be stowed on deck unless the vessel is fitted with a deck house having a stowage area which meets the requirements in this subpart for the stowage of Class 1 (explosive) materials. Detonators, detonator assemblies and boosters with detonators, Division 1.1 (Class A explosive) may not be stored on the same magazine vessel with other Division 1.1, 1.2. and 1.3 (Class A or B explosive) materials.

(d) *Class 1 (explosive) materials storage spaces.* Any compartment on a magazine vessel used for the stowage of Class 1 (explosive) materials must be completely sealed with wood so as to provide a smooth interior surface. Each metal stanchion in the compartment must be boxed in the same manner. An overhead ceiling is not required when the overdeck is weather tight. All nail and bolt heads must be countersunk and any exposed metal must be covered with wood.

(e) *Initiating explosives, detonators and boosters with detonators.* No explosive substance in Division 1.1, compatibility

group A may be stowed in the same compartment with any other Class 1 (explosive) materials when there are explosive substances in Division 1.1 or 1.2 (Class A explosive) on the same magazine vessel. Detonators, detonator assemblies and boosters with detonators must be stowed at least 8 m (26 feet) from any bulkhead forming a boundary of a compartment containing any other Class 1 (explosive) materials.

(f) *Dry storage spaces.* A magazine vessel having a dry storage space capable of being used for any purpose whatsoever must have a cofferdam at least 61 cm (24 inches) wide fitted between the dry storage space and each adjacent compartment containing Class 1 (explosive) materials. The cofferdam must be constructed of wood or steel, formed by two tight athwartship bulkheads extending from the skin of the vessel to the overdeck. If the cofferdam extends to the weather deck. a watertight hatch must be fitted in the deck to provide access to the cofferdam.

(g) *Lighting.* Non-sparking, battery-powered, self-contained electric lanterns or non-sparking hand flashlights are the only means of artificial light authorized.

(h) *Living quarters.* Living quarters must be fitted on the inside with a non-combustible material approved by the Commandant, USCG. Bracketed ship's lamps are the only lighting fixtures authorized to be used in the living quarters. Any stove used for heating or cooking must be securely fastened and may not be mounted closer than 15 cm (5.9 inches) to the deck or sides of the house. Any smoke pipe for the stove which passes through the roof of the house must be kept at least 8 cm (3 inches) away from any woodwork. Each smoke pipe must be protected by a layer of non-combustible material approved by the Commandant, USCG, an air space of at least 2.54 cm (1 inch), and a metal collar of at least 1.5 mm (0.059 inch) sheet secured only on the weather side of the roof. There may be no opening from any living quarters into any stowage compartment.

(i) *Storage of other hazardous materials.* Magazine vessels having Class 1 (explosive) materials on board may not be used for the storage of any other hazardous material.

(j) *Magazine vessel's stores.* Hazardous materials used as stores on board any magazine vessel must comply with the requirements of 46 CFR part 147.

(k) *Matches.* Safety matches requiring a prepared surface for ignition are the only type of matches authorized to be possessed or used on board a magazine vessel. They must be kept in a metal box or can with a metal cover and stored in the custodian's living quarters.

(l) *Firearms.* Firearms and ammunition (other than cargo) are not permitted on board a magazine vessel.

(m) *Fire extinguishing equipment.* No Class 1 (explosive) materials may be loaded or stowed in, unloaded from, or handled on any magazine vessel unless four fire extinguishers that meet the requirements for Type A Size II or Type B Size III in 46 CFR part 95, subpart 95.50 are near and accessible to the magazines.

(n) *Supervision.* A magazine vessel containing Class 1 (explosive) materials must be continuously attended by a custodian employed for that purpose by the vessel's owner.

(o) *Unauthorized persons on magazine vessels.* The custodian of a magazine vessel shall prevent unauthorized persons from coming on board unless it is necessary to abate a hazard to human life or a substantial hazard to property.

(p) *Repacking of Class 1 (explosive) materials on board.* No Class 1 (explosive) materials may be repacked on board a magazine vessel. Broken or damaged packages must be handled in accordance with the requirements of § 176.156. Packages requiring an emergency response must be handled in accordance with the emergency response information required under § 172.602 of this subchapter.

(q) *Work boat.* Each magazine vessel must be equipped with a work boat.

(r) *Life preservers.* One approved personal flotation device must be available for each person employed on a magazine vessel.

(s) *Fenders.* Each magazine vessel must be fitted with fenders in sufficient number and size to prevent any

vessel tieing up alongside from coming in contact with the hull.

[Amdt. 176–30, 55 FR 52696, Dec. 21, 1990, as amended by Amdt. 176–41, 61 FR 51339, Oct. 1, 1996]

Subpart H—Detailed Requirements for Class 2 (Compressed Gas) Materials

SOURCE: Amdt. 176–30, 55 FR 52704, Dec. 21, 1990, unless otherwise noted.

§ 176.200 General stowage requirements.

(a) Each package of Class 2 (compressed gas) material being transported by vessel must be prevented from making direct contact with the vessel's deck, side, or bulwark by dunnage, shoring, or other effective means.

(b) When cylinders of Class 2 (compressed gas) materials being transported by vessel are stowed in a horizontal position, each tier must be stowed in the cantlines of the tier below it, and the valves on cylinders in adjacent tiers must be at alternate ends of the stow. Each tier may be stepped back and the ends alternated in order to clear the flange. Lashing must be provided to prevent any movement.

(c) When cylinders of Class 2 (compressed gas) materials being transported by vessel are stowed in a vertical position they must be stowed upright in a block and cribbed or boxed in with suitable dunnage. The box or crib must be dunnaged at least 10 cm (3.9 inches) off any metal deck. The cylinders in the box or crib must be braced to prevent any movement. The box or crib must be securely chocked and lashed to prevent any movement.

(d) Any package containing Division 2.3 (poison gas) materials must be stowed separate from all foodstuffs.

(e) Class 2 (compressed gas) materials may not be stowed ''on deck'' over a hold or compartment containing coal.

(f) Class 2 (compressed gas) material must be kept as cool as practicable and be stowed away from all sources of heat and ignition.

§ 176.205 Under deck stowage requirements.

(a) When a Class 2 (compressed gas) material is stowed below deck, it must be stowed in a mechanically ventilated cargo space with no source of artificial heat and clear of living quarters. No bulkhead or deck of that hold or compartment may be a common boundary with any boiler room, engine room, coal bunker, galley or boiler room uptake.

(b) When Division 2.1 (flammable gas) materials are stowed below deck, they must be stowed in a hold or compartment which complies with paragraph (a) of this section and the following requirements:

(1) Each hold or compartment must be ventilated.

(2) Each hold or compartment must be equipped with an overhead water sprinkler system or fixed fire extinguishing system.

(3) Each electrical power line in the hold or compartment must be protected by a strong metal covering to prevent crushing by cargo being stowed against it.

(4) Except when fitted with electrical fixtures of the explosion-proof type, each electrical circuit serving the hold or compartment must be disconnected from all sources of power. No circuit may be energized until the Division 2.1 (flammable gas) cargo and any vapors have been removed from the hold or compartment. Explosion-proof portable lighting may be used if the source of power is from electrical outlets outside the hold or compartment and above the weather deck.

(5) Any opening in a common bulkhead of an adjacent hold or compartment must be securely closed off and made gas-tight, unless the adjacent hold or compartment is also used for the stowage of Division 2.1 (flammable gas) materials.

(6) Full and efficient hatch covers must be used. Tarpaulins, if fitted, must be protected by dunnaging before overstowing with any cargo. Each tarpaulin must be in one piece and free of rents, tears, and holes.

(7) A fire screen must be fitted at the weather end of each vent duct leading from the hold or compartment. The fire screen must completely cover the open

area. It must consist of two layers of corrosion-resistant metal wire of 20 x 20 mesh or finer, spaced not less than 1 cm (0.4 inch) or more than 4 cm (1.6 inches) apart. The screen may be removable if means for securing it in place when in service are provided.

(8) The hold or compartment may not be fitted with any gooseneck type vent trunk head.

(9) Any electrical apparatus located in the hold or compartment must be capable of being disconnected from its power source by a positive means located outside the hold or compartment.

[Amdt. 176–30, 55 FR 52704, Dec. 21, 1990, as amended at 56 FR 66282, Dec. 20, 1991]

§176.210 On deck stowage requirements.

Cylinders of Class 2 (compressed gas) materials being transported by vessel must be protected from radiant heat which, including the direct rays of the sun by structural erections or awnings. A tarpaulin covering the cylinders is not acceptable if it comes in contact with them.

§176.220 Smoking or open flame and posting of warning signs.

(a) Smoking or the use of open flame is prohibited in any hold or compartment containing a Division 2.1 (flammable gas) material, near any Division 2.1 (flammable gas) material stowed on deck, or near any ventilator leading to a hold containing this material.

(b) A sign carrying the legend:

FLAMMABLE VAPORS
KEEP LIGHTS AND FIRE AWAY
NO SMOKING

must be conspicuously posted at each approach to an ''on deck'' Division 2.1 (flammable gas) material stowage area and near each cargo hold ventilator leading to a hold containing this material. The sign must be painted on a white background using red letters. The letters may not be less than 8 cm (3 inches) high.

§176.225 Stowage of chlorine.

Chlorine (UN 1017) must be stowed separate from copper or brass leaf sheets and from finely divided organic material.

§176.230 Stowage of Division 2.1 (flammable gas) materials.

Division 2.1 (flammable gas) materials transported in Specification 106A or 110A multi-unit car tanks must be stowed on deck only, and must be shaded from radiant heat.

Subpart I—Detailed Requirements for Class 3 (Flammable) and Combustible Liquid Materials

SOURCE: Amdt. 176–30, 55 FR 52705, Dec. 21, 1990, unless otherwise noted.

§176.305 General stowage requirements.

(a) A Class 3 (flammable) or combustible liquid must be kept as cool as reasonably practicable and be stowed away from all sources of heat and ignition.

(b) Except as otherwise provided in §176.76(g), a package containing a Class 3 (flammable) liquid and equipped with a vent or safety relief device must be stowed ''on deck'' only.

(c) The following requirements apply to each hold or compartment in which any Class 3 (flammable) or combustible liquids are being transported:

(1) The hold or compartment must be ventilated except that the stowage of non-bulk packages of Class 3 (flammable) liquids with a flash point above 23°C (73°F) (see 49 CFR 171.8 definitions) may be in non-ventilated holds.

(2) Stowage of a Class 3 (flammable) or combustible liquid within 6 m (20 feet) of a bulkhead which forms a boundary or deck of a boiler room, engine room, coal bunker, galley, or boiler room uptake is not permitted. If the amount of the liquid to be stowed in a hold will not permit compliance with the requirement for a 6 m (20 foot) separation, less separation distance is authorized if at least one of the following conditions exists:

(i) The bulkhead or deck is covered with at least 8 cm (3 inches) of insulation on the entire area subject to heat;

(ii) A temporary wooden bulkhead at least 5 cm (2 inches) thick is constructed in the hold at least 8 cm (3 inches) off an engine room or 15 cm (5.9

inches) off a boiler room bulkhead, covering the entire area of the bulkhead that is subject to heat, and the space between the permanent bulkhead and the temporary wooden bulkhead is filled with mineral wool or equivalent bulk noncombustible insulating material; or

(iii) A temporary wooden bulkhead is constructed of at least 2.5 cm (1 inch) thick tongue and groove sheathing, located 1 m (3 feet) from the boiler room or engine room bulkhead, and filled with sand to a height of 2 m (7 feet) above the tank top, or, if the cargo compartment is located between decks, 1 m (3 feet) of sand.

(3) Combustible liquids may not be stowed in a hold within 6 m (20 feet) of a common bulkhead with the engine room unless the means of vessel propulsion is internal combustion engines.

(4) Each cargo opening in a bulkhead of an adjacent hold must be securely closed off and made gas-tight, unless the adjacent hold is also used for the stowage of a Class 3 (flammable) or combustible liquid.

(d) In addition to the requirements specified in paragraph (b) of this section, the following requirements apply to each hold or compartment in which a Class 3 (flammable) liquid is transported:

(1) Full and effective hatch covers must be used. Tarpaulins, if fitted, must be protected by dunnaging before overstowing with any cargo. Each tarpaulin must be in one piece and free of rents, tears, and holes;

(2) If Class 3 (flammable) liquids in excess of 1016 kg (2240 pounds) are stowed under deck in any one hold or compartment, a fire screen must be fitted at the weather end of each vent duct leading from that hold or compartment. The fire screen must completely cover the open area. It must consist of two layers of corrosion-resistant metal wire of 20 x 20 mesh or finer, spaced not less than 1 cm (0.4 inch) or more than 4 cm (1.6 inches) apart. The screen may be removable only if means for securing it in place when in service are provided;

(3) Each electrical power line in the hold or compartment must be protected by a strong metal covering to prevent crushing by cargo being stowed against it;

(4) Except when fitted with explosion-proof type electrical fixtures, each electrical circuit serving the hold or compartment must be disconnected from all sources of power from a point outside the hold or compartment containing flammable liquids. No circuit may be energized until the flammable liquids and any vapors have been removed from the hold or compartment. Explosion-proof type portable lighting may be used if the source of power is from electrical outlets outside the hold or compartment and above the weather deck; and

(5) A Class 3 (flammable) liquid in excess of 1016 kg (2240 pounds) may not be transported in any hold or compartment that is fitted with a gooseneck type of vent head.

(e) On a passenger vessel, each hold or compartment used to transport a Class 3 (flammable) liquid must be equipped with an overhead water sprinkler system or fixed fire-extinguishing system.

(f) On a passenger vessel, each hold or compartment used to transport Class 3 (flammable) liquids under a passenger space must have an overdeck of an A–60 type construction (see 46 CFR 72.05–10(c)(1)) or equivalent or have its underside covered with at least 8 cm (3 inches) of noncombustible insulation.

(g) No Class 3 (flammable) liquid in a drum or wooden case, having inside packagings of more than 1 L (0.3 gallon) capacity each, may be stowed as a beam filler. A wooden barrel, a wooden box or a fiberboard box, with any Class 3 (flammable) liquid material in inside packagings of not more than 1 L (0.3 gallon) capacity each, may only be stowed as a beam filler if it is possible to stow and observe any ''THIS SIDE UP'' marking.

[Amdt. 176–30, 55 FR 52705, Dec. 21, 1990, as amended at 56 FR 66282, Dec. 20, 1991]

§ 176.315 Fire protection requirements.

(a) For each 79,500 liters (21,000 U.S. gallons) or part thereof of any Class 3 (flammable) or combustible liquid being transported on board a vessel in a portable tank, rail tank car, or a motor vehicle cargo tank, there must be provided at least one B–V

semiportable foam (152 liter/40 gallon capacity) (see 46 CFR 95.50), dry chemical (45.4 kg (100 pounds) minimum capacity) or equivalent fire extinguisher, or a fire hose fitted with an approved portable mechanical foam nozzle with pick-up tube and two 19 liter (5 gallon) cans of foam liquid concentrate. Each foam system must be suitable for use with each Class 3 (flammable) or combustible liquid for which it is required. Each fire extinguisher must be accessible to the tank it is intended to cover.

(b) The fire hose at each fire hydrant in the vicinity of Class 3 (flammable) and combustible liquids stowage areas must be fitted with an approved combination solid stream and water spray nozzle.

(c) The pressure must be maintained in the vessel's fire mains during the loading and unloading of any Class 3 (flammable) or combustible liquids.

(d) Two 7 kg (15-pound) capacity hand portable dry chemical or two portable 10 L (2.6 gallons) foam-type extinguishers must be accessible to any packaged Class 3 (flammable) or combustible liquid and suitable for use with the lading.

(e) The requirements of this section do not apply to portable tanks and their contents authorized under 46 CFR part 98 or 46 CFR part 64.

[Amdt. 176–30, 55 FR 52705, Dec. 21, 1990, as amended at 56 FR 66282, Dec. 20, 1991]

§ 176.320 Use of hand flashlights.

Each hand flashlight used on deck near or in any hold or compartment containing a Class 3 (flammable) liquid, must be suitable for use in hazardous locations where fire or explosion hazards may exist.

§ 176.325 Smoking or open flame and posting of warning signs.

(a) Smoking or the use of open flame is prohibited in any hold or compartment containing a Class 3 (flammable) or combustible liquid, near any Class 3 (flammable) or combustible liquid stowed on deck, or near any ventilator leading to a hold containing such material.

(b) A sign carrying the legend:

FLAMMABLE VAPORS
KEEP LIGHTS AND FIRE AWAY
NO SMOKING

must be conspicuously posted at each approach to a Class 3 (flammable) or combustible liquid stowed ''on deck'' and near each cargo hold ventilator leading to a hold or compartment containing this material. This sign must be painted on a white background using red letters. The letters may not be less than 8 cm (3 inches) high.

§ 176.340 Combustible liquids in portable tanks.

Combustible liquids, having a flash point of 38°C (100°F) or higher, may be transported by vessel only in one of the portable tanks as specified below:

(a) Portable tanks authorized in § 173.241 of this subchapter.

(b) In nonspecification portable tanks, subject to the following conditions:

(1) Each portable tank must conform to a DOT specification 57 portable tank, except as otherwise provided in this paragraph;

(2) The rated capacity of the tank may not exceed 4,542 liters (1,200 gallons), and the rated gross weight may not exceed 13,608 kg (30,000 pounds);

(3) The vibration test need not be performed;

(4) When the total surface area of the tank exceeds 14.9 square meters (160 square feet), the total emergency venting capacity must be determined in accordance with Table I in § 178.345–10 of this subchapter;

(5) ln place of a specification identification marking, the tank must be marked, on two sides in letters at least 5 cm (2 inches) high on contrasting background: ''FOR COMBUSTIBLE LIQUIDS ONLY'' and ''49 CFR 176.340''. This latter marking constitutes certification by the person offering the combustible liquid materials for transportation that the portable tank conforms to this paragraph;

(6) Each tank must be made of steel;

(7) The design pressure of the tank must be not less than 62 kPa (9 psi);

(8) No pressure relief device may open at less than 34.4 kPa (5 psi);

(9) Each tank must be retested and marked at least once every 2 years in accordance with the requirements applicable to a DOT specification 57 portable tank in § 173.32(e) (2), (3), and (4) of this subchapter; and

(10) Each tank must conform to the provisions of § 173.24 of this subchapter and paragraphs (g), (h), (i), and (k) of § 173.32 of this subchapter.

(c) Portable tanks approved by the Commandant, USCG (G–MSO).

[Amdt. 176–30, 55 FR 52705, Dec. 21, 1990, as amended by Amdt. 176–41, 61 FR 51339, Oct. 1, 1996; 62 FR 51561, Oct. 1, 1997]

Subpart J—Detailed Requirements for Class 4 (Flammable Solids), Class 5 (Oxidizers and Organic Peroxides), and Division 1.5 (Blasting Agents) Materials

SOURCE: Amdt. 176–30, 55 FR 52706, Dec. 21, 1990, unless otherwise noted.

§ 176.400 Stowage of Division 1.5 (blasting agents), Class 4 (flammable solids) and Class 5 (oxidizers and organic peroxides) materials.

(a) Class 4 (flammable solid) material and Division 5.2 (organic peroxide) material must be kept as cool as reasonably practicable and be stowed away from all sources of heat and ignition.

(b) Division 5.2 (organic peroxide) material must be stowed away from living quarters or access to them. Division 5.2 (organic peroxide) material not requiring temperature control should be protected from radiant heat, which includes direct rays of the sun, and stowed in a cool, well-ventilated area.

(c) No Division 1.5 (blasting agents) or Class 5 (oxidizers and organic peroxides) material being transported by vessel may be stowed in the same hold or compartment with any readily combustible material such as a combustible liquid, a textile product, or with a finely divided substance, such as an organic powder.

(d) No Division 1.5 (blasting agents) or Class 5 (oxidizers and organic peroxides) material being transported by vessel may be stowed in a hold or compartment containing sulfur in bulk, or in any hold or compartment above, below, or adjacent to one containing sulfur in bulk.

§ 176.405 Stowage of charcoal.

(a) Before stowing charcoal Division 4.2 (flammable solid), UN 1361, NA 1361, or UN 1362 on a vessel for transportation, the hold or compartment in which it is to be stowed must be swept as clean as practicable. All residue of any former cargo, including especially a petroleum product, a vegetable or animal oil, nitrate, or sulfur, must be removed.

(b) Charcoal packed in bags and offered for transportation on board a vessel in a quantity over 1016 kg (2240 pounds) must be loaded so that the bags are laid horizontally and stacked with space for efficient air circulation. If the bags are not compactly filled and closed to avoid free space within, vertical and horizontal dunnage strips must be laid between the bags. Space for ventilating must be maintained near bulkheads, the shell of the vessel, the deck, and the overhead. No more than 40,600 kg (89,508 pounds) of charcoal may be stowed in a hold or compartment when other stowage space is available. If the unavailability of hold or compartment space requires the stowage of a larger amount, the arrangement of the stow for ventilation must be adjusted to ensure a sufficient venting effect.

(c) Any loose material from bags broken during loading must be removed. Broken bags may be repacked or have the closures repaired and the repaired bags restowed.

(d) Charcoal ''screenings'' packed in bags must be stowed to provide spaces for air circulation between tiers regardless of the quantity stowed.

§ 176.410 Division 1.5 (blasting agents) materials, ammonium nitrate and ammonium nitrate mixtures.

(a) This section prescribes requirements to be observed with respect to transportation of each of the following hazardous materials by vessel:

(1) Explosives, blasting, type E, and Explosives, blasting, type B, Division 1.5 (blasting agent) compatibility group D, UN 0331 and UN 0332.

(2) Ammonium nitrate fertilizer, Division 5.1 (oxidizer), UN 1942.

(3) Ammonium nitrate fertilizer, Division 5.1 (oxidizer), UN 2068.

(4) Ammonium nitrate fertilizer, Division 5.1 (oxidizer), UN 2067.

(5) Ammonium nitrate fertilizer, Division 5.1 (oxidizer), UN 2069 or UN 2072.

(6) Ammonium nitrate fertilizer, Division 5.1 (oxidizer), UN 2070.

(b) This section does not apply to Ammonium nitrate fertilizer, Class 9, UN 2071 or to any non-acidic ammonium nitrate mixed fertilizer containing 13 percent or less ammonium nitrate, less than 5 percent organic material, and no other oxidizing material, and which does not meet the criteria for any other hazard set forth in part 173 of this subchapter.

(c) When Division 1.5 (blasting agents) compatibility group D materials, ammonium nitrate, or any of the ammonium nitrate fertilizers listed in paragraph (a) of this section are transported by vessel:

(1) They must be stowed well away from any steam pipe, electric circuit, or other source of heat;

(2) Smoking is prohibited except in designated areas away from the material and ''No-Smoking'' signs must be posted in accordance with §176.60;

(3) Fire hoses must be connected, laid out, and tested before loading or unloading commences; and

(4) A fire watch must be posted in the hold or compartment where the material is being loaded or unloaded.

(d) When any of the hazardous materials listed in paragraph (a) of this section is transported in bags by vessel:

(1) The requirements specified in paragraph (c) of this section must be complied with;

(2) The temperature of the bagged material may not exceed 54°C (130°F);

(3) Minimum dunnage and sweatboards must be used to prevent any friction or abrasion of bags, and to allow for the circulation of air and access of water in the event of fire;

(4) The bags must be stowed from side to side, out to the sweatboards;

(5) A space of 46 cm (18 inches) must be provided between any transverse bulkhead and the bags;

(6) The bags must be stowed so as to provide a 46 cm (18 inch) athwartship trench along the centerline of the compartment, continuous from top to bottom;

(7) The bags must be stowed so as to provide a 46 cm (18 inch) amidship trench running fore and aft from bulkhead to bulkhead;

(8) The bags may not be stowed less than 46 cm (18 inches) from any overhead deck beam;

(9) The bags must be stowed so as to provide vent flues 36 cm (14 inches) square at each corner of the hatch continuous from top to bottom;

(10) Trenching must be accomplished by alternating the direction of the bags in each tier (bulkheading); and

(11) The bags must be blocked and braced as necessary to prevent shifting of the bagged cargo adjacent to any trench area.

(e) Notwithstanding §176.83(b) of this part, ammonium nitrate and ammonium nitrate fertilizers classed as Division 5.1 (oxidizers) materials, may be stowed in the same hold, compartment, magazine, or freight container with Class 1 materials (explosive), except those containing chlorates, in accordance with the segregation and separation requirements of §176.144 of this part applying to Explosives, blasting, type B, and Explosives, blasting, type E, Division 1.5 compatibility group D.

(f) No mixture containing ammonium nitrate and any ingredient which would accelerate the decomposition of ammonium nitrate under conditions incident to transportation may be transported by vessel.

[Amdt. 176–30, 55 FR 52706, Dec. 21, 1990, as amended at 56 FR 66282, Dec. 20, 1991; Amdt. 176–34, 58 FR 51533, Oct. 1, 1993; Amdt. 176–38, 60 FR 49111, Sept. 21, 1995]

§176.415 Permit requirements for Division 1.5 (blasting agents), ammonium nitrates, and certain ammonium nitrate fertilizers.

(a) Except as provided in paragraph (b) of this section, before any of the following material is loaded on or unloaded from a vessel at any waterfront facility, the owner/operator must obtain written permission from the nearest COTP:

(1) Ammonium nitrate UN 1942, ammonium nitrate fertilizers containing

more than 60 percent ammonium nitrate, ammonium nitrate fertilizer, Division 5.1 (oxidizer) UN 2070, or Division 1.5 (blasting agent) compatibility group D materials packaged in a paper bag, burlap bag, or other nonrigid combustible packaging, or any rigid packaging with combustible inside packagings.

(2) Any other ammonium nitrate or ammonium nitrate fertilizer not listed in § 176.410 (a) or (b) except ammonium nitrate fertilizer, Class 9, UN 2071.

(b) Any of the following may be loaded on or unloaded from a vessel at any waterfront facility without a permit:

(1) Ammonium nitrate fertilizer, Division 5.1 (oxidizer) UN 1942, in a rigid packaging with noncombustible inside packaging.

(2) Ammonium nitrate fertilizer, Division 5.1 (oxidizer) UN 2067, if the nearest COTP is notified at least 24 hours in advance of any loading or unloading in excess of 454 kg (1,000 pounds).

(3) Ammonium nitrate fertilizer, n.o.s., Division 5.1 (oxidizer) UN 2072, containing 40 percent or more fine calcium carbonate or dolomite.

(4) Non-acidic ammonium nitrate fertilizer, n.o.s., Division 5.1 (oxidizer) UN 2072, containing less than 5 percent organic material and 60 percent or less ammonium nitrate.

(5) Division 1.5 (blasting agents) compatibility group D material in a rigid packaging with non-combustible inside packaging.

(6) Ammonium nitrate fertilizer, Class 9, UN 2071.

(c) Before a permit may be issued, the following requirements must be met in addition to any others the COTP may impose:

(1) If the material is ammonium nitrate fertilizer, Division 5.1 (oxidizer), UN2070; or Explosives, blasting, type E, Division 1.5 (blasting agents) compatibility group D, UN0332 in combustible packaging or in a rigid packaging with combustible inside packaging, it must be loaded or unloaded at a facility remote from populous areas or high value or high hazard industrial facilities so that in the event of fire or explosion loss of lives and property may be minimized;

(2) If the material is an ammonium nitrate fertilizer, Division 5.1 (oxidizer), UN2070, containing more than 60 percent ammonium nitrate; or ammonium nitrate fertilizer, Division 5.1 (oxidizer), UN2070 in rigid packagings with combustible inside packagings, it must be loaded or unloaded at a facility removed from congested areas or high value or high hazard industrial facilities;

(3) Each facility at which the material is to be loaded or unloaded must conform with the requirements of the port security and local regulations and must have an abundance of water readily available for fire fighting;

(4) Each facility at which the material is to be loaded or unloaded must be located so that each vessel to be loaded or unloaded has an unrestricted passage to open water. Each vessel must be moored bow to seaward, and must be maintained in a mobile status during loading, unloading, or handling operations by the presence of tugs or the readiness of engines. Each vessel must have two wire towing hawsers, each having an eye spice, lowered to the water's edge, one at the bow and the other at the stern; and

(5) If the material is ammonium nitrate fertilizer, Division 5.1 (oxidizer), UN2070; an ammonium nitrate fertilizer, Division 5.1 (oxidizer) containing more than 60 percent ammonium nitrate; or a Division 1.5 (blasting agents) compatibility group D material in non-rigid combustible packaging and loaded in freight containers or transport vehicles, it may be loaded or unloaded at a non-isolated facility provided that facility is approved by the COTP.

[Amdt. 176–30, 55 FR 52706, Dec. 21, 1990, as amended at 56 FR 66282, Dec. 20, 1991; Amdt. 176–35, 59 FR 49134, Sept. 26, 1994]

Subpart K—[Reserved]

Subpart L—Detailed Requirements for Division 2.3 (Poisonous Gas) and Division 6.1 (Poisonous) Materials

SOURCE: Amdt. 176–30, 55 FR 52708, Dec. 21, 1990, unless otherwise noted.

§176.600 General stowage requirement.

(a) Each package required to have a POISON GAS or POISON label thereon being transported on a vessel must be stowed clear of living quarters and any ventilation ducts serving living quarters and separate from foodstuffs.

(b)Each package required to have both a POISON GAS label and a FLAMMABLE GAS label thereon must be segregated as a Division 2.1 (flammable gas) material.

(c) Each package required to have a KEEP AWAY FROM FOOD label must be stowed away from foodstuffs.

(d) Each package of Division 2.3 (poisonous gas) material or Division 6.1 (poison) material which also bears a FLAMMABLE LIQUID or FLAMMABLE GAS label must be stowed in a mechanically ventilated space, kept as cool as reasonably practicable, and be stowed away from all sources of heat and ignition.

[Amdt. 176–30, 55 FR 52708, Dec. 21, 1990, as amended at 57 FR 45465, Oct. 1, 1992; Amdt. 176–35, 59 FR 49134, Sept. 26, 1994]

EFFECTIVE DATE NOTE: By Amdt. 176–42, 62 FR 1236, Jan. 8, 1997, §176.600(a) was revised, effective Oct. 1, 1997. At 62 FR 39398, July 22, 1997, the effective date was delayed until Oct. 1, 1998. For the convenience of the user the revised text is set forth as follows:

§176.600 General stowage requirement.

(a) Each package required to have a POISON GAS, POISON INHALATION HAZARD, or POISON label thereon being transported on a vessel must be stowed clear of living quarters and any ventilation ducts serving living quarters and separate from foodstuffs.

* * * * *

§176.605 Care following leakage or sifting of Division 2.3 (poisonous gas) and Division 6.1 (poisonous) materials.

A hold or compartment containing a package of a Division 2.3 (poisonous gas) or Division 6.1 (poisonous) material which has leaked or sifted must be thoroughly cleaned and decontaminated after the cargo is unloaded and before the hold or compartment is used for the stowage of any other cargo.

Subpart M—Detailed Requirements for Radioactive Materials

SOURCE: Amdt. 176–15, 48 FR 10245, Mar. 10, 1983, unless otherwise noted.

§176.700 General stowage requirements.

(a) [Reserved]

(b) A package of radioactive materials which in still air has a surface temperature more than 5° C (9° F) above the ambient air may not be overstowed with any other cargo. If the package is stowed under deck, the hold or compartment in which it is stowed must be ventilated.

(c) Each fissile material, controlled shipment must be stowed in a separate hold, compartment, or defined deck area and be separated by a distance of at least six meters (20 feet) from all other RADIOACTIVE YELLOW–II or YELLOW–III labeled packages.

(d) For a shipment of radioactive materials requiring supplemental operational procedures, the shipper must furnish the master or person in charge of the vessel a copy of the necessary operational instructions.

(e) A person may not remain unnecessarily in a hold, or compartment, or in the immediate vicinity of any package on deck, containing radioactive materials.

(The information collection requirements in paragraph (d) were approved by the Office of Management and Budget under control numbers 2137–0534, 2137–0535 and 2137–0536)

[Amdt. 176–15, 48 FR 10245, Mar. 10, 1983, as amended by Amdt. 176–15, 48 FR 31220, July 7, 1983; Amdt. 176–23, 50 FR 41523, Oct. 11, 1985; Amdt. 176–37, 60 FR 50333, Sept. 28, 1995]

§176.704 Requirements relating to transport indexes.

(a) The sum of the transport indexes for all packages of Class 7 (radioactive) materials on board a vessel may not exceed the limits specified in Table III.

(b) For packages in freight containers, the radiation level may not exceed 2 mSv per hour (200 mrem per hour) at any point on the surface and 0.1 mSv per hour (10 mrem per hour) at two meters (6.6 feet) from the outside surface of the freight container.

(c) The limitations specified in Table III do not apply to consignments of LSA materials if the packages are marked ''RADIOACTIVE LSA'' and no fissile Class 7 (radioactive) materials are included in the shipment.

(d) Each group of fissile packages must be separated from other Class 7 (radioactive) material by a distance of at least six meters (20 feet) at all times.

(e) The limitations specified in paragraphs (a) through (c) of this section do not apply when the entire vessel is reserved or chartered for use by a single offeror under exclusive use conditions if—

(1) The number of fissile packages of Class 7 (radioactive) materials aboard the vessel does not exceed the amount authorized in § 173.451 through § 173.459 of this subchapter; and

(2) The entire shipment operation is approved by the Associate Administrator for Hazardous Materials Safety in advance.

(f) Table III is as follows:

TABLE III—LIMITS FOR FREIGHT CONTAINERS AND CONVEYANCES

Type of freight container or conveyance	Limit on total sum of transport indexes in a single freight container or aboard a conveyance			
	Not under exclusive use		Under exclusive use	
	Non-fissile material	Fissile material	Non-fissile material	Fissile material[a]
Freight container—Small	50	50	N/A	N/A.
Freight container—Large	50	50	No limit	100[b].
Vessel[c]				
1. Hold, compartment or defined deck area:				
Packages, overpacks, small freight containers	50	50	No limit	100[b].
Large freight containers	200[d]	50	No limit	100[b].
2. Total vessel:				
Packages, etc.	200[d]	200[d]	No limit[e]	200[e].
Large freight containers	No limit[d]	No limit[d]	No limit	No limit[d].

[a] Provided that transport is direct from the consignor to the consignee without any intermediate in-transit storage, where the total TI exceed 50.

[b] In cases in which the total TI is greater than 50, the consignment must be so handled and stowed so that it is always separated from any package, overpack, portable tank or freight container carrying Class 7 (radioactive) materials by at least 6 meters (20 feet).

[c] For vessels the requirements given in 1 and 2 must be fulfilled.

[d] Provided that the packages, overpacks, portable tanks or freight containers, as applicable, are stowed so that the total sum of the TI's in any group does not exceed 50, and that each group is handled and stowed so that the groups are separate from each other by at least 6 meters (20 feet).

[e] Packages or overpacks carried in or on a transport vehicle which are offered for transport under the provisions of § 173.441(b) of this subchapter may be transported by vessel provided that they are not removed from the vehicle at anytime while on board the vessel.

[Amdt. 176–37, 60 FR 50333, Sept. 28, 1995, as amended by 176–37, 61 FR 20753, May 8, 1996]

§ 176.708 Segregation distance table.

(a) Table IV applies to the stowage of packages of Class 7 (radioactive) materials on board a vessel with regard to transport index numbers which are shown on the labels of individual packages.

(b) RADIOACTIVE YELLOW–II or YELLOW–III labeled packages may not be stowed any closer to living accommodations, regularly occupied working spaces, spaces that may be continually occupied by any person (except those spaces exclusively reserved for couriers specifically authorized to accompany such packages), or undeveloped film than the distances specified in TABLE IV.

(c) Where only one consignment of a Class 7 (radioactive) material is to be loaded on board a vessel under exclusive use conditions, the appropriate segregation distance may be established by demonstrating that the direct measurement of the radiation level at regularly occupied working spaces and living quarters is less than 7.5 microsieverts per hour (0.75 mrem per hour).

(d) More than one consignment may be loaded on board a vessel with the appropriate segregation distance established by demonstrating that direct measurement of the radiation level at regularly occupied working spaces and living quarters is less than 7.5 microSieverts per hour (0.75 mrem per hour), provided that:

(1) The vessel has been chartered for the exclusive use of a competent person specialized in the carriage of Class 7 (radioactive) material; and

(2) Stowage arrangements have been predetermined for the entire voyage, including any Class 7 (radioactive) material to be loaded at ports of call enroute.

(e) The radiation level must be measured by a responsible person skilled in the use of monitoring instruments.

(f) Table IV is as follows:

TABLE IV

Sum of transport indexes of the packages	Minimum distance in feet from living accommodation or regularly occupied working space		Minimum distance in feet from undeveloped film and plates																							
			1 day voyage			2 day voyage			4 day voyage			10 day voyage			20 day voyage			30 day voyage			40 day voyage			50 day voyage		
	Cargo thickness in feet (unit density)																									
.....	Nil	3	Nil	3	6	Nil	3	6	Nil	3	6	Nil	3	6	Nil	3	6	Nil	3	6	Nil	3	6	Nil	3	6
0.1 to 0.5	5	X	6	X	X	8	X	X	11	X	X	17	4	X	25	6	X	30	7	X	35	8	X	39	9	X
0.6 to 1	6	X	8	X	X	11	X	X	16	4	X	25	6	X	35	8	X	42	10	X	50	12	X	55	13	X
1.1 to 2	9	X	11	X	X	16	4	X	22	5	X	35	8	X	50	12	X	61	14	X	70	17	X	78	19	X
2.1 to 3	10	X	14	X	X	19	5	X	27	6	X	42	10	X	61	14	X	74	18	X	86	20	X	96	23	X
3.1 to 5	13	X	17	4	X	25	6	X	35	8	X	55	13	X	78	19	X	96	23	X	110	26	X	124	29	7
5.1 to 10	19	4	25	6	X	35	8	X	50	12	X	78	19	X	110	26	X	135	33	8	155	37	9	175	42	10
10.1 to 20	26	6	35	8	X	50	12	X	69	17	X	110	26	X	155	37	9	190	46	11	220	53	13	250	59	14
20.1 to 30	32	8	43	10	X	61	14	X	85	20	X	135	32	8	190	45	11	235	56	13	270	65	16	305	72	17
30.1 to 50	42	10	55	13	X	78	19	X	110	26	X	175	42	10	245	58	14	300	73	17	350	84	20	390	94	22
50.1 to 100	59	14	78	19	X	110	26	X	155	37	9	245	59	14	350	82	20	430	105	24	515	118	28	550	130	32
100.1 to 150	72	17	96	23	X	135	32	8	190	46	11	300	72	17	425	100	24	525	125	30	600	145	35	(7)	165	39
150.1 to 200	84	20	110	26	X	155	37	9	200	53	13	350	84	20	490	115	28	600	140	35	(7)	165	40	(7)	190	45
200.1 to 300	105	24	135	32	X	190	46	11	270	64	15	425	105	25	600	145	35	(7)	180	42	(7)	205	49	(7)	230	55
300.1 to 400	120	28	160	37	9	220	53	13	310	75	18	500	120	28	(7)	165	40	(7)	205	49	(7)	235	57	(7)	265	63

Note:

(1) X—indicates that thickness of screening cargo is sufficient without any additional segregation distance.

(2) By using 6 feet of intervening unit density cargo for persons and 10 feet for film and plates, no distance shielding is necessary for any length of voyage specified.

(3) Using 1 steel bulkhead or steel deck—multiply segregation distance by 0.8. Using 2 steel bulkheads or steel decks—multiply segregation distance by 0.64.

(4) ''Cargo of Unit Density'' means cargo stowed at a density of 1 ton (long) per 36 cubic feet; where the density is less than this the depth of cargo specified must be increased in proportion.

(5) ''Minimum distance'' means the least in any direction whether vertical or horizontal from the outer surface of the nearest package.

(6) The total consignment on board at any time must not exceed transport indexes totalling 200 except if carried under the provisions of § 176.704(f). The figures below the double line of the table should be used in such a contingency.

(7) Not to be carried unless screening by other cargo and bulkheads can be arranged in accordance with the other columns.

[Amdt. 176–15, 48 FR 10245, Mar. 10, 1983, as amended by Amdt. 176–37, 60 FR 50334, Sept. 28, 1995]

§ 176.710 Care following leakage or sifting of radioactive materials.

(a) In case of fire, collision, or breakage involving any shipment of radioactive materials, other than materials of low specific activity, the radioactive materials must be segregated from unnecessary contact with personnel. In case of obvious leakage, or if the inside container appears to be damaged, the stowage area (hold, compartment, or deck area) containing this cargo must be isolated as much as possible to prevent radioactive material from entering any person's body through contact, inhalation, or ingestion. No person may handle the material or remain in the vicinity unless supervised by a qualified person.

(b) A hold or compartment in which leakage of radioactive materials has occurred may not be used for other cargo until it is decontaminated in accordance with the requirements of § 176.715.

(c) For reporting requirements, see § 171.15 of this subchapter.

§ 176.715 Contamination control.

Each hold, compartment, or deck area used for the transportation of low specific activity or surface contaminated object Class 7 (radioactive) materials under exclusive use conditions must be surveyed with appropriate radiation detection instruments after each use. Such holds, compartments, and deck areas may not be used again until the radiation dose rate at every accessible surface is less than 5 microSieverts per hour (0.5 mrem per hour), and the removable (non-fixed) radioactive surface contamination is not greater than the limits prescribed in § 173.443 of this subchapter.

[Amdt. 176–37, 60 FR 50334, Sept. 28, 1995]

Subpart N—Detailed Requirements for Class 8 (Corrosive Materials) Materials

SOURCE: Amdt. 176–30, 55 FR 52708, Dec. 21, 1990, unless otherwise noted.

§ 176.800 General stowage requirements.

(a) Each package required to have a Class 8 (corrosive) label thereon being transported on a vessel must be stowed clear of living quarters, and away from foodstuffs and cargo of an organic nature.

(b) A package of Class 8 (corrosive material) material may not be stowed over any readily combustible material.

(c) Glass carboys containing Class 8 (corrosive material) material may not be stowed on board any vessel, other than a barge, more than two tiers high unless each carboy is boxed or crated with neck protection extending to the sides of the carboy box. This protective construction must be strong enough to permit stacking one on top of the other.

(d) A Class 8 (corrosive material) material may not be stowed over a hold or compartment containing cotton unless the deck is of steel and the hatch is fitted with a tight coaming. In addition, the deck must be tight against leakage and the Class 8 (corrosive material) material may not be stowed over the square of the hatch.

(e) Each package of Class 8 (corrosive material) which also bears a FLAMMABLE LIQUID label must be stowed away from all sources of heat and ignition.

[Amdt. 176–30, 55 FR 52708, Dec. 21, 1990, as amended by Amdt. 176–39, 61 FR 18933, Apr. 29, 1996]

§ 176.805 On deck stowage.

When break bulk Class 8 (corrosive materials) materials being transported on a vessel are stowed on deck:

(a) Provisions must be made for leakage from any package to drain away from other cargo into an overboard scupper or freeing port. The drainage may not enter an enclosed drainage system other than a direct overboard scupper. If this stowage is not practical, sufficient clean dry sand must be placed under and around the lower tier of packages to absorb any leakage.

(b) Dunnage must be provided on the deck and arranged so that any leakage will be apparent.

(c) Any leakage that occurs must be washed down, using liberal quantities of water.

Subpart O—Detailed Requirements for Cotton and Vegetable Fibers, Motor Vehicles, and Asbestos

SOURCE: Amdt. 176–30, 55 FR 52708, Dec. 21, 1990, unless otherwise noted.

§ 176.900 Packaging and stowage of cotton and vegetable fibers; general.

(a) Cotton, Class 9, NA 1365, Cotton, wet, Division 4.2, UN 1365, and other vegetable fibers, Division 4.1, being transported on a vessel must be securely baled and bound. Each bale of cotton or vegetable fibers must be covered with bagging on at least three-fourths of its surface, including both ends. Cut cotton linters may be accepted for transportation by vessel when baled and covered with bagging on the soft sides only if the bale is compressed to a density of at least 512 kg/m^3 (32 pounds per cubic foot) and it is bound with at least six bands per bale. Any poorly compressed bale or any bale having damaged bindings may not be transported by vessel.

(b) Each bale of Cotton, wet, Division 4.2, UN 1365 must be stowed separately from any bales of dry cotton or vegetable fibers, in a 'tween deck space, and not overstowed. Any bale of cotton or vegetable fibers which is saturated with water may not be transported by vessel.

(c) Bales of cotton or vegetable fibers showing contact with oil or grease may not be accepted for transportation by vessel.

(d) Cotton or vegetable fibers must be stowed in a hold or compartment in accordance with the following requirements:

(1) All traces of oil or residue in the hold or compartment must be removed;

(2) A recently painted hold or compartment may not be used unless it is thoroughly dry;

(3) Each ventilation cowl serving the hold or compartment must be fitted with a spark screen;

(4) When a bulkhead of the hold or compartment is common with a boiler room, engine room, coal bunker, or galley and subjected to heat, a wooden bulkhead must be erected between the bulkhead and any cotton or vegetable fibers. This wooden bulkhead must be at least 15 cm (6 inches) from a boiler room bulkhead, and at least 5 cm (2 inches) from an engine room, coal bunker, or galley bulkhead;

(5) Each 'tween deck hatch must be closed with hatch covers, tarpaulins, and dunnage; however, metal hatch covers which are sealed by other means to provide equivalent protection may be used;

(6) Each hold or compartment must be equipped with a carbon dioxide or overhead water sprinkler system or other approved fixed extinguishing system. Before loading, the extinguishing system must be examined to ensure that it is in good working condition; and

(7) Each hold or compartment must be clear of all debris and swept as clean as practicable before loading.

(e) Naked lights or any fire likely to produce sparks are not permitted on the vessel, dock area, or on any lighters alongside a vessel during loading or unloading of cotton or vegetable fibers.

(f) Upon completion of stowage, each opening must be completely closed. Where required, tarpaulins must be fitted and secured in place to provide a tight hold. During a period of temporary stoppage of loading or unloading, a hatch may be left open. However, during that period, a fire watch, designated by the master or officer-in-charge, must be stationed in the hold or compartment in which the cotton or vegetable fibers are stowed.

(g) At least one fire hose must be connected while cotton or vegetable fibers are being loaded or unloaded. Each fire pump must be operated before any loading or unloading. Pressure must be maintained on each fire main during the loading and the fire hose laid out ready for immediate use. Portable fire extinguishers must be placed to be readily available. The fire hose, fire pumps, and fire extinguishers may be the vessel's equipment or shore equipment.

(h) Smoking is not permitted on a vessel during the loading or unloading of cotton or vegetable fibers except at those times and in those places designated by the master. ''NO SMOKING'' signs must be conspicuously posted in appropriate places, and the

responsible person in charge of the loading or unloading (see § 176.57 of this part) must ensure that they are observed.

(i) Cotton or vegetable fibers may be stowed in the same hold over bulk sulfur if the sulfur has been trimmed and leveled and the hold is thoroughly cleaned of sulfur dust. A tight floor of two layers of 2.54 cm (1 inch) crossed clean dunnage boards must be laid on the sulfur before cotton or vegetable fibers are stowed. These substances may be stowed alongside each other in the same hold if they are separated by a tight dustproof wood bulkhead.

(j) Cotton or vegetable fibers may not be stowed in a 'tween deck hold over bulk sulfur in a lower hold unless the 'tween deck hold has been thoroughly cleaned of all sulfur dust and the 'tween deck hatch covers are in place and covered with tarpaulins and dunnage.

§ 176.901 Stowage of cotton or vegetable fibers with rosin or pitch.

(a) Unless impracticable, cotton or vegetable fibers being transported on a vessel may not be stowed in the same hold or compartment with rosin or pitch being transported on the same vessel.

(b) When separate stowage is impracticable, the cotton or vegetable fibers may be stowed in the same hold or compartment with rosin or pitch if they are separated by clean dunnage or a cargo of a non-combustible nature. When such stowage within the same hold or compartment involves large amounts of cotton or fibers or of rosin or pitch, the rosin or pitch must be floored off with at least two layers of 2.54 cm (1 inch) dunnaging and the cotton or vegetable fibers stowed above.

§ 176.903 Stowage of cotton or vegetable fibers with coal.

Cotton or vegetable fibers being transported on a vessel may not be stowed in the same hold with coal. They may be stowed in adjacent holds if the holds are separated by a tight steel bulkhead and the cotton or vegetable fibers are dunnaged at least 5 cm (2 inches) off the bulkhead. Cotton or vegetable fibers may be stowed in a hold above or below one in which coal is stowed if there is a tight steel intervening deck and all hatch covers are in place and covered with tarpaulins.

§ 176.905 Motor vehicles or mechanical equipment powered by internal combustion engines.

(a) A motor vehicle or any mechanized equipment powered by an internal combustion engine is subject to the following requirements when carried as cargo on a vessel:

(1) Before being loaded on a vessel, each motor vehicle or mechanical equipment must be inspected for fuel leaks and identifiable faults in the electrical system that could result in short circuit or other unintended electrical source of ignition. A motor vehicle or mechanical equipment showing any signs of leakage or electrical fault may not be transported.

(2) The fuel tank of a motor vehicle or mechanical equipment powered by liquid fuel may not be more than one-fourth full.

(3) Whenever possible, each vehicle or mechanical equipment must be stowed to allow for its inspection during transit.

(4) Motor vehicles or mechanical equipment may be refueled when necessary in the hold of a vessel in accordance with § 176.78.

(5) When a motor vehicle or mechanical equipment with fuel in its tanks is stowed in a closed freight container, a warning, displayed on a contrasting background and readily legible from a distance of 8 meters (26 feet), must be affixed to the access doors to read as follows:

WARNING–MAY CONTAIN EXPLOSIVE MIXTURES WITH AIR—KEEP IGNITION SOURCES AWAY WHEN OPENING

(6) A motor vehicle or mechanical equipment's ignition key may not be in the ignition while the vehicle or mechanical equipment is stowed aboard a vessel.

(b) All equipment used for handling vehicles or mechanical equipment must be designed so that the fuel tank and fuel system of the vehicle or mechanical equipment are protected from stress that might cause rupture or other damage incident to handling.

(c) Two hand-held, portable, dry chemical fire extinguishers of at least 4.5 kg (10 pounds) capacity each must be separately located in an accessible location in each hold or compartment in which any motor vehicle or mechanical equipment is stowed.

(d) ''NO SMOKING'' signs must be conspicuously posted at each access opening to the hold or compartment.

(e) Each portable electrical light, including a flashlight, used in the stowage area must be an approved, explosion-proof type. All electrical connections for any portable light must be made to outlets outside the space in which any vehicle or mechanical equipment is stowed.

(f) Each hold or compartment must be ventilated and fitted with an overhead water sprinkler system or fixed fire extinguishing system.

(g) Each hold or compartment must be equipped with a smoke or fire detection system capable of alerting personnel on the bridge.

(h) All electrical equipment in the hold or compartment other than fixed explosion-proof lighting must be disconnected from its power source at a location outside the hold or compartment during the handling and transportation of any vehicle or mechanical equipment. Where the disconnecting means is a switch or circuit breaker, it must be locked in the open position until all vehicles have been removed.

(i) *Exceptions.* A motor vehicle or mechanical equipment is excepted from the requirements of this subchapter if the following requirements are met:

(1) The motor vehicle or mechanical equipment has an internal combustion engine using liquid fuel that has a flashpoint less than 38 °C (100°F), the fuel tank is empty, and the engine is run until it stalls for lack of fuel;

(2) The motor vehicle or mechanical equipment has an internal combustion engine using liquid fuel that has a flashpoint of 38 °C (100 °F) or higher, the fuel tank contains 418 liters (110 gallons) of fuel or less, and there are no fuel leaks in any portion of the fuel system;

(3) The motor vehicle or mechanical equipment is stowed in a hold or compartment designated by the administration of the country in which the vessel is registered to be specially suited for vehicles. *See* 46 CFR 70.10–44 and 90.10–38 for U.S. vessels;

(4) The motor vehicle or mechanical equipment is electrically powered by wet electric storage batteries; or

(5) The motor vehicle or mechanical equipment is equipped with liquefied petroleum gas or other compressed gas fuel tanks, the tanks are completely emptied of liquid and the positive pressure in the tank does not exceed 2 bar (29 psi), the line from the fuel tank to the regulator and the regulator itself is drained of all trace of (liquid) gas, and the fuel shut-off valve is closed.

(j) Except as provided in §173.220(f) of this subchapter, the provisions of this subchapter do not apply to items of equipment such as fire extinguishers, compressed gas accumulators, airbag inflators and the like which are installed in the motor vehicle or mechanical equipment if they are necessary for the operation of the vehicle or equipment, or for the safety of its operator or passengers.

[Amdt. 176–43, 62 FR 24742, May 6, 1997]

PART 177—CARRIAGE BY PUBLIC HIGHWAY

Subpart A—General Information and Regulations

Sec.
177.800 Purpose and scope of this part and responsibility for compliance and training.
177.801 Unacceptable hazardous materials shipments.
177.802 Inspection.
177.804 Compliance with Federal Motor Carrier Safety Regulations.
177.810 Vehicular tunnels.
177.816 Driver training.
177.817 Shipping papers.
177.823 Movement of motor vehicles in emergency situations.

Subpart B—Loading and Unloading

177.834 General requirements.
177.835 Class 1 (explosive) materials.
177.837 Class 3 (flammable liquid) materials.
177.838 Class 4 (flammable solid) materials, Class 5 (oxidizing) materials, and Division 4.2 (pyroforic liquid) materials.
177.839 Class 8 (corrosive) materials.
177.840 Class 2 (gases) materials.
177.841 Division 6.1 (poisonous) and Division 2.3 (poisonous gas) materials.

177.842 Class 7 (radioactive) material.
177.843 Contamination of vehicles.

Subpart C—Segregation and Separation Chart of Hazardous Materials

177.848 Segregation of hazardous materials.

Subpart D—Vehicles and Shipments in Transit; Accidents

177.854 Disabled vehicles and broken or leaking packages; repairs.

Subpart E—Regulations Applying to Hazardous Material on Motor Vehicles Carrying Passengers for Hire

177.870 Regulations for passenger carrying vehicles.

AUTHORITY: 49 U.S.C. 5101–5127; 49 CFR 1.53.

Subpart A—General Information and Regulations

§ 177.800 Purpose and scope of this part and responsibility for compliance and training.

(a) *Purpose and scope.* This part prescribes requirements, in addition to those contained in parts 171, 172, 173, 178 and 180 of this subchapter, that are applicable to the acceptance and transportation of hazardous materials by private, common, or contract carriers by motor vehicle.

(b) *Responsibility for compliance.* Unless this subchapter specifically provides that another person shall perform a particular duty, each carrier, including a connecting carrier, shall perform the duties specified and comply with all applicable requirements in this part and shall ensure its hazmat employees receive training in relation thereto.

(c) *Responsibility for training.* A carrier may not transport a hazardous material by motor vehicle unless each of its hazmat employees involved in that transportation is trained as required by this part and subpart H of part 172 of this subchapter.

(d) *No unnecessary delay in movement of shipments.* All shipments of hazardous materials must be transported without unnecessary delay, from and including the time of commencement of the loading of the hazardous material until its final unloading at destination.

[Amdt. 177–79, 57 FR 20954, May 15, 1992, as amended by Amdt.177–86, 61 FR 18933, Apr. 29, 1996]

§ 177.801 Unacceptable hazardous materials shipments.

No person may accept for transportation or transport by motor vehicle a forbidden material or hazardous material that is not prepared in accordance with the requirements of this subchapter.

[Amdt. 177–87, 61 FR 27175, May 30. 1996]

§ 177.802 Inspection.

Records, equipment, packagings and containers under the control of a motor carrier, insofar as they affect safety in transportation of hazardous materials by motor vehicle, must be made available for examination and inspection by a duly authorized representative of the Department.

[Amdt. 177–71, 54 FR 25015, June 12, 1989]

§ 177.804 Compliance with Federal Motor Carrier Safety Regulations.

Motor carriers and other persons subject to this part shall comply with 49 CFR parts 390 through 397 (excluding §§ 397.3 and 397.9) to the extent those regulations apply.

[Amdt. 177–81, 58 FR 50505, Sept. 27, 1993]

§ 177.810 Vehicular tunnels.

Except as regards Class 7 (radioactive) materials, nothing contained in parts 170–189 of this subchapter shall be so construed as to nullify or supersede regulations established and published under authority of State statute or municipal ordinance regarding the kind, character, or quantity of any hazardous material permitted by such regulations to be transported through any urban vehicular tunnel used for mass transportation.

[Amdt. 177–52, 46 FR 5316, Jan. 19, 1981, as amended by Amdt. 177–78, 55 FR 52710, Dec. 21, 1990; 62 FR 51561, Oct. 1, 1997]

§ 177.816 Driver training.

(a) In addition to the training requirements of § 177.800, no carrier may transport, or cause to be transported, a

hazardous material unless each hazmat employee who will operate a motor vehicle has been trained in the applicable requirements of 49 CFR parts 390 through 397 and the procedures necessary for the safe operation of that motor vehicle. Driver training shall include the following subjects:

(1) Pre-trip safety inspection;

(2) Use of vehicle controls and equipment, including operation of emergency equipment;

(3) Operation of vehicle, including turning, backing, braking, parking, handling, and vehicle characteristics including those that affect vehicle stability, such as effects of braking and curves, effects of speed on vehicle control, dangers associated with maneuvering through curves, dangers associated with weather or road conditions that a driver may experience (e.g., blizzards, mountainous terrain, high winds), and high center of gravity;

(4) Procedures for maneuvering tunnels, bridges, and railroad crossings;

(5) Requirements pertaining to attendance of vehicles, parking, smoking, routing, and incident reporting; and

(6) Loading and unloading of materials, including—

(i) Compatibility and segregation of cargo in a mixed load;

(ii) Package handling methods; and

(iii) Load securement.

(b) *Specialized requirements for cargo tanks and portable tanks.* In addition to the training requirement of paragraph (a) of this section, each person who operates a cargo tank or a vehicle with a portable tank with a capacity of 1,000 gallons or more must receive training applicable to the requirements of this subchapter and have the appropriate State-issued commercial driver's license required by 49 CFR part 383. Specialized training shall include the following:

(1) Operation of emergency control features of the cargo tank or portable tank;

(2) Special vehicle handling characteristics, including: high center of gravity, fluid-load subject to surge, effects of fluid-load surge on braking, characteristic differences in stability among baffled, unbaffled, and multi-compartmented tanks; and effects of partial loads on vehicle stability;

(3) Loading and unloading procedures;

(4) The properties and hazards of the material transported; and

(5) Retest and inspection requirements for cargo tanks.

(c) The training required by paragraphs (a) and (b) of this section may be satisfied by compliance with the current requirements for a Commercial Driver's License (CDL) with a tank vehicle or hazardous materials endorsement.

(d) Training required by paragraph (b) of this section must conform to the requirements of §172.704 of this subchapter with respect to frequency and recordkeeping.

[Amdt. 177–79, 57 FR 20954, May 15, 1992, as amended by Amdt. 177–79, 58 FR 5852, Jan. 22, 1993]

§177.817 Shipping papers.

(a) *General requirements.* A carrier may not transport a hazardous material unless it is accompanied by a shipping paper that is prepared in accordance with §§172.200, 172.201, 172.202, and 172.203 of this subchapter.

(b) *Shipper certification.* An initial carrier may not accept a hazardous material offered for transportation unless the shipping paper describing the material includes a shipper's certification which meets the requirements in §172.204 of this subchapter. Except for a hazardous waste, the certification is not required for shipments to be transported entirely by private carriage and for bulk shipments to be transported in a cargo tank supplied by the carrier.

(c) *Requirements when interlining with carriers by rail.* A motor carrier shall mark on the shipping paper required by this section, if it offers or delivers a freight container or transport vehicle to a rail carrier for further transportation;

(1) A description of the freight container or transport vehicle; and

(2) The kind of placard affixed to the freight container or transport vehicle.

(d) This subpart does not apply to a material that is excepted from shipping paper requirements as specified in §172.200 of this subchapter.

(e) *Shipping paper accessibility—accident or inspection.* A driver of a motor vehicle containing hazardous material, and each carrier using such a vehicle, shall ensure that the shipping paper required by this section is readily available to, and recognizable by, authorities in the event of accident or inspection. Specifically, the driver and the carrier shall:

(1) Clearly distinguish the shipping paper, if it is carried with other shipping papers or other papers of any kind, by either distinctively tabbing it or by having it appear first; and

(2) Store the shipping paper as follows:

(i) When the driver is at the vehicle's controls, the shipping paper shall be: (A) Within his immediate reach while he is restrained by the lap belt; and (B) either readily visible to a person entering the driver's compartment or in a holder which is mounted to the inside of the door on the driver's side of the vehicle.

(ii) When the driver is not at the vehicle's controls, the shipping paper shall be: (A) In a holder which is mounted to the inside of the door on the driver's side of the vehicle; or (B) on the driver's seat in the vehicle.

[Amdt. 177–35, 41 FR 16130, Apr. 15, 1976, as amended by Amdt. 177–35A, 41 FR 40691, Sept. 20, 1976; Amdt. 177–48, 45 FR 47670, Nov. 10, 1980; Amdt. 177–65, 50 FR 11055, Mar. 19, 1985; Amdt. 177–72, 53 FR 17160, May 13, 1988]

§ 177.823 Movement of motor vehicles in emergency situations.

(a) A carrier may not move a transport vehicle containing a hazardous material unless the vehicle is marked and placarded in accordance with part 172 or as authorized in § 171.12a of this subchapter, or unless, in an emergency:

(1) The vehicle is escorted by a representative of a state or local government;

(2) The carrier has permission from the Department; or

(3) Movement of the transport vehicle is necessary to protect life or property.

(b) *Disposition of contents of cargo tank when unsafe to continue.* In the event of a leak in a cargo tank of such a character as to make further transportation unsafe, the leaking vehicle should be removed from the traveled portion of the highway and every available means employed for the safe disposal of the leaking material by preventing, so far as practicable, its spread over a wide area, such as by digging trenches to drain to a hole or depression in the ground, diverting the liquid away from streams or sewers if possible, or catching the liquid in containers if practicable. Smoking, and any other source of ignition, in the vicinity of a leaking cargo tank is not permitted.

(c) *Movement of leaking cargo tanks.* A leaking cargo tank may be transported only the minimum distance necessary to reach a place where the contents of the tank or compartment may be disposed of safely. Every available means must be utilized to prevent the leakage or spillage of the liquid upon the highway.

[Amdt. 177–35, 41 FR 16130, Apr. 15, 1976, as amended by Amdt. 177–67, 50 FR 41521, Oct. 11, 1985; Amdt. 177–86, 61 FR 18933, Apr. 29, 1996]

Subpart B—Loading and Unloading

NOTE: For prohibited loading and storage of hazardous materials, see § 177.848.

§ 177.834 General requirements.

(a) *Packages secured in a vehicle.* Any tank, barrel, drum, cylinder, or other packaging, not permanently attached to a motor vehicle, which contains any Class 3 (flammable liquid), Class 2 (gases). Class 8 (corrosive), Division 6.1 (poisonous), or Class 7 (radioactive) material must be secured against movement within the vehicle on which it is being transported, under conditions normally incident to transportation.

(b) [Reserved]

(c) *No smoking while loading or unloading.* Smoking on or about any motor vehicle while loading or unloading any Class 1 (explosive), Class 3 (flammable liquid), Class 4 (flammable solid), Class 5 (oxidizing), or Division 2.1 (flammable gas) materials is forbidden.

(d) *Keep fire away, loading and unloading.* Extreme care shall be taken in the loading or unloading of any Class 1 (explosive), Class 3 (flammable liquid),

Class 4 (flammable solid), Class 5 (oxidizing), or Division 2.1 (flammable gas) materials into or from any motor vehicle to keep fire away and to prevent persons in the vicinity from smoking, lighting matches, or carrying any flame or lighted cigar, pipe, or cigarette.

(e) *Handbrake set while loading and unloading.* No hazardous material shall be loaded into or on, or unloaded from, any motor vehicle unless the handbrake be securely set and all other reasonable precautions be taken to prevent motion of the motor vehicle during such loading or unloading process.

(f) *Use of tools, loading and unloading.* No tools which are likely to damage the effectiveness of the closure of any package or other container, or likely adversely to affect such package or container, shall be used for the loading or unloading of any Class 1 (explosive) material or other dangerous article.

(g) *Prevent relative motion between containers.* Containers of Class 1 (explosive), Class 3 (flammable liquid), Class 4 (flammable solid), Class 5 (oxidizing), Class 8 (corrosive), Class 2 (gases) and Division 6.1 (poisonous) materials, must be so braced as to prevent motion thereof relative to the vehicle while in transit. Containers having valves or other fittings must be so loaded that there will be the minimum likelihood of damage thereto during transportation.

(h) *Precautions concerning containers in transit; fueling road units.* Reasonable care should be taken to prevent undue rise in temperature of containers and their contents during transit. There must be no tampering with such container or the contents thereof nor any discharge of the contents of any container between point of origin and point of billed destination. Discharge of contents of any container, other than a cargo tank, must not be made prior to removal from the motor vehicle. Nothing contained in this paragraph shall be so construed as to prohibit the fueling of machinery or vehicles used in road construction or maintenance.

(i) *Attendance requirements.* (1) *Loading.* A cargo tank must be attended by a qualified person at all times when it is being loaded. The person who is responsible for loading the cargo tank is also responsible for ensuring that it is so attended.

(2) *Unloading.* A motor carrier who transports hazardous materials by a cargo tank must ensure that the cargo tank is attended by a qualified person at all times during unloading. However, the carrier's obligation to ensure attendance during unloading ceases when:

(i) The carrier's obligation for transporting the materials is fulfilled;

(ii) The cargo tank has been placed upon the consignee's premises; and

(iii) The motive power has been removed from the cargo tank and removed from the premises.

(3) A person ''attends'' the loading or unloading of a cargo tank if, throughout the process, he is awake, has an unobstructed view of the cargo tank, and is within 7.62 meters (25 feet) of the cargo tank.

(4) A person is ''qualified'' if he has been made aware of the nature of the hazardous material which is to be loaded or unloaded, he has been instructed on the procedures to be followed in emergencies, he is authorized to move the cargo tank, and he has the means to do so.

(5) A delivery hose, when attached to the cargo tank, is considered a part of the vehicle.

(j) *Manholes and valves closed.* A person may not drive a cargo tank and a motor carrier may not permit a person to drive a cargo tank motor vehicle containing a hazardous material regardless of quantity unless:

(1) All manhole closures are closed and secured; and

(2) All valves and other closures in liquid discharge systems are closed and free of leaks.

(k) [Reserved]

(l) *Use of cargo heaters when transporting certain hazardous material.* Transportation includes loading, carrying, and unloading.

(1) *When transporting Class 1 (explosive) materials.* A motor vehicle equipped with a cargo heater of any type may transport Class 1 (explosive) materials only if the cargo heater is rendered inoperable by: (i) Draining or removing the cargo heater fuel tank;

and (ii) disconnecting the heater's power source.

(2) *When transporting certain flammable material*—(i) *Use of combustion cargo heaters.* A motor vehicle equipped with a combustion cargo heater may be used to transport Class 3 (flammable liquid) or Division 2.1 (flammable gas) materials only if each of the following requirements are met:

(A) It is a catalytic heater.

(B) The heater's surface temperature cannot exceed 54 °C (130 °F)—either on a thermostatically controlled heater or on a heater without thermostatic control when the outside or ambient temperature is 16 °C (61 °F) or less.

(C) The heater is not ignited in a loaded vehicle.

(D) There is no flame, either on the catalyst or anywhere in the heater.

(E) The manufacturer has certified that the heater meets the requirements under paragraph (l)(2)(i) of this section by permanently marking the heater *''MEETS DOT REQUIREMENTS FOR CATALYTIC HEATERS USED WITH FLAMMABLE LIQUID AND GAS.''*

(F) The heater is also marked *''DO NOT LOAD INTO OR USE IN CARGO COMPARTMENTS CONTAINING FLAMMABLE LIQUID OR GAS IF FLAME IS VISIBLE ON CATALYST OR IN HEATER.''*

(G) Heater requirements under § 393.77 of this title are complied with.

(ii) *Effective date for combustion heater requirements.* The requirements under paragraph (l)(2)(i) of this section govern as follows:

(A) Use of a heater manufactured after November 14, 1975, is governed by every requirement under (l)(2)(i) of this section;

(B) Use of a heater manufactured before November 15, 1975, is governed only by the requirements under (l)(2)(i)(A), (C), (D), (F) and (G) of this section until October 1, 1976; and

(C) Use of any heater after September 30, 1976, is governed by every requirement under paragraph (l)(2)(i) of this section.

(iii) *Restrictions on automatic cargo-space-heating temperature control devices.* Restrictions on these devices have two dimensions: Restrictions upon use and restrictions which apply when the device must not be used.

(A) *Use restrictions.* An automatic cargo-space-heating temperature control device may be used when transporting Class 3 (flammable liquid) or Division 2.1 (flammable gas) materials only if each of the following requirements is met:

(*1*) Electrical apparatus in the cargo compartment is nonsparking or explosion proof.

(*2*) There is no combustion apparatus in the cargo compartment.

(*3*) There is no connection for return of air from the cargo compartment to the combustion apparatus.

(*4*) The heating system will not heat any part of the cargo to more than 54 °C (129 °F).

(*5*) Heater requirements under § 393.77 of this title are complied with.

(B) *Protection against use.* Class 3 (flammable liquid) or Division 2.1 (flammable gas) materials may be transported by a vehicle, which is equipped with an automatic cargo-space-heating temperature control device that does not meet each requirement of paragraph (l)(2)(iii)(A) of this section, only if the device is first rendered inoperable, as follows:

(*1*) Each cargo heater fuel tank, if other than LPG, must be emptied or removed.

(*2*) Each LPG fuel tank for automatic temperature control equipment must have its discharge valve closed and its fuel feed line disconnected.

(m) Tanks constructed and maintained in compliance with Spec. 106A or 110A (§§ 179.300, 179.301 of this subchapter) that are authorized for the shipment of hazardous materials by highway in part 173 of this subchapter must be carried in accordance with the following requirements:

(1) Tanks must be securely chocked or clamped on vehicles to prevent any shifting.

(2) Equipment suitable for handling a tank must be provided at any point where a tank is to be loaded upon or removed from a vehicle.

(3) No more than two cargo carrying vehicles may be in the same combination of vehicles.

(4) Compliance with §§ 174.200 and 174.204 of this subchapter for combination rail freight, highway shipments

and for trailer-on-flat-car service is required.

(n) Specification 56, 57, IM 101, and IM 102 portable tanks, when loaded, may not be stacked on each other nor placed under other freight during transportation by motor vehicle.

[29 FR 18795, Dec. 29, 1964. Redesignated at 32 FR 5606, Apr. 5, 1967]

EDITORIAL NOTE: For FEDERAL REGISTER citations affecting §177.834, see the List of CFR Sections Affected appearing in the Finding Aids section of this volume.

§177.835 Class 1 (explosive) materials.

(See also §177.834 (a) to (j).)

(a) *Engine stopped.* No Class 1 (explosive) materials shall be loaded into or on or be unloaded from any motor vehicle with the engine running.

(b) *Care in loading, unloading, or other handling of Class 1 (explosive) materials.* No bale hooks or other metal tools shall be used for the loading, unloading, or other handling of Class 1 (explosive) materials, nor shall any package or other container of Class 1 (explosive) materials, except barrels or kegs, be rolled. No packages of Class 1 (explosive) materials shall be thrown or dropped during process of loading or unloading or handling of Class 1 (explosive) materials. Special care shall be exercised to the end that packages or other containers containing Class 1 (explosive) materials shall not catch fire from sparks or hot gases from the exhaust tailpipe.

(1) Whenever tarpaulins are used for covering Class 1 (explosive) materials, they shall be secured by means of rope, wire, or other equally efficient tie downs. Class 1 (explosive) materials placards or markings required by §177.823 shall be secured, in the appropriate locations, directly to the equipment transporting the Class 1 (explosive) materials. If the vehicle is provided with placard boards, the placards must be applied to these boards.

(c) *Class 1 (explosive) materials on vehicles in combination.* Division 1.1 or 1.2 (Class A explosive) materials may not be loaded into or carried on any vehicle or a combination of vehicles if:

(1) More than two cargo carrying vehicles are in the combination;

(2) Any full trailer in the combination has a wheel base of less than 184 inches;

(3) Any vehicle in the combination is a cargo tank which is required to be marked or placarded under §177.823; or

(4) The other vehicle in the combination contains any:

(i) Substances, explosive, n.o.s., Division 1.1A (explosive) material (Initiating explosive),

(ii) Packages of Class 7 (radioactive) materials bearing ''Yellow III'' labels,

(iii) Division 2.3 (poisonous gas) or Division 6.1 (poisonous) materials, or

(iv) Hazardous materials in a portable tank or a DOT specification 106A or 110A tank.

(d) [Reserved]

(e) *No sharp projections inside body of vehicles.* No motor vehicle transporting any kind of Class 1 (explosive) material shall have on the interior of the body in which the Class 1 (explosive) materials are contained, any inwardly projecting bolts, screws, nails, or other inwardly projecting parts likely to produce damage to any package or container of Class 1 (explosive) materials during the loading or unloading process or in transit.

(f) *Class 1 (explosive) materials vehicles, floors tight and lined.* Motor vehicles transporting Division 1.1, 1.2, or 1.3 (Class A or Class B explosive) materials shall have tight floors; shall have that portion of the interior in contact with the load lined with either non-metallic material or non-ferrous metals, except that the lining is not required for truck load shipments loaded by the Departments of the Army, Navy or Air Force of the United States Government provided the Class 1 (explosive) materials are of such nature that they are not liable to leakage of dust, powder, or vapor which might become the cause of an explosion. The interior of the cargo space must be in good condition so that there will not be any likelihood of containers being damaged by exposed bolts, nuts, broken side panels or floor boards, or any similar projections.

(g) No detonator assembly or booster with detonator may be transported on the same motor vehicle with any Division 1.1, 1.2 or 1.3 (Class A or Class B

explosive) material (except other detonator assemblies, boosters with detonators or detonators), explosives for blasting or detonating cord Division 1.4 (Class C explosive) material. No detonator may be transported on the same motor vehicle with any Division 1.1, 1.2 or 1.3 (Class A or Class B explosive) material (except other detonators, detonator assemblies or boosters with detonators), explosives for blasting or detonating cord, Division 1.4 (Class C explosive) material unless—

(1) It is packed in a specification MC 201 (§ 178.318 of this subchapter) container, or

(2) The package conforms with requirements prescribed in § 173.63 of this subchapter, and its use is restricted to instances when—

(i) There is no Division 1.1, 1.2, or 1.3 (Class A or Class B explosive) material or blasting agent loaded on the motor vehicle; and

(ii) A separation of 61 cm (24 inches) is maintained between each package of detonators and each package of detonating cord; or

(3) It is packed and loaded in accordance with a method approved by the Department. One method approved by the Department is as follows:

(i) The detonators are in packagings as prescribed in § 173.63 of this subchapter which in turn are loaded into suitable containers or separate compartments. Both the detonators and the container or compartment must meet the requirements of the Institute of Makers of Explosives' Standard (IME Safety Library Publication No. 22).

(h) *Lading within body or covered tailgate closed.* Except as provided in paragraphs (g), (k), and (m) of this section, dealing with the transportation of liquid nitroglycerin, desensitized liquid nitroglycerin or diethylene glycol dinitrate, all of that portion of the lading of any motor vehicle which consists of Class 1 (explosive) materials shall be contained entirely within the body of the motor vehicle or within the horizontal outline thereof, without overhang or projection of any part of the load and if such motor vehicle has a tailboard or tailgate, it shall be closed and secured in place during such transportation. Every motor vehicle transporting Class 1 (explosive) materials must either have a closed body or have the body thereof covered with a tarpaulin, and in either event care must be taken to protect the load from moisture and sparks, except that subject to other provisions of these regulations, Class 1 (explosive) materials other than black powder may be transported on flat-bed vehicles if the explosive portion of the load on each vehicle is packed in fire and water resistant containers or covered with a fire and water resistant tarpaulin.

(i) *Class 1 (explosive) materials to be protected against damage by other lading.* No motor vehicle transporting any Class 1 (explosive) material may transport as a part of its load any metal or other articles or materials likely to damage such Class 1 (explosive) material or any package in which it is contained, unless the different parts of such load be so segregated or secured in place in or on the motor vehicle and separated by bulkheads or other suitable means as to prevent such damage.

(j) *Transfer of Class 1 (explosive) materials en route.* No Division 1.1, 1.2, or 1.3 (Class A or Class B explosive) material shall be transferred from one container to another, or from one motor vehicle to another vehicle, or from another vehicle to a motor vehicle, on any public highway, street, or road, except in case of emergency. In such cases red electric lanterns, red emergency reflectors or red flags shall be set out in the manner prescribed for disabled or stopped motor vehicles. (See Motor Carrier Safety Regulations, part 392 of this title.) In any event, all practicable means, in addition to these hereinbefore prescribed, shall be taken to protect and warn other users of the highway against the hazard involved in any such transfer or against the hazard occasioned by the emergency making such transfer necessary.

[29 FR 18795, Dec. 29, 1964. Redesignated at 32 FR 5606, Apr. 5, 1967]

EDITORIAL NOTE: For FEDERAL REGISTER citations affecting § 177.835, see the List of CFR Sections Affected appearing in the Finding Aids section of this volume.

§ 177.837 Class 3 (flammable liquid) materials.

(See also § 177.834 (a) to (j).)

(a) *Engine stopped.* Unless the engine of a cargo tank motor vehicle is to be used for the operation of a pump, no Class 3 material shall be loaded into, or on, or unloaded from any cargo tank motor vehicle while the engine is running.

(b) *Bonding and grounding containers other than cargo tanks prior to and during transfer of lading.* For containers which are not in metallic contact with each other, either metallic bonds or ground conductors shall be provided for the neutralization of possible static charges prior to and during transfers of Class 3 (flammable liquid) materials between such containers. Such bonding shall be made by first connecting an electric conductor to the container to be filled and subsequently connecting the conductor to the container from which the liquid is to come, and not in any other order. To provide against ignition of vapors by discharge of static electricity, the latter connection shall be made at a point well removed from the opening from which the Class 3 (flammable liquid) material is to be discharged.

(c) *Bonding and grounding cargo tanks before and during transfer of lading.* (1) When a cargo tank is loaded through an open filling hole, one end of a bond wire shall be connected to the stationary system piping or integrally connected steel framing, and the other end to the shell of the cargo tank to provide a continuous electrical connection. (If bonding is to the framing, it is essential that piping and framing be electrically interconnected.) This connection must be made before any filling hole is opened, and must remain in place until after the last filling hole has been closed. Additional bond wires are not needed around All-Metal flexible or swivel joints, but are required for nonmetallic flexible connections in the stationary system piping. When a cargo tank is unloaded by a suction-piping system through an open filling hole of the cargo tank, electrical continuity shall be maintained from cargo tank to receiving tank.

(2) When a cargo tank is loaded or unloaded through a vapor-tight (not open hole) top or bottom connection, so that there is no release of vapor at a point where a spark could occur, bonding or grounding, is not required. Contact of the closed connection must be made before flow starts and must not be broken until after the flow is completed.

(3) Bonding or grounding is not required when a cargo tank is unloaded through a nonvapor-tight connection into a stationary tank provided the metallic filling connection is maintained in contact with the filling hole.

[29 FR 18795, Dec. 29, 1964. Redesignated at 32 FR 5606, Apr. 5, 1967]

EDITORIAL NOTE: For FEDERAL REGISTER citations affecting §177.837, see the List of CFR Sections Affected appearing in the Finding Aids section of this volume.

§177.838 Class 4 (flammable solid) materials, Class 5 (oxidizing) materials, and Division 4.2 (pyroforic liquid) materials.

(See also §177.834 (a) to (j).)

(a) *Lading within body or covered; tailgate closed; pick-up and delivery.* All of that portion of the lading of any motor vehicle transporting Class 4 (flammable solid) or Class 5 (oxidizing) materials shall be contained entirely within the body of the motor vehicle and shall be covered by such body, by tarpaulins, or other suitable means, and if such motor vehicle has a tailboard or tailgate, it shall be closed and secured in place during such transportation: *Provided, however,* That the provisions of this paragraph need not apply to ''pick-up and delivery'' motor vehicles when such motor vehicles are used in no other transportation than in and about cities, towns, or villages. Shipment in water-tight bulk containers need not be covered by a tarpaulin or other means.

(b) *Articles to be kept dry.* Special care shall be taken in the loading of any motor vehicle with Class 4 (flammable solid) or Class 5 (oxidizing) materials which are likely to become hazardous to transport when wet, to keep them from being wetted during the loading process and to keep them dry during transit. Special care shall also be taken in the loading of any motor vehicle with Class 4 (flammable solid) or Class 5 (oxidizing) materials, which are likely to become more hazardous to transport by wetting, to keep them from being wetted during the loading

process and to keep them dry during transit. Examples of such dangerous materials are charcoal screenings, ground, crushed, or pulverized charcoal, and lump charcoal.

(c) *Lading ventilation, precautions against spontaneous combustion.* Whenever a motor carrier has knowledge concerning the hazards of spontaneous combustion or heating of any article to be loaded on a motor vehicle, such article shall be so loaded as to afford sufficient ventilation of the load to provide reasonable assurance against fire from this cause; and in such a case the motor vehicle shall be unloaded as soon as practicable after reaching its destination. Charcoal screenings, or ground, crushed, granulated, or pulverized charcoal, in bags, shall be so loaded that the bags are laid horizontally in the motor vehicle, and so piled that there will be spaces for effective air circulation, which spaces shall not be less than 10 cm (3.9 inches) wide; and air spaces shall be maintained between rows of bags. Bags shall not be piled closer than 15 cm (5.9 inches) from the top of any motor vehicle with a closed body.

(d)–(e) [Reserved]

(f) Nitrates, except ammonium nitrate having organic coating, must be loaded in closed or open type motor vehicles, which must be swept clean and be free of any projections capable of injuring bags when so packaged. When shipped in open typemotor vehicles, the lading must be suitably covered. Ammonium nitrate having organic coating must not be loaded in all-metal vehicles, other than those made of aluminum or aluminum alloys of the closed type.

(g) A motor vehicle may only contain 45.4 kg (100 pounds) or less net mass of material described as ''Smokeless powder for small arms, Division 4.1''.

(h) Division 4.2 (pyrophoric liquid) materials in cylinders. Cylinders containing Division 4.2 (pyrophoric liquid) materials, unless packed in a strong box or case and secured therein to protect valves, must be loaded with all valves and safety relief devices in the vapor space. All cylinders must be secured so that no shifting occurs in transit.

[29 FR 18795, Dec. 29, 1964. Redesignated at 32 FR 5606, Apr. 5, 1967]

EDITORIAL NOTE: For FEDERAL REGISTER citations affecting § 177.838, see the List of CFR Sections Affected appearing in the Finding Aids section of this volume.

§ 177.839 Class 8 (corrosive) materials.

(See also § 177.834(a) through (j).)

(a) *Nitric acid.* No packaging of nitric acid of 50 percent or greater concentration may be loaded above any packaging containing any other kind of material.

(b) *Storage batteries.* All storage batteries containing any electrolyte must be so loaded, if loaded with other lading, that all such batteries will be protected against other lading falling onto or against them, and adequate means must be provided in all cases for the protection and insulation of battery terminals against short circuits.

[Amdt. 177–87, 61 FR 27175, May 30, 1996]

§ 177.840 Class 2 (gases) materials.

(See also § 177.834 (a) to (j).)

(a) *Floors or platforms essentially flat.* Cylinders containing Class 2 (gases) materials shall not be loaded onto any part of the floor or platform of any motor vehicle which is not essentially flat; cylinders containing Class 2 (gases) materials may be loaded onto any motor vehicle not having a floor or platform only if such motor vehicle be equipped with suitable racks having adequate means for securing such cylinders in place therein. Nothing contained in this section shall be so construed as to prohibit the loading of such cylinders on any motor vehicle having a floor or platform and racks as hereinbefore described.

(1) *Cylinders.* To prevent their overturning, cylinders containing Class 2 (gases) materials must be securely lashed in an upright position; loaded into racks securely attached to the motor vehicle; packed in boxes or crates of such dimensions as to prevent their overturning; or loaded in a horizontal position. Specification DOT–4L cylinders must be loaded in an upright position and securely braced.

(2) *Cylinders for hydrogen, cryogenic liquid.* A Specification DOT–4L cylinder containing hydrogen, cryogenic liquid may only be transported on a motor vehicle as follows:

(i) The vehicle must have an open body equipped with a suitable rack or support having a means to hold the cylinder upright when subjected to an acceleration of 2 ''g'' in any horizontal direction;

(ii) The combined total of the hydrogen venting rates, as marked, on the cylinders transported on one motor vehicle may not exceed 60 SCF per hour;

(iii) The vehicle may not enter a tunnel; and

(iv) Highway transportation is limited to private and contract carriage and to direct movement from point of origin to destination.

(b) Portable tank containers containing Class 2 (gases) materials shall be loaded on motor vehicles only as follows:

(1) Onto a flat floor or platform of a motor vehicle.

(2) Onto a suitable frame of a motor vehicle.

(3) In either such case, such containers shall be safely and securely blocked or held down to prevent movement relative to each other or to the supporting structure when in transit, particularly during sudden starts and stops and changes of direction of the vehicle.

(4) Requirements of paragraphs (1) and (2) of this paragraph (b) shall not be construed as prohibiting stacking of containers provided the provisions of paragraph (3) of this paragraph (b) are fully complied with.

(c) [Reserved]

(d) *Engine to be stopped in cargo tanks, except for transfer pump.* No Division 2.1 (flammable gas) material shall be loaded into or on or unloaded from any cargo tank with the engine running unless the engine is used for the operation of the transfer pump of the vehicle. Unless the delivery hose is equipped with a shut-off valve at its discharge end, the engine of the motor vehicle shall be stopped at the finish of such loading or unloading operation while the filling or discharge connections are disconnected.

(e) Chlorine cargo tanks shall be shipped only when equipped (1) with a gas mask of a type approved by the The National Institute of Occupational Safety and Health (NIOSH) Pittsburgh Research Center, U.S. Department of Health and Human Services for chlorine service; (2) with an emergency kit for controlling leaks in fittings on the dome cover plate.

(f) A cargo tank motor vehicle used for transportation of chlorine may not be moved, coupled or uncoupled, when any loading or unloading connections are attached to the vehicle, nor may it be left without the power unit attached unless the vehicle is chocked or equivalent means are provided to prevent motion. For additional requirements, see § 173.315(o) of this subchapter.

(g) Each liquid discharge valve on a cargo tank, other than an engine fuel line valve, must be closed during transportation except during loading and unloading.

(h) The driver of a motor vehicle transporting a Division 2.1 (flammable gas) material that is a cryogenic liquid in a package exceeding 450 liters (119 gallons) of water capacity shall avoid unnecessary delays during transportation. If unforeseen conditions cause an excessive pressure rise, the driver shall manually vent the tank at a remote and safe location. For each shipment, the driver shall make a written record of the cargo tank pressure and ambient (outside) temperature:

(1) At the start of each trip,

(2) Immediately before and after any manual venting,

(3) At least once every five hours, and

(4) At the destination point.

(i) No person may transport a Division 2.1 (flammable gas) material that is a cryogenic liquid in a cargo tank unless the pressure of the lading is equal to or less than that used to determine the marked rated holding time (MRHT) and the one-way travel time (OWTT), marked on the tank in conformance with § 173.318(g) of this subchapter, is equal to or greater than the elapsed time between the start and termination of travel. This prohibition does not apply if, prior to expiration of the OWTT, the tank is brought to full equilibration as specified in paragraph (j) of this section.

(j) Full equilibration of a cargo tank transporting a Division 2.1 (flammable

gas) material that is a cryogenic liquid may only be done at a facility that loads or unloads a Division 2.1 (flammable gas) material that is a cryogenic liquid and must be performed and verified as follows:

(1) The temperature and pressure of the liquid must be reduced by a manually controlled release of vapor; and

(2) The pressure in the cargo tank must be measured at least ten minutes after the manual release is terminated.

(k) A carrier of carbon monoxide, cryogenic liquid must provide each driver with a self-contained air breathing apparatus that is approved by the National Institute of Occupational Safety and Health; for example, Mine Safety Appliance Co., Model 401, catalog number 461704.

(Approved by the Office of Management and Budget under control number 2137–0542)

[29 FR 18795, Dec. 29, 1964. Redesignated at 32 FR 5606, Apr. 5, 1967]

EDITORIAL NOTE: For FEDERAL REGISTER citations affecting §177.840, see the List of CFR Sections Affected appearing in the Finding Aids section of this volume.

§ 177.841 Division 6.1 (poisonous) and Division 2.3 (poisonous gas) materials.

(See also §177.834 (a) to (j).)

(a) *Arsenical compounds in bulk.* Care shall be exercised in the loading and unloading of ''arsenical dust'', ''arsenic trioxide'', and ''sodium arsenate'', allowable to be loaded into sift-proof, steel hopper-type or dump-type motor-vehicle bodies equipped with waterproof, dust-proof covers well secured in place on all openings, to accomplish such loading with the minimum spread of such compounds into the atmosphere by all means that are practicable; and no such loading or unloading shall be done near or adjacent to any place where there are or are likely to be, during the loading or unloading process assemblages of persons other than those engaged in the loading or unloading process, or upon any public highway or in any public place. Before any motor vehicle may be used for transporting any other articles, all detectable traces of arsenical materials must be removed therefrom by flushing with water, or by other appropriate method, and the marking removed.

(b) [Reserved]

(c) *Division 2.3 (poisonous gas) or Division 6.1 (poisonous) materials.* The transportation of a Division 2.3 (poisonous gas) or Division 6.1 (poisonous) material is not permitted if there is any interconnection between packagings.

(d) [Reserved]

(e) A motor carrier may not transport a package:

(1) Bearing a POISON label in the same motor vehicle with material that is marked as or known to be foodstuffs, feed or any edible material intended for consumption by humans or animals unless the poisonous material is packaged in accordance with this subchapter and is:

(i) Overpacked in a metal drum as specified in §173.25(c) of this subchapter; or

(ii) Loaded into a closed unit load device and the foodstuffs, feed, or other edible material are loaded into another closed unit load device;

(2) Bearing or required to bear a POISON or POISON GAS label in the driver's compartment (including a sleeper berth) of a motor vehicle; or

(3) Bearing a KEEP AWAY FROM FOOD label with materials marked as or known to be foodstuffs, feed, or any other edible material intended for consumption by humans or animals unless the package bearing the KEEP AWAY FROM FOOD label is separated in a manner that, in the event of leakage from packages under conditions normally incident to transportation, commingling of hazardous materials with foodstuffs, feed, or any other edible material would not occur.

[29 FR 18795, Dec. 29, 1964. Redesignated at 32 FR 5606, Apr. 5, 1967]

EDITORIAL NOTE: For FEDERAL REGISTER citations affecting §177.841, see the List of CFR Sections Affected appearing in the Finding Aids section of this volume.

EFFECTIVE DATE NOTE: By Amdt. 177–89, 62 FR 1236, Jan. 8, 1997, in §177.841, paragraphs (e)(1) and (e)(2) were revised, effective Oct. 1, 1997. At 63 FR 39398, July 22, 1997 the effective date was delayed until Oct. 1, 1998. For the convenience of the user the revised text is set forth as follows:

§ 177.841 Division 6.1 (poisonous) and Division 2.3 (poisonous gas) materials.

* * * * *

(e) * * * * *

(1) Bearing or required to bear a POISON or POISON INHALATION HAZARD label in the same motor vehicle with material that is marked as or known to be a foodstuffs, feed or edible material intended for consumption by humans or animals unless the poisonous material is packaged in accordance with this subchapter and is:

(i) Overpacked in a metal drum as specified in § 173.25(c) of this subchapter; or

(ii) Loaded into a closed unit load device and the foodstuffs, feed, or other edible material are loaded into another closed unit load device;

(2) Bearing or required to bear a POISON, POISON GAS or POISON INHALATION HAZARD label in the driver's compartment (including a sleeper berth) of a motor vehicle; or

* * * * *

§ 177.842 Class 7 (radioactive) material.

(a) The number of packages of Class 7 (radioactive) materials in any transport vehicle or storage location must be limited so that the total transport index number does not exceed 50. The total transport index of a group of packages and overpacks is determined by adding together the transport index number on the labels on the individual packages and overpacks in the group. This provision does not apply to exclusive use shipments described in §§ 173.441(b), 173.457, and 173.427 of this subchapter.

(b) Packages of Class 7 (radioactive) material bearing ''RADIOACTIVE YELLOW–II'' or ''RADIOACTIVE YELLOW–III'' labels may not be placed in a transport vehicle, storage location or in any other place closer than the distances shown in the following table to any area which may be continuously occupied by any passenger, employee, or animal, nor closer than the distances shown in the table to any package containing undeveloped film (if so marked), and must conform to the following conditions:

(1) If more than one of these packages is present, the distance must be computed from the following table on the basis of the total transport index number determined by adding together the transport index number on the labels on the individual packages and overpacks in the vehicle or storeroom.

(2) Where more than one group of packages is present in any single storage location, a single group may not have a total transport index greater than 50. Each group of packages must be handled and stowed not closer than 6 meters (20 feet) (measured edge to edge) to any other group. The following table is to be used in accordance with the provisions of paragraph (b) of this section:

Total transport index	Minimum separation distance in meters (feet) to nearest undeveloped film in various times of transit					Minimum distance in meters (feet) to area of persons, or minimum distance in meters (feet) from dividing partition of cargo compartments
	Up to 2 hours	2–4 hours	4–8 hours	8–12 hours	Over 12 hours	
None	0.0 (0)	0.0 (0)	0.0 (0)	0.0 (0)	0.0 (0)	0.0 (0)
0.1 to 1.0	0.3 (1)	0.6 (2)	0.9 (3)	1.2 (4)	1.5 (5)	0.3 (1)
1.1 to 5.0	0.9 (3)	1.2 (4)	1.8 (6)	2.4 (8)	3.4 (11)	0.6 (2)
5.1 to 10.0	1.2 (4)	1.8 (6)	2.7 (9)	3.4 (11)	4.6 (15)	0.9 (3)
10.1 to 20.0	1.5 (5)	2.4 (8)	3.7 (12)	4.9 (16)	6.7 (22)	1.2 (4)
20.1 to 30.0	2.1 (7)	3.0 (10)	4.6 (15)	6.1 (20)	8.8 (29)	1.5 (5)
30.1 to 40.0	2.4 (8)	3.4 (11)	5.2 (17)	6.7 (22)	10.1 (33)	1.8 (6)
40.1 to 50.0	2.7 (9)	3.7 (12)	5.8 (19)	7.3 (24)	11.0 (36)	2.1 (7)

Note: The distance in this table must be measured from the nearest point on the nearest packages of Class 7 (radioactive) material.

(c) Shipments of low specific activity materials and surface contaminated objects, as defined in §173.403 of this subchapter, must be loaded so as to avoid spillage and scattering of loose materials. Loading restrictions are set forth in §173.427 of this subchapter.

(d) Packages must be so blocked and braced that they cannot change position during conditions normally incident to transportation.

(e) Persons should not remain unnecessarily in a vehicle containing Class 7 (radioactive) materials.

(f) Each fissile material, controlled shipment (as defined in §173.403 of this subchapter) must be transported in accordance with one of the methods prescribed in §173.457 of this subchapter. The transport controls must be adequate to assure that no fissile material, controlled shipment is transported in the same transport vehicle with any other fissile Class 7 (radioactive) material shipment. In loading and storage areas each fissile material, controlled shipment must be segregated by a distance of at least 6 meters (20 feet) from any other package required to bear one of the ''Radioactive'' labels described in §172.403 of this subchapter.

(g) For shipments transported under exclusive use conditions the radiation dose rate may not exceed 0.02 mSv per hour (2 mrem per hour) in any position normally occupied in the motor vehicle. For shipments transported as exclusive use under the provisions of §173.441(b) of this subchapter for packages with external radiation levels in excess of 2 mSv (200 mrem per hour) at the package surface, the motor vehicle must meet the requirements of a closed transport vehicle (§173.403 of this subchapter). The total transport index for packages containing fissile material may not exceed 100.

[Amdt. 177–85, 60 FR 50334, Sept. 28, 1995]

§177.843 Contamination of vehicles.

(a) Each motor vehicle used for transporting Class 7 (radioactive) materials under exclusive use conditions in accordance with §173.427(b)(3) or (c) or §173.443(c) of this subchapter must be surveyed with radiation detection instruments after each use. A vehicle may not be returned to service until the radiation dose rate at every accessible surface is 0.005 mSv per hour (0.5 mrem per hour) or less and the removable (non-fixed) radioactive surface contamination is not greater than the level prescribed in §173.443(a) of this subchapter.

(b) This section does not apply to any vehicle used solely for transporting Class 7 (radioactive) material if a survey of the interior surface shows that the radiation dose rate does not exceed 0.1 mSv per hour (10 mrem per hour) at the interior surface or 0.02 mSv per hour (2 mrem per hour) at 1 meter (3.3 feet) from any interior surface. These vehicles must be stenciled with the words ''For Radioactive Materials Use Only'' in lettering at least 7.6 centimeters (3 inches) high in a conspicuous place, on both sides of the exterior of the vehicle. These vehicles must be kept closed at all times other than loading and unloading.

(c) In case of fire, accident, breakage, or unusual delay involving shipments of Class 7 (radioactive) material, see §177.861.

[Amdt. 177–3, 33 FR 14933, Oct. 4, 1968, as amended by Amdt. 177–35, 41 FR 16131, Apr. 15, 1976; Amdt. 177–57, 48 FR 10247, Mar. 10, 1983; Amdt. 177–78, 55 FR 52712, Dec. 21, 1990; Amdt. 177–85, 60 FR 50335, Sept. 28, 1995]

Subpart C—Segregation and Separation Chart of Hazardous Materials

§177.848 Segregation of hazardous materials.

(a) This section applies to materials which meet one or more of the hazard classes defined in this subchapter and are:

(1) In packages which require labels in accordance with part 172 of this subchapter;

(2) In a compartment within a multi-compartmented cargo tank subject to the restrictions in §173.33 of this subchapter; or

(3) In a portable tank loaded in a transport vehicle or freight container.

(b) When a transport vehicle is to be transported by vessel, other than a ferry vessel, hazardous materials on or within that vehicle must be stowed and segregated in accordance with §176.83(b) of this subchapter.

(c) In addition to the provisions of paragraph (d) of this section, cyanides or cyanide mixtures may not be loaded or stored with acids.

(d) Hazardous materials may not be loaded, transported, or stored together, except as provided in this section, and in accordance with the following Table:

SEGREGATION TABLE FOR HAZARDOUS MATERIALS

Class or division		Notes	1.1 1.2	1.3	1.4	1.5	1.6	2.1	2.2	2.3 gas zone A	2.3 gas Zone B	3	4.1	4.2	4.3	5.1	5.2	6.1 liquids PG I zone A	7	8 liquids only
Explosives	1.1 and 1.2	A	*	*	*	*	*	X	X	X	X	X	X	X	X	X	X	X	X	X
Explosives	1.3		*	*	*	*	*	X		X	X	X		X	X	X	X	X		X
Explosives	1.4		*	*	*	*	*	O		O	O	O		O				O		O
Very insensitive explosives.	1.5	A	*	*	*	*	*	X	X	X	X	X	X	X	X	X	X	X	X	X
Extremely insensitive explosives.	1.6		*	*	*	*	*													
Flammable gases	2.1		X	X	O	X				X	O							O	O	
Non-toxic, non-flammable gases.	2.2		X			X														
Poisonous gas Zone A	2.3		X	X	O	X		X				X	X	X	X	X	X			X
Poisonous gas Zone B	2.3		X	X	O	X		O				O	O	O	O	O	O			O
Flammable liquids	3		X	X	O	X				X	O					O		X		
Flammable solids	4.1		X			X				X	O							X		O
Spontaneously combustible materials.	4.2		X	X	O	X				X	O							X		X
Dangerous when wet materials.	4.3		X	X		X				X	O							X		O
Oxidizers	5.1	A	X	X		X				X	O	O						X		O
Organic peroxides	5.2		X	X		X				X	O							X		O
Poisonous liquids PG I Zone A.	6.1		X	X	O	X		O				X	X	X	X	X	X			X
Radioactive materials	7		X			X		O												
Corrosive liquids	8		X	X	O	X				X	O		O	X	O	O	O	X		

(e) lnstructions for using the segregation table for hazardous materials are as follows:

(1) The absence of any hazard class or division or a blank space in the Table indicates that no restrictions apply.

(2) The letter ''X'' in the Table indicates that these materials may not be loaded, transported, or stored together in the same transport vehicle or storage facility during the course of transportation.

(3) The letter ''O'' in the Table indicates that these materials may not be loaded, transported, or stored together in the same transport vehicle or storage facility during the course of transportation unless separated in a manner that, in the event of leakage from packages under conditions normally incident to transportation, commingling of hazardous materials would not occur. Notwithstanding the methods of separation employed, Class 8 (corrosive) liquids may not be loaded above or adjacent to Class 4 (flammable) or Class 5 (oxidizing) materials; except that shippers may load truckload shipments of such materials together when it is known that the mixture of contents would not cause a fire or a dangerous evolution of heat or gas.

(4) The ''*'' in the Table indicates that segregation among different Class 1 (explosive) materials is governed by the compatibility table in paragraph (f) of this section.

(5) The note ''A'' in the second column of the Table means that, notwithstanding the requirements of the letter ''X'', ammonium nitrate (UN 1942) and ammonium nitrate fertilizer may be loaded or stored with Division 1.1 (Class A explosive) or Division 1.5 (blasting agents) materials.

(6) When the § 172.101 Table or § 172.402 of this subchapter requires a package to bear a subsidiary hazard label, segregation appropriate to the subsidiary hazard must be applied when that segregation is more restrictive than that required by the primary hazard. However, hazardous materials of the same class may be stowed together without regard to segregation required for any secondary hazard if the materials are not capable of reacting dangerously with each other and causing combustion or dangerous evolution of heat, evolution of flammable, poisonous, or asphyxiant gases, or formation of corrosive or unstable materials.

(f) Class 1 (explosive) materials shall not be loaded, transported, or stored together, except as provided in this section, and in accordance with the following Table:

COMPATIBILITY TABLE FOR CLASS 1 (EXPLOSIVE) MATERIALS

Compatibility group	A	B	C	D	E	F	G	H	J	K	L	N	S
A		X	X	X	X	X	X	X	X	X	X	X	X
B	X		X	4	X	X	X	X	X	X	X	X	4/5
C	X	X		2	2	X	X	X	X	X	X	3	4/5
D	X	4	2		2	X	X	X	X	X	X	3	4/5
E	X	X	2	2		X	X	X	X	X	X	3	4/5
F	X	X	X	X	X		X	X	X	X	X	X	4/5
G	X	X	X	X	X	X		X	X	X	X	X	4/5
H	X	X	X	X	X	X	X		X	X	X	X	4/5
J	X	X	X	X	X	X	X	X		X	X	X	4/5
K	X	X	X	X	X	X	X	X	X		X	X	4/5
L	X	X	X	X	X	X	X	X	X	X	1	X	X
N	X	X	3	3	3	X	X	X	X	X	X		4/5
S	X	4/5	4/5	4/5	4/5	4/5	4/5	4/5	4/5	4/5	X	4/5	

(g) Instructions for using the compatibility table for Class 1 (explosive) materials are as follows:

(1) A blank space in the Table indicates that no restrictions apply.

(2) The letter ''X'' in the Table indicates that explosives of different compatibility groups may not be carried on the same transport vehicle.

(3) The numbers in the Table mean the following:

(i) ''1'' means an explosive from compatibility group L shall only be carried on the same transport vehicle with an identical explosive.

(ii) ''2'' means any combination of explosives from compatibility groups C, D, or E is assigned to compatibility group E.

(iii) ''3'' means any combination of explosives from compatibility groups C, D, or E with those in compatibility group N is assigned to compatibility group D.

(iv) ''4'' means § 177.835(g) when transporting detonators.

(v) ''5'' means Division 1.4S fireworks may not be loaded on the same transport vehicle with Division 1.1 or 1.2 (Class A explosive) materials.

(h) Except as provided in paragraph (i) of this section, explosives of the same compatibility group but of different divisions may be transported together provided that the whole shipment is transported as though its entire contents were of the lower numerical division (i.e., Division 1.1 being lower than Division 1.2). For example, a mixed shipment of Division 1.2 (Class A explosive) materials and Division 1.4 (Class C explosive) materials, both of compatibility group D, must be transported as Division 1.2 (Class A explosive) materials.

(i) When Division 1.5 (blasting agent) materials, compatibility group D, are transported in the same freight container as Division 1.2 (Class A explosive) materials, compatibility group D, the shipment must be transported as Division 1.1 (Class A explosive) materials, compatibility group D.

[Amdt. 177–78, 55 FR 52712, Dec. 21, 1990, as amended at 56 FR 66283, Dec. 20, 1991; 57 FR 45465, Oct. 1, 1992; 57 FR 47513, Oct. 16, 1992; Amdt. 177–78, 57 FR 59310, Dec. 15, 1992; Amdt. 177–82, 58 FR 50237, Sept. 24, 1993; Amdt. 177–83, 59 FR 49134, Sept. 26, 1994; Amdt. 177–87, 61 FR 27175, May 30, 1996]

Subpart D—Vehicles and Shipments in Transit; Accidents

§ 177.854 Disabled vehicles and broken or leaking packages; repairs.

(See also Forbidden articles, § 177.821).

(a) *Care of lading, hazardous materials.* Whenever for any cause other than necessary traffic stops any motor vehicle transporting any hazardous material is stopped upon the traveled portion of any highway or shoulder thereof, special care shall be taken to guard the vehicle and its load or to take such steps as may be necessary to provide against hazard. Special effort shall be made to remove the motor vehicle to a place where the hazards of the materials being transported may be provided against. See §§ 392.22, 392.24, and 392.25 of this title for warning devices required to be displayed on the highway.

(b) *Disposition of containers found broken or leaking in transit.* When leaks occur in packages or containers during the course of transportation, subsequent to initial loading, disposition of such package or container shall be made by the safest practical means afforded under paragraphs (c), (d), and (e) of this section.

(c) *Repairing or overpacking packages.* (1) Packages may be repaired when safe and practicable, such repairing to be in accordance with the best and safest practice known and available.

(2) Packages of hazardous materials that are damaged or found leaking during transportation, and hazardous materials that have spilled or leaked during transportation, may be forwarded to destination or returned to the shipper in a salvage drum in accordance with the requirements of § 173.3(c) of this subchapter.

(d) *Transportation of repaired packages.* Any package repaired in accordance with the requirements of paragraph (c)(1) of this section, except as provided in §§ 177.855(c), 177.856(c), and 177.858(b), may be transported to the nearest place at which it may safely be disposed of only in compliance with the following requirements:

(1) The package must be safe for transportation.

(2) The repair of the package must be adequate to prevent contamination of or hazardous admixture with other lading transported on the same motor vehicle therewith.

(3) If the carrier is not himself the shipper, the consignee's name and address must be plainly marked on the repaired package.

(e) *Disposition of unsafe broken packages.* In the event any leaking package or container cannot be safely and adequately repaired for transportation or transported, it shall be stored pending proper disposition in the safest and most expeditious manner possible.

(f) *Stopped vehicles; other dangerous articles.* Whenever any motor vehicle transporting Class 3 (flammable liquid), Class 4 (flammable solid), Class 5 (oxidizing), Class 8 (corrosive), Class 2 (gases), or Division 6.1 (poisonous) materials, is stopped for any cause other than necessary traffic stops upon the traveled portion of any highway, or a shoulder next thereto, the following requirements shall be complied with during the period of such stop:

(1) For motor vehicles other than cargo tanks used for the transportation of Class 3 (flammable liquid) or Division 2.1 (flammable gas) materials and not transporting Division 1.1, 1.2, or 1.3 (Class A or B explosive) materials, warning devices must be set out in the manner prescribed by §392.22 of this title.

(2) For cargo tanks used for the transportation of Class 3 (flammable liquid) or Division 2.1 (flammable gas) materials, whether loaded or empty, and vehicles transporting Division 1.1, 1.2, or 1.3 (explosive) materials, warning devices must be set out in the manner prescribed by §392.25 of this title.

(g) *Repair and maintenance of vehicles containing certain hazardous materials*—(1) *General.* No person may use heat, flame or spark producing devices to repair or maintain the cargo or fuel containment system of a motor vehicle required to be placarded, other than COMBUSTIBLE, in accordance with subpart F of part 172 of this subchapter. As used in this section, ''containment system'' includes all vehicle components intended physically to contain cargo or fuel during loading or filling, transport, or unloading.

(2) *Repair and maintenance inside a building.* No person may perform repair or maintenance on a motor vehicle subject to paragraph (g)(1) of this section inside a building unless:

(i) The motor vehicle's cargo and fuel containment systems are closed (except as necessary to maintain or repair the vehicle's motor) and do not show any indication of leakage;

(ii) A means is provided, and a person capable to operate the motor vehicle is available, to immediately remove the motor vehicle if necessary in an emergency;

(iii) The motor vehicle is removed from the enclosed area upon completion of repair or maintenance work; and

(iv) For motor vehicles loaded with Division 1.1, 1.2, or 1.3 (Class A or B explosive), Class 3 (flammable liquid), or Division 2.1 (flammable gas) materials, all sources of spark, flame or glowing heat within the area of enclosure (including any heating system drawing air therefrom) are extinguished, made inoperable or rendered explosion-proof by a suitable method. *Exception:* Electrical equipment on the vehicle, necessary to accomplish the maintenance function, may remain operational.

(h) *No repair with flame unless gas-free.* No repair of a cargo tank used for the transportation of any Class 3 (flammable liquid) or Division 6.1 (poisonous liquid) material, or any compartment thereof, or of any container for fuel of whatever nature, may be repaired by any method employing a flame, arc, or other means of welding, unless the tank or compartment shall first have been made gas-free.

[29 FR 18795, Dec. 29, 1964. Redesignated at 32 FR 5606, Apr. 5, 1967]

EDITORIAL NOTE: For FEDERAL REGISTER citations affecting §177.854, see the List of CFR Sections Affected appearing in the Finding Aids section of this volume.

Subpart E—Regulations Applying to Hazardous Material on Motor Vehicles Carrying Passengers for Hire

§ 177.870 Regulations for passenger carrying vehicles.

(a) *Vehicles transporting passengers and property.* In addition to the regulations in parts 170–189 of this subchapter the following requirements shall apply to vehicles transporting passengers and property.

(b) *No Class 1 (explosive) materials or other hazardous materials on passenger-carrying vehicles, exceptions.* No hazardous materials except small-arms ammunition, emergency shipments of drugs, chemicals and hospital supplies, and the accompanying munitions of war of the Departments of the Army, Navy, and Air Force of the United States Government, are authorized by parts 170–189 of this subchapter to be transported on motor vehicles carrying passengers for hire where other practicable means of transportation is available.

(c) *Class 1 (explosive) materials in passenger-carrying space forbidden.* No Class 1 (explosive) material, except small-arms ammunition, may be carried in the passenger-carrying space of any motor vehicle transporting passengers for hire.

(d) *Hazardous materials on passenger carrying vehicles; quantity.* Where no other practicable means of transportation is available the following articles in the quantities as shown may be transported in motor vehicles carrying passengers for hire in a space other than that provided for passengers: Not to exceed 45 kg (99 pounds) gross weight of any or all of the kinds of Class 1 (explosive) materials permitted to be transported by passenger-carrying aircraft or rail car may be transported on a motor vehicle transporting passengers: *Provided, however,* That samples of Class 1 (explosive) materials for laboratory examination, not to exceed two samples, or a total of no more than 100 detonators, Division 1.4 (Class C explosive) materials at one time in a single motor vehicle, may be transported in a motor vehicle transporting passengers.

(e) *Articles other than Class 1 (explosive) materials on passenger-carrying vehicles.* The gross weight of any given class of hazardous material other than Class 1 (explosive) materials shall not exceed 45 kg (99 pounds), and the aggregate weight of all such other dangerous articles shall not exceed 225 kg (496 pounds). This provision does not apply to nontoxic, nonflammable refrigerants, when such refrigerant is for servicing operations of a motor carrier on whose motor vehicles the refrigerant is used. A cylinder secured against movement while in transit and not exceeding 113 kg (250 pounds) gross weight may be transported.

(f) *Division 6.1 (poisonous) or Division 2.3 (poisonous gas) materials on passenger-carrying vehicles.* No motor carrier may transport any extremely dangerous Division 6.1 (poisonous) or Division 2.3 (poisonous gas) material, or any paranitroaniline, in any amount, in or on any bus while engaged in the transportation of passengers; or any less dangerous Division 6.1 (poisonous) material, which is other than a liquid, in any amount exceeding an aggregate of 45 kg (99 pounds) gross weight in or on any such bus.

(g) *Class 7 (radioactive) materials.* In addition to the limitations prescribed in paragraphs (b) and (e) of this section, no person may transport any Class 7 (radioactive) material requiring labels under §§ 172.436, 172.438, and 172.440 of this subchapter in or on any motor vehicle carrying passengers for hire except where no other practicable means of transportation is available. Packages of Class 7 (radioactive) materials must be stored only in the trunk or baggage compartment of the vehicle, and must not be stored in any compartment occupied by persons. Packages of Class 7 (radioactive) materials must be handled and placed in the vehicle as prescribed in § 177.842.

[29 FR 18795, Dec. 29, 1964. Redesignated at 32 FR 5606, Apr. 5, 1967]

EDITORIAL NOTE: For FEDERAL REGISTER citations affecting § 177.870 see the List of CFR Sections Affected appearing in the Finding Aids section of this volume.

PART 178—SPECIFICATIONS FOR PACKAGINGS

Sec.
178.1 Purpose and scope.
178.2 Applicability and responsibility.
178.3 Marking of packagings.

Subpart A—[Reserved]

Subpart B—Specifications for Inside Containers, and Linings

178.33 Specification 2P; inner nonrefillable metal receptacles.
178.33–1 Compliance.
178.33–2 Type and size.
178.33–3 Inspection.
178.33–4 Duties of inspector.
178.33–5 Material.
178.33–6 Manufacture.
178.33–7 Wall thickness.
178.33–8 Tests.
178.33–9 Marking.
178.33a Specification 2Q; inner nonrefillable metal receptacles.
178.33a–1 Compliance.
178.33a–2 Type and size.
178.33a–3 Inspection.
178.33a–4 Duties of inspector.
178.33a–5 Material.
178.33a–6 Manufacture.
178.33a–7 Wall thickness.
178.33a–8 Tests.
178.33a–9 Marking.

Subpart C—Specifications for Cylinders

178.35 General requirements for specification cylinders.
178.36 Specification 3A and 3AX seamless steel cylinders.
178.37 Specification 3AA and 3AAX seamless steel cylinders.
178.38 Specification 3B seamless steel cylinders.
178.39 Specification 3BN seamless nickel cylinders.
178.42 Specification 3E seamless steel cylinders.
178.44 Specification 3HT seamless steel cylinders for aircraft use.
178.45 Specification 3T seamless steel cylinders.
178.46 Specification 3AL seamless aluminum cylinders.
178.47 Specification 4DS welded stainless steel cylinders for aircraft use.
178.50 Specification 4B welded or brazed steel cylinders.
178.51 Specification 4BA welded or brazed steel cylinders.
178.53 Specification 4D welded steel cylinders for aircraft use.
178.55 Specification 4B240ET welded or brazed cylinders.
178.56 Specification 4AA480 welded steel cylinders.
178.57 Specification 4L welded insulated cylinders.
178.58 Specification 4DA welded steel cylinders for aircraft use.
178.59 Specification 8 steel cylinders with porous fillings for acetylene.
178.60 Specification 8AL steel cylinders with porous fillings for acetylene.
178.61 Specification 4BW welded steel cylinders with electric-arc welded longitudinal seam.
178.65 Specification 39 non-reusable (non-refillable) cylinders.
178.68 Specification 4E welded aluminum cylinders.

Subparts D—G [Reserved]

Subpart H—Specifications for Portable Tanks

178.245 Specification 51; steel portable tanks.
178.245–1 Requirements for design and construction.
178.245–2 Material.
178.245–3 Design pressure.
178.245–4 Tank mountings.
178.245–5 Protection of valves and accessories.
178.245–6 Name plate.
178.245–7 Report.
178.251—178.253–5 [Reserved]
178.255 Specification 60; steel portable tanks.
178.255–1 General requirements.
178.255–2 Material.
178.255–3 Expansion domes.
178.255–4 Closures for manholes and domes.
178.255–5 Bottom discharge outlets.
178.255–6 Loading and unloading accessories.
178.255–7 Protection of valves and accessories.
178.255–8 Safety devices.
178.255–9 Compartments.
178.255–10 Lining.
178.255–11 Tank mountings.
178.255–12 Pressure test.
178.255–13 Repair of tanks.
178.255–14 Marking.
178.255–15 Report.
178.270 Specification IM 101 and IM 102 steel portable tanks; general design and construction requirements.
178.270–1 Specification requirements for IM 101 and IM 102 steel portable tanks.
178.270–2 General.

178.270–3 Materials of construction.
178.270–4 Structural integrity.
178.270–5 Minimum thickness of shells and heads.
178.270–6 Tank supports, frameworks and lifting attachments.
178.270–7 Joints in tank shells.
178.270–8 Protection of valves and accessories.
178.270–9 Inspection openings.
178.270–10 External design pressure.
178.270–11 Pressure and vacuum relief devices.
178.270–12 Valves, nozzles, piping, and gauging devices.
178.270–13 Testing.
178.270–14 Marking of tanks.
178.271 Specification IM 101 steel portable tanks.
178.271–1 General requirements.
178.272 Specification IM 102 steel portable tanks.
178.272–1 General requirements.
178.272–2 Minimum thickness of shells and heads.

Subpart I—[Reserved]

Subpart J—Specifications for Containers for Motor Vehicle Transportation

178.318 Specification MC 201; container for detonators and percussion caps.
178.318–1 Scope.
178.318–2 Container.
178.318–3 Marking.
178.320 General requirements applicable to all DOT specification cargo tank motor vehicles.
178.337 Specification MC 331; cargo tank motor vehicle primarily for transportation of compressed gases as defined in subpart G of part 173 of this subchapter.
178.337–1 General requirements.
178.337–2 Material.
178.337–3 Structural integrity.
178.337–4 Joints.
178.337–5 Bulkheads, baffles and ring stiffeners.
178.337–6 Closure for manhole.
178.337–7 Overturn protection.
178.337–8 Outlets.
178.337–9 Pressure relief devices, piping, valves, hoses, and fittings.
178.337–10 Protection of fittings.
178.337–11 Emergency discharge control.
178.337–12 Shear section.
178.337–13 Supporting and anchoring.
178.337–14 Gauging devices.
178.337–15 Pumps and compressors.
178.337–16 Testing.
178.337–17 Marking.
178.337–18 Certification.
178.338 Specification MC–338; insulated cargo tank.
178.338–1 General requirements.
178.338–2 Material.
178.338–3 Structural integrity.
178.338–4 Joints.
178.338–5 Stiffening rings.
178.338–6 Manholes.
178.338–7 Openings.
178.338–8 Pressure relief devices, piping, valves, and fittings.
178.338–9 Holding time.
178.338–10 Collision damage protection.
178.338–11 Discharge control devices.
178.338–12 Shear section.
178.338–13 Supports and anchoring.
178.338–14 Gauging devices.
178.338–15 Cleanliness.
178.338–16 Inspection and testing.
178.338–17 Pumps and compressors.
178.338–18 Marking.
178.338–19 Certification.
178.340—178.343 [Reserved]
178.345 General design and construction requirements applicable to Specification DOT 406 (§ 178.346), DOT 407 (§ 178.347), and DOT 412 (§ 178.348) cargo tank motor vehicles.
178.345–1 General requirements.
178.345–2 Material and material thickness.
178.345–3 Structural integrity.
178.345–4 Joints.
178.345–5 Manhole assemblies.
178.345–6 Supports and anchoring.
178.345–7 Circumferential reinforcements.
178.345–8 Accident damage protection.
178.345–9 Pumps, piping, hoses and connections.
178.345–10 Pressure relief.
178.345–11 Tank outlets.
178.345–12 Gauging devices.
178.345–13 Pressure and leakage tests.
178.345–14 Marking.
178.345–15 Certification.
178.346 Specification DOT 406; cargo tank motor vehicle.
178.346–1 General requirements.
178.346–2 Material and thickness of material.
178.346–3 Pressure relief.
178.346–4 Outlets.
178.346–5 Pressure and leakage tests.
178.347 Specification DOT 407; cargo tank motor vehicle.
178.347–1 General requirements.
178.347–2 Material and thickness of material.
178.347–3 Manhole assemblies.
178.347–4 Pressure relief.
178.347–5 Pressure and leakage test.
178.348 Specification DOT 412; cargo tank motor vehicle.
178.348–1 General requirements.
178.348–2 Material and thickness of material.
178.348–3 Pumps, piping, hoses and connections.
178.348–4 Pressure relief.
178.348–5 Pressure and leakage test.

Subpart K—Specifications for Packagings for Class 7 (Radioactive) Materials

178.350 Specification 7A; general packaging, Type A.
178.352 Specification 6L; metal packaging.
178.352–1 General requirements.
178.352–2 Rated capacity.
178.352–3 General construction requirements.
178.352–4 Welding.
178.352–5 Closure.
178.352–6 Markings.
178.354 Specification 6M; metal packaging.
178.354–1 General requirements.
178.354–2 Rated capacity.
178.354–3 General construction requirements.
178.354–4 Closure.
178.354–5 Markings.
178.356 Specification 20PF phenolic-foam insulated, metal overpack.
178.356–1 General requirements.
178.356–2 Materials of construction and other requirements.
178.356–3 Tests.
178.356–4 Required markings.
178.356–5 Typical assembly detail.
178.358 Specification 21PF fire and shock resistant, phenolic-foam insulated, metal overpack.
178.358–1 General requirements.
178.358–2 Materials of construction and other requirements.
178.358–3 Modification of Specification 21PF–1 overpacks.
178.358–4 Construction of Specification 21PF–1B overpacks.
178.358–5 Required markings.
178.358–6 Typical assembly detail.
178.360 Specification 2R; inside containment vessel.
178.360–1 General requirements.
178.360–2 Manufacture.
178.360–3 Dimensions.
178.360–4 Closure devices.
178.362 Specification 20WC wooden protective jacket.
178.362–1 General requirements.
178.362–2 Materials of construction.
178.362–3 Closure.
178.362–4 Tests.
178.362–5 Painting.
178.362–6 Marking.
178.362–7 Typical assembly sketches.
178.364 Specification 21WC wooden-steel protective overpack.
178.364–1 General requirements.
178.364–2 Materials of construction and other requirements.
178.364–3 Closure.
178.364–4 Tests.
178.364–5 Required marking.
178.364–6 Typical assembly detail.

Subpart L—Non-bulk Performance-oriented Packaging Standards

Sec.
178.500 Purpose, scope and definitions.
178.502 Identification codes for packagings.
178.503 Marking of packagings.
178.504 Standards for steel drums.
178.505 Standards for aluminum drums.
178.506 Standards for metal drums other than steel or aluminum.
178.507 Standards for plywood drums.
178.508 Standards for fiber drums.
178.509 Standards for plastic drums and jerricans.
178.510 Standards for wooden barrels.
178.511 Standards for aluminum and steel jerricans.
178.512 Standards for steel or aluminum boxes.
178.513 Standards for boxes of natural wood.
178.514 Standards for plywood boxes.
178.515 Standards for reconstituted wood boxes.
178.516 Standards for fiberboard boxes.
178.517 Standards for plastic boxes.
178.518 Standards for woven plastic bags.
178.519 Standards for plastic film bags.
178.520 Standards for textile bags.
178.521 Standards for paper bags.
178.522 Standards for composite packagings with inner plastic receptacles.
178.523 Standards for composite packagings with inner glass, porcelain, or stoneware receptacles.

Subpart M—Testing of Non-bulk Packagings and Packages

178.600 Purpose and scope.
178.601 General requirements.
178.602 Preparation of packagings and packages for testing.
178.603 Drop test.
178.604 Leakproofness test.
178.605 Hydrostatic pressure test.
178.606 Stacking test.
178.607 Cooperage test for bung-type wooden barrels.
178.608 Vibration standard.
178.609 Test requirements for packagings for infectious substances (etiologic agents).

Subpart N—Intermediate Bulk Container Performance-Oriented Standards

178.700 Purpose, scope and definitions.
178.702 Intermediate bulk container identification codes.
178.703 Marking of intermediate bulk containers.
178.704 General intermediate bulk container standards.
178.705 Standards for metal intermediate bulk containers.
178.706 Standards for rigid plastic intermediate bulk containers.

178.707 Standards for composite intermediate bulk containers.
178.708 Standards for fiberboard intermediate bulk containers.
178.709 Standards for wooden intermediate bulk containers.
178.710 Standards for flexible intermediate bulk containers.

Subpart O—Testing of Intermediate Bulk Containers

178.800 Purpose and scope.
178.801 General requirements.
178.802 Preparation of fiberboard intermediate bulk containers for testing.
178.803 Testing and certification of intermediate bulk containers.
178.810 Drop test.
178.811 Bottom lift test.
178.812 Top lift test.
178.813 Leakproofness test.
178.814 Hydrostatic pressure test.
178.815 Stacking test.
178.816 Topple test.
178.817 Righting test.
178.818 Tear test.
178.819 Vibration test.

APPENDIX A TO PART 178—SPECIFICATIONS FOR STEEL
APPENDIX B TO PART 178—ALTERNATIVE LEAKPROOFNESS TEST METHODS
APPENDIX C TO PART 178—NOMINAL AND MINIMUM THICKNESSES OF STEEL DRUMS AND JERRICANS

AUTHORITY: 49 U.S.C. 5101–5127; 49 CFR 1.53.

§ 178.1 Purpose and scope.

This part prescribes the manufacturing and testing specifications for packaging and containers used for the transportation of hazardous materials in commerce.

[Amdt. 178–40, 42 FR 2689, Jan. 13, 1977. Redesignated by Amdt. 178–97, 55 FR 52715, Dec. 21, 1990]

§ 178.2 Applicability and responsibility.

(a) *Applicability*. (1) The requirements of this part apply to packagings manufactured—

(i) To a DOT specification, regardless of country of manufacture; or

(ii) To a UN standard, for packagings manufactured within the United States. For UN standard packagings manufactured outside the United States, see § 173.24(d)(2) of this subchapter. For UN standard packagings for which standards are not prescribed in this part, see § 178.3(b).

(2) A manufacturer of a packaging subject to the requirements of this part is primarily responsible for compliance with the requirements of this part. However, any person who performs a function prescribed in this part shall perform that function in accordance with this part.

(b) *Specification markings.* When this part requires that a packaging be marked with a DOT specification or UN standard marking, marking of the packaging with the appropriate DOT or UN markings is the certification that—

(1) Except as otherwise provided in this section, all requirements of the DOT specification or UN standard, including performance tests, are met; and

(2) All functions performed by, or on behalf of, the person whose name or symbol appears as part of the marking conform to requirements specified in this part.

(c) *Notification.* Except as specifically provided in §§ 178.337–18 and 178.345–10 of this part, the manufacturer or other person certifying compliance with the requirements of this part, and each subsequent distributor of that packaging shall—

(1) Notify in writing each person to whom that packaging is transferred—

(i) Of all requirements in this part not met at the time of transfer, and

(ii) Of the type and dimensions of any closures, including gaskets, needed to satisfy performance test requirements.

(2) Retain copies of each written notification for at least one year from date of issuance; and

(3) Make copies of all written notifications available for inspection by a representative of the Department.

(d) Except as provided in paragraph (c) of this section, a packaging not conforming to the applicable specifications or standards in this part may not be marked to indicate such conformance.

(e) *Definitions.* For the purpose of this part—

Manufacturer means the person whose name and address or symbol appears as part of the specification markings required by this part or, for a packaging marked with the symbol of an approval agency, the person on whose behalf the

approval agency certifies the packaging.

Specification markings mean the packaging identification markings required by this part including, where applicable, the name and address or symbol of the packaging manufacturer or approval agency.

(f) No packaging may be manufactured or marked to a packaging specification that was in effect on September 30, 1991, and that was removed from this part 178 by a rule published in the FEDERAL REGISTER on December 21, 1990 and effective October 1, 1991.

[Amdt. 178–97, 55 FR 52715, Dec. 21, 1990; 56 FR 66284, Dec. 20, 1991, as amended by Amdt. No. 178–106, 59 FR 67519, Dec. 29, 1994; Amdt. 178–117, 62 FR 14338, Mar. 26, 1997]

§178.3 Marking of packagings.

(a) Each packaging represented as manufactured to a DOT specification or a UN standard must be marked with specification markings conforming to the applicable specification, and with the following:

(1) In an unobstructed area, with letters, and numerals identifying the standards or specification (e.g. UN 1A1, DOT 4B240ET, etc.).

(2) Unless otherwise specified in this part, with the name and address or symbol of the packaging manufacturer or, where specifically authorized, the symbol of the approval agency certifying compliance with a UN standard. Symbols, if used, must be registered with the Associate Administrator for Hazardous Materials Safety. Duplicative symbols are not authorized.

(3) The markings must be stamped, embossed, burned, printed or otherwise marked on the packaging to provide adequate accessibility, permanency, contrast, and legibility so as to be readily apparent and understood.

(4) Unless otherwise specified, letters and numerals must be at least 12.0 mm (0.47 inches) in height except that for packagings of less than or equal to 30 L (7.9 gallons) capacity for liquids or 30 kg (66 pounds) capacity for solids the height must be at least 6.0 mm (0.2 inches). For packagings having a capacity of 5 L (1 gallon) or 5 kg (11 pounds) or less, letters and numerals must be of an appropriate size.

(5) For packages with a gross mass of more than 30 kg (66 pounds), the markings or a duplicate thereof must appear on the top or on a side of the packaging.

(b) A UN standard packaging for which the UN standard is set forth in this part may be marked with the United Nations symbol and other specification markings only if it fully conforms to the requirements of this part. A UN standard packaging for which the UN standard is not set forth in this part may be marked with the United Nations symbol and other specification markings for that standard as provided in the ICAO Technical Instructions or Annex 1 of the IMDG Code subject to the following conditions:

(1) The U.S. manufacturer must establish that the packaging conforms to the applicable provisions of the ICAO Technical Instructions or Annex 1 of the IMDG Code, respectively.

(2) If an indication of the name of the manufacturer or other identification of the packaging as specified by the competent authority is required, the name and address or symbol of the manufacturer or the approval agency certifying compliance with the UN standard must be entered. Symbols, if used, must be registered with the Associate Administrator for Hazardous Materials Safety.

(3) The letters ''USA'' must be used to indicate the State authorizing the allocation of the specification marks if the packaging is manufactured in the United States.

(c) Where a packaging conforms to more than one UN standard or DOT specification, the packaging may bear more than one marking, provided the packaging meets all the requirements of each standard or specification. Where more than one marking appears on a packaging, each marking must appear in its entirety.

(d) No person may mark or otherwise certify a packaging or container as meeting the requirements of a manufacturing exemption unless that person is the holder of or a party to that exemption, an agent of the holder or

party for the purpose of marking or certification, or a third party tester.

[Amdt. 178–97, 55 FR 52716, Dec. 21, 1990; 56 FR 66284, Dec. 20, 1991, as amended by Amdt. No. 178–106, 59 FR 67519, Dec. 29, 1994; Amdt. 178–113, 61 FR 21102, May 9, 1996]

Subpart A—[Reserved]

Subpart B—Specifications for Inside Containers, and Linings

SOURCE: 29 FR 18823, Dec. 29, 1964, unless otherwise noted. Redesignated at 32 FR 5606, Apr. 5, 1967.

§ 178.33 Specification 2P; inner non-refillable metal receptacles.

§ 178.33–1 Compliance.

(a) Required in all details.

(b) [Reserved]

§ 178.33–2 Type and size.

(a) Single-trip inside containers. Must be seamless, or with seams, welded, soldered, brazed, double seamed, or swedged.

(b) The maximum capacity of containers in this class shall not exceed one liter (61.0 cubic inches). The maximum inside diameter shall not exceed 3 inches.

[29 FR 18813, Dec. 29, 1964, as amended by Order 71, 31 FR 9074, July 1, 1966. Redesignated at 32 FR 5606, Apr. 5, 1967, and amended by Amdt. 178–101, 58 FR 50237, Sept. 24, 1993]

§ 178.33–3 Inspection.

(a) By competent inspector.

(b) [Reserved]

§ 178.33–4 Duties of inspector.

(a) To inspect material and completed containers and witness tests, and to reject defective materials or containers.

(b) [Reserved]

§ 178.33–5 Material.

(a) Uniform quality steel plate such as black plate, electro-tin plate, hot dipped tin plate, tern plate or other commercially accepted can making plate; or nonferrous metal of uniform drawing quality.

(b) Material with seams, cracks, laminations or other injurious defects not authorized.

§ 178.33–6 Manufacture.

(a) By appliances and methods that will assure uniformity of completed containers; dirt and scale to be removed as necessary; no defect acceptable that is likely to weaken the finished container appreciably; reasonably smooth and uniform surface finish required.

(b) Seams when used must be as follows:

(1) Circumferential seams: By welding, swedging, brazing, soldering, or double seaming.

(2) Side seams: By welding, brazing, or soldering.

(c) Ends: The ends shall be of pressure design.

[29 FR 18823, Dec. 29, 1964, as amended by Order 71, 31 FR 9074, July 1, 1966. Redesignated at 32 FR 5606, Apr. 5, 1967]

§ 178.33–7 Wall thickness.

(a) The minimum wall thickness for any container shall be 0.007 inch.

(b) [Reserved]

[Order 71, 31 FR 9074, July 1, 1966. Redesignated at 32 FR 5606, Apr. 5, 1967]

§ 178.33–8 Tests.

(a) One out of each lot of 25,000 containers or less, successively produced per day shall be pressure tested to destruction and must not burst below 240 pounds per square inch gauge pressure. The container tested shall be complete with end assembled.

(b) Each such 25,000 containers or less, successively produced per day, shall constitute a lot and if the test container shall fail, the lot shall be rejected or ten additional containers may be selected at random and subjected to the test under which failure occurred. These containers shall be complete with ends assembled. Should any of the ten containers thus tested fail, the entire lot must be rejected. All containers constituting a lot shall be of like material, size, design construction, finish, and quality.

[Order 71, 31 FR 9074, July 1, 1966. Redesignated at 32 FR 5606, Apr. 5, 1967]

§178.33–9 Marking.

(a) By means of printing, lithographing, embossing, or stamping, each container must be marked to show:

(1) DOT–2P.

(2) Name or symbol of person making the mark specified in paragraph (a)(1) of this section. Symbol, if used, must be registered with the Associate Administrator for Hazardous Materials Safety.

(b) [Reserved]

[Amdt. 178–40, 41 FR 38181, Sept. 9, 1976, as amended by Amdt. 178–97, 56 FR 66287, Dec. 20, 1991]

§178.33a Specification 2Q; inner non-refillable metal receptacles.

§178.33a–1 Compliance.

(a) Required in all details.

(b) [Reserved]

[Order 71, 31 FR 9074, July 1, 1966. Redesignated at 32 FR 5606, Apr. 5, 1967]

§178.33a–2 Type and size.

(a) Single-trip inside containers. Must be seamless, or with seams welded, soldered, brazed, double seamed, or swedged.

(b) The maximum capacity of containers in this class shall not exceed one liter (61.0 cubic inches). The maximum inside diameter shall not exceed 3 inches.

[Order 71, 31 FR 9074, July 1, 1966. Redesignated at 32 FR 5606, Apr. 5, 1967, and amended by Amdt. 178–43, 42 FR 42208, Aug. 22, 1977; Amdt. 178–101, 58 FR 50237, Sept. 24, 1993]

§178.33a–3 Inspection.

(a) By competent inspector.

(b) [Reserved]

[Order 71, 31 FR 9074, July 1, 1966. Redesignated at 32 FR 5606, Apr. 5, 1967]

§178.33a–4 Duties of inspector.

(a) To inspect material and completed containers and witness tests, and to reject defective materials or containers.

(b) [Reserved]

[Order 71, 31 FR 9074, July 1, 1966. Redesignated at 32 FR 5606, Apr. 5, 1967]

§178.33a–5 Material.

(a) Uniform quality steel plate such as black plate, electrotin plate, hot dipped tinplate, ternplate or other commercially accepted can making plate; or nonferrous metal of uniform drawing quality.

(b) Material with seams, cracks, laminations or other injurious defects not authorized.

[Order 71, 31 FR 9074, July 1, 1966. Redesignated at 32 FR 5606, Apr. 5, 1967]

§178.33a–6 Manufacture.

(a) By appliances and methods that will assure uniformity of completed containers; dirt and scale to be removed as necessary; no defect acceptable that is likely to weaken the finished container appreciably; reasonably smooth and uniform surface finish required.

(b) Seams when used must be as follows:

(1) Circumferential seams. By welding, swedging, brazing, soldering, or double seaming.

(2) Side seams. By welding, brazing or soldering.

(c) Ends. The ends shall be of pressure design.

[Order 71, 31 FR 9074, July 1, 1966. Redesignated at 32 FR 5606, Apr. 5, 1967]

§178.33a–7 Wall thickness.

(a) The minimum wall thickness for any container shall be 0.008 inch.

(b) [Reserved]

[Order 71, 31 FR 9074, July 1, 1966. Redesignated at 32 FR 5606, Apr. 5, 1967]

§178.33a–8 Tests.

(a) One out of each lot of 25,000 containers or less, successively produced per day, shall be pressure tested to destruction and must not burst below 270 pounds per square inch gauge pressure. The container tested shall be complete with end assembled.

(b) Each such 25,000 containers or less, successively produced per day, shall constitute a lot and if the test container shall fail, the lot shall be rejected or ten additional containers may be selected at random and subjected to the test under which failure occurred. These containers shall be complete with ends assembled. Should any of the

ten containers thus tested fail, the entire lot must be rejected. All containers constituting a lot shall be of like material, size, design, construction, finish and quality.

[Order 71, 31 FR 9074, July 1, 1966. Redesignated at 32 FR 5606, Apr. 5, 1967]

§ 178.33a–9 Marking.

(a) By means of printing, lithographing, embossing, or stamping, each container must be marked to show:

(1) DOT–2Q.

(2) Name or symbol of person making the mark specified in paragraph (a)(1) of this section. Symbol, if used, must be registered with the Associate Administrator for Hazardous Materials Safety.

(b) [Reserved]

[Amdt. 178–40, 41 FR 38181, Sept. 9, 1976, as amended by Amdt. 178–97, 56 FR 66287, Dec. 20, 1991]

Subpart C—Specifications for Cylinders

SOURCE: Amdt. 178–114, 61 FR 25942, May 23, 1996, unless otherwise noted.

§ 178.35 General requirements for specification cylinders.

(a) *Compliance.* Compliance with the requirements of this subpart is required in all details.

(b) *Inspections and analyses.* Chemical analyses and tests as specified must be made within the United States unless otherwise approved in writing by the Associate Administrator, in accordance with § 173.300b of this subchapter. Inspections and verifications must be performed by—

(1) An independent inspection agency approved in writing by the Associate Administrator, in accordance with § 173.300a of this subchapter; or

(2) For DOT Specifications 3B, 3BN, 3E, 4B, 4BA, 4D (water capacity less than 1,100 cubic inches), 4B240ET, 4AA480, 4L, 8, 8AL, 4BW, 39 (marked service pressure 900 p.s.i.g. or lower) and 4E manufactured in the United States, a competent inspector of the manufacturer.

(c) *Duties of inspector.* The inspector shall determine that each cylinder made is in conformance with the applicable specification. Except as otherwise specified in the applicable specification, the inspector shall perform the following:

(1) Inspect all material and reject any not meeting applicable requirements. For cylinders made by the billet-piercing process, billets must be inspected and shown to be free from pipe, cracks, excessive segregation and other injurious defects after parting or, when applicable, after nick and cold break.

(2) Verify the material of construction meets the requirements of the applicable specification by—

(i) Making a chemical analysis of each heat of material;

(ii) Obtaining a certified chemical analysis from the material manufacturer for each heat of material (a ladle analysis is acceptable); or

(iii) If an analysis is not provided for each heat of material by the material manufacturer, by making a check analysis of a sample from each coil, sheet, or tube.

(3) Verify compliance of cylinders with the applicable specification by—

(i) Verifying identification of material is proper;

(ii) Inspecting the inside of the cylinder before closing in ends;

(iii) Verifying that the heat treatment is proper;

(iv) Obtaining samples for all tests and check chemical analyses;

(v) Witnessing all tests;

(vi) Verify threads by gauge;

(vii) Reporting volumetric capacity and tare weight (see report form) and minimum thickness of wall noted; and

(viii) Verifying that each cylinder is marked in accordance with the applicable specification.

(4) Furnish complete test reports required by this subpart to the maker of the cylinder and, upon request, to the purchaser. The test report must be retained by the inspector for fifteen years from the original test date of the cylinder.

(d) *Defects.* A cylinder may not be constructed of material with seams, cracks, laminations, or other injurious defects.

(e) *Safety devices.* Safety devices and protection for valves, safety devices, and other connections, if applied, must

be as required or authorized by the appropriate specification, and as required in §§173.34 and 173.301 of this subchapter.

(f) *Markings.* Markings on a DOT Specification cylinder must conform to applicable requirements.

(1) Each cylinder must be marked with the following information:

(i) The DOT specification marking must appear first, followed immediately by the service pressure. For example, DOT–3A1800.

(ii) The serial number must be placed just below or immediately following the DOT specification marking.

(iii) A symbol (letters) must be placed just below, immediately before or following the serial number. Other variations in sequence of markings are authorized only when necessitated by a lack of space. The symbol and numbers must be those of the manufacturer. The symbol must be registered with the Associate Administrator; duplications are not authorized.

(iv) The inspector's official mark and date of test (such as 5–95 for May 1995) must be placed near the serial number. This information must be placed so that dates of subsequent tests can be easily added. An example of the markings prescribed in this paragraph (f)(1) is as follows:

DOT–3A1800
1234
XY
AB 5–95

Or;

DOT–3A1800–1234–XY
AB 5–95

Where:

DOT–3A=specification number
1800=service pressure
1234=serial number
xy=symbol of manufacturer
AB=inspector's mark
5–95=date of test

(2) Additional required marking must be applied to the cylinder as follows:

(i) The word ''spun'' or ''plug'' must be placed near the DOT specification marking when an end closure in the finished cylinder has been welded by the spinning process, or effected by plugging.

(ii) As prescribed in specification 3HT (§178.44) or 3T (§178.45), if applicable.

(3) Marking exceptions.

(i) A DOT 3E cylinder is not required to be marked with the inspector mark.

(ii) An identifying lot number may be marked on the cylinder in place of a serial number for cylinders not over 2 inches outside diameter or for cylinders with a volumetric capacity not exceeding 60 cubic inches. Each lot shall not have over 500 cylinders.

(4) Unless otherwise specified in the applicable specification, the markings on each cylinder must be stamped plainly and permanently on the shoulder, top head, or neck.

(5) The size of each marking must be at least 0.25 inch or as space permits.

(6) Other markings are authorized provided they are made in low stress areas other than the side wall and are not of a size and depth that will create harmful stress concentrations. Such marks may not conflict with any DOT required markings.

(g) *Inspector's report.* Each inspector shall prepare a report containing, at a minimum, the applicable information listed in CGA Pamphlet C–11 or, until October 1, 1997, in accordance with the applicable test report requirements of this subchapter in effect on September 30, 1996. Any additional information or markings that are required by the applicable specification must be shown on the test report. The signature of the inspector on the reports certifies that the processes of manufacture and heat treatment of cylinders were observed and found satisfactory.

(h) *Report retention.* The manufacturer of the cylinders shall retain the reports required by this subpart for 15 years from the original test date of the cylinder.

§178.36 Specification 3A and 3AX seamless steel cylinders.

(a) *Type size and service pressure.* In addition to the requirements of §178.35, cylinders must conform to the following:

(1) A DOT–3A cylinder is a seamless steel cylinder with a water capacity (nominal) not over 1,000 pounds and a service pressure of at least 150 pounds per square inch.

(2) A DOT–3AX is a seamless stainless steel cylinder with a water capacity not less than 1,000 pounds and a service

pressure of at least 500 pounds per square inch, conforming to the following requirements:

(i) Assuming the cylinder is to be supported horizontally at its two ends only and to be uniformly loaded over its entire length consisting of the weight per unit of length of the straight cylindrical portion filled with water and compressed to the specified test pressure; the sum of two times the maximum tensile stress in the bottom fibers due to bending, plus that in the same fibers (longitudinal stress), due to hydrostatic test may not exceed 80 percent of the minimum yield strength of the steel at such maximum stress. Wall thickness must be increased when necessary to meet the requirement.

(ii) To calculate the maximum longitudinal tensile stress due to bending, the following formula must be used:

$S=Mc/I$

(iii) To calculate the maximum longitudinal tensile stress due to hydrostatic test pressure, the following formula must be used:

$S=A_1 P/A_2$

where:

S=tensile stress—p.s.i.;
M=bending moment-inch pounds—$(wl^2)/8$;
w=weight per inch of cylinder filled with water;
l=length of cylinder-inches;
c=radius (D)/(2) of cylinder-inches;
I=moment of inertia—$0.04909\ (D^4-d^4)$ inches fourth;
D=outside diameter-inches;
d=inside diameter-inches;
A_1=internal area in cross section of cylinder-square inches;
A_2=area of metal in cross section of cylinder-square inches;
P=hydrostatic test pressure-p.s.i.

(b) *Steel.* Open-hearth or electric steel of uniform quality must be used. Content percent may not exceed the following: Carbon, 0.55; phosphorous, 0.045; sulphur, 0.050.

(c) *Identification of material.* Material must be identified by any suitable method, except that plates and billets for hot-drawn cylinders must be marked with the heat number.

(d) *Manufacture.* Cylinders must be manufactured using equipment and processes adequate to ensure that each cylinder produced conforms to the requirements of this subpart. No fissure or other defect is permitted that is likely to weaken the finished cylinder appreciably. A reasonably smooth and uniform surface finish is required. If not originally free from such defects, the surface may be machined or otherwise treated to eliminate these defects. The thickness of the bottoms of cylinders welded or formed by spinning is, under no condition, to be less than two times the minimum wall thickness of the cylindrical shell; such bottom thicknesses must be measured within an area bounded by a line representing the points of contact between the cylinder and floor when the cylinder is in a vertical position.

(e) *Welding or brazing.* Welding or brazing for any purpose whatsoever is prohibited except as follows:

(1) Welding or brazing is authorized for the attachment of neckrings and footrings which are non-pressure parts and only to the tops and bottoms of cylinders having a service pressure of 500 pounds per square inch or less. Cylinders, neckrings, and footrings must be made of weldable steel, the carbon content of which may not exceed 0.25 percent except in the case of 4130X steel which may be used with proper welding procedures.

(2) As permitted in paragraph (d) of this section.

(3) Cylinders used solely in anhydrous ammonia service may have a ½ inch diameter bar welded within their concave bottoms.

(f) *Wall thickness.* For cylinders with service pressure less than 900 pounds, the wall stress may not exceed 24,000 pounds per square inch. A minimum wall thickness of 0.100 inch is required for any cylinder over 5 inches outside diameter. Wall stress calculation must be made by using the following formula:

$S=[P(1.3D^2+0.4d^2)]/(D^2-d^2)$

Where:

S=wall stress in pounds per square inch;
P=minimum test pressure prescribed for water jacket test or 450 pounds per square inch whichever is the greater;
D=outside diameter in inches;
d=inside diameter in inches.

(g) *Heat treatment.* The completed cylinder must be uniformly and properly heat-treated prior to tests.

(h) *Openings in cylinders and connections (valves, fuse plugs, etc.) for those openings.* Threads are required on openings.

(1) Threads must be clean cut, even, without checks, and to gauge.

(2) Taper threads, when used, must be of length not less than as specified for American Standard taper pipe threads.

(3) Straight threads having at least 6 engaged threads are authorized. Straight threads must have a tight fit and calculated shear strength of at least 10 times the test pressure of the cylinder. Gaskets, adequate to prevent leakage, are required.

(i) *Hydrostatic test.* Each cylinder must successfully withstand a hydrostatic test, as follows:

(1) The test must be by water-jacket, or other suitable methods, operated so as to obtain accurate data. The pressure gauge must permit reading to an accuracy of 1 percent. The expansion gauge must permit reading of total expansion to an accuracy of either 1 percent or 0.1 cubic centimeter.

(2) Pressure must be maintained for at least 30 seconds and sufficiently longer to ensure complete expansion. Any internal pressure applied after heat-treatment and previous to the official test may not exceed 90 percent of the test pressure. If, due to failure of the test apparatus the test pressure cannot be maintained the test may be repeated at a pressure increased by 10 percent or 100 pounds per square inch, whichever is the lower.

(3) Permanent, volumetric expansion may not exceed 10 percent of the total volumetric expansion at test pressure.

(4) Each cylinder must be tested to at least ⅝ times service pressure.

(j) *Flattening test.* A flattening test must be performed on one cylinder taken at random out or each lot of 200 or less, by placing the cylinder between wedge shaped knife edges having a 60° included angle, rounded to ½-inch radius. The longitudinal axis of the cylinder must be at a 90-degree angle to knife edges during the test. For lots of 30 or less, flattening tests are authorized to be made on a ring at least 8 inches long cut from each cylinder and subjected to same heat treatment as the finished cylinder.

(k) *Physical test.* A physical test must be conducted to determine yield strength, tensile strength, elongation, and reduction of area of material as follows:

(1) The test is required on 2 specimens cut from 1 cylinder taken at random out of each lot of 200 or less. For lots of 30 or less, physical tests are authorized to be made on a ring at least 8 inches long cut from each cylinder and subjected to same heat treatment as the finished cylinder.

(2) Specimens must conform to the following:

(i) Gauge length of 8 inches with a width of not over 1½ inches, a gauge length of 2 inches with a width of not over 1½ inches, or a gauge length of at least 24 times thickness with width not over 6 times thickness is authorized when cylinder wall is not over 3⁄16 inch thick.

(ii) The specimen, exclusive of grip ends, may not be flattened. Grip ends may be flattened to within 1 inch of each end of the reduced section.

(iii) When size of cylinder does not permit securing straight specimens, the specimens may be taken in any location or direction and may be straightened or flattened cold, by pressure only, not by blows. When specimens are so taken and prepared, the inspector's report must show in connection with record of physical tests detailed information in regard to such specimens.

(iv) Heating of a specimen for any purpose is not authorized.

(3) The yield strength in tension must be the stress corresponding to a permanent strain of 0.2 percent of the gauge length. The following conditions apply:

(i) The yield strength must be determined by either the ''offset'' method or the ''extension under load'' method as prescribed in ASTM Standard E8.

(ii) In using the ''extension under load'' method, the total strain (or ''extension under load'') corresponding to the stress at which the 0.2-percent permanent strain occurs may be determined with sufficient accuracy by calculating the elastic extension of the gauge length under appropriate load

and adding thereto 0.2 percent of the gauge length. Elastic extension calculations must be based on an elastic modulus of 30,000,000. In the event of controversy the entire stress-strain diagram must be plotted and the yield strength determined from the 0.2 percent offset.

(iii) For the purpose of strain measurement, the initial strain must be set while the specimen is under a stress of 12,000 pounds per square inch and the strain indicator reading must be set at the calculated corresponding strain.

(iv) Cross-head speed of the testing machine may not exceed ⅛ inch per minute during yield strength determination.

(l) *Acceptable results for physical and flattening tests.* Either of the following is an acceptable result:

(1) An elongation at least 40 percent for a 2-inch gauge length or at least 20 percent in other cases and yield strength not over 73 percent of tensile strength. In this instance, the flattening test is not required.

(2) An elongation at least 20 percent for a 2-inch gauge length or 10 percent in other cases and a yield strength not over 73 percent of tensile strength. In this instance, the flattening test is required, without cracking, to 6 times the wall thickness.

(m) *Leakage test.* All spun cylinders and plugged cylinders must be tested for leakage by gas or air pressure after the bottom has been cleaned and is free from all moisture subject to the following conditions and limitations:

(1) Pressure, approximately the same as but no less than service pressure, must be applied to one side of the finished bottom over an area of at least 1/16 of the total area of the bottom but not less than ¾ inch in diameter, including the closure, for at least 1 minute, during which time the other side of the bottom exposed to pressure must be covered with water and closely examined for indications of leakage. Except as provided in paragraph (n) of this section, a cylinder that is leaking must be rejected.

(2) A spun cylinder is one in which an end closure in the finished cylinder has been welded by the spinning process.

(3) A plugged cylinder is one in which a permanent closure in the bottom of a finished cylinder has been effected by a plug.

(4) As a safety precaution, if the manufacturer elects to make this test before the hydrostatic test, the manufacturer should design the test apparatus so that the pressure is applied to the smallest area practicable, around the point of closure, and so as to use the smallest possible volume of air or gas.

(n) *Rejected cylinders.* Reheat treatment is authorized for rejected cylinders. Subsequent thereto, cylinders must pass all prescribed tests to be acceptable. Repair by welding or spinning is not authorized. Spun cylinders rejected under the provisions of paragraph (m) of this section may be removed from the spun cylinder category by drilling to remove defective material, tapping and plugging.

[Amdt. 178–114, 61 FR 25942, May 23, 1996, as amended at 62 FR 51561, Oct. 1, 1997]

§ 178.37 Specification 3AA and 3AAX seamless steel cylinders.

(a) *Type, size and service pressure.* In addition to the requirements of § 178.35, cylinders must conform to the following:

(1) A DOT–3AA cylinder is a seamless steel cylinder with a water capacity (nominal) of not over 1,000 pounds and a service pressure of at least 150 pounds per square inch.

(2) A DOT–3AAX cylinder is a seamless steel cylinder with a water capacity of not less than 1,000 pounds and a service pressure of at least 500 pounds per square inch, conforming to the following requirements:

(i) Assuming the cylinder is to be supported horizontally at its two ends only and to be uniformly loaded over its entire length consisting of the weight per unit of length of the straight cylindrical portion filled with water and compressed to the specified test pressure; the sum of two times the maximum tensile stress in the bottom fibers due to bending, plus that in the same fibers (longitudinal stress), due to hydrostatic test pressure may not exceed 80 percent of the minimum yield strength of the steel at such maximum stress. Wall thickness must be increased when necessary to meet the requirement.

(ii) To calculate the maximum tensile stress due to bending, the following formula must be used:

$S=Mc/I$

(iii) To calculate the maximum longitudinal tensile stress due to hydrostatic test pressure, the following formula must be used:

$S=A^1P/A^2$

Where:
S=tensile stress-p.s.i.;
M=bending moment-inch pounds $(wl^2)/8$;
w=weight per inch of cylinder filled with water;
l=length of cylinder-inches;
c=radius (D)/(2) of cylinder-inches;
I=moment of inertia-0.04909 (D^4-d^4) inches fourth;
D=outside diameter-inches;
d=inside diameter-inches;
A^1=internal area in cross section of cylinder-square inches;
A^2=area of metal in cross section of cylinder-square inches;
P=hydrostatic test pressure-p.s.i.

(b) *Authorized steel.* Open-hearth, basic oxygen, or electric steel of uniform quality must be used. A heat of steel made under the specifications in Table 1 of this paragraph (b), check chemical analysis of which is slightly out of the specified range, is acceptable, if satisfactory in all other respects, provided the tolerances shown in Table 2 of this paragraph (b) are not exceeded. When a carbon-boron steel is used, a hardenability test must be performed on the first and last ingot of each heat of steel. The results of this test must be recorded on the Record of Chemical Analysis of Material for Cylinders required by § 178.35. This hardness test must be made 5/16-inch from the quenched end of the Jominy quench bar and the hardness must be at least Rc 33 and no more than Rc 53. The following chemical analyses are authorized:

TABLE 1.—AUTHORIZED MATERIALS

Designation	4130X (percent) (see Note 1)	NE–8630 (percent) (see Note 1)	9115 (percent) (see Note 1)	9125 (percent) (see Note 1)	Carbon-boron (percent)	Inter- mediate manganese (percent)
Carbon	0.25/0.35	0.28/0.33	0.10/0.20	0.20/0.30	0.27–0.37	0.40 max.
Manganese	0.40/0.90	0.70/0.90	0.50/0.75	0.50/0.75	0.80–1.40	1.35/1.65.
Phosphorus	0.04 max	0.04 max	0.04 max	0.04 max	0.035 max	0.04 max.
Sulfur	0.05 max	0.04 max	0.04 max	0.04 max	0.045 max	0.05 max.
Silicon	0.15/0.35	0.20/0.35	0.60/0.90	0.60/0.90	0.3 max.	0.10/0.30.
Chromium	0.80/1.10	0.40/0.60	0.50/0.65	0.50/0.65.		
Molybdenum	0.15/0.25	0.15/0.25				
Zirconium			0.05/0.15	0.05/0.15		
Nickel		0.40/0.70.				
Boron					0.0005/0.003.	

NOTE 1: This designation may not be restrictive and the commercial steel is limited in analysis as shown in this Table.

TABLE 2.—CHECK ANALYSIS TOLERANCES

Element	Limit or maximum specified (percent)	Tolerance (percent) over the maximum limit or under the minimum limit	
		Under minimum limit	Over maximum limit
Carbon	To 0.15 incl	0.02	0.03
	Over 0.15 to 0.40 incl	.03	.04
Manganese	To 0.60 incl	.03	.03
	Over 0.60 to 1.15 incl	0.04	0.04
	Over 1.15 to 2.50 incl	0.05	0.05
Phosphorus[1]	All ranges		.01
Sulphur	All ranges		.01
Silicon	To 0.30 incl	.02	.03
	Over 0.30 to 1.00 incl	.05	.05
Nickel	To 1.00 incl	.03	.03
Chromium	To 0.90 incl	.03	.03
	0.90 to 2.90 incl	.05	.05
Molybdenum	To 0.20 incl	.01	.01
	Over 0.20 to 0.40	.02	.02
Zirconium	All ranges	.01	.05

[1] Rephosphorized steels not subject to check analysis for phosphorus.

(c) *Identification of material.* Material must be identified by any suitable method except that plates and billets for hot-drawn cylinders must be marked with the heat number.

(d) *Manufacture.* Cylinders must be manufactured using equipment and processes adequate to ensure that each cylinder produced conforms to the requirements of this subpart. No fissure or other defects is permitted that is likely to weaken the finished cylinder appreciably. A reasonably smooth and uniform surface finish is required. If not originally free from such defects, the surface may be machined or otherwise treated to eliminate these defects. The thickness of the bottoms of cylinders welded or formed by spinning is, under no condition, to be less than two times the minimum wall thickness of the cylindrical shell; such bottom thicknesses must be measured within an area bounded by a line representing the points of contact between the cylinder and floor when the cylinder is in a vertical position.

(e) *Welding or brazing.* Welding or brazing for any purpose whatsoever is prohibited except as follows:

(1) Welding or brazing is authorized for the attachment of neckrings and footrings which are non-pressure parts, and only to the tops and bottoms of cylinders having a service pressure of 500 pounds per square inch or less. Cylinders, neckrings, and footrings must be made of weldable steel, the carbon content of which may not exceed 0.25 percent except in the case of 4130X steel which may be used with proper welding procedure.

(2) As permitted in paragraph (d) of this section.

(f) *Wall thickness.* The thickness of each cylinder must conform to the following:

(1) For cylinders with a service pressure of less than 900 pounds, the wall stress may not exceed 24,000 pounds per square inch. A minimum wall thickness of 0.100 inch is required for any cylinder with an outside diameter of over 5 inches.

(2) For cylinders with service pressure of 900 p.s.i. or more the minimum wall must be such that the wall stress at the minimum specified test pressure may not exceed 67 percent of the minimum tensile strength of the steel as determined from the physical tests required in paragraphs (k) and (l) of this section and must be not over 70,000 p.s.i.

(3) Calculation must be made by the formula:

$$S=[P(1.3D^2+0.4d^2)]/(D^2-d^2)$$

Where:

S=wall stress in pounds per square inch;

P=minimum test pressure prescribed for water jacket test or 450 pounds per square inch whichever is the greater;

D=outside diameter in inches;

d=inside diameter in inches.

(g) *Heat treatment.* The completed cylinders must be uniformly and properly heat treated prior to tests. Heat treatment of cylinders of the authorized analyses must be as follows:

(1) All cylinders must be quenched by oil, or other suitable medium except as provided in paragraph (g)(5) of this section.

(2) The steel temperature on quenching must be that recommended for the steel analysis, but may not exceed 1750 °F.

(3) All steels must be tempered at a temperature most suitable for that steel.

(4) The minimum tempering temperature may not be less than 1000 °F except as noted in paragraph (1)(vi) of this section.

(5) Steel 4130X may be normalized at a temperature of 1650 °F instead of being quenched and cylinders so normalized need not be tempered.

(6) Intermediate manganese steels may be tempered at temperatures not less than 1150 °F., and after heat treating each cylinder must be submitted to a magnetic test to detect the presence of quenching cracks. Cracked cylinders must be rejected and destroyed.

(7) Except as otherwise provided in paragraph (g)(6) of this section, all cylinders, if water quenched or quenched with a liquid producing a cooling rate in excess of 80 percent of the cooling rate of water, must be inspected by the magnetic particle, dye penetrant or ultrasonic method to detect the presence

of quenching cracks. Any cylinder designed to the requirements for specification 3AA and found to have a quenching crack must be rejected and may not be requalified. Cylinders designed to the requirements for specification 3AAX and found to have cracks must have cracks removed to sound metal by mechanical means. Such specification 3AAX cylinders will be acceptable if the repaired area is subsequently examined to assure no defect, and it is determined that design thickness requirements are met.

(h) *Openings in cylinders and connections (valves, fuse plugs, etc.) for those openings.* Threads are required on openings.

(1) Threads must be clean cut, even, without checks, and to gauge.

(2) Taper threads, when used, must be of a length not less than as specified for American Standard taper pipe threads.

(3) Straight threads having at least 6 engaged threads are authorized. Straight threads must have a tight fit and a calculated shear strength of at least 10 times the test pressure of the cylinder. Gaskets, adequate to prevent leakage, are required.

(i) *Hydrostatic test.* Each cylinder must successfully withstand a hydrostatic test as follows:

(1) The test must be by water-jacket, or other suitable method, operated so as to obtain accurate data. The pressure gauge must permit reading to an accuracy of 1 percent. The expansion gauge must permit reading of total expansion to an accuracy of either 1 percent or 0.1 cubic centimeter.

(2) Pressure must be maintained for at least 30 seconds and sufficiently longer to ensure complete expansion. Any internal pressure applied after heat-treatment and previous to the official test may not exceed 90 percent of the test pressure. If, due to failure of the test apparatus, the test pressure cannot be maintained, the test may be repeated at a pressure increased by 10 percent or 100 pounds per square inch, whichever is the lower.

(3) Permanent volumetric expansion may not exceed 10 percent of total volumetric expansion at test pressure.

(4) Each cylinder must be tested to at least ⅝ times the service pressure.

(j) *Flattening test.* A flattening test must be performed on one cylinder taken at random out of each lot of 200 or less, by placing the cylinder between wedge shaped knife edges having a 60° included angle, rounded to ½-inch radius. The longitudinal axis of the cylinder must be at a 90-degree angle to knife edges during the test. For lots of 30 or less, flattening tests are authorized to be made on a ring at least 8 inches long cut from each cylinder and subjected to same heat treatment as the finished cylinder.

(k) *Physical test.* A physical test must be conducted to determine yield strength, tensile strength, elongation, and reduction of area of material as follows:

(1) The test is required on 2 specimens cut from 1 cylinder taken at random out of each lot of 200 or less. For lots of 30 or less, physical tests are authorized to be made on a ring at least 8 inches long cut from each cylinder and subjected to the same heat treatment as the finished cylinder.

(2) Specimens must conform to the following:

(i) Gauge length of 8 inches with a width of not over 1½ inches, a gauge length of 2 inches with a width of not over 1½ inches, or a gauge length of at least 24 times the thickness with width not over 6 times thickness when the thickness of the cylinder wall is not over 3/16 inch.

(ii) The specimen, exclusive of grip ends, may not be flattened. Grip ends may be flattened to within 1 inch of each end of the reduced section.

(iii) When size of cylinder does not permit securing straight specimens, the specimens may be taken in any location or direction and may be straightened or flattened cold, by pressure only, not by blows. When specimens are so taken and prepared, the inspector's report must show in connection with record of physical tests detailed information in regard to such specimens.

(iv) Heating of a specimen for any purpose is not authorized.

(3) The yield strength in tension must be the stress corresponding to a permanent strain of 0.2 percent of the gauge length. The following conditions apply:

(i) The yield strength must be determined by either the ''offset'' method or the ''extension under load'' method as prescribed in ASTM Standard E8.

(ii) In using the ''extension under load'' method, the total strain (or ''extension under load'') corresponding to the stress at which the 0.2 percent permanent strain occurs may be determined with sufficient accuracy by calculating the elastic extension of the gauge length under appropriate load and adding thereto 0.2 percent of the gauge length. Elastic extension calculations must be based on an elastic modulus of 30,000,000. In the event of controversy, the entire stress-strain diagram must be plotted and the yield strength determined from the 0.2 percent offset.

(iii) For the purpose of strain measurement, the initial strain must be set while the specimen is under a stress of 12,000 pounds per square inch, the strain indicator reading being set at the calculated corresponding strain.

(iv) Cross-head speed of the testing machine may not exceed ⅛ inch per minute during yield strength determination.

(l) *Acceptable results for physical and flattening tests.* An acceptable result for physical and flattening tests is elongation at least 20 percent for 2 inches of gauge length or at least 10 percent in other cases. Flattening is required without cracking to 6 times the wall thickness of the cylinder.

(m) *Leakage test.* All spun cylinders and plugged cylinders must be tested for leakage by gas or air pressure after the bottom has been cleaned and is free from all moisture. Pressure, approximately the same as but no less than the service pressure, must be applied to one side of the finished bottom over an area of at least 1/16 of the total area of the bottom but not less than ¾ inch in diameter, including the closure, for at least one minute, during which time the other side of the bottom exposed to pressure must be covered with water and closely examined for indications of leakage. Except as provided in paragraph (n) of this section, a cylinder must be rejected if there is any leaking.

(1) A spun cylinder is one in which an end closure in the finished cylinder has been welded by the spinning process.

(2) A plugged cylinder is one in which a permanent closure in the bottom of a finished cylinder has been effected by a plug.

(3) As a safety precaution, if the manufacturer elects to make this test before the hydrostatic test, the manufacturer should design the test apparatus so that the pressure is applied to the smallest area practicable, around the point of closure, and so as to use the smallest possible volume of air or gas.

(n) *Rejected cylinders.* Reheat treatment is authorized for rejected cylinders. Subsequent thereto, cylinders must pass all prescribed tests to be acceptable. Repair by welding or spinning is not authorized. Spun cylinders rejected under the provision of paragraph (m) of this section may be removed from the spun cylinder category by drilling to remove defective material, tapping and plugging.

§ 178.38 Specification 3B seamless steel cylinders.

(a) *Type, size, and service pressure.* A DOT 3B cylinder is seamless steel cylinder with a water capacity (nominal) of not over 1,000 pounds and a service pressure of at least 150 to not over 500 pounds per square inch.

(b) *Steel.* Open-hearth or electric steel of uniform quality must be used. Content percent may not exceed the following: carbon, 0.55; phosphorus, 0.045; sulphur, 0.050.

(c) *Identification of material.* Material must be identified by any suitable method except that plates and billets for hot-drawn cylinders must be marked with the heat number.

(d) *Manufacture.* Cylinders must be manufactured using equipment and processes adequate to ensure that each cylinder produced conforms to the requirements of this subpart. No fissure or other defect is permitted that is likely to weaken the finished cylinder appreciably. A reasonably smooth and uniform surface finish is required. If not originally free from such defects, the surface may be machined or otherwise treated to eliminate these defects.

The thickness of the bottoms of cylinders welded or formed by spinning is, under no condition, to be less than two times the minimum wall thickness of the cylindrical shell; such bottom thicknesses to be measured within an area bounded by a line representing the points of contact between the cylinder and floor when the cylinder is in a vertical position.

(e) *Welding or brazing.* Welding or brazing for any purpose whatsoever is prohibited except as follows:

(1) Welding or brazing is authorized for the attachment of neckrings and footrings which are non-pressure parts, and only to the tops and bottoms of cylinders having a service pressure of 500 pounds per square inch or less. Cylinders, neckrings, and footrings must be made of weldable steel, carbon content of which may not exceed 0.25 percent except in the case of 4130X steel which may be used with proper welding procedure.

(2) As permitted in paragraph (d) of this section.

(f) *Wall thickness.* The wall stress may not exceed 24,000 pounds per square inch. The minimum wall thickness is 0.090 inch for any cylinder with an outside diameter of 6 inches. Calculation must be made by the following formula:

$$S=[P(1.3D^2+0.4d^2)]/(D^2-d^2)$$

Where:

S=wall stress in pounds per square inch;

P=at least two times service pressure or 450 pounds per square inch, whichever is the greater;

D=outside diameter in inches;

d=inside diameter in inches.

(g) *Heat treatment.* The completed cylinders must be uniformly and properly heat-treated prior to tests.

(h) *Openings in cylinders and connections (valves, fuse plugs, etc.) for those openings.* Threads, conforming to the following, are required on all openings:

(1) Threads must be clean cut, even, without checks, and to gauge.

(2) Taper threads when used, must be of a length not less than as specified for American Standard taper pipe threads.

(3) Straight threads having at least 4 engaged threads are authorized. Straight threads must have a tight fit, and calculated shear strength at least 10 times the test pressure of the cylinder. Gaskets, adequate to prevent leakage, are required.

(i) *Hydrostatic test.* Cylinders must successfully withstand a hydrostatic test, as follows:

(1) The test must be by water-jacket, or other suitable method, operated so as to obtain accurate data. The pressure gauge must permit reading to an accuracy of 1 percent. The expansion gauge must permit reading of total expansion to an accuracy either of 1 percent or 0.1 cubic centimeter.

(2) Pressure must be maintained for at least 30 seconds and sufficiently longer to insure complete expansion. Any internal pressure applied after heat-treatment and previous to the official test may not exceed 90 percent of the test pressure. If, due to failure of the test apparatus, the test pressure cannot be maintained, the test may be repeated at a pressure increased by 10 percent or 100 pounds per square inch, whichever is the lower.

(3) Permanent volumetric expansion may not exceed 10 percent of total volumetric expansion at test pressure.

(4) Cylinders must be tested as follows:

(i) Each cylinder; to at least 2 times service pressure; or

(ii) 1 cylinder out of each lot of 200 or less; to at least 3 times service pressure. Others must be examined under pressure of 2 times service pressure and show no defect.

(j) *Flattening test.* A flattening test must be performed on one cylinder taken at random out or each lot of 200 or less, by placing the cylinder between wedge shaped knife edges having a 60° included angle, rounded to ½-inch radius. The longitudinal axis of the cylinder must be at a 90-degree angle to knife edges during the test. For lots of 30 or less, flattening tests are authorized to be made on a ring at least 8 inches long cut from each cylinder and subjected to same heat treatment as the finished cylinder.

(k) *Physical test.* A physical test must be conducted to determine yield strength, tensile strength, elongation, and reduction of area of material, as follows:

(1) The test is required on 2 specimens cut from 1 cylinder taken at random out of each lot of 200 or less. For lots of 30 or less, physical tests are authorized to be made on a ring at least 8 inches long cut from each cylinder and subjected to same heat treatment as the finished cylinder.

(2) Specimens must conform to the following:

(i) Gauge length of 8 inches with a width of not over 1½ inches; or a gauge length of 2 inches with a width of not over 1½ inches; or a gauge length at least 24 times the thickness with a width not over 6 times thickness is authorized when a cylinder wall is not over 3/16 inch thick.

(ii) The specimen, exclusive of grip ends, may not be flattened. Grip ends may be flattened to within one inch of each end of the reduced section.

(iii) When size of cylinder does not permit securing straight specimens, the specimens may be taken in any location or direction and may be straightened or flattened cold, by pressure only, not by blows. When specimens are so taken and prepared, the inspector's report must show in connection with record of physical tests detailed information in regard to such specimens.

(iv) Heating of a specimen for any purpose is not authorized.

(3) The yield strength in tension must be the stress corresponding to a permanent strain of 0.2 percent of the gauge length. The following conditions apply:

(i) The yield strength must be determined by either the ''offset'' method or the ''extension under load'' method as prescribed in ASTM Standard E8.

(ii) In using the ''extension under load'' method, the total strain (or ''extension under load'') corresponding to the stress at which the 0.2 percent permanent strain occurs may be determined with sufficient accuracy by calculating the elastic extension of the gauge length under appropriate load and adding thereto 0.2 percent of the gauge length. Elastic extension calculations must be based on an elastic modulus of 30,000,000. In the event of controversy, the entire stress-strain diagram must be plotted and the yield strength determined from the 0.2 percent offset.

(iii) For the purpose of strain measurement, the initial strain must be set while the specimen is under a stress of 12,000 pounds per square inch, and the strain indicator reading being set at the calculated corresponding strain.

(iv) Cross-head speed of the testing machine may not exceed ⅛ inch per minute during yield strength determination.

(l) *Acceptable results for physical and flattening tests.* Either of the following is an acceptable result:

(1) An elongation of at least 40 percent for a 2-inch gauge length or at least 20 percent in other cases and yield strength not over 73 percent of tensile strength. In this instance, the flattening test is not required.

(2) An elongation of at least 20 percent for a 2-inch gauge length or 10 percent in other cases and yield strength not over 73 percent of tensile strength. Flattening is required, without cracking, to 6 times the wall thickness.

(m) *Leakage test.* All spun cylinders and plugged cylinders must be tested for leakage by gas or air pressure after the bottom has been cleaned and is free from all moisture, subject to the following conditions and limitations:

(1) Pressure, approximately the same as but no less than service pressure, must be applied to one side of the finished bottom over an area of at least 1/16 of the total area of the bottom but not less than ¾ inch in diameter, including the closure, for at least one minute, during which time the other side of the bottom exposed to pressure must be covered with water and closely examined for indications of leakage. Except as provided in paragraph (n) of this section, a cylinder must be rejected if there is any leaking.

(2) A spun cylinder is one in which an end closure in the finished cylinder has been welded by the spinning process.

(3) A plugged cylinder is one in which a permanent closure in the bottom of a finished cylinder has been effected by a plug.

(4) As a safety precaution, if the manufacturer elects to make this test before the hydrostatic test, he should design his apparatus so that the pressure is applied to the smallest area

practicable, around the point of closure, and so as to use the smallest possible volume of air or gas.

(n) *Rejected cylinders.* Reheat treatment of rejected cylinders is authorized. Subsequent thereto, cylinders must pass all prescribed tests to be acceptable. Repair by welding or spinning is not authorized. Spun cylinders rejected under the provisions of paragraph (m) of this section may be removed from the spun cylinder category by drilling to remove defective material, tapping and plugging.

(o) *Marking.* Markings may be stamped into the sidewalls of cylinders having a service pressure of 150 psi if all of the following conditions are met:

(1) Wall stress at test pressure may not exceed 24,000 psi.

(2) Minimum wall thickness must be not less than 0.090 inch.

(3) Depth of stamping must be no greater than 15 percent of the minimum wall thickness, but may not exceed 0.015 inch.

(4) Maximum outside diameter of cylinder may not exceed 5 inches.

(5) Carbon content of cylinder may not exceed 0.25 percent. If the carbon content exceeds 0.25 percent, the complete cylinder must be normalized after stamping.

(6) Stamping must be adjacent to the top head.

§178.39 Specification 3BN seamless nickel cylinders.

(a) *Type, size and service pressure.* A DOT 3BN cylinder is a seamless nickel cylinder with a water capacity (nominal) not over 125 pounds water capacity (nominal) and a service pressure at least 150 to not over 500 pounds per square inch.

(b) *Nickel.* The percentage of nickel plus cobalt must be at least 99.0 percent.

(c) *Identification of material.* The material must be identified by any suitable method except that plates and billets for hot-drawn cylinders must be marked with the heat number.

(d) *Manufacture.* Cylinders must be manufactured using equipment and processes adequate to ensure that each cylinder produced conforms to the requirements of this subpart. No defect is permitted that is likely to weaken the finished cylinder appreciably. A reasonably smooth and uniform surface finish is required. Cylinders closed in by spinning process are not authorized.

(e) *Welding or brazing.* Welding or brazing for any purpose whatsoever is prohibited except that welding is authorized for the attachment of neckrings and footrings which are nonpressure parts, and only to the tops and bottoms of cylinders. Neckrings and footrings must be of weldable material, the carbon content of which may not exceed 0.25 percent. Nickel welding rod must be used.

(f) *Wall thickness.* The wall stress may not exceed 15,000 pounds per square inch. A minimum wall thickness of 0.100 inch is required for any cylinder over 5 inches in outside diameter. Wall stress calculation must be made by using the following formula:

$$S=[P(1.3D^2+0.4d^2)]/(D^2-d^2)$$

Where:

S=wall stress in pounds per square inch;

P=minimum test pressure prescribed for water jacket test or 450 pounds per square inch whichever is the greater;

D=outside diameter in inches;

d=inside diameter in inches.

(g) *Heat treatment.* The completed cylinders must be uniformly and properly heat-treated prior to tests.

(h) *Openings in cylinders and connections (valves, fuse plugs, etc.) for those openings.* Threads conforming to the following are required on openings:

(1) Threads must be clean cut, even, without checks, and to gauge.

(2) Taper threads, when used, to be of length not less than as specified for American Standard taper pipe threads.

(3) Straight threads having at least 6 engaged threads are authorized. Straight threads must have a tight fit and a calculated shear strength of at least 10 times the test pressure of the cylinder. Gaskets, adequate to prevent leakage, are required.

(i) *Hydrostatic test.* Each cylinder must successfully withstand a hydrostatic test, as follows:

(1) The test must be by water-jacket, or other suitable method, operated so as to obtain accurate data. The pressure gauge must permit reading to an

accuracy of 1 percent. The expansion gauge must permit reading of total expansion to an accuracy either of 1 percent or 0.1 cubic centimeter.

(2) Pressure must be maintained for at least 30 seconds and sufficiently longer to ensure complete expansion. Any internal pressure applied after heat-treatment and previous to the official test may not exceed 90 percent of the test pressure. If, due to failure of the test apparatus, the test pressure cannot be maintained, the test may be repeated at a pressure increased by 10 percent or 100 pounds per square inch, whichever is the lower.

(3) Permanent volumetric expansion may not exceed 10 percent of total volumetric expansion at test pressure.

(4) Each cylinder must be tested to at least 2 times service pressure.

(j) *Flattening test.* A flattening test must be performed on one cylinder taken at random out or each lot of 200 or less, by placing the cylinder between wedge shaped knife edges having a 60° included angle, rounded to ½-inch radius. The longitudinal axis of the cylinder must be at a 90-degree angle to knife edges during the test. For lots of 30 or less, flattening tests are authorized to be made on a ring at least 8 inches long cut from each cylinder and subjected to same heat treatment as the finished cylinder.

(k) *Physical test.* A physical test must be conducted to determine yield strength, tensile strength, elongation, and reduction of area of material, as follows:

(1) The test is required on 2 specimens cut from 1 cylinder taken at random out of each lot of 200 or less. For lots of 30 or less, physical tests are authorized to be made on a ring at least 8 inches long cut from each cylinder and subjected to same heat treatment as the finished cylinder.

(2) Specimens must conform to the following:

(i) A gauge length of 8 inches with a width of not over 1½ inches, a gauge length of 2 inches with a width of not over 1½ inches, or a gauge length of at least 24 times the thickness with a width not over 6 times thickness is authorized when a cylinder wall is not over 3⁄16 inch thick.

(ii) The specimen, exclusive of grip ends, may not be flattened. Grip ends may be flattened to within one inch of each end of the reduced section.

(iii) When size of cylinder does not permit securing straight specimens, the specimens may be taken in any location or direction and may be straightened or flattened cold, by pressure only, not by blows. When specimens are so taken and prepared, the inspector's report must show in connection with record of physical tests detailed information in regard to such specimens.

(iv) Heating of a specimen for any purpose is not authorized.

(3) The yield strength in tension must be the stress corresponding to a permanent strain of 0.2 percent of the gauge length. The following conditions apply:

(i) The yield strength must be determined by either the ''offset'' method or the ''extension under load'' method as prescribed in ASTM Standard E8.

(ii) In using the ''extension under load'' method, the total strain (or ''extension under load'') corresponding to the stress at which the 0.2 percent permanent strain occurs may be determined with sufficient accuracy by calculating the elastic extension of the gauge length under appropriate load and adding thereto 0.2 percent of the gauge length. Elastic extension calculations must be based on an elastic modulus of 30,000,000. In the event of controversy, the entire stress-strain diagram must be plotted and the yield strength determined from the 0.2 percent offset.

(iii) For the purpose of strain measurement, the initial strain must be set while the specimen is under a stress of 12,000 pounds per square inch, and the strain indicator reading must be set at the calculated corresponding strain.

(iv) Cross-head speed of the testing machine may not exceed ⅛ inch per minute during yield strength determination.

(l) *Acceptable results for physical and flattening tests.* Either of the following is an acceptable result:

(1) An elongation of at least 40 percent for a 2 inch gauge length or at least 20 percent in other cases and

yield point not over 50 percent of tensile strength. In this instance, the flattening test is not required.

(2) An elongation of at least 20 percent for a 2 inch gauge length or 10 percent in other cases and a yield point not over 50 percent of tensile strength. Flattening is required, without cracking, to 6 times the wall thickness.

(m) *Rejected cylinders.* Reheat treatment is authorized for rejected cylinders. Subsequent thereto, cylinders must pass all prescribed tests to be acceptable. Repair by welding is not authorized.

§178.42 Specification 3E seamless steel cylinders.

(a) *Type, size, and service pressure.* A DOT 3E cylinder is a seamless steel cylinder with an outside diameter not greater than 2 inches nominal, a length less than 2 feet and a service pressure of 1,800 pounds per square inch.

(b) *Steel.* Open-hearth or electric steel of uniform quality must be used. Content percent may not exceed the following: Carbon, 0.55; phosphorus, 0.045; sulphur, 0.050.

(c) *Identification of steel.* Materials must be identified by any suitable method.

(d) *Manufacture.* Cylinders must be manufactured by best appliances and methods. No defect is permitted that is likely to weaken the finished cylinder appreciably. A reasonably smooth and uniform surface finish is required. The thickness of the spun bottom is, under no condition, to be less than two times the minimum wall thickness of the cylindrical shell; such bottom thickness must be measured within an area bounded by a line representing the points of contact between the cylinder and floor when the cylinder is in a vertical position.

(e) *Openings in cylinders and connections (valves, fuse plugs, etc.) for those openings.* Threads conforming to the following are required on openings.

(1) Threads must be clean cut, even, without checks, and to gauge.

(2) Taper threads, when used, must be of length not less than as specified for American Standard taper pipe threads.

(3) Straight threads having at least 4 engaged threads are authorized. Straight threads must have a tight fit and a calculated shear strength of at least 10 times the test pressure of the cylinder. Gaskets, adequate to prevent leakage, are required.

(f) *Hydrostatic test.* Cylinders must be tested as follows:

(1) One cylinder out of each lot of 500 or less must be subjected to a hydrostatic pressure of 6,000 pounds per square inch or higher.

(2) The cylinder referred to in paragraph (f)(1) of this section must burst at a pressure higher than 6,000 pounds per square inch without fragmenting or otherwise showing lack of ductility, or must hold a pressure of 12,000 pounds per square inch for 30 seconds without bursting. In which case, it must be subjected to a flattening test without cracking to six times wall thickness between knife edges, wedge shaped 60 degree angle, rounded out to a ½ inch radius. The inspector's report must be suitably changed to show results of latter alternate and flattening test.

(3) Other cylinders must be examined under pressure of at least 3,000 pounds per square inch and not to exceed 4,500 pounds per square inch and show no defect. Cylinders tested at a pressure in excess of 3,600 pounds per square inch must burst at a pressure higher than 7,500 pounds per square inch when tested as specified in paragraph (f)(2) of this section. The pressure must be maintained for at least 30 seconds and sufficiently longer to ensure complete examination.

(g) *Leakage test.* All spun cylinders and plugged cylinders must be tested for leakage by gas or air pressure after the bottom has been cleaned and is free from all moisture subject to the following conditions and limitations:

(1) A pressure, approximately the same as but not less than the service pressure, must be applied to one side of the finished bottom over an area of at least 1/16 of the total area of the bottom but not less than ¾ inch in diameter, including the closure, for at least one minute, during which time the other side of the bottom exposed to pressure must be covered with water and closely examined for indications of leakage. Accept as provided in paragraph (h) of this section, a cylinder must be rejected if there is any leakage.

(2) A spun cylinder is one in which an end closure in the finished cylinder has been welded by the spinning process.

(3) A plugged cylinder is one in which a permanent closure in the bottom of a finished cylinder has been effected by a plug.

(4) As a safety precaution, if the manufacturer elects to make this test before the hydrostatic test, the manufacturer shall design the test apparatus so that the pressure is applied to the smallest area practicable, around the point of closure, and so as to use the smallest possible volume of air or gas.

(h) *Rejected cylinders.* Reheat treatment is authorized for rejected cylinders. Subsequent thereto, cylinders must pass all prescribed tests to be acceptable. Repair by welding or spinning is not authorized. Spun cylinders rejected under the provisions of paragraph (g) of this section may be removed from the spun cylinder category by drilling to remove defective material, tapping and plugging.

(i) *Marking.* Markings required by § 178.35 must be stamped plainly and permanently on the shoulder, top head, neck or sidewall of each cylinder.

§ 178.44 Specification 3HT seamless steel cylinders for aircraft use.

(a) *Type, size and service pressure.* A DOT 3HT cylinder is a seamless steel cylinder with a water capacity (nominal) of not over 150 pounds and a service pressure of at least 900 pounds per square inch.

(b) *Authorized steel.* Open hearth or electric furnace steel of uniform quality must be used. A heat of steel made under the specifications listed in Table 1 in this paragraph (b), check chemical analysis of which is slightly out of the specified range, is acceptable, if satisfactory in all other respects, provided the tolerances shown in Table 2 in this paragraph (b) are not exceeded. Grain size 6 or finer according to ASTM E 112. Steel of the following chemical analysis is authorized:

TABLE 1.—AUTHORIZED MATERIALS

Designation	AISI 4130 (percent)
Carbon	0.28/0.33
Manganese	0.40/0.60
Phosphorus	0.040 maximum
Sulfur	0.040 maximum
Silicon	0.15/0.35
Chromium	0.80/1.10
Molybdenum	0.15/.025

TABLE 2.—CHECK ANALYSIS TOLERANCES

Element	Limit or maximum specified (percent)	Tolerance (percent) over the maximum limit or under the minimum limit	
		Under minimum limit	Over maximum limit
Carbon	Over 0.15 to 0.40 incl	.03	.04
Manganese	To 0.60 incl	.03	.03
Phosphorus[1]	All ranges	.....	.01
Sulphur	All ranges	.....	.01
Silicon	To 0.30 incl	.02	.03
	Over 0.30 to 1.00 incl	.05	.05
Chromium	To 0.90 incl	.03	.03
	Over 0.90 to 2.10 incl	.05	.05
Molybdenum	To 0.20 incl	.01	.01
	Over 0.20 to 0.40 incl	.02	.02

[1] Rephosphorized steels not subject to check analysis for phosphorus.

(c) *Identification of material.* Material must be identified by any suitable method. Steel stamping of heat identifications may not be made in any area which will eventually become the side wall of the cylinder. Depth of stamping may not encroach upon the minimum

prescribed wall thickness of the cylinder.

(d) *Manufacture.* Cylinders must be manufactured using equipment and processes adequate to ensure that each cylinder produced conforms to the requirements of this subpart. No fissure or other defect is permitted that is likely to weaken the finished container appreciably. The general surface finish may not exceed a roughness of 250 RMS. Individual irregularities such as draw marks, scratches, pits, etc., should be held to a minimum consistent with good high stress pressure vessel manufacturing practices. If the cylinder is not originally free of such defects or does not meet the finish requirements, the surface may be machined or otherwise treated to eliminate these defects. The point of closure of cylinders closed by spinning may not be less than two times the prescribed wall thickness of the cylindrical shell. The cylinder end contour must be hemispherical or ellipsoidal with a ratio of major-to-minor axis not exceeding two to one and with the concave side to pressure.

(e) *Welding or brazing.* Welding or brazing for any purpose whatsoever is prohibited, except that welding by spinning is permitted to close the bottom of spun cylinders. Machining or grinding to produce proper surface finish at point of closure is required.

(f) *Wall thickness.* (1) Minimum wall thickness for any cylinder must be 0.050 inch. The minimum wall thickness must be such that the wall stress at the minimum specified test pressure may not exceed 75 percent of the minimum tensile strength of the steel as determined from the physical tests required in paragraph (m) of this section and may not be over 105,000 psi.

(2) Calculations must be made by the formula:

$$S=[P(1.3D^2+0.4d^2)]/(D^2-d^2)$$

Where:

S=Wall stress in pounds per square inch;

P=Minimum test pressure prescribed for water jacket test;

D=Outside diameter in inches;

d=Inside diameter in inches.

(3) Wall thickness of hemispherical bottoms only permitted to 90 percent of minimum wall thickness of cylinder sidewall but may not be less than 0.050 inch. In all other cases, thickness to be no less than prescribed minimum wall.

(g) *Heat treatment.* The completed cylinders must be uniformly and properly heated prior to tests. Heat treatment of the cylinders of the authorized analysis must be as follows:

(1) All cylinders must be quenched by oil, or other suitable medium.

(2) The steel temperature on quenching must be that recommended for the steel analysis, but may not exceed 1750°F.

(3) The steel must be tempered at a temperature most suitable for the particular steel analysis but not less than 850°F.

(4) All cylinders must be inspected by the magnetic particle or dye penetrant method to detect the presence of quenching cracks. Any cylinder found to have a quenching crack must be rejected and may not be requalified.

(h) *Openings in cylinders and connections (valves, fuse plugs, etc.) for those openings.* Threads conforming to the following are required on openings:

(1) Threads must be clean cut, even, without cracks, and to gauge.

(2) Taper threads, when used, must be of length not less than as specified for National Gas Tapered Thread (NGT) as required by American Standard Compressed Gas Cylinder Valve Outlet and Inlet Connections.

(3) Straight threads having at least 6 engaged threads are authorized. Straight threads must have a tight fit and a calculated shear stress of at least 10 times the test pressure of the cylinder. Gaskets, adequate to prevent leakage, are required.

(i) *Hydrostatic test.* Each cylinder must withstand a hydrostatic test, as follows:

(1) The test must be by water-jacket, or other suitable method, operated so as to obtain accurate data. Pressure gauge must permit reading to an accuracy of 1 percent. The expansion gauge must permit reading of total expansion to an accuracy either of 1 percent of 0.1 cubic centimeter.

(2) Pressure must be maintained for at least 30 seconds and sufficiently longer to ensure complete expansion. Any internal pressure applied after

heat treatment and previous to the official test may not exceed 90 percent of the test pressure. If, due to failure of the test apparatus, the test pressure cannot be maintained, the test may be repeated at a pressure increased by 10 percent or 100 pounds per square inch, which ever is the lower.

(3) Permanent volumetric expansion may not exceed 10 percent of total volumetric expansion at test pressure.

(4) Each cylinder must be tested to at least ⅝ times service pressure.

(j) *Cycling tests.* Prior to the initial shipment of any specific cylinder design, cyclic pressurization tests must have been performed on at least three representative samples without failure as follows:

(1) Pressurization must be performed hydrostatically between approximately zero psig and the service pressure at a rate not in excess of 10 cycles per minute. Adequate recording instrumentation must be provided if equipment is to be left unattended for periods of time.

(2) Tests prescribed in paragraph (j)(1) of this section must be repeated on one random sample out of each lot of cylinders. The cylinder may then be subjected to a burst test.

(3) A lot is defined as a group of cylinders fabricated from the same heat of steel, manufactured by the same process and heat treated in the same equipment under the same conditions of time, temperature, and atmosphere, and may not exceed a quantity of 200 cylinders.

(4) All cylinders used in cycling tests must be destroyed.

(k) *Burst test.* One cylinder taken at random out of each lot of cylinders must be hydrostatically tested to destruction.

(l) *Flattening test.* A flattening test must be performed on one cylinder taken at random out or each lot of 200 or less, by placing the cylinder between wedge shaped knife edges having a 60° included angle, rounded to ½-inch radius. The longitudinal axis of the cylinder must be at a 90-degree angle to knife edges during the test. For lots of 30 or less, flattening tests are authorized to be made on a ring at least 8 inches long cut from each cylinder and subjected to same heat treatment as the finished cylinder.

(m) *Physical tests.* A physical test must be conducted to determine yield strength, tensile strength, elongation, and reduction of area of material, as follows:

(1) Test is required on 2 specimens cut from 1 cylinder taken at random out of each lot of cylinders.

(2) Specimens must conform to the following:

(i) A gauge length of at least 24 times the thickness with a width not over six times the thickness. The specimen, exclusive of grip ends, may not be flattened. Grip ends may be flattened to within one inch of each end of the reduced section. When size of cylinder does not permit securing straight specimens, the specimens may be taken in any location or direction and may be straightened or flattened cold by pressure only, not by blows. When specimens are so taken and prepared, the inspector's report must show in connection with the record of physical tests detailed information in regard to such specimens.

(ii) Heating of a specimen for any purpose is not authorized.

(3) The yield strength in tension must be the stress corresponding to a permanent strain of 0.2 percent of the gauge length.

(i) The yield strength must be determined by either the ''offset'' method or the ''extension under load'' method as prescribed in ASTM Standard E8.

(ii) In using the ''extension under load'' method, the total strain (or ''extension under load'') corresponding to the stress at which the 0.2 percent permanent strain occurs may be determined with sufficient accuracy by calculating the elastic extension of the gauge length under appropriate load and adding thereto 0.2 percent of the gauge length. Elastic extension calculations must be based on an elastic modulus of 30,000,000. In the event of controversy, the entire stress-strain diagram must be plotted and the yield strength determined from the 0.2 percent offset.

(iii) For the purpose of strain measurement, the initial strain must be set while the specimen is under a stress of 12,000 pounds per square inch, the

strain indicator reading being set at the calculated corresponding strain.

(iv) Cross-head speed of the testing machine may not exceed ⅛ inch per minute during yield strength determination.

(n) *Magnetic particle inspection.* Inspection must be performed on the inside of each container before closing and externally on each finished container after heat treatment. Evidence of discontinuities, which in the opinion of a qualified inspector may appreciably weaken or decrease the durability of the cylinder, must be cause for rejection.

(o) *Leakage test.* All spun cylinders and plugged cylinders must be tested for leakage by dry gas or dry air pressure after the bottom has been cleaned and is free from all moisture, subject to the following conditions and limitations:

(1) Pressure, approximately the same as but not less than service pressure, must be applied to one side of the finished bottom over an area of at least 1⁄16 of the total area of the bottom but not less than ¾ inch in diameter, including the closure, for at least one minute, during which time the other side of the bottom exposed to pressure must be covered with water and closely examined for indications of leakage. Except as provided in paragraph (q) of this section, a cylinder must be rejected if there is leakage.

(2) A spun cylinder is one in which an end closure in the finished cylinder has been welded by the spinning process.

(3) A plugged cylinder is one in which a permanent closure in the bottom of a finished cylinder has been effected by a plug.

(4) As a safety precaution, if the manufacturer elects to make this test before the hydrostatic test, the manufacturer should design the test apparatus so that the pressure is applied to the smallest area practicable, around the point of closure, and so as to use the smallest possible volume of air or gas.

(p) *Acceptable results of tests.* Results of the flattening test, physical tests, burst test, and cycling test must conform to the following:

(1) Flattening required without cracking to ten times the wall thickness of the cylinder.

(2) Physical tests:

(i) An elongation of at least 6 percent for a gauge length of 24 times the wall thickness.

(ii) The tensile strength may not exceed 165,000 p.s.i.

(3) The burst pressure must be at least 4⁄3 times the test pressure.

(4) Cycling-at least 10,000 pressurizations.

(q) *Rejected cylinders.* Reheat treatment is authorized for rejected cylinders. Subsequent thereto, cylinders must pass all prescribed tests to be acceptable. Repair by welding or spinning is not authorized. For each cylinder subjected to reheat treatment during original manufacture, sidewall measurements must be made to verify that the minimum sidewall thickness meets specification requirements after the final heat treatment.

(r) *Marking.* (1) Cylinders must be marked by low stress type steel stamping in an area and to a depth which will insure that the wall thickness measured from the root of the stamping to the interior surface is equal to or greater than the minimum prescribed wall thickness. Stamping must be permanent and legible. Stamping on side wall not authorized.

(2) The rejection elastic expansion (REE), in cubic centimeters (cc), must be marked on the cylinder near the date of test. The REE for a cylinder is 1.05 times its original elastic expansion.

(3) Name plates are authorized, provided that they can be permanently and securely attached to the cylinder. Attachment by either brazing or welding is not permitted. Attachment by soldering is permitted provided steel temperature does not exceed 500 °F.

(s) *Inspector's report.* In addition to the requirements of §178.35, the inspector's report must indicate the rejection elastic expansion (REE), in cubic centimeters (cc).

[Amdt. 178–114, 61 FR 25942, May 23, 1996, as amended at 62 FR 51561, Oct. 1, 1997]

§ 178.45 Specification 3T seamless steel cylinder.

(a) *Type, size, and service pressure.* A DOT 3T cylinder is a seamless steel cylinder with a minimum water capacity of 1,000 pounds and a minimum service pressure of 1,800 p.s.i. Each cylinder must have integrally formed heads concave to pressure at both ends. The inside head shape must be hemispherical, ellipsoidal in which the major axis is two times the minor axis, or a dished shape falling within these two limits. Permanent closures formed by spinning are prohibited.

(b) *Material, steel.* Only open hearth, basic oxygen, or electric furnace process steel of uniform quality is authorized. The steel analysis must conform to the following:

ANALYSIS TOLERANCES

Element	Ladle analysis	Check Analysis	
		Under	Over
Carbon	0.35 to 0.50	0.03	0.04
Manganese	0.75 to 1.05	0.04	0.04
Phosphorus (max)	0.035	.....	0.01
Sulphur (max)	0.04	.....	0.01
Silicon	0.15 to 0.35	0.02	0.03
Chromium	0.80 to 1.15	0.05	0.05
Molybdenum	0.15 to 0.25	0.02	0.02

(1) A heat of steel made under the specifications in the table in this paragraph (b), the ladle analysis of which is slightly out of the specified range, is acceptable if satisfactory in all other aspects. However, the check analysis tolerances shown in the table in this paragraph (b) may not be exceeded except as approved by the Department.

(2) Material with seams, cracks, laminations, or other injurious defects is not permitted.

(3) Material used must be identified by any suitable method.

(c) *Manufacture.* General manufacturing requirements are as follows:

(1) Surface finish must be uniform and reasonably smooth.

(2) Inside surfaces must be clean, dry, and free of loose particles.

(3) No defect of any kind is permitted if it is likely to weaken a finished cylinder.

(4) If the cylinder surface is not originally free from the defects, the surface may be machined or otherwise treated to eliminate these defects provided the minimum wall thickness is maintained.

(5) Welding or brazing on a cylinder is not permitted.

(d) *Wall thickness.* The minimum wall thickness must be such that the wall stress at the minimum specified test pressure does not exceed 67 percent of the minimum tensile strength of the steel as determined by the physical tests required in paragraphs (j) and (k) of this section. A wall stress of more than 90,500 p.s.i. is not permitted. The minimum wall thickness for any cylinder may not be less than 0.225 inch.

(1) Calculation of the stress for cylinders must be made by the following formula:

$$S=[P(1.3D^2+0.4d^2)]/(D^2-d^2)$$

Where:

S=Wall stress in pounds per square inch;

P=Minimum test pressure, at least ⅝ service pressure;

D=Outside diameter in inches;

d=Inside diameter in inches.

(2) Each cylinder must meet the following additional requirement which assumes a cylinder horizontally supported at its two ends and uniformly loaded over its entire length. This load consists of the weight per inch of length of the straight cylindrical portion filled with water compressed to the specified test pressure. The wall thickness must be increased when necessary to meet this additional requirement:

(i) The sum of two times the maximum tensile stress in the bottom fibers due to bending (see paragraph (d)(2)(ii) of this section), plus the maximum tensile stress in the same fibers due to hydrostatic testing (see paragraph

(d)(2)(iii) of this section) may not exceed 80 percent of the minimum yield strength of the steel at this maximum stress.

(ii) The following formula must be used to calculate the maximum tensile stress due to bending:

$S=Mc/I$

Where:

S=Tensile stress in pounds per square inch;
M=Bending moment in inch-pounds ($wl^2/8$);
I=Moment of inertia—0.04909 (D^4-d^4) in inches fourth;
c=Radius (D/2) of cylinder in inches;
w=Weight per inch of cylinder filled with water;
l=Length of cylinder in inches;
D=Outside diameter in inches;
d=Inside diameter in inches.

(iii) The following formula must be used to calculate the maximum longitudinal tensile stress due to hydrostatic test pressure:

$S=A_1 P/A_2$

Where:

S=Tensile stress in pounds per square inch;
A_1=Internal area in cross section of cylinder in square inches;
P=Hydrostatic test pressure in pounds per square, inch;
A_2=Area of metal in cross section of cylinder in square inches.

(e) *Heat treatment.* Each completed cylinder must be uniformly and properly heat treated prior to testing, as follows:

(1) Each cylinder must be heated and held at the proper temperature for at least one hour per inch of thickness based on the maximum thickness of the cylinder and then quenched in a suitable liquid medium having a cooling rate not in excess of 80 percent of water. The steel temperature on quenching must be that recommended for the steel analysis, but it must never exceed 1750 °F.

(2) After quenching, each cylinder must be reheated to a temperature below the transformation range but not less than 1050 °F., and must be held at this temperature for at least one hour per inch of thickness based on the maximum thickness of the cylinder. Each cylinder must then be cooled under conditions recommended for the steel.

(f) *Openings.* Openings in cylinders must comply with the following:

(1) Openings are permitted on heads only.

(2) The size of any centered opening in a head may not exceed one half the outside diameter of the cylinder.

(3) Openings in a head must have ligaments between openings of at least three times the average of their hole diameter. No off-center opening may exceed 2.625 inches in diameter.

(4) All openings must be circular.

(5) All openings must be threaded. Threads must be in compliance with the following:

(i) Each thread must be clean cut, even, without any checks, and to gauge.

(ii) Taper threads, when used, must be the American Standard Pipe thread (NPT) type and must be in compliance with the requirements of NBS Handbook H–28, Part II, Section VII.

(iii) Taper threads conforming to National Gas Taper thread (NGT) standards must be in compliance with the requirements of NBS Handbook H–28, Part II, Sections VII and IX.

(iv) Straight threads conforming with National Gas Straight thread (NGS) standards are authorized. These threads must be in compliance with the requirements of NBS Handbook H–28, Part II, Sections VII and IX.

(g) *Hydrostatic test.* Each cylinder must be tested at an internal pressure by the water jacket method or other suitable method, conforming to the following requirements:

(1) The testing apparatus must be operated in a manner that will obtain accurate data. Any pressure gauge used must permit reading to an accuracy of one percent. Any expansion gauge used must permit reading of the total expansion to an accuracy of one percent.

(2) Any internal pressure applied to the cylinder after heat treatment and before the official test may not exceed 90 percent of the test pressure.

(3) The pressure must be maintained sufficiently long to assure complete expansion of the cylinder. In no case may the pressure be held less than 30 seconds.

(4) If, due to failure of the test apparatus, the required test pressure cannot be maintained, the test must be repeated at a pressure increased by 10 percent or 100 p.s.i., whichever is lower or, the cylinder must be reheat treated.

(5) Permanent volumetric expansion of the cylinder may not exceed 10 percent of its total volumetric expansion at the required test pressure.

(6) Each cylinder must be tested to at least ⅔ times its service pressure.

(h) *Ultrasonic examination.* After the hydrostatic test, the cylindrical section of each vessel must be examined in accordance with ASTM Standard A–388–67 using the angle beam technique. The equipment used must be calibrated to detect a notch equal to five percent of the design minimum wall thickness. Any discontinuity indication greater than that produced by the five percent notch must be cause for rejection of the cylinder unless the discontinuity is repaired within the requirements of this specification.

(i) *Basic requirements for tension and Charpy impact tests.* Cylinders must be subjected to a tension and Charpy impact as follows:

(1) When the cylinders are heat treated in a batch furnace, two tension specimens and three Charpy impact specimens must be tested from one of the cylinders or a test ring from each batch. The lot size represented by these tests may not exceed 200 cylinders.

(2) When the cylinders are heat treated in a continuous furnace, two tension specimens and three Charpy impact specimens must be tested from one of the cylinders or a test ring from each four hours or less of production. However, in no case may a test lot based on this production period exceed 200 cylinders.

(3) Each specimen for the tension and Charpy impact tests must be taken from the side wall of a cylinder or from a ring which has been heat treated with the finished cylinders of which the specimens must be representative. The axis of the specimens must be parallel to the axis of the cylinder. Each cylinder or ring specimen for test must be of the same diameter, thickness, and metal as the finished cylinders they represent. A test ring must be at least 24 inches long with ends covered during the heat treatment process so as to simulate the heat treatment process of the finished cylinders it represents.

(4) A test cylinder or test ring need represent only one of the heats in a furnace batch provided the other heats in the batch have previously been tested and have passed the tests and that such tests do not represent more than 200 cylinders from any one heat.

(5) The test results must conform to the requirements specified in paragraphs (j) and (k) of this section.

(6) When the test results do not conform to the requirements specified, the cylinders represented by the tests may be reheat treated and the tests repeated. Paragraph (i)(5) of this section applies to any retesting.

(j) *Basic conditions for acceptable physical testing.* The following criteria must be followed to obtain acceptable physical test results:

(1) Each tension specimen must have a gauge length of two inches with a width not exceeding one and one-half inches. Except for the grip ends, the specimen may not be flattened. The grip ends may be flattened to within one inch of each end of the reduced section.

(2) A specimen may not be heated after heat treatment specified in paragraph (d) of this section.

(3) The yield strength in tension must be the stress corresponding to a permanent strain of 0.2 percent of the gage length.

(i) This yield strength must be determined by the ''offset'' method or the ''extension under load'' method described in ASTM Standard E8.

(ii) For the ''extension under load'' method, the total strain (or extension under load) corresponding to the stress at which the 0.2 percent permanent strain occurs may be determined with sufficient accuracy by calculating the elastic extension of the gage length under appropriate load and adding thereto 0.2 percent of the gage length. Elastic extension calculations must be based on an elastic modulus of 30,000,000. However, when the degree of accuracy of this method is questionable the entire stress-strain diagram must be plotted and the yield strength determined from the 0.2 percent offset.

(iii) For the purpose of strain measurement, the initial strain must be set with the specimen under a stress of 12,000 p.s.i. and the strain indicator reading set at the calculated corresponding strain.

(iv) The cross-head speed of the testing machine may not exceed ⅛ inch per minute during the determination of yield strength.

(4) Each impact specimen must be Charpy V-notch type size 10 mm x 10 mm taken in accordance with paragraph 11 of ASTM Standard A–333–67. When a reduced size specimen is used, it must be the largest size obtainable.

(k) *Acceptable physical test results.* Results of physical tests must conform to the following:

(1) The tensile strength may not exceed 155,000 p.s.i.

(2) The elongation must be at least 16 percent for a two-inch gage length.

(3) The Charpy V-notch impact properties for the three impact specimens which must be tested at 0 °F may not be less than the values shown as follows:

Size of specimen (mm)	Average value for acceptance (3 specimens)	Minimum value (1 specimen only of the 3)
10.0x10.0	25.0 ft. lbs.	20.0 ft. lbs.
10.0x7.5	21.0 ft. lbs.	17.0 ft. lbs.
10.0x5.0	17.0 ft. lbs.	14.0 ft. lbs.

(4) After the final heat treatment, each vessel must be hardness tested on the cylindrical section. The tensile strength equivalent of the hardness number obtained may not be more than 165,000 p.s.i. (Rc 36). When the result of a hardness test exceeds the maximum permitted, two or more retests may be made; however, the hardness number obtained in each retest may not exceed the maximum permitted.

(l) *Rejected cylinders.* Reheat treatment is authorized for rejected cylinders. However, each reheat treated cylinder must subsequently pass all the prescribed tests. Repair by welding is not authorized.

(m) *Markings.* Marking must be done by stamping into the metal of the cylinder. All markings must be legible and located on a shoulder.

(n) *Inspector's report.* In addition to the requirements of §178.35, the inspector's report for the physical test report, must indicate the average value for three specimens and the minimum value for one specimen for each lot number.

§178.46 Specification 3AL seamless aluminum cylinders.

(a) *Size and service pressure.* A DOT 3AL cylinder is a seamless aluminum cylinder with a maximum water capacity of 1000 pounds and minimum service pressure of 150 psig.

(b) *Authorized material and identification of material.* The material of construction must meet the following conditions:

(1) Starting stock must be cast stock or traceable to cast stock.

(2) Material with seams, cracks, laminations, or other defects likely to weaken the finished cylinder may not be used.

(3) Material must be identified by a suitable method that will identify the alloy, the aluminum producer's cast number, the solution heat treat batch number and the lot number.

(4) The material must be of uniform quality. Only the following heat treatable aluminum alloys in Table 1 and 2 are permitted as follows:

TABLE 1.—CHEMICAL COMPOSITION LIMITS

[Chemical composition (in weight percent)]

Aluminum Assoc. alloy designation No.	Si	Fe	Cu	Mn	Mg	Cr	Zn	Ti	Pb	Bi	Other [1]		A1
											Each	Total	
6351	0.7–1.3	0.50	0.10	0.40–0.80	0.40–0.80	.....	0.20	0.20	0.01	0.01	0.05	0.15	Remainder.
6061	0.40–0.80	0.70	0.15–0.40	0.15	0.80–1.20	0.04–0.35	0.25	0.15	0.01	0.01	0.05	0.15	Remainder.

[1] Analysis is regularly made only for the elements for which specific limits are shown, except for unalloyed aluminum. If, however, the presence of other elements is suspected to be, or in the course of routine analysis is indicated to be in excess of specified limits, further analysis is made to determine that these other elements are not in excess of the amounts specified. (Aluminum Association Standards and Data.)

TABLE 2.—MECHANICAL PROPERTY LIMITS

Alloy and temper	Tensile strength—PSI		Elongation—percent minimum for 2″ or 4D[1] size specimen
	Ultimate—minimum	Yield—minimum	
6351–T6	42,000	37,000	[2]14
6061–T6	38,000	35,000	[2]14

[1] "D" represents specimen diameters. When the cylinder wall is greater than 3/16 inch thick, a retest without reheat treatment using the 4D size specimen is authorized if the test using the 2 inch size specimen fails to meet elongation requirements.
[2] When cylinder wall is not over 3/16-inch thick, 10 percent elongation is authorized when using a 24t x 6t size test specimen.

(5) All starting stock must be 100 percent ultrasonically inspected, along the length at right angles to the central axis from two positions at 90° to one another. The equipment and continuous scanning procedure must be capable of detecting and rejecting internal defects such as cracks which have an ultrasonic response greater than that of a calibration block with a 5/64-inch diameter flat bottomed hole.

(6) Cast stock must have uniform equiaxed grain structure not to exceed 500 microns maximum.

(7) Any starting stock not complying with the provisions of paragraphs (b)(1) through (b)(6) of this section must be rejected.

(c) *Manufacture.* Cylinders must be manufactured in accordance with the following requirements:

(1) Cylinder shells must be manufactured by the backward extrusion method and have a cleanliness level adequate to ensure proper inspection. No fissure or other defect is acceptable that is likely to weaken the finished cylinder below the design strength requirements. A reasonably smooth and uniform surface finish is required. If not originally free from such defects, the surface may be machined or otherwise conditioned to eliminate these defects.

(2) Thickness of the cylinder base may not be less than the prescribed minimum wall thickness of the cylindrical shell. The cylinder base must have a basic torispherical, hemispherical, or ellipsoidal interior base configuration where the dish radius is no greater than 1.2 times the inside diameter of the shell. The knuckle radius may not be less than 12 percent of the inside diameter of the shell. The interior base contour may deviate from the true torispherical, hemispherical or ellipsoidal configuration provided that—

(i) Any areas of deviation are accompanied by an increase in base thickness;

(ii) All radii of merging surfaces are equal to or greater than the knuckle radius;

(iii) Each design has been qualified by successfully passing the cycling tests in this paragraph (c); and

(iv) Detailed specifications of the base design are available to the inspector.

(3) For free standing cylinders, the base thickness must be at least two times the minimum wall thickness along the line of contact between the cylinder base and the floor when the cylinders are in the vertical position.

(4) Welding or brazing is prohibited.

(5) Each new design and any significant change to any acceptable design must be qualified for production by testing prototype samples as follows:

(i) Three samples must be subjected to 100,000 pressure reversal cycles between zero and service pressure or 10,000 pressure reversal cycles between zero and test pressure, at a rate not in excess of 10 cycles per minute without failure.

(ii) Three samples must be pressurized to destruction and failure may not occur at less than 2.5 times the marked cylinder service pressure. Each cylinder must remain in one piece. Failure must initiate in the cylinder sidewall in a longitudinal direction. Rate of pressurization may not exceed 200 psi per second.

(6) In this specification "significant change" means a 10 percent or greater change in cylinder wall thickness, service pressure, or diameter; a 30 percent or greater change in water capacity or base thickness; any change in material;

over 100 percent increase in size of openings; or any change in the number of openings.

(d) *Wall thickness.* The minimum wall thickness must be such that the wall stress at the minimum specified test pressure will not exceed 80 percent of the minimum yield strength nor exceed 67 percent of the minimum ultimate tensile strength as verified by physical tests in paragraph (i) of this section. The minimum wall thickness for any cylinder with an outside diameter greater than 5 inches must be 0.125 inch. Calculations must be made by the following formula:

$$S=[P(1.3D^2+0.4d^2)]/(D^2-d^2)$$

Where:

S=Wall stress in pounds per square inch;

P=Prescribed minimum test pressure in pounds per square inch (see paragraph (g) of this section);

D=Outside diameter in inches; and

d=Inside diameter in inches.

(e) *Openings.* Openings must comply with the following requirements:

(1) Openings are permitted in heads only.

(2) The size of any centered opening in a head may not exceed one-half the outside diameter of the cylinder.

(3) Other openings are permitted in the head of a cylinder if:

(i) Each opening does not exceed 2.625 inches in diameter, or one-half the outside diameter of the cylinder; whichever is less;

(ii) Each opening is separated from each other by a ligament; and

(iii) Each ligament which separates two openings must be at least three times the average of the diameters of the two openings.

(4) All openings must be circular.

(5) All openings must be threaded. Threads must comply with the following:

(i) Each thread must be clean cut, even, without checks, and to gauge.

(ii) Taper threads, when used, must conform to one of the following:

(A) American Standard Pipe Thread (NPT) type, conforming to the requirements of Federal Standard H–28, Section 7;

(B) National Gas Taper Thread (NGT) type, conforming to the requirements of Federal Standard H–28, Sections 7 and 9; or

(C) Other taper threads conforming to other standards may be used provided the length is not less than that specified for NPT threads.

(iii) Straight threads, when used, must conform to one of the following:

(A) National Gas Straight Thread (NGS) type, conforming to the requirements of Federal Standard H–28, Sections 7 and 9;

(B) Unified Thread (UN) type, conforming to the requirements of Federal Standard H–28, Section 2;

(C) Controlled Radius Root Thread (UN) type, conforming to the requirements of Federal Standard H–28, Section 4; or

(D) Other straight threads conforming to other recognized standards may be used provided that the requirements in paragraph (e)(5)(iv) of this section are met.

(iv) All straight threads must have at least 6 engaged threads, a tight fit, and a factor of safety in shear of at least 10 at the test pressure of the cylinder. Shear stress must be calculated by using the appropriate thread shear area in accordance with Federal Standard H–28, Appendix A5, Section 3.

(f) *Heat treatment.* Prior to any test, all cylinders must be subjected to a solution heat treatment and aging treatment appropriate for the aluminum alloy used.

(g) *Hydrostatic test.* Each cylinder must be subjected to an internal test pressure using the water jacket equipment and method or other suitable equipment and method and comply with the following requirements:

(1) The testing apparatus must be operated in a manner so as to obtain accurate data. The pressure gauge used must permit reading to an accuracy of one percent. The expansion gauge must permit reading the total expansion to an accuracy of either one percent or 0.1 cubic centimeter.

(2) The test pressure must be maintained for a sufficient period of time to assure complete expansion of the cylinder. In no case may the pressure be held less than 30 seconds. If, due to failure of the test apparatus, the required test pressure cannot be maintained, the test may be repeated at a pressure

increased by 10 percent or 100 psi, whichever is lower. If the test apparatus again fails to maintain the test pressure, the cylinder being tested must be rejected. Any internal pressure applied to the cylinder before any official test may not exceed 90 percent of the test pressure.

(3) The minimum test pressure is the greatest of the following:

(i) 450 psi regardless of service pressure;

(ii) Two times the service pressure for cylinders having service pressure less than 500 psi; or

(iii) Five-thirds times the service pressure for cylinders having a service pressure of at least 500 psi.

(4) Permanent volumetric expansion may not exceed 10 percent of total volumetric expansion at test pressure.

(h) *Flattening test.* One cylinder taken at random out of each lot must be subjected to a flattening test as follows:

(1) The test must be between knife edges, wedge shaped, having a 60° included angle, and rounded in accordance with the following table. The longitudinal axis of the cylinder must be at an angle 90° to the knife edges during the test. The flattening test table is as follows:

TABLE 3.—FLATTENING TEST TABLE

Cylinder wall thickness in inches	Radius in inches
Under .150	.500
.150 to .249	.875
.250 to .349	1.500
.350 to .449	2.125
.450 to .549	2.750
.550 to .649	3.500
.650 to .749	4.125

(2) An alternate bend test in accordance with ASTM E 290 using a mandrel diameter not more than 6 times the wall thickness is authorized to qualify lots that fail the flattening test of this section without reheat treatment. If used, this test must be performed on two samples from one cylinder taken at random out of each lot of 200 cylinders or less.

(3) Each test cylinder must withstand flattening to nine times the wall thickness without cracking. When the alternate bend test is used, the test specimens must remain uncracked when bent inward around a mandrel in the direction of curvature of the cylinder wall until the interior edges are at a distance apart not greater than the diameter of the mandrel.

(i) *Mechanical properties test.* Two test specimens cut from one cylinder representing each lot of 200 cylinders or less must be subjected to the mechanical properties test, as follows:

(1) The results of the test must conform to at least the minimum acceptable mechanical property limits for aluminum alloys as specified in paragraph (b) of this section.

(2) Specimens must be 4D bar or gauge length 2 inches with width not over 1½ inch taken in the direction of extrusion approximately 180° from each other; provided that gauge length at least 24 times thickness with width not over 6 times thickness is authorized, when cylinder wall is not over 3/16 inch thick. The specimen, exclusive of grip ends, may not be flattened. Grip ends may be flattened to within one inch of each end of the reduced section. When the size of the cylinder does not permit securing straight specimens, the specimens may be taken in any location or direction and may be straightened or flattened cold by pressure only, not by blows. When such specimens are used, the inspector's report must show that the specimens were so taken and prepared. Heating of specimens for any purpose is forbidden.

(3) The yield strength in tension must be the stress corresponding to a permanent strain of 0.2 percent of the gauge length.

(i) The yield strength must be determined by either the ''offset'' method or the ''extension under load'' method as prescribed in ASTM Standard B–557.

(ii) In using the ''extension under load'' method, the total strain (or ''extension under load'') corresponding to the stress at which the 0.2 percent permanent strain occurs may be determined with sufficient accuracy by calculating the elastic extension of the gauge length under appropriate load and adding thereto 0.2 percent of the gauge length. Elastic extension calculations must be based on an elastic modulus of 10,000,000 psi. In the event of controversy, the entire stress-strain diagram must be plotted and the yield

strength determined from the 0.2 percent offset.

(iii) For the purpose of strain measurement, the initial strain must be set while the specimen is under a stress of 6,000 psi, the strain indicator reading being set at the calculated corresponding strain.

(iv) Cross-head speed of the testing machine may not exceed ⅛ inch per minute during yield strength determination.

(j) *Rejected cylinder.* Reheat treatment of rejected cylinders is authorized one time. Subsequent thereto, cylinders must pass all prescribed tests to be acceptable.

(k) *Duties of inspector.* In addition to the requirements of § 178.35, the inspector shall:

(1) Verify compliance with the provisions of paragraph (b) of this section by:

(i) Performing or witnessing the performance of the chemical analyses on each melt or cast lot or other unit of starting material; or

(ii) Obtaining a certified chemical analysis from the material or cylinder manufacturer for each melt, or cast of material; or

(iii) Obtaining a certified check analysis on one cylinder out of each lot of 200 cylinders or less, if a certificate containing data to indicate compliance with the material specification is obtained.

(2) The inspector shall verify ultrasonic inspection of all material by inspection or by obtaining the material producer's certificate of ultrasonic inspection. Ultrasonic inspection must be performed or verified as having been performed in accordance with paragraph (c) of this section.

(3) The inspector must also determine that each cylinder complies with this specification by:

(i) Selecting the samples for check analyses performed by other than the material producer;

(ii) Verifying that the prescribed minimum thickness was met by measuring or witnessing the measurement of the wall thickness; and

(iii) Verifying that the identification of material is proper.

(4) Prior to initial production of any design or design change, verify that the design qualification tests prescribed in paragraph (c)(6) of this section have been performed with acceptable results.

(l) *Definitions.* (1) In this specification, a ''lot'' means a group of cylinders successively produced having the same:

(i) Size and configuration;

(ii) Specified material of construction;

(iii) Process of manufacture and heat treatment;

(iv) Equipment of manufacture and heat treatment; and

(v) Conditions of time, temperature and atmosphere during heat treatment.

(2) In no case may the lot size exceed 200 cylinders, but any cylinder processed for use in the required destructive physical testing need not be counted as being one of the 200.

(m) *Inspector's report.* In addition to the information required by § 178.35, the record of chemical analyses must also include the alloy designation, and applicable information on iron, titanium, zinc, magnesium and any other applicable element used in the construction of the cylinder.

§ 178.47 Specification 4DS welded stainless steel cylinders for aircraft use.

(a) *Type, size, and service pressure.* A DOT 4DS cylinder is either a welded stainless steel sphere (two seamless hemispheres) or circumferreentially welded cylinder both with a water capacity of not over 100 pounds and a service pressure of at least 500 but not over 900 pounds per square inch.

(b) *Steel.* Types 304, 321 and 347 stainless steel are authorized with proper welding procedure. A heat of steel made under the specifications in Table 1 in this paragraph (b), check chemical analysis of which is slightly out of the specified range, is acceptable, if satisfactory in all other respects, provided the tolerances shown in Table 2 in this paragraph (b) are not exceeded, except as approved by Associate Administrator. The following chemical analyses are authorized:

TABLE 1.—AUTHORIZED MATERIALS

	Stainless steels		
	304 (percent)	321 (percent)	347 (percent)
Carbon (max)	0.08	0.08	0.08
Manganese (max)	2.00	2.00	2.00
Phosphorus (max)	.030	.030	.030
Sulphur (max)	.030	.030	.030
Silicon (max)	.75	.75	.75
Nickel	8.0/11.0	9.0/13.0	9.0/13.0
Chromium	18.0/20.0	17.0/20.0	17.0/20.0
Molybdenum			
Titanium		(1)	
Columbium			(2)

[1] Titanium may not be more than 5C and not more than 0.60%.
[2] Columbium may not be less than 10C and not more than 1.0%.

TABLE 2.—CHECK ANALYSIS TOLERANCES

Element	Limit or maximum specified (percent)	Tolerance (percent) over the maximum limit or under the minimum limit	
		Under minimum limit	Over maximum limit
Carbon	To 0.15 incl	0.01	0.01
Manganese	Over 1.15 to 2.50 incl	0.05	0.05
Phosphorus[1]	All ranges	.....	.01
Sulphur	All ranges	.....	.01
Silicon	Over 0.30 to 1.00 incl	.05	.05
Nickel	Over 5.30 to 10.00 incl	.10	.10
	Over 10.00 to 14.00 incl	.15	.15
Chromium	Over 15.00 to 20.00 incl	.20	.20
Titanium	All ranges	.05	.05
Columbium	All ranges	.05	.05

[1]Rephosphorized steels not subject to check analysis for phosphorus.

(c) *Identification of material.* Materials must be identified by any suitable method.

(d) *Manufacture.* Cylinders must be manufactured using equipment and processes adequate to ensure that each cylinder produced conforms to the requirements of this subpart. No defect is permitted that is likely to weaken the finished cylinder appreciably, a reasonably smooth and uniform surface finish is required. No abrupt change in wall thickness is permitted. Welding procedures and operators must be qualified in accordance with CGA Pamphlet C–3. All seams of the sphere or cylinder must be fusion welded. Seams must be of the butt type and means must be provided for accomplishing complete penetration of the joint.

(e) *Attachments.* Attachments to the container are authorized by fusion welding provided that such attachments are made of weldable stainless steel in accordance with paragraph (b) of this section.

(f) *Wall thickness.* The minimum wall thickness must be such that the wall stress at the minimum specified test pressure may not be over 60,000 psi. A minimum wall thickness of 0.040 inch is required for any diameter container. Calculations must be made by the following formulas:

(1) Calculation for sphere must be made by the formula:

$S=PD/4tE$

Where:

S=Wall stress in pounds per square inch;

P=Test pressure prescribed for water jacket test, i.e., at least two times service pressure, in pounds per square inch;

D=Outside diameter in inches;

t=Minimum wall thickness in inches;

E=0.85 (provides 85 percent weld efficiency factor which must be applied in the girth weld area and heat zones which zone must extend a distance of 6 times wall thickness

from center of weld); E=1.0 (for all other areas).

(2) Calculation for a cylinder must be made by the formula:

$S=[P(1.3D^2+0.4d^2)]/(D^2-d^2)$

Where:

S=Wall stress in pounds per square inch;

P=Test pressure prescribed for water jacket test, i.e., at least two times service pressure, in pounds per square inch;

D=Outside diameter in inches;

d=Inside diameter in inches.

(g) *Heat treatment.* The seamless hemispheres and cylinders may be stress relieved or annealed for forming. Welded container must be stress relieved at a temperature of 775° F +/− 25° after process treatment and before hydrostatic test.

(h) *Openings in container.* Openings must comply with the following:

(1) Each opening in the container must be provided with a fitting, boss or pad of weldable stainless steel securely attached to the container by fusion welding.

(2) Attachments to a fitting, boss, or pad must be adequate to prevent leakage. Threads must comply with the following:

(i) Threads must be clean cut, even, without checks, and tapped to gauge.

(ii) Taper threads to be of length not less than as specified for American Standard taper pipe threads.

(iii) Straight threads having at least 4 engaged threads, to have tight fit and calculated shear strength at least 10 times the test pressure of the container; gaskets required, adequate to prevent leakage.

(i) *Process treatment.* Each container must be hydraulically pressurized in a water jacket to at least 100 percent, but not more than 110 percent, of the test pressure and maintained at this pressure for a minimum of 3 minutes. Total and permanent expansion must be recorded and included in the inspector's report.

(j) *Hydrostatic test.* Each cylinder must successfully withstand a hydrostatic test as follows:

(1) The test must be by water-jacket, operated so as to obtain accurate data. The pressure gauge must permit reading to an accuracy of 1 percent. The expansion gauge must permit reading of total expansion to an accuracy either of 1 percent or 0.1 cubic centimeter.

(2) Pressure must be maintained for at least 30 seconds and sufficiently longer to ensure complete expansion. If, due to failure of the test apparatus, the test pressure cannot be maintained, the test may be repeated at a pressure increased by 10 percent or 100 pounds per square inch, whichever is the lower.

(3) Permanent volumetric expansion may not exceed 10 percent of total volumetric expansion at test pressure.

(4) Each container must be tested to at least 2 times service pressure.

(5) Container must then be inspected. Any wall thickness lower than that required by paragraph (f) of this section must be cause for rejection. Bulges and cracks must be cause for rejection. Welded joint defects exceeding requirements of paragraph (k) of this section must be cause for rejection.

(k) *Radiographic inspection.* Radiographic inspection is required on all welded joints which are subjected to internal pressure, except that at the discretion of the disinterested inspector, openings less than 25 percent of the container diameter need not be subjected to radiographic inspection. Evidence of any defects likely to seriously weaken the container is cause for rejection. Radiographic inspection must be performed subsequent to the hydrostatic test.

(l) *Burst test.* One container taken at random out of 200 or less must be hydrostatically tested to destruction. Rupture pressure must be included as part of the inspector's report.

(m) *Flattening test.* A flattening test must be performed as follows:

(1) For spheres the test must be at the weld between parallel steel plates on a press with welded seam at right angles to the plates. Test one sphere taken at random out of each lot of 200 or less after the hydrostatic test. Any projecting appurtenances may be cut off (by mechanical means only) prior to crushing.

(2) For cylinders the test must be between knife edges, wedge shaped, 60° angle, rounded to ½-inch radius. Test one cylinder taken at random out of

each lot of 200 or less, after the hydrostatic test.

(n) *Acceptable results for flattening and burst tests.* Acceptable results for flattening and burst tests are as follows:

(1) Flattening required to 50 percent of the original outside diameter without cracking.

(2) Burst pressure must be at least 3 times the service pressure.

(o) *Rejected containers.* Repair of welded seams by welding prior to process treatment is authorized. Subsequent thereto, containers must be heat treated and pass all prescribed tests.

(p) *Duties of inspector.* In addition to the requirements of §178.35, the inspector must verify that all tests are conducted at temperatures between 60 °F and 90 °F.

(q) *Marking.* Markings must be stamped plainly and permanently on a permanent attachment or on a metal nameplate permanently secured to the container by means other than soft solder.

§178.50 Specification 4B welded or brazed steel cylinders.

(a) *Type, size, and service pressure.* A DOT 4B is a welded or brazed steel cylinder with longitudinal seams that are forged lap-welded or brazed and with water capacity (nominal) not over 1,000 pounds and a service pressure of at least 150 but not over 500 pounds per square inch. Cylinders closed in by spinning process are not authorized.

(b) *Steel.* Open-hearth, electric or basic oxygen process steel of uniform quality must be used. Content percent may not exceed the following: Carbon, 0.25; phosphorus, 0.045; sulphur, 0.050.

(c) *Identification of material.* Material must be identified by any suitable method except that plates and billets for hotdrawn cylinders must be marked with the heat number.

(d) *Manufacture.* Cylinders must be manufactured using equipment and processes adequate to ensure that each cylinder produced conforms to the requirements of this subpart. No defect is permitted that is likely to weaken the finished cylinder appreciably. A reasonably smooth and uniform surface finish is required. Exposed bottom welds on cylinders over 18 inch long must be protected by footrings. Welding procedures and operators must be qualified in accordance with CGA Pamphlet C–3. Seams must be made as follows:

(1) *Welded or brazed circumferential seams.* Heads attached by brazing must have a driving fit with the shell, unless the shell is crimped, swedged, or curled over the skirt or flange of the head, and be thoroughly brazed until complete penetration by the brazing material of the brazed joint is secured. Depth of brazing from end of shell must be at least four times the thickness of shell metal.

(2) *Longitudinal seams in shells.* Longitudinal seams must be forged lap welded, by copper brazing, by copper alloy brazing, or by silver alloy brazing. Copper alloy composition must be: Copper, 95 percent minimum; Silicon, 1.5 percent to 3.85 percent; Manganese, 0.25 percent to 1.10 percent. The melting point of the silver alloy brazing material must be in excess of 1000° F. When brazed, the plate edge must be lapped at least eight times the thickness of plate, laps being held in position, substantially metal to metal, by riveting or electric spot-welding; brazing must be done by using a suitable flux and by placing brazing material on one side of seam and applying heat until this material shows uniformly along the seam of the other side.

(e) *Welding or brazing.* Only the attachment of neckrings, footrings, handles, bosses, pads, and valve protection rings to the tops and bottoms of cylinders by welding or brazing is authorized. Such attachments and the portion of the container to which they are attached must be made of weldable steel, the carbon content of which may not exceed 0.25 percent except in the case of 4130X steel which may be used with proper welding procedure.

(f) *Wall thickness.* The wall thickness of the cylinder must comply with the following requirements:

(1) For cylinders with outside diameters over 6 inches the minimum wall thickness must be 0.090 inch. In any case, the minimum wall thickness must be such that calculated wall stress at minimum test pressure (paragraph (i)(4) of this section) may not exceed the following values:

(i) 24,000 pounds per square inch for cylinders without longitudinal seam.

(ii) 22,800 pounds per square inch for cylinders having copper brazed or silver alloy brazed longitudinal seam.

(iii) 18,000 pounds per square inch for cylinders having forged lapped welded longitudinal seam.

(2) Calculation must be made by the formula:

$$S=[P(1.3D^2+0.4d^2)]/(D^2-d^2)$$

Where:

S=wall stress in pounds per square inch;

P=minimum test pressure prescribed for water jacket test or 450 pounds per square inch whichever is the greater;

D=outside diameter in inches;

d=inside diameter in inches.

(g) *Heat treatment.* Cylinder body and heads, formed by drawing or pressing, must be uniformly and properly heat treated prior to tests.

(h) *Opening in cylinders.* Openings in cylinders must conform to the following:

(1) Each opening in cylinders, except those for safety devices, must be provided with a fitting, boss, or pad, securely attached to cylinder by brazing or by welding or by threads. Fitting, boss, or pad must be of steel suitable for the method of attachment employed, and which need not be identified or verified as to analysis except that if attachment is by welding, carbon content may not exceed 0.25 percent. If threads are used, they must comply with the following:

(i) Threads must be clean cut, even without checks, and tapped to gauge.

(ii) Taper threads to be of length not less than as specified for American Standard taper pipe threads.

(iii) Straight threads, having at least 4 engaged threads, to have tight fit and calculated shear strength at least 10 times the test pressure of the cylinder; gaskets required, adequate to prevent leakage.

(iv) A brass fitting may be brazed to the steel boss or flange on cylinders used as component parts of hand fire extinguishers.

(2) The closure of a fitting, boss, or pad must be adequate to prevent leakage.

(i) *Hydrostatic test.* Cylinder must withstand a hydrostatic test as follows:

(1) The test must be by water-jacket, or other suitable method, operated so as to obtain accurate data. The pressure gauge must permit reading to an accuracy of 1 percent. The expansion gauge must permit reading of total expansion to an accuracy either of 1 percent or 0.1 cubic centimeter.

(2) Pressure must be maintained for at least 30 seconds and sufficiently longer to ensure complete expansion. Any internal pressure applied after heat-treatment and previous to the official test may not exceed 90 percent of the test pressure. If, due to failure of the test apparatus, the test pressure cannot be maintained, the test may be repeated at a pressure increased by 10 percent or 100 pounds per square inch, whichever is the lower.

(3) Permanent volumetric expansion may not exceed 10 percent of total volumetric expansion at test pressure.

(4) Cylinders must be tested as follows:

(i) At least one cylinder selected at random out of each lot of 200 or less must be tested as outlined in paragraphs (i)(1), (i)(2), and (i)(3) of this section to at least two times service pressure.

(ii) All cylinders not tested as outlined in paragraph (i)(4)(i) of this section must be examined under pressure of at least two times service pressure and show no defect.

(j) *Flattening test.* After the hydrostatic test, a flattening test must be performed on one cylinder taken at random out or each lot of 200 or less, by placing the cylinder between wedge shaped knife edges having a 60° included angle, rounded to ½-inch radius. The longitudinal axis of the cylinder must be at a 90-degree angle to knife edges during the test. For lots of 30 or less, flattening tests are authorized to be made on a ring at least 8 inches long cut from each cylinder and subjected to same heat treatment as the finished cylinder.

(k) *Physical test.* A physical test must be conducted to determine yield strength, tensile strength, elongation, and reduction of area of material as follows:

(1) The test is required on 2 specimens cut from 1 cylinder, or part thereof heat-treated as required, taken at random out of each lot of 200 or less. For lots of 30 or less, physical tests are authorized to be made on a ring at least 8 inches long cut from each cylinder and subjected to same heat treatment as the finished cylinder.

(2) Specimens must conform to the following:

(i) A gauge length of 8 inches with a width of not over 1½ inches, a gauge length of 2 inches with a width of not over 1½ inches, or a gauge length at least 24 times the thickness with a width not over 6 times the thickness is authorized when a cylinder wall is not over 3⁄16 inch thick.

(ii) The specimen, exclusive of grip ends, may not be flattened. Grip ends may be flattened to within one inch of each end of the reduced section.

(iii) When size of cylinder does not permit securing straight specimens, the specimens may be taken in any location or direction and may be straightened or flattened cold, by pressure only, not by blows. When specimens are so taken and prepared, the inspector's report must show in connection with record of physical tests detailed information in regard to such specimens.

(iv) Heating of a specimen for any purpose is not authorized.

(3) The yield strength in tension must be the stress corresponding to a permanent strain of 0.2 percent of the gauge length. The following conditions apply:

(i) The yield strength must be determined by either the ''offset'' method or the ''extension under load'' method as prescribed in ASTM Standard E8.

(ii) In using the ''extension under load'' method, the total strain (or ''extension under load'') corresponding to the stress at which the 0.2 percent permanent strain occurs may be determined with sufficient accuracy by calculating the elastic extension of the gauge length under appropriate load and adding thereto 0.2 percent of the gauge length. Elastic extension calculations must be based on an elastic modulus of 30,000,000. In the event of controversy, the entire stress-strain diagram must be plotted and the yield strength determined from the 0.2 percent offset.

(iii) For the purpose of strain measurement, the initial strain must be set while the specimen is under a stress of 12,000 pounds per square inch, and strain indicator reading must be set at the calculated corresponding strain.

(iv) Cross-head speed of the testing machine may not exceed ⅛ inch per minute during yield strength determination.

(l) *Acceptable results for physical and flattening tests.* Either of the following is an acceptable result:

(1) An elongation of at least 40 percent for a 2-inch gauge length or at least 20 percent in other cases and yield strength not over 73 percent of tensile strength. In this instance, a flattening test is not required.

(2) When cylinders are constructed of lap welded pipe, flattening test is required, without cracking, to 6 times the wall thickness. In such case, the rings (crop ends) cut from each end of pipe, must be tested with the weld 45° or less from the point of greatest stress. If a ring fails, another from the same end of pipe may be tested.

(m) *Rejected cylinders.* Reheat treatment is authorized for rejected cylinder. Subsequent thereto, cylinders must pass all prescribed tests to be acceptable. Repair of brazed seams by brazing and welded seams by welding is authorized.

(n) *Markings.* Markings must be stamped plainly and permanently in any of the following locations on the cylinder:

(1) On shoulders and top heads when they are not less than 0.087-inch thick.

(2) On side wall adjacent to top head for side walls which are not less than 0.090 inch thick.

(3) On a cylindrical portion of the shell which extends beyond the recessed bottom of the cylinder, constituting an integral and non-pressure part of the cylinder.

(4) On a metal plate attached to the top of the cylinder or permanent part thereof; sufficient space must be left on the plate to provide for stamping at least six retest dates; the plate must be at least 1⁄16-inch thick and must be attached by welding, or by brazing. The

brazing rod must melt at a temperature of 1100 °F. Welding or brazing must be along all the edges of the plate.

(5) On the neck, neckring, valve boss, valve protection sleeve, or similar part permanently attached to the top of the cylinder.

(6) On the footring permanently attached to the cylinder, provided the water capacity of the cylinder does not exceed 25 pounds.

[Amdt. 178–114, 61 FR 25942, May 23, 1996, as amended at 62 FR 51561, Oct. 1, 1997]

§ 178.51 Specification 4BA welded or brazed steel cylinders.

(a) *Type, size, and service pressure.* A DOT 4BA cylinder is a cylinder, either spherical or cylindrical in shape, with a water capacity of 1,000 pounds or less and a service pressure of at least 225 and not over 500 pounds per square inch. Closures made by the spinning process are not authorized.

(1) Spherical type cylinders must be made from two seamless hemispheres joined by the welding of one circumferential seam.

(2) Cylindrical type cylinders must be of circumferentially welded or brazed construction.

(b) *Steel.* The steel used in the construction of the cylinder must be as specified in Table 1 of Appendix A to this part.

(c) *Identification of material.* Material must be identified by any suitable method except that plates and billets for hotdrawn cylinders must be marked with the heat number.

(d) *Manufacture.* Cylinders must be manufactured using equipment and processes adequate to ensure that each cylinder produced conforms to the requirements of this subpart. No defect is permitted that is likely to weaken the finished cylinder appreciably. A reasonably smooth and uniform surface finish is required. Exposed bottom welds on cylinders over 18 inches long must be protected by footrings.

(1) Seams must be made as follows:

(i) Minimum thickness of heads and bottoms must be not less than 90 percent of the required thickness of the side wall.

(ii) Circumferential seams must be made by welding or by brazing. Heads must be attached by brazing and must have a driving fit with the shell, unless the shell is crimped, swedged or curled over the skirt or flange of the head and must be thoroughly brazed until complete penetration by the brazing material of the brazed joint is secured. Depth of brazing from end of the shell must be at least four times the thickness of shell metal.

(iii) Longitudinal seams in shells must be made by copper brazing, copper alloy brazing, or by silver alloy brazing. Copper alloy composition must be: Copper 95 percent minimum, Silicon 1.5 percent to 3.85 percent, Manganese 0.25 percent to 1.10 percent. The melting point of the silver alloy brazing material must be in excess of 1,000 °F. The plate edge must be lapped at least eight times the thickness of plate, laps being held in position, substantially metal to metal, by riveting or by electric spot-welding. Brazing must be done by using a suitable flux and by placing brazing material on one side of seam and applying heat until this material shows uniformly along the seam of the other side. Strength of longitudinal seam: Copper brazed longitudinal seam must have strength at least 3½ times the strength of the steel wall.

(2) Welding procedures and operators must be qualified in accordance with CGA Pamphlet C–3.

(e) *Welding and brazing.* Only the welding or brazing of neckrings, footrings, handles, bosses, pads, and valve protection rings to the tops and bottoms of cylinders is authorized. Provided that such attachments and the portion of the container to which they are attached are made of weldable steel, the carbon content of which may not exceed 0.25 percent except in the case of 4130× steel which may be used with proper welding procedure.

(f) *Wall thickness.* The minimum wall thickness of the cylinder must meet the following conditions:

(1) For any cylinder with an outside diameter of greater than 6 inches, the minimum wall thickness is 0.078 inch. In any case the minimum wall thickness must be such that the calculated wall stress at the minimum test pressure may not exceed the lesser value of any of the following:

(i) The value shown in Table I of Appendix A to this part, for the particular material under consideration;

(ii) One-half of the minimum tensile strength of the material determined as required in paragraph (j) of this section;

(iii) 35,000 pounds per square inch; or

(iv) Further provided that wall stress for cylinders having copper brazed longitudinal seams may not exceed 95 percent of any of the above values. Measured wall thickness may not include galvanizing or other protective coating.

(2) Cylinders that are cylindrical in shape must have the wall stress calculated by the formula:

$$S=[P(1.3D^2+0.4d^2)]/(D^2-d^2)$$

Where:

S=wall stress in pounds per square inch;

P=minimum test pressure prescribed for water jacket test;

D=outside diameter in inches;

d=inside diameter in inches.

(3) Cylinders that are spherical in shape must have the wall stress calculated by the formula:

$$S=PD/4tE$$

Where:

S=wall stress in pounds per square inch;

P=minimum test pressure prescribed for water jacket test;

D=outside diameter in inches;

t=minimum wall thickness in inches;

E=0.85 (provides 85 percent weld efficiency factor which must be applied in the girth weld area and heat affected zones which zone must extend a distance of 6 times wall thickness from center line of weld);

E=1.0 (for all other areas).

(4) For a cylinder with a wall thickness less than 0.100 inch, the ratio of tangential length to outside diameter may not exceed 4.1.

(g) *Heat treatment.* Cylinders must be heat treated in accordance with the following requirements:

(1) Each cylinder must be uniformly and properly heat treated prior to test by the applicable method shown in Table I of Appendix A to this Part. Heat treatment must be accomplished after all forming and welding operations, except that when brazed joints are used, heat treatment must follow any forming and welding operations, but may be done before, during or after the brazing operations.

(2) Heat treatment is not required after the welding or brazing of weldable low carbon parts to attachments of similar material which have been previously welded or brazed to the top or bottom of cylinders and properly heat treated, provided such subsequent welding or brazing does not produce a temperature in excess of 400° F in any part of the top or bottom material.

(h) *Openings in cylinders.* Openings in cylinders must comply with the following requirements:

(1) Any opening must be placed on other than a cylindrical surface.

(2) Each opening in a spherical type cylinder must be provided with a fitting, boss, or pad of weldable steel securely attached to the container by fusion welding.

(3) Each opening in a cylindrical type cylinder must be provided with a fitting, boss, or pad, securely attached to container by brazing or by welding.

(4) If threads are used, they must comply with the following:

(i) Threads must be clean-cut, even, without checks and tapped to gauge.

(ii) Taper threads must be of a length not less than that specified for American Standard taper pipe threads.

(iii) Straight threads, having at least 4 engaged threads, must have a tight fit and a calculated shear strength of at least 10 times the test pressure of the cylinder. Gaskets, adequate to prevent leakage, are required.

(i) *Hydrostatic test.* Each cylinder must successfully withstand a hydrostatic test, as follows:

(1) The test must be by water jacket, or other suitable method, operated so as to obtain accurate data. A pressure gauge must permit reading to an accuracy of 1 percent. An expansion gauge must permit reading of total expansion to an accuracy of either 1 percent or 0.1 cubic centimeter.

(2) Pressure must be maintained for at least 30 seconds and sufficiently longer to ensure complete expansion. Any internal pressure applied after

heat treatment and previous to the official test may not exceed 90 percent of the test pressure.

(3) Permanent volumetric expansion may not exceed 10 percent of the total volumetric expansion at test pressure.

(4) Cylinders must be tested as follows:

(i) At least one cylinder selected at random out of each lot of 200 or less must be tested as outlined in paragraphs (i)(1), (i)(2), and (i)(3) of this section to at least two times service pressure.

(ii) All cylinders not tested as outlined in paragraph (i)(4)(i) of this section must be examined under pressure of at least two times service pressure and show no defect.

(j) *Physical test.* A physical test must be conducted to determine yield strength, tensile strength, elongation, and reduction of area of material, as follows:

(1) The test is required on 2 specimens cut from one cylinder or part thereof having passed the hydrostatic test and heat-treated as required, taken at random out of each lot of 200 or less. Physical tests for spheres are required on 2 specimens cut from flat representative sample plates of the same heat taken at random from the steel used to produce the spheres. This flat steel from which 2 specimens are to be cut must receive the same heat treatment as the spheres themselves. Sample plates must be taken from each lot of 200 or less spheres.

(2) Specimens must conform to the following:

(i) A gauge length of 8 inches with a width not over 1½ inches, or a gauge length of 2 inches with a width not over 1½ inches, or a gauge length at least 24 times the thickness with a width not over 6 times the thickness is authorized when a cylinder wall is not over 3⁄16 inch thick.

(ii) The specimen, exclusive of grip ends, may not be flattened. Grip ends may be flattened to within one inch of each end of the reduced section.

(iii) When size of the cylinder does not permit securing straight specimens, the specimens may be taken in any location or direction and may be straightened or flattened cold, by pressure only, not by blows. When specimens are so taken and prepared, the inspector's report must show in connection with record of physical tests detailed information in regard to such specimens.

(iv) Heating of a specimen for any purpose is not authorized.

(3) The yield strength in tension must be the stress corresponding to a permanent strain of 0.2 percent of the gauge length. The following conditions apply:

(i) The yield strength must be determined by either the ''offset'' method or the ''extension under load'' method as prescribed in ASTM Standard E8.

(ii) In using the ''extension under load'' method, the total strain (or ''extension under load''), corresponding to the stress at which the 0.2 percent permanent strain occurs may be determined with sufficient accuracy by calculating the elastic extension of the gauge length under appropriate load and adding thereto 0.2 percent of the gauge length. Elastic extension calculations must be based on an elastic modulus of 30,000,000. In the event of controversy, the entire stress-strain diagram must be plotted and the yield strength determined from the 0.2 percent offset.

(iii) For the purpose of strain measurement, the initial strain reference must be set while the specimen is under a stress of 12,000 pounds per square inch, and the strain indicator reading must be set at the calculated corresponding strain.

(iv) Cross-head speed of the testing machine may not exceed ⅛ inch per minute during yield strength determination.

(k) *Elongation.* Physical test specimens must show at least a 40 percent elongation for a 2-inch gauge length or at least 20 percent in other cases. Except that these elongation percentages may be reduced numerically by 2 for 2-inch specimens, and by 1 in other cases, for each 7,500 pounds per square inch increment of tensile strength above 50,000 pounds per square inch to a maximum of four such increments.

(l) *Tests of welds.* Except for brazed seams, welds must be tested as follows:

(1) *Tensile test.* A specimen must be cut from one cylinder of each lot of 200

or less, or welded test plate. The welded test plate must be of one of the heats in the lot of 200 or less which it represents, in the same condition and approximately the same thickness as the cylinder wall except that in no case must it be of a lesser thickness than that required for a quarter size Charpy impact specimen. The weld must be made by the same procedures and subjected to the same heat treatment as the major weld on the cylinder. The specimen must be taken from across the major seam and must be prepared and tested in accordance with and must meet the requirements of CGA Pamphlet C–3. Should this specimen fail to meet the requirements, specimens may be taken from two additional cylinders or welded test plates from the same lot and tested. If either of the latter specimens fail to meet the requirements, the entire lot represented must be rejected.

(2) *Guided bend test.* A root bend test specimen must be cut from the cylinder or welded test plate, used for the tensile test specified in paragraph (l)(1) of this section. Specimens must be taken from across the major seam and must be prepared and tested in accordance with and must meet the requirements of CGA Pamphlet C–3.

(3) *Alternate guided-bend test.* This test may be used and must be as required by CGA Pamphlet C–3. The specimen must be bent until the elongation at the outer surface, adjacent to the root of the weld, between the lightly scribed gage lines a to b, must be at least 20 percent, except that this percentage may be reduced for steels having a tensile strength in excess of 50,000 pounds per square inch, as provided in paragraph (k) of this section.

(m) *Rejected cylinders.* Reheat treatment is authorized for rejected cylinders. Subsequent thereto, cylinders must pass all prescribed tests to be acceptable. Repair of brazed seams by brazing and welded seams by welding is authorized.

(n) *Markings.* Markings must be stamped plainly and permanently in one of the following locations on the cylinder:

(1) On shoulders and top heads not less than 0.087 inch thick.

(2) On side wall adjacent to top head for side walls not less than 0.090 inch thick.

(3) On a cylindrical portion of the shell which extends beyond the recessed bottom of the cylinder constituting an integral and non-pressure part of the cylinder.

(4) On a plate attached to the top of the cylinder or permanent part thereof; sufficient space must be left on the plate to provide for stamping at least six retest dates; the plate must be at least 1/16 inch thick and must be attached by welding, or by brazing at a temperature of at least 1100 °F., throughout all edges of the plate.

(5) On the neck, neckring, valve boss, valve protection sleeve, or similar part permanently attached to the top of the cylinder.

(6) On the footring permanently attached to the cylinder, provided the water capacity of the cylinder does not exceed 25 pounds.

§178.53 Specification 4D welded steel cylinders for aircraft use.

(a) *Type, size, and service pressure.* A DOT 4D cylinder is a welded steel sphere (two seamless hemispheres) or circumferentially welded cylinder (two seamless drawn shells) with a water capacity not over 100 pounds and a service pressure of at least 300 but not over 500 pounds per square inch. Cylinders closed in by spinning process are not authorized.

(b) *Steel.* Open-hearth or electric steel of uniform and weldable quality must be used. Content may not exceed the following: Carbon, 0.25; phosphorus, 0.045; sulphur, 0.050, except that the following steels commercially known as 4130X and Type 304, 316, 321, and 347 stainless steels may be used with proper welding procedure. A heat of steel made under Table 1 in this paragraph (b), check chemical analysis of which is slightly out of the specified range, is acceptable, if satisfactory in all other respects, provided the tolerances shown in Table 2 in this paragraph (b) are not exceeded, except as approved by the Associate Administrator. The following chemical analyses are authorized:

TABLE 1.—4130X STEEL

4130X	Percent
Carbon	0.25/0.35.
Manganese	0.40/0.60.
Phosphorus	0.04 max.
Sulphur	0.05 max
Silicon	0.15/0.35.

TABLE 1.—4130X STEEL—Continued

4130X	Percent
Chromium	0.80/1.10.
Molybdenum	0.15/0.25.
Zirconium	None.
Nickel	None.

TABLE 2.—AUTHORIZED STAINLESS STEELS

	Stainless steels			
	304 (percent)	316 (percent)	321 (percent)	347 (percent)
Carbon (max)	0.08	0.08	0.08	0.08
Manganese (max)	2.00	2.00	2.00	2.00
Phosphorus (max)	.030	.045	.030	.030
Sulphur (max)	.030	.030	.030	.030
Silicon (max)	.75	1.00	.75	.75
Nickel	8.0/11.0	10.0/14.0	9.0/13.0	9.0/13.0
Chromium	18.0/20.0	16.0/18.0	17.0/20.0	17.0/20.0
Molybdenum	.....	2.0/3.0	.....	.....
Titanium	.....	.....	(1)	.....
Columbium	.....	.....	.....	(2)

[1] Titanium may not be less than 5C and not more than 0.60%.
[2] Columbium may not be less than 10C and not more than 1.0%.

TABLE 3.—CHECK ANALYSIS TOLERANCES

Element	Limit or maximum specified (percent)	Tolerance (percent) over the maximum limit or under the minimum limit	
		Under minimum limit	Over maximum limit
Carbon	To 0.15 incl	0.01	0.01
	Over 0.15 to 0.40 incl	.03	.04
Manganese	To 0.60 incl	.03	.03
	Over 1.15 to 2.50 incl	.05	.05
Phosphorus[1]	All ranges	.....	.01
Sulphur	All ranges	.....	.01
Silicon	To 0.30 incl	.02	.03
	Over 0.30 to 1.00 incl	.05	.05
Nickel	Over 5.30 to 10.00 incl	.10	.10
	Over 10.00 to 14.00 incl	.15	.15
Chromium	To 0.90 incl	.03	.03
	Over 0.90 to 2.10 incl	.05	.05
	Over 15.00 to 20.00 incl	.20	.20
Molybdenum	To 0.20 incl	.01	.01
	Over 0.20 to 0.40 incl	.02	.02
	Over 1.75 to 3.0 incl	.10	.10
Titanium	All ranges	.05	.05
Columbium	All ranges	.05	.05

[1] Rephosphorized steels not subject to check analysis for phosphorus.

(c) *Identification of material.* Material must be identified by any suitable method except that plates and billets for hotdrawn cylinders must be marked with the heat number.

(d) *Manufacture.* Cylinders must be manufactured using equipment and processes adequate to ensure that each cylinder produced conforms to the requirements of this subpart. No defect is permitted that is likely to weaken the finished container appreciably. A reasonably smooth and uniform surface finish is required. Welding procedures and operators must be qualified in accordance with CGA Pamphlet C–3.

(e) *Wall thickness.* The wall stress at the minimum test pressure may not exceed 24,000 pounds per square inch, except where steels commercially known as 4130X, types 304, 316, 321, and 347 stainless steels are used, stress at the

test pressures may not exceed 37,000 pounds per square inch. The minimum wall thickness for any container having a capacity of 1,100 cubic inches or less is 0.04 inch. The minimum wall thickness for any container having a capacity in excess of 1,100 cubic inches is 0.095 inch. Calculations must be done by the following:

(1) Calculation for a ''sphere'' must be made by the formula:

$S=PD/4tE$

Where:

S=wall stress in pounds per square inch;

P=test pressure prescribed for water jacket test, i.e., at least two times service pressure, in pounds per square inch;

D=outside diameter in inches;

t=minimum wall thickness in inches;

E=0.85 (provides 85 percent weld efficiency factor which must be applied in the girth weld area and heat affected zones which zone must extend a distance of 6 times wall thickness from center line of weld);

E=1.0 (for all other areas).

(2) Calculation for a cylinder must be made by the formula:

$S=[P(1.3D^2+0.4d^2)]/(D^2-d^{T12})$

Where:

S=wall stress in pounds per square inch;

P=test pressure prescribed for water jacket test, i.e., at least two times service pressure, in pounds per square inch;

D=outside diameter in inches;

d=inside diameter in inches.

(f) *Heat treatment.* The completed cylinders must be uniformly and properly heat-treated prior to tests.

(g) *Openings in container.* Openings in cylinders must comply with the following:

(1) Each opening in the container, except those for safety devices, must be provided with a fitting, boss, or pad, securely attached to the container by brazing or by welding or by threads. If threads are used, they must comply with the following:

(i) Threads must be clean cut, even, without checks, and tapped to gauge.

(ii) Taper threads must be of a length not less than that specified for American Standard taper pipe threads.

(iii) Straight threads, having at least 4 engaged threads, must have a tight fit and calculated shear strength of at least 10 times the test pressure of the container. Gaskets, adequate to prevent leakage, are required.

(2) Closure of a fitting, boss, or pad must be adequate to prevent leakage.

(h) *Hydrostatic test.* Each cylinder must successfully withstand a hydrostatic test, as follows:

(1) The test must be by water-jacket, or other suitable method, operated so as to obtain accurate data. A pressure gauge must permit a reading to an accuracy of 1 percent. An expansion gauge must permit reading of total expansion to an accuracy of either 1 percent or 0.1 cubic centimeter.

(2) Pressure must be maintained for at least 30 seconds and sufficiently longer to ensure complete expansion. Any internal pressure applied after heat-treatment and previous to the official test may not exceed 90 percent of the test pressure. If, due to failure of the test apparatus, the test pressure cannot be maintained, the test may be repeated at a pressure increased by 10 percent or 100 pounds per square inch, whichever is the lower.

(3) Permanent volumetric expansion may not exceed 10 percent of the total volumetric expansion at test pressure.

(4) Containers must be tested as follows:

(i) Each container to at least 2 times service pressure; or

(ii) One container out of each lot of 200 or less to at least 3 times service pressure. Others must be examined under pressure of 2 times service pressure and show no defects.

(i) *Flattening test for spheres and cylinders.* Spheres and cylinders must be subjected to a flattening test as follows:

(1) One sphere taken at random out of each lot of 200 or less must be subjected to a flattening test as follows:

(i) The test must be performed after the hydrostatic test.

(ii) The test must be between parallel steel plates on a press with a welded seam at right angles to the plates. Any projecting appurtenances may be cut

off (by mechanical means only) prior to crushing.

(2) One cylinder taken at random out of each lot of 200 or less must be subjected to a flattening test, as follows:

(i) The test must be performed after the hydrostatic test.

(ii) The test must be between knife edges, wedge shaped, 60° angle, rounded to ½ inch radius. For lots of 30 or less, physical tests are authorized to be made on a ring at least 8 inches long cut from each cylinder and subjected to the same heat treatment as the finished cylinder.

(j) *Physical test and specimens for spheres and cylinders.* Spheres and cylinders must be subjected to a physical test as follows:

(1) Physical test for spheres are required on 2 specimens cut from a flat representative sample plate of the same heat taken at random from the steel used to produce the sphere. This flat steel from which the 2 specimens are to be cut must receive the same heat-treatment as the spheres themselves. Sample plates must be taken for each lot of 200 or less spheres.

(2) Specimens for spheres must have a gauge length 2 inches with a width not over 1½ inches, or a gauge length at least 24 times the thickness with a width not over 6 times the thickness is authorized when a wall is not over 3⁄16 inch thick.

(3) Physical test for cylinders is required on 2 specimens cut from 1 cylinder taken at random out of each lot of 200 or less. For lots of 30 or less, physical tests are authorized to be made on a ring at least 8 inches long cut from each cylinder and subjected to the same heat treatment as the finished cylinder.

(4) Specimens for cylinders must conform to the following:

(i) A gauge length of 8 inches with a width not over 1½ inches, or a gauge length of 2 inches with a width not over 1½ inches, or a gauge length at least 24 times the thickness with a width not over 6 times the thickness is authorized when a cylinder wall is not over 3⁄16 inch thick.

(ii) The specimen, exclusive of grip ends, may not be flattened. Grip ends may be flattened to within 1 inch of each end of the reduced section. Heating of the specimen for any purpose is not authorized.

(5) The yield strength in tension must be the stress corresponding to a permanent strain of 0.2 percent of the gauge length. The following conditions apply:

(i) The yield strength must be determined by either the ''offset'' method or the ''extension under load'' method as prescribed in ASTM Standard E8.

(ii) In using the ''extension under load'' method, the total strain (or ''extension under load'') corresponding to the stress at which the 0.2 percent permanent strain occurs may be determined with sufficient accuracy by calculating the elastic extension of the gauge length under appropriate load and adding thereto 0.2 percent of the gauge length. Elastic extension calculations must be based on an elastic modulus of 30,000,000. In the event of controversy, the entire stress-strain diagram must be plotted and the yield strength determined from the 0.2 percent offset.

(iii) For the purpose of strain measurement, the initial strain must be set while the specimen is under a stress of 12,000 pounds per square inch and the strain indicator reading being set at the calculated corresponding strain.

(iv) Cross-head speed of the testing machine may not exceed ⅛ inch per minute during yield strength determination.

(k) *Acceptable results for physical and flattening tests.* Either of the following is an acceptable result:

(1) An elongation of at least 40 percent for a 2 inch gauge length or at least 20 percent in other cases and yield strength not over 73 percent of tensile strength. In this instance, the flattening test is not required.

(2) An elongation of at least 20 percent for a 2 inch gauge length or 10 percent in other cases. Flattening is required to 50 percent of the original outside diameter without cracking.

(l) *Rejected cylinders.* Reheat-treatment is authorized for rejected cylinders. Subsequent thereto, containers must pass all prescribed tests to be acceptable. Repair of welded seams by welding prior to reheat-treatment is authorized.

(m) *Marking.* Marking on each container by stamping plainly and permanently are only authorized where the metal is at least 0.09 inch thick, or on a metal nameplate permanently secured to the container by means other than soft solder, or by means that would not reduce the wall thickness.

§178.55 Specification 4B240ET welded or brazed cylinders.

(a) *Type, spinning process, size and service pressure.* A DOT 4B240ET cylinder is a brazed type cylinder made from electric resistance welded tubing. The maximum water capacity of this cylinder is 12 pounds or 333 cubic inches and the service must be 240 pounds per square inch. The maximum outside diameter of the shell must be five inches and maximum length of the shell is 21 inches. Cylinders closed in by a spinning process are authorized.

(b) *Steel.* Open-hearth, basic oxygen, or electric steel of uniform quality must be used. Plain carbon steel content may not exceed the following: Carbon, 0.25; phosphorus, 0.045; sulfur, 0.050. The addition of other elements for alloying effect is prohibited.

(c) *Identification of material.* Material must be identified by any suitable method.

(d) *Manufacture.* Cylinders must be manufactured using equipment and processes adequate to ensure that each cylinder produced conforms to the requirements of this subpart. No defect is permitted that is likely to weaken the finished cylinder appreciably. A reasonably smooth and uniform surface finish is required. Heads may be attached to shells by lap brazing or may be formed integrally. The thickness of the bottom of cylinders welded or formed by spinning is, under no condition, to be less than two times the minimum wall thickness of the cylindrical shell. Such bottom thicknesses must be measured within an area bounded by a line representing the points of contact between the cylinder and the floor when the cylinder is in a vertical position. Seams must conform to the following:

(1) Circumferential seams must be by brazing only. Heads must be attached to shells by the lap brazing method and must overlap not less than four times the wall thickness. Brazing material must have a melting point of not less than 1000° F. Heads must have a driving fit with the shell unless the shell is crimped, swedged, or curled over the skirt or flange of the head and be thoroughly brazed until complete penetration of the joint by the brazing material is secured. Brazed joints may be repaired by brazing.

(2) Longitudinal seams in shell must be by electric resistance welded joints only. No repairs to longitudinal joints is permitted.

(3) Welding procedures and operators must be qualified in accordance with CGA Pamphlet C–3.

(e) *Welding or brazing.* Only the attachment, by welding or brazing, to the tops and bottoms of cylinders of neckrings, footrings, handles, bosses, pads, and valve protection rings is authorized. Provided that such attachments and the portion of the container to which they are attached are made of weldable steel, the carbon content of which may not exceed 0.25 percent.

(f) *Wall thickness.* The wall stress must be at least two times the service pressure and may not exceed 18,000 pounds per square inch. The minimum wall thickness is 0.044 inch. Calculation must be made by the following formula:

$$S=[P(1.3D^2+0.4d^2)]/(D^2-d^2)$$

Where:

S=wall stress in pounds per square inch;
P=2 times service pressure;
D=outside diameter in inches;
d=inside diameter in inches.

(g) *Heat treatment.* Heads formed by drawing or pressing must be uniformly and properly heat treated prior to tests. Cylinders with integral formed heads or bases must be subjected to a normalizing operation. Normalizing and brazing operations may be combined, provided the operation is carried out at a temperature in excess of the upper critical temperature of the steel.

(h) *Openings in cylinders.* Openings in cylinders must comply with the following:

(1) Each opening in cylinders, except those for safety devices, must be provided with a fitting, boss, or pad, securely attached to the cylinder by

brazing or by welding or by threads. A fitting, boss, or pad must be of steel suitable for the method of attachment employed, and which need not be identified or verified as to analysis, except that if attachment is by welding, carbon content may not exceed 0.25 percent. If threads are used, they must comply with the following:

(i) Threads must be clean cut, even without checks, and tapped to gauge.

(ii) Taper threads to be of length not less than as specified for American Standard taper pipe threads.

(iii) Straight threads, having at least 4 engaged threads, to have tight fit and calculated shear strength at least 10 times the test pressure of the cylinder; gaskets required, adequate to prevent leakage.

(2) Closure of a fitting, boss, or pad must be adequate to prevent leakage.

(i) *Hydrostatic test.* Each cylinder must successfully withstand a hydrostatic test as follows:

(1) The test must be by water-jacket, or other suitable method, operated so as to obtain accurate data. The pressure gauge must permit reading to an accuracy of 1 percent. The expansion gauge must permit reading of total expansion to an accuracy of either 1 percent or 0.1 cubic centimeter.

(2) Pressure must be maintained for at least 30 seconds and sufficiently longer to ensure complete expansion. Any internal pressure applied after heat-treatment and previous to the official test may not exceed 90 percent of the test pressure. If, due to failure of the test apparatus, the test pressure cannot be maintained, the test may be repeated at a pressure increased by 10 percent or 100 pounds per square inch, whichever is the lower.

(3) Permanent volumetric expansion may not exceed 10 percent of total volumetric expansion at test pressure.

(4) Cylinders must be tested as follows:

(i) At least one cylinder selected at random out of each lot of 200 or less must be tested as outlined in paragraphs (i)(1), (i)(2), and (i)(3) of this section to at least two times service pressure.

(ii) All cylinders not tested as outlined in paragraph (i)(4)(i) of this section must be examined under pressure of at least two times service pressure and show no defect.

(5) Each 1000 cylinders or less successively produced each day must constitute a lot. One cylinder must be selected from each lot and hydrostatically tested to destruction. If this cylinder bursts below five times the service pressure, then two additional cylinders must be selected and subjected to this test. If either of these cylinders fails by bursting below five times the service pressure then the entire lot must be rejected. All cylinders constituting a lot must be of identical size, construction heat-treatment, finish, and quality.

(j) *Flattening test.* Following the hydrostatic test, one cylinder taken at random out of each lot of 200 or less, must be subjected to a flattening test that is between knife edges, wedge shaped, 60° angle, rounded to ½ inch radius.

(k) *Physical test.* A physical test must be conducted to determine yield strength, tensile strength, elongation, and reduction of area of material, as follows:

(1) The test is required on 2 specimens cut from 1 cylinder, or part thereof heat-treated as required, taken at random out of each lot of 200 or less in the case of cylinders of capacity greater than 86 cubic inches and out of each lot of 500 or less for cylinders having a capacity of 86 cubic inches or less.

(2) Specimens must conform to the following:

(i) A gauge length of 8 inches with a width not over 1½ inches, a gauge length of 2 inches with a width not over 1½ inches, or a gauge length at least 24 times the thickness with a width not over 6 times the thickness is authorized when a cylinder wall is not over 3⁄16 inch thick.

(ii) The specimen, exclusive of grip ends, may not be flattened. Grip ends may be flattened to within one inch of each end of the reduced section.

(iii) When size of cylinder does not permit securing straight specimens, the specimens may be taken in any location or direction and may be

straightened or flattened cold by pressure only, not by blows. When specimens are so taken and prepared, the inspector's report must show in connection with record of physical tests detailed information in regard to such specimens.

(iv) Heating of a specimen for any purpose is not authorized.

(3) The yield strength in tension must be the stress corresponding to a permanent strain of 0.2 percent of the gauge length. The following conditions apply:

(i) The yield strength must be determined by either the ''offset'' method or the ''extension under load'' method as prescribed in ASTM Standard E8.

(ii) In using the ''extension under load'' method, the total strain (or ''extension under load'') corresponding to the stress at which the 0.2 percent permanent strain occurs may be determined with sufficient accuracy by calculating the elastic extension of the gauge length under appropriate load and adding thereto 0.2 percent of the gauge length. Elastic extension calculations must be based on an elastic modulus of 30,000,000. In the event of controversy, the entire stress-strain diagram must be plotted and the yield strength determined from the 0.2 percent offset.

(iii) For the purpose of strain measurement, the initial strain must be set while the specimen is under a stress of 12,000 pounds per square inch and the strain indicator reading being set at the calculated corresponding strain.

(iv) Cross-head speed of the testing machine may not exceed ⅛ inch per minute during yield strength determination.

(l) *Acceptable results for physical and flattening tests.* Acceptable results for the physical and flattening tests are an elongation of at least 40 percent for a 2 inch gauge length or at least 20 percent in other cases and a yield strength not over 73 percent of tensile strength. In this instance the flattening test is required, without cracking, to six times the wall thickness with a weld 90° from the direction of the applied load. Two rings cut from the ends of length of pipe used in production of a lot may be used for the flattening test provided the rings accompany the lot which they represent in all thermal processing operations. At least one of the rings must pass the flattening test.

(m) *Leakage test.* All spun cylinders and plugged cylinders must be tested for leakage by gas or air pressure after the bottom has been cleaned and is free from all moisture, subject to the following conditions:

(1) Pressure, approximately the same as but no less than service pressure, must be applied to one side of the finished bottom over an area of at least 1/16 of the total area of the bottom but not less than ¾ inch in diameter, including the closure, for at least 1 minute, during which time the other side of the bottom exposed to pressure must be covered with water and closely examined for indications of leakage. Except as provided in paragraph (n) of this section, cylinders which are leaking must be rejected.

(2) A spun cylinder is one in which an end closure in the finished cylinder has been welded by the spinning process.

(3) A plugged cylinder is one in which a permanent closure in the bottom of a finished cylinder has been effected by a plug.

(4) As a safety precaution, if the manufacturer elects to make this test before the hydrostatic test, he should design his apparatus so that the pressure is applied to the smallest area practicable, around the point of closure, and so as to use the smallest possible volume of air or gas.

(n) *Rejected cylinders.* Repairs of rejected cylinders is authorized. Cylinders that are leaking must be rejected, except that:

(1) Spun cylinders rejected under the provisions of paragraph (m) of this section may be removed from the spun cylinder category by drilling to remove defective material, tapping, and plugging.

(2) Brazed joints may be rebrazed.

(3) Subsequent to the operations noted in paragraphs (n)(1) and (n)(2) of this section, acceptable cylinders must pass all prescribed tests.

(o) *Marking.* Markings on each cylinder must be by stamping plainly and permanently on shoulder, top head, neck or valve protection collar which is permanently attached to the cylinders and forming an integral part

thereof, provided that cylinders not less than 0.090 inch thick may be stamped on the side wall adjacent to top head.

§ 178.56 Specification 4AA480 welded steel cylinders.

(a) *Type, size, and service pressure.* A DOT 4AA480 cylinder is a welded steel cylinder having a water capacity (nominal) not over 1,000 pounds water capacity and a service pressure of 480 pounds per square inch. Closures welded by spinning process not permitted.

(b) *Steel.* The limiting chemical composition of steel authorized by this specification must be as shown in Table I of Appendix A to this part.

(c) *Identification of material.* Material must be identified by any suitable method except that plates and billets for hotdrawn cylinders must be marked with the heat number.

(d) *Manufacture.* Cylinders must be manufactured using equipment and processes adequate to ensure that each cylinder produced conforms to the requirements of this subpart. No defect is permitted that is likely to weaken the finished cylinder appreciably. A reasonably smooth and uniform surface finish is required. Exposed bottom welds on cylinders over 18 inches long must be protected by footrings. Minimum thickness of heads and bottoms may not be less than 90 percent of the required thickness of the side wall. Seams must be made as follows:

(1) Circumferential seams must be welded. Brazing is not authorized.

(2) Longitudinal seams are not permitted.

(3) Welding procedures and operators must be qualified in accordance with CGA Pamphlet C–3.

(e) *Welding.* Only the welding of neckrings, footrings, bosses, pads, and valve protection rings to the tops and bottoms of cylinders is authorized. Provided that such attachments are made of weldable steel, the carbon content of which does not exceed 0.25 percent.

(f) *Wall thickness.* The wall thickness of the cylinder must conform to the following:

(1) For cylinders with an outside diameter over 5 inches, the minimum wall thickness is 0.078 inch. In any case, the minimum wall thickness must be such that the calculated wall stress at the minimum test pressure (in paragraph (i) of this section) may not exceed the lesser value of either of the following:

(i) One-half of the minimum tensile strength of the material determined as required in paragraph (j) of this section; or

(ii) 35,000 pounds per square inch.

(2) Calculation must be made by the formula:

$$S=[P(1.3D^2+0.4d^2)]/(D^2-d^2)$$

Where:

S=wall stress in pounds per square inch;

P=minimum test pressure prescribed for water jacket test;

D=outside diameter in inches;

d=inside diameter in inches.

(3) The ratio of tangential length to outside diameter may not exceed 4.0 for cylinders with a wall thickness less than 0.100 inch.

(g) *Heat treatment.* Each cylinder must be uniformly and properly heat treated prior to tests. Any suitable heat treatment in excess of 1100° F is authorized except that liquid quenching is not permitted. Heat treatment must be accomplished after all forming and welding operations. Heat treatment is not required after welding weldable low carbon parts to attachments of similar material which have been previously welded to the top or bottom of cylinders and properly heat treated, provided such subsequent welding does not produce a temperature in excess of 400 °F., in any part of the top or bottom material.

(h) *Openings in cylinders.* Openings in cylinders must conform to the following:

(1) All openings must be in the heads or bases.

(2) Each opening in the cylinder, except those for safety devices, must be provided with a fitting boss, or pad, securely attached to the cylinder by welding or by threads. If threads are used they must comply with the following:

(i) Threads must be clean-cut, even without checks and cut to gauge.

(ii) Taper threads to be of length not less than as specified for American Standard taper pipe threads.

(iii) Straight threads having at least 6 engaged threads, must have a tight fit and a calculated shear strength at least 10 times the test pressure of the cylinder. Gaskets, adequate to prevent leakage, are required.

(3) Closure of a fitting, boss or pad must be adequate to prevent leakage.

(i) *Hydrostatic test.* Each cylinder must successfully withstand a hydrostatic test as follows:

(1) The test must be by water jacket, or other suitable method, operated so as to obtain accurate data. The pressure gauge must permit reading to an accuracy of 1 percent. The expansion gauge must permit reading of total expansion to an accuracy of either 1 percent or 0.1 cubic centimeter.

(2) Pressure must be maintained for at least 30 seconds or sufficiently longer to assure complete expansion. Any internal pressure applied after heat-treatment and before the official test may not exceed 90 percent of the test pressure. If, due to failure of test apparatus, the test pressure cannot be maintained, the test may be repeated at a pressure increased by 10 percent or 100 pounds per square inch, whichever is lower.

(3) Permanent volumetric expansion may not exceed 10 percent of the total volumetric expansion at test pressure.

(4) Cylinders must be tested as follows:

(i) At least one cylinder selected at random out of each lot of 200 or less must be tested as described in paragraphs (i)(1), (i)(2), and (i)(3) of this section, to at least two times service pressure. If a selected cylinder fails, then two additional specimens must be selected at random from the same lot and subjected to the prescribed test. If either of these fails the test, then each cylinder in that lot must be so tested; and

(ii) Each cylinder not tested as prescribed in paragraph (i)(4)(i) of this section must be examined under pressure of at least two times service pressure and must show no defect. A cylinder showing a defect must be rejected unless it may be requalified under paragraph (m) of this section.

(j) *Physical test.* A physical test must be conducted to determine yield strength, tensile strength, elongation, and reduction of area of material, as follows:

(1) The test is required on 2 specimens cut from one cylinder having passed the hydrostatic test, or part thereof heat-treated as required, taken at random out of each lot of 200 or less.

(2) Specimens must conform to the following:

(i) A gauge length of 8 inches with a width not over 1½ inches, a gauge length of 2 inches with a width not over 1½ inches, or a gauge length at least 24 times the thickness with a width not over 6 times thickness is authorized when the cylinder wall is not over 3⁄16 inch thick.

(ii) The specimen, exclusive of grip ends, may not be flattened. Grip ends may be flattened to within one inch of each end of the reduced section.

(iii) When size of cylinder does not permit securing straight specimens, the specimens may be taken in any location or direction and may be straightened or flattened cold, by pressure only, not by blows. When specimens are so taken and prepared, the inspector's report must show in connection with record of physical tests detailed information in regard to such specimens.

(iv) Heating of a specimen for any purpose is not authorized.

(3) The yield strength in tension must be the stress corresponding to a permanent strain of 0.2 percent of the gauge length. The following conditions apply:

(i) The yield strength must be determined by either the ''offset'' method or the ''extension under load'' method as prescribed in ASTM Standard E8.

(ii) In using the ''extension under load'' method, the total strain (or ''extension under load''), corresponding to the stress at which the 0.2 percent permanent strain occurs may be determined with sufficient accuracy by calculating the elastic extension of the gauge length under appropriate load and adding thereto 0.2 percent of the gauge length. Elastic extension calculations must be based on an elastic modulus of 30,000,000. In the event of controversy, the entire stress-strain

diagram must be plotted and the yield strength determined from the 0.2 percent offset.

(iii) For the purpose of strain measurement, the initial strain reference must be set while the specimen is under a stress of 12,000 pounds per square inch and the strain indicator reading being set at the calculated corresponding strain.

(iv) Cross-head speed of the testing machine may not exceed ⅛ inch per minute during yield strength determination.

(k) *Elongation.* Physical test specimens must show at least a 40 percent elongation for 2-inch gauge lengths or at least a 20 percent elongation in other cases. Except that these elongation percentages may be reduced numerically by 2 for 2-inch specimens and by 1 in other cases for each 7,500 pounds per square inch increment of tensile strength above 50,000 pounds per square inch to a maximum of four such increments.

(l) *Tests of welds.* Welds must be tested as follows:

(1) *Tensile test.* A specimen must be cut from one cylinder of each lot of 200 or less, or a welded test plate. The welded test plate must be of one of the heats in the lot of 200 or less which it represents, in the same condition and approximately the same thickness as the cylinder wall except that it may not be of a lesser thickness than that required for a quarter size Charpy impact specimen. The weld must be made by the same procedures and subjected to the same heat treatment as the major weld on the cylinder. The specimens must be taken across the major seam and must be prepared and tested in accordance with and must meet the requirements of CGA Pamphlet C–3. Should this specimen fail to meet the requirements, specimens may be taken from two additional cylinders or welded test plates from the same lot and tested. If either of the latter specimens fail to meet the requirements, the entire lot represented must be rejected.

(2) *Guided bend test.* A root bend test specimen must be cut from the cylinder or a welded test plate, used for the tensile test specified in paragraph (l)(1) of this section. Specimens must be taken from across the major seam and must be prepared and tested in accordance with and must meet the requirements of CGA Pamphlet C–3.

(3) *Alternate guided-bend test.* This test may be used and must be as required by CGA Pamphlet C–3. The specimen must be bent until the elongation at the outer surface, adjacent to the root of the weld, between the lightly scribed gage lines-a to b, is at least 20 percent, except that this percentage may be reduced for steels having a tensile strength in excess of 50,000 pounds per square inch, as provided in paragraph (k) of this section.

(m) *Rejected cylinders.* Reheat treatment of rejected cylinders is authorized. Subsequent thereto, cylinders must pass all prescribed tests to be acceptable. Repair of welded seams by welding is authorized.

(n) *Markings.* Markings must be stamped plainly and permanently in one of the following locations on the cylinder:

(1) On shoulders and top heads not less than 0.087 inch thick.

(2) On neck, valve boss, valve protection sleeve, or similar part permanently attached to top end of cylinder.

(3) On a plate attached to the top of the cylinder or permanent part thereof: sufficient space must be left on the plate to provide for stamping at least six retest dates: the plate must be at least 1/16 inch thick and must be attached by welding or by brazing at a temperature of at least 1100° F, throughout all edges of the plate.

(4) Variations in location of markings authorized only when necessitated by lack of space.

§ 178.57 Specification 4L welded insulated cylinders.

(a) *Type, size, service pressure, and design service temperature.* A DOT 4L cylinder is a fusion welded insulated cylinder with a water capacity (nominal) not over 1,000 pounds water capacity and a service pressure of at least 40 but not greater than 500 pounds per square inch conforming to the following requirements:

(1) For liquefied hydrogen service, the cylinders must be designed to stand on end, with the axis of the cylindrical portion vertical.

(2) The design service temperature is the coldest temperature for which a cylinder is suitable. The required design service temperatures for each cryogenic liquid is as follows:

Cryogenic liquid	Design service temperature
Argon	Minus 320 °F or colder.
Helium	Minus 452 °F or colder.
Hydrogen	Minus 42 3°F or colder.
Neon	Minus 411 °F or colder.
Nitrogen	Minus 320 °F or colder.
Oxygen	Minus 320 °F or colder.

(b) *Material.* Material use in the construction of this specification must conform to the following:

(1) *Inner containment vessel (cylinder).* Designations and limiting chemical compositions of steel authorized by this specification must be as shown in Table 1 in paragraph (o) of this section.

(2) *Outer jacket.* Steel or aluminum may be used subject to the requirements of paragraph (o)(2) of this section.

(c) *Identification of material.* Material must be identified by any suitable method.

(d) *Manufacture.* Cylinders must be manufactured using equipment and processes adequate to ensure that each cylinder produced conforms to the requirements of this subpart and to the following requirements:

(1) No defect is permitted that is likely to weaken the finished cylinder appreciably. A reasonably smooth and uniform surface finish is required. The shell portion must be a reasonably true cylinder.

(2) The heads must be seamless, concave side to the pressure, hemispherical or ellipsoidal in shape with the major diameter not more than twice the minor diameter. Minimum thickness of heads may not be less than 90 percent of the required thickness of the sidewall. The heads must be reasonably true to shape, have no abrupt shape changes, and the skirts must be reasonably true to round.

(3) The surface of the cylinder must be insulated. The insulating material must be fire resistant. The insulation on non-evacuated jackets must be covered with a steel jacket not less than 0.060-inch thick or an aluminum jacket not less than 0.070 inch thick, so constructed that moisture cannot come in contact with the insulating material. If a vacuum is maintained in the insulation space, the evacuated jacket must be designed for a minimum collapsing pressure of 30 psi differential whether made of steel or aluminum. The construction must be such that the total heat transfer, from the atmosphere at ambient temperature to the contents of the cylinder, will not exceed 0.0005 Btu per hour, per Fahrenheit degree differential in temperature, per pound of water capacity of the cylinder. For hydrogen, cryogenic liquid service, the total heat transfer, with a temperature differential of 520 Fahrenheit degrees, may not exceed that required to vent 30 SCF of hydrogen gas per hour.

(4) For a cylinder having a design service temperature colder than minus 320 °F, a calculation of the maximum weight of contents must be made and that weight must be marked on the cylinder as prescribed in §178.35.

(5) Welding procedures and operators must be qualified in accordance with CGA Pamphlet C–3. In addition, an impact test of the weld must be performed in accordance with paragraph (l) of this section as part of the qualification of each welding procedure and operator.

(e) *Welding.* Welding of the cylinder must be as follows:

(1) All seams of the cylinder must be fusion welded. A means must be provided for accomplishing complete penetration of the joint. Only butt or joggle butt joints for the cylinder seams are authorized. All joints in the cylinder must have reasonably true alignment.

(2) All attachments to the sidewalls and heads of the cylinder must be by fusion welding and must be of a weldable material complying with the impact requirements of paragraph (l) of this section.

(3) For welding the cylinder, each procedure and operator must be qualified in accordance with the sections of CGA Pamphlet C–3 that apply. In addition, impact tests of the weld must be performed in accordance with paragraph (l) of this section as part of the qualification of each welding procedure and operator.

(4) Brazing, soldering and threading are permitted only for joints not made directly to the cylinder body. Threads

must comply with the requirements of paragraph (h) of this section.

(f) *Wall thickness.* The minimum wall thickness of the cylinder must be such that the calculated wall stress at the minimum required test pressure may not exceed the least value of the following:

(1) 45,000 pounds per square inch.

(2) One-half of the minimum tensile strength across the welded seam determined in paragraph (l) of this section.

(3) One-half of the minimum tensile strength of the base metal determined as required in paragraph (j) of this section.

(4) The yield strength of the base metal determined as required in paragraph (l) of this section.

(5) Further provided that wall stress for cylinders having longitudinal seams may not exceed 85 percent of the above value, whichever applies.

(6) Calculation must be made by the following formula:

$$S=[P(1.3D^2+0.4d^2)]/(D^2-d^2)$$

where:

S=wall stress in pounds per square inch;

P=minimum test pressure prescribed for pressure test in pounds per square inch;

D=outside diameter in inches;

d=inside diameter in inches.

(g) *Heat treatment.* Heat treatment is not permitted.

(h) *Openings in cylinder.* Openings in cylinders must conform to the following:

(1) Openings are permitted in heads only. They must be circular and may not exceed 3 inches in diameter or one third of the cylinder diameter, whichever is less. Each opening in the cylinder must be provided with a fitting, boss or pad, either integral with, or securely attached to, the cylinder body by fusion welding. Attachments to a fitting, boss or pad may be made by welding, brazing, mechanical attachment, or threading.

(2) Threads must comply with the following:

(i) Threads must be clean-cut, even, without checks and cut to gauge.

(ii) Taper threads to be of a length not less than that specified for NPT.

(iii) Straight threads must have at least 4 engaged threads, tight fit and calculated shear strength at least 10 times the test pressure of the cylinder. Gaskets, which prevent leakage and are inert to the hazardous material, are required.

(i) *Pressure test.* Each cylinder, before insulating and jacketing, must be examined under a pressure of at least 2 times the service pressure maintained for at least 30 seconds without evidence of leakage, visible distortion or other defect. The pressure gauge must permit reading to an accuracy of 1 percent.

(j) *Physical test.* A physical test must be conducted to determine yield strength, tensile strength, and elongation as follows:

(1) The test is required on 2 specimens selected from material of each heat and in the same condition as that in the completed cylinder.

(2) Specimens must conform to the following:

(i) A gauge length of 8 inches with a width not over 1½ inches, a gauge length of 2 inches with width not over 1½ inches, or a gauge length at least 24 times thickness with a width not over 6 times thickness (authorized when cylinder wall is not over 1/16 inch thick).

(ii) The specimen, exclusive of grip ends, may not be flattened. Grip ends may be flattened to within one inch of each end of the reduced section.

(iii) When size of the cylinder does not permit securing straight specimens, the specimens may be taken in any location or direction and may be straightened or flattened cold by pressure only, not by blows. When specimens are so taken and prepared, the inspector's report must show in connection with record of physical tests detailed information in regard to such specimens.

(iv) Heating of a specimen for any purpose is not authorized.

(3) The yield strength in tension must be the stress corresponding to a permanent strain of 0.2 percent of the gauge length. The following conditions apply:

(i) The yield strength must be determined by either the ''offset'' method or the ''extension under load'' method as prescribed in ASTM Standard E8.

(ii) In using the ''extension under load'' method, the total strain (or ''extension under load''), corresponding to the stress at which the 0.2 percent permanent strain occurs may be determined with sufficient accuracy by calculating the elastic expansion of the gauge length under appropriate load and adding thereto 0.2 percent of the gauge length. Elastic extension calculations must be based on the elastic modulus of the material used. In the event of controversy, the entire stress-strain diagram must be plotted and the yield strength determined from the 0.2 percent offset.

(iii) For the purpose of strain measurement, the initial strain reference must be set while the specimen is under a stress of 12,000 pounds per square inch and the strain indicator reading being set at the calculated corresponding strain.

(iv) Cross-head speed of the testing machine may not exceed ⅛ inch per minute during yield strength determination.

(k) *Acceptable results for physical tests.* Physical properties must meet the limits specified in paragraph (o)(1), Table 1, of this section, for the particular steel in the annealed condition. The specimens must show at least a 20 percent elongation for a 2-inch gage length. Except that the percentage may be reduced numerically by 2 for each 7,500 pounds per square inch increment of tensile strength above 100,000 pounds per square inch to a maximum of 5 such increments. Yield strength and tensile strength must meet the requirements of paragraph (o)(1), Table 1, of this section.

(l) *Tests of welds.* Welds must be tested as follows:

(1) *Tensile test.* A specimen must be cut from one cylinder of each lot of 200 or less, or welded test plate. The welded test plate must be of one of the heats in the lot of 200 or less which it represents, in the same condition and approximately the same thickness as the cylinder wall except that it may not be of a lesser thickness than that required for a quarter size Charpy impact specimen. The weld must be made by the same procedures and subjected to the same heat treatment as the major weld on the cylinder. The specimen must be taken across the major seam and must be prepared and tested in accordance with and must meet the requirements of CGA Pamphlet C–3. Should this specimen fail to meet the requirements, specimens may be taken from two additional cylinders or welded test plates from the same lot and tested. If either of the latter specimens fails to meet the requirements, the entire lot represented must be rejected.

(2) *Guided bend test.* A ''root'' bend test specimen must be cut from the cylinder or welded test plate, used for the tensile test specified in paragraph (l)(1) of this section and from any other seam or equivalent welded test plate if the seam is welded by a procedure different from that used for the major seam. Specimens must be taken across the particular seam being tested and must be prepared and tested in accordance with and must meet the requirements of CGA Pamphlet C–3.

(3) *Alternate guided-bend test.* This test may be used and must be as specified in CGA Pamphlet C–3. The specimen must be bent until the elongation at the outer surface, adjacent to the root of the weld, between the lightly scribed gage lines a to b, is at least 20 percent, except that this percentage may be reduced for steels having a tensile strength in excess of 100,000 pounds per square inch, as provided in paragraph (c) of this section.

(4) *Impact tests.* One set of three impact test specimens (for each test) must be prepared and tested for determining the impact properties of the deposited weld metal—

(i) As part of the qualification of the welding procedure.

(ii) As part of the qualification of the operators.

(iii) For each ''heat'' of welding rodor wire used.

(iv) For each 1,000 feet of weld made with the same heat of welding rod or wire.

(v) All impact test specimens must be of the Charpy type, keyhole or milled U-notch, and must conform in all respects to Figure 3 of ASTM E–23–60. Each set of impact specimens must be taken across the weld and have the notch located in the weld metal. When the cylinder material thickness is 2.5 mm or thicker, impact specimens must

be cut from a cylinder or welded test plate used for the tensile or bend test specimens. The dimension along the axis of the notch must be reduced to the largest possible of 10 mm, 7.5 mm, 5 mm or 2.5 mm, depending upon cylinder thickness. When the material in the cylinder or welded test plate is not of sufficient thickness to prepare 2.5 mm impact test specimens, 2.5 mm specimens must be prepared from a welded test plate made from ⅛ inch thick material meeting the requirements specified in paragraph (o)(1), Table 1, of this section and having a carbon analysis of .05 minimum, but not necessarily from one of the heats used in the lot of cylinders. The test piece must be welded by the same welding procedure as used on the particular cylinder seam being qualified and must be subjected to the same heat treatment.

(vi) Impact test specimens must be cooled to the design service temperature. The apparatus for testing the specimens must conform to the requirements of ASTM Standard E–23–60. The test piece, as well as the handling tongs, must be cooled for a length of time sufficient to reach the service temperature. The temperature of the cooling device must be maintained within a range of plus or minus 3° F. The specimen must be quickly transferred from the cooling device to the anvil of the testing machine and broken within a time lapse of not more than six seconds.

(vii) The impact properties of each set of impact specimens may not be less than the values in the following table:

Size of specimen	Minimum impact value required for avg. of each set of three specimens (ft.-lb.)	Minimum impact value permitted on one only of a set of three (ft.-lb.)
10 mm×10 mm	15	10
10 mm×7.5 mm	12.5	8.5
10 mm×5 mm	10	7.0
10 mm×2.5 mm	5	3.5

(viii) When the average value of the three specimens equals or exceeds the minimum value permitted for a single specimen and the value for more than one specimen is below the required average value, or when the value for one specimen is below the minimum value permitted for a single specimen, a retest of three additional specimens must be made. The value of each of these retest specimens must equal or exceed the required average value. When an erratic result is caused by a defective specimen, or there is uncertainty in test procedure, a retest is authorized.

(m) *Radiographic examination.* Cylinders must be subject to a radiographic examination as follows:

(1) The techniques and acceptability of radiographic inspection must conform to the standards set forth in CGA Pamphlet C–3.

(2) One finished longitudinal seam must be selected at random from each lot of 100 or less successively produced and be radiographed throughout its entire length. Should the radiographic examination fail to meet the requirements of paragraph (m)(1) of this section, two additional seams of the same lot must be examined, and if either of these fail to meet the requirements of (m)(1) of this section, only those passing are acceptable.

(n) *Rejected cylinders.* Reheat treatment of rejected cylinders is authorized. Subsequent thereto, cylinders must pass all prescribed tests to be acceptable. Welds may be repaired by suitable methods of fusion welding.

(o) *Authorized materials of construction.* Authorized materials of construction are as follows:

(1) *Inner containment vessel (cylinder).* Electric furnace steel of uniform quality must be used. Chemical analysis must conform to ASTM A240, Type 304 Stainless Steel. A heat of steel made under Table 1 and Table 2 in this paragraph (o)(1) is acceptable, even though its check chemical analysis is slightly out of the specified range, if it is satisfactory in all other respects, provided the tolerances shown in Table 3 in this paragraph (o)(1) are not exceeded. The following chemical analyses and physical properties are authorized:

TABLE 1.—AUTHORIZED MATERIALS

Designation	Chemical analysis, limits in percent
Carbon [1]	0.08 max.
Manganese	2.00 max.
Phosphorus	0.045 max.
Sulphur	0.030 max.
Silicon	1.00 max.
Nickel	8.00–10.50.
Chromium	18.00–20.00.
Molybdenum	None.
Titanium	None.
Columbium	None.

[1] The carbon analysis must be reported to the nearest hundredth of one percent.

TABLE 2.—PHYSICAL PROPERTIES

	Physical properties (annealed)
Tensile strength, p.s.i. (minimum)	75,000
Yield strength, p.s.i. (minimum)	30,000
Elongation in 2 inches (minimum) percent	30.0
Elongation other permissible gauge lengths (minimum) percent	15.0

TABLE 3.—CHECK ANALYSIS TOLERANCES

Elements	Limit or specified range (percent)	Tolerance over the maximum limit or under the minimum limit
Carbon	To 0.030, incl	0.005
	Over 0.30 to 0.20, incl	0.01
Manganese	To 1.00 incl	.03
	Over 1.00 to 3.00, incl	0.04
Phosphorus [1]	To 0.040, incl	0.005
	Over 0.040 to 0.020 incl	0.010
Sulphur	To .40 incl	0.005
Silicon	To 1.00, incl	0.05
Nickel	Over 5.00 to 10.00, incl	0.10
	Over 10.00 to 20.00, incl	0.15
Chromium	Over 15.00 to 20.00, incl	0.20

[1] Rephosphorized steels not subject to check analysis for phosphorus.

(2) *Outer jacket.* (i) Nonflammable cryogenic liquids. Cylinders intended for use in the transportation of nonflammable cryogenic liquid must have an outer jacket made of steel or aluminum.

(ii) Flammable cryogenic liquids. Cylinders intended for use in the transportation of flammable cryogenic liquid must have an outer jacket made of steel.

(p) *Markings.* (1) Markings must be stamped plainly and permanently on shoulder or top head of jacket or on a permanently attached plate or head protective ring.

(2) The letters ''ST'', followed by the design service temperature (for example, ST–423F), must be marked on cylinders having a design service temperature of colder than minus 320° F only. Location to be just below the DOT mark.

(3) The maximum weight of contents, in pounds (for example, ''Max. Content 51 #''), must be marked on cylinders having a design service temperature colder than minus 320° F only. Location to be near symbol.

(4) Special orientation instructions must be marked on the cylinder (for example, THIS END UP), if the cylinder is used in an orientation other than vertical with openings at the top of the cylinder.

(5) If the jacket of the cylinder is constructed of aluminum, the letters ''AL'' must be marked after the service pressure marking. Example: DOT–4L150 AL.

(6) Except for serial number and jacket material designation, each marking prescribed in this paragraph (p) must be duplicated on each cylinder by any suitable means.

(q) *Inspector's report.* In addition to the information required by §178.35, the inspector's reports must contain information on:

(1) The jacket material and insulation type;

(2) The design service temperature

(°F); and

(3) The impact test results, on a lot basis.

§ 178.58 Specification 4DA welded steel cylinders for aircraft use.

(a) *Type, size, and service pressure.* A DOT 4DA is a welded steel sphere (two seamless hemispheres) or a circumferentially welded cylinder (two seamless drawn shells) with a water capacity not over 100 pounds and a service pressure of at least 500 but not over 900 pounds per square inch.

(b) *Steel.* Open-hearth or electric steel of uniform quality must be used. A heat of steel made under Table 1 in this paragraph (b), check chemical analysis of which is slightly out of the specified range, is acceptable, if satisfactory in all other respects, provided the tolerances shown in Table 2 in this paragraph (b) are not exceeded except as approved by the Associate Administrator. The following chemical analyses are authorized:

TABLE 1.—AUTHORIZED MATERIALS

4130	Percent
Carbon	0.28/0.33.
Manganese	0.40/0.60.
Phosphorus	0.040 max.
Sulfur	0.040 max.
Silicon	0.15/0.35.
Chromium	0.80/1.10.
Molybdenum	0.15/0.25.

TABLE 2.—CHECK ANALYSIS TOLERANCES

Element	Limit or maximum specified (percent)	Tolerance (percent) over the maximum limit or under the minimum limit	
		Under minimum limit	Over maximum limit
Carbon	Over 0.15 to 0.40 incl	.03	.04
Manganese	To 0.60 incl	.03	.03
Phosphorus[1]	All ranges		.01
Sulphur	All ranges		.01
Silicon	To 0.30 incl	.02	.03
	Over 0.30 to 1.00 incl	.05	.05
Chromium	To 0.90 incl	.03	.03
	Over 0.90 to 2.10 incl	.05	.05
Molybdenum	To 0.20 incl	.01	.01
	Over 0.20 to 0.40, incl	.02	.02

[1] Rephosphorized steels not subject to check analysis for phosphorus.

(c) *Identification of material.* Materials must be identified by any suitable method except that plates and billets for hot-drawn containers must be marked with the heat number.

(d) *Manufacture.* Cylinders must be manufactured in accordance with the following requirements:

(1) By best appliances and methods. No defect is acceptable that is likely to weaken the finished container appreciably. A reasonably smooth and uniform surface finish is required. No abrupt change in wall thickness is permitted. Welding procedures and operators must be qualified in accordance with CGA Pamphlet C–3.

(2) All seams of the sphere or cylinders must be fusion welded. Seams must be of the butt or joggle butt type and means must be provided for accomplishing complete penetration of the joint.

(e) *Welding.* Attachments to the container are authorized by fusion welding provided that such attachments are made of weldable steel, the carbon content of which may not exceed 0.25 percent except in the case of 4130 steel.

(f) *Wall thickness.* The minimum wall thickness must be such that the wall stress at the minimum specified test pressure may not exceed 67 percent of the minimum tensile strength of the

steel as determined from the physical and burst tests required and may not be over 70,000 p.s.i. For any diameter container, the minimum wall thickness is 0.040 inch. Calculations must be made by the formulas in (f)(1) or (f)(2) of this section:

(1) Calculation for a sphere must be made by the following formula:

$S=PD/4tE$

Where:

S=wall stress in pounds per square inch;

P=test pressure prescribed for water jacket test, i.e., at least 2 times service pressure, in pounds per square inch;

D=outside diameter in inches;

t=minimum wall thickness in inches;

E=0.85 (provides 85 percent weld efficiency factor which must be applied in the girth weld area and heat affected zones which zone must extend a distance of 6 times wall thickness from center line of weld);

E=1.0 (for all other areas).

(2) Calculation for a cylinder must be made by the following formula:

$S=[P(1.3D^2+0.4d^2)]/(D^2-d^2)$

Where:

S=wall stress in pounds per square inch;

P=test pressure prescribed for water jacket test, i.e., at least 2 times service pressure, in pounds per square inch;

D=outside diameter in inches;

d=inside diameter in inches.

(g) *Heat treatment.* The completed containers must be uniformly and properly heat-treated prior to tests. Heat-treatment of containers of the authorized analysis must be as follows:

(1) All containers must be quenched by oil, or other suitable medium except as provided in paragraph (g)(4) of this section.

(2) The steel temperature on quenching must be that recommended for the steel analysis, but may not exceed 1,750° F.

(3) The steel must be tempered at the temperature most suitable for the analysis except that in no case shall the tempering temperature be less than 1,000° F.

(4) The steel may be normalized at a temperature of 1,650° F instead of being quenched, and containers so normalized need not be tempered.

(5) All cylinders, if water quenched or quenched with a liquid producing a cooling rate in excess of 80 percent of the cooling rate of water, must be inspected by the magnetic particle or dye penetrant method to detect the presence of quenching cracks. Any cylinder found to have a quench crack must be rejected and may not be requalified.

(h) *Openings in container.* Openings in the container must comply with the following requirements:

(1) Each opening in the container must be provided with a fitting, boss, or pad of weldable steel securely attached to the container by fusion welding.

(2) Attachments to a fitting, boss, or pad must be adequate to prevent leakage. Threads must comply with the following:

(i) Threads must be clean cut, even, without checks, and tapped to gauge.

(ii) Taper threads to be of length not less than as specified for American Standard taper pipe threads.

(iii) Straight threads, having at least 4 engaged threads, to have tight fit and calculated shear strength at least 10 times the test pressure of the container; gaskets required, adequate to prevent leakage.

(i) *Hydrostatic test.* Each cylinder must successfully withstand a hydrostatic test as follows:

(1) The test must be by water-jacket, or other suitable method, operated so as to obtain accurate data. The pressure gauge must permit reading to an accuracy of 1 percent. The expansion gauge must permit reading of total expansion to accuracy either of 1 percent or 0.1 cubic centimeter.

(2) Pressure must be maintained for at least 30 seconds and sufficiently longer to ensure complete expansion. Any internal pressure applied after heat-treatment and previous to the official test may not exceed 90 percent of the test pressure. If, due to failure of the test apparatus, the test pressure cannot be maintained, the test may be repeated at a pressure increased by 10 percent or 100 pounds per square inch, whichever is the lower.

(3) Permanent volumetric expansion may not exceed 10 percent of total volumetric expansion at test pressure.

(4) Each container must be tested to at least 2 times service pressure.

(j) *Burst test.* One container taken at random out of 200 or less must be hydrostatically tested to destruction. The rupture pressure must be included as part of the inspector's report.

(k) *Flattening test.* Spheres and cylinders must be subjected to a flattening test as follows:

(1) *Flattening test for spheres.* One sphere taken at random out of each lot of 200 or less must be subjected to a flattening test as follows:

(i) The test must be performed after the hydrostatic test.

(ii) The test must be at the weld between the parallel steel plates on a press with a welded seam, at right angles to the plates. Any projecting appurtenances may be cut off (by mechanical means only) prior to crushing.

(2) *Flattening test for cylinders.* One cylinder taken at random out of each lot of 200 or less, must be subjected to a flattening test as follows:

(i) The test must be performed after the hydrostatic test.

(ii) The test must between knife edges, wedge shaped, 60° angle, rounded to ½ inch radius; test

(l) *Radiographic inspection.* Radiographic examinations is required on all welded joints which are subjected to internal pressure, except that at the discretion of the disinterested inspector, openings less than 25 percent of the sphere diameter need not be subjected to radiographic inspection. Evidence of any defects likely to seriously weaken the container must be cause for rejection.

(m) *Physical test and specimens for spheres and cylinders.* Spheres and cylinders must be subjected to a physical test as follows:

(1) A physical test for a sphere is required on 2 specimens cut from a flat representative sample plate of the same heat taken at random from the steel used to produce the sphere. This flat steel from which the 2 specimens are to be cut must receive the same heat-treatment as the spheres themselves. Sample plates to be taken for each lot of 200 or less spheres.

(2) Specimens for spheres have a gauge length of 2 inches with a width not over 1½ inches, or a gauge length at least 24 times thickness with a width not over 6 times thickness is authorized when wall of sphere is not over 3⁄16 inch thick.

(3) A physical test for cylinders is required on 2 specimens cut from 1 cylinder taken at random out of each lot of 200 or less.

(4) Specimens for cylinder must conform to the following:

(i) A gauge length of 8 inches with a width not over 1½ inches, a gauge length of 2 inches with a width not over 1½ inches, a gauge length at least 24 times thickness with a width not over 6 times thickness is authorized when a cylinder wall is not over 3⁄16 inch thick.

(ii) The specimen, exclusive of grip ends, may not be flattened. Grip ends may be flattened to within 1 inch of each end of the reduced section.

(iii) Heating of a specimen for any purpose is not authorized.

(5) The yield strength in tension must be the stress corresponding to a permanent strain of 0.2 percent of the gauge length. The following conditions apply:

(i) The yield strength must be determined by either the ''offset'' method or the ''extension under load'' method as prescribed in ASTM Standard E8.

(ii) In using the ''extension under load'' method, the total strain (or ''extension under load'') corresponding to the stress at which the 0.2 percent permanent strain occurs may be determined with sufficient accuracy by calculating the elastic extension of the gauge length under appropriate load and adding thereto 0.2 percent of the gauge length. Elastic extension calculations must be based on an elastic modulus of 30,000,000. In the event of controversy, the entire stress-strain diagram must be plotted and the yield strength determined from the 0.2 percent offset.

(iii) For the purpose of strain measurement, the initial strain must be set while the specimen is under a stress of 12,000 pounds per square inch and the strain indicator reading being set at the calculated corresponding strain.

(iv) Cross-head speed of the testing machine may not exceed ⅛ inch per minute during yield strength determination.

(n) *Acceptable results for physical, flattening, and burst tests.* The following are acceptable results of the physical, flattening and burst test:

(1) Elongation must be at least 20 percent for a 2-inch gauge length or 10 percent in other cases.

(2) Flattening is required to 50 percent of the original outside diameter without cracking.

(3) Burst pressure must be at least 3 times service pressure.

(o) *Rejected containers.* Reheat-treatment of rejected cylinders is authorized. Subsequent thereto, containers must pass all prescribed tests to be acceptable. Repair of welded seams by welding prior to reheat-treatment is authorized.

(p) *Marking.* Markings on each container must be stamped plainly and permanently on a permanent attachment or on a metal nameplate permanently secured to the container by means other than soft solder.

§178.59 Specification 8 steel cylinders with porous fillings for acetylene.

(a) *Type and service pressure.* A DOT 8 cylinder is a seamless cylinder with a service pressure of 250 pounds per square inch. The following steel is authorized:

(1) A longitudinal seam if forge lap welded;

(2) Attachment of heads by welding or by brazing by dipping process; or

(3) A welded circumferential body seam if the cylinder has no longitudinal seam.

(b) *Steel.* Open-hearth, electric or basic oxygen process steel of uniform quality must be used. Content percent may not exceed the following: Carbon, 0.25; phosphorus, 0.045; sulphur, 0.050.

(c) *Identification of steel.* Materials must be identified by any suitable method except that plates and billets for hot-drawn cylinders must be marked with the heat number.

(d) *Manufacture.* Cylinders must be manufactured using equipment and processes adequate to ensure that each cylinder produced conforms to the requirements of this subpart. No defect is acceptable that is likely to weaken the finished cylinder appreciably. A reasonably smooth and uniform surface finish is required. Welding procedures and operators must be qualified in accordance with CGA Pamphlet C–3.

(e) *Exposed bottom welds.* Exposed bottom welds on cylinders over 18 inches long must be protected by footrings.

(f) *Heat treatment.* Body and heads formed by drawing or pressing must be uniformly and properly heat treated prior to tests.

(g) *Openings.* Openings in the cylinders must comply with the following:

(1) Standard taper pipe threads are required;

(2) Length may not be less than as specified for American Standard pipe threads; tapped to gauge; clean cut, even, and without checks.

(h) *Hydrostatic test.* Each cylinder must successfully withstand a hydrostatic test as follows:

(1) The test must be by water-jacket, or other suitable method, operated so as to obtain accurate data. The pressure gauge must permit reading to an accuracy of 1 percent. The expansion gauge must permit reading of total expansion to an accuracy of either 1 percent or 0.1 cubic centimeter.

(2) Pressure must be maintained for at least 30 seconds and sufficiently longer to ensure complete expansion. Any internal pressure applied after heat-treatment and previous to the official test may not exceed 90 percent of the test pressure.

(3) Permanent volumetric expansion may not exceed 10 percent of total volumetric expansion at test pressure.

(4) One cylinder out of each lot of 200 or less must be hydrostatically tested to at least 750 pounds per square inch. Cylinders not so tested must be examined under pressure of between 500 and 600 pounds per square inch and show no defect. If hydrostatically tested cylinder fails, each cylinder in the lot may be hydrostatically tested and those passing are acceptable.

(i) *Leakage test.* Cylinders with bottoms closed in by spinning must be subjected to a leakage test by setting the interior air or gas pressure to not less than the service pressure. Cylinders which leak must be rejected.

(j) *Physical test.* A physical test must be conducted as follows:

(1) The test is required on 2 specimens cut longitudinally from 1 cylinder or part thereof taken at random out of each lot of 200 or less, after heat treatment.

(2) Specimens must conform to a gauge length of 8 inches with a width not over 1½ inches, a gauge length of 2 inches with width not over 1½, or a gauge length at least 24 times thickness with a width not over 6 times thickness is authorized when a cylinder wall is not over 3⁄16 inch thick.

(3) The yield strength in tension must be the stress corresponding to a permanent strain of 0.2 percent of the gauge length. The following conditions apply:

(i) The yield strength must be determined by either the ''offset'' method or the ''extension under load'' method as prescribed in ASTM Standard E8.

(ii) In using the ''extension under load'' method, the total strain (or ''extension under load'') corresponding to the stress at which the 0.2 percent permanent strain occurs may be determined with sufficient accuracy by calculating the elastic extension of the gauge length under appropriate load and adding thereto 0.2 percent of the gauge length. Elastic extension calculations must be based on an elastic modulus of 30,000,000. In the event of controversy, the entire stress-strain diagram must be plotted and the yield strength determined from the 0.2 offset.

(iii) For the purpose of strain measurement, the initial strain must be set while the specimen is under a stress of 12,000 pounds per square inch and the strain indicator reading being set at the calculated corresponding strain.

(iv) Cross-head speed of the testing machine may not exceed ⅛ inch per-minute during yield strength determination.

(4) Yield strength may not exceed 73 percent of tensile strength. Elongation must be at least 40 percent in 2 inch or 20 percent in other cases.

(k) *Rejected cylinders.* Reheat treatment of rejected cylinder is authorized. Subsequent thereto, cylinders must pass all prescribed tests to be acceptable. Repair by welding is authorized.

(l) *Porous filling.* (1) Cylinders must be filled with a porous material in accordance with the following:

(i) The porous material may not disintegrate or sag when wet with solvent or when subjected to normal service;

(ii) The porous filling material must be uniform in quality and free of voids, except that a well drilled into the filling material beneath the valve is authorized if the well is filled with a material of such type that the functions of the filling material are not impaired;

(iii) Overall shrinkage of the filling material is authorized if the total clearance between the cylinder shell and filling material, after solvent has been added, does not exceed ½ of 1 percent of the respective diameter or length, but not to exceed ⅛ inch, measured diametrically and longitudinally;

(iv) The clearance may not impair the functions of the filling material;

(v) The installed filling material must meet the requirements of CGA Pamphlet C–12; and

(vi) Porosity of filling material may not exceed 80 percent except that filling material with a porosity of up to 92 percent may be used when tested with satisfactory results in accordance with CGA Pamphlet C–12.

(2) When the porosity of each cylinder is not known, a cylinder taken at random from a lot of 200 or less must be tested for porosity. If the test cylinder fails, each cylinder in the lot may be tested individually and those cylinders that pass the test are acceptable.

(3) For filling that is molded and dried before insertion in cylinders, porosity test may be made on a sample block taken at random from material to be used.

(4) The porosity of the filling material must be determined. The amount of solvent at 70° F for a cylinder:

(i) Having shell volumetric capacity above 20 pounds water capacity (nominal) may not exceed the following:

Percent porosity of filler	Maximum acetone solvent percent shell capacity by volume
90 to 92	43.4
87 to 90	42.0

Percent porosity of filler	Maximum acetone solvent percent shell capacity by volume
83 to 87	40.0
80 to 83	38.6
75 to 80	36.2
70 to 75	33.8
65 to 70	31.4

(ii) Having volumetric capacity of 20 pounds or less water capacity (nominal), may not exceed the following:

Percent porosity of filler	Maximum acetone solvent percent shell capacity by volume
90 to 92	41.8
83 to 90	38.5
80 to 83	37.1
75 to 80	34.8
70 to 75	32.5
65 to 70	30.2

(m) *Tare weight.* The tare weight is the combined weight of the cylinder proper, porous filling, valve, and solvent, without removable cap.

(n) *Duties of inspector.* In addition to the requirements of §178.35, the inspector is required to—

(1) Certify chemical analyses of steel used, signed by manufacturer thereof; also verify by, check analyses of samples taken from each heat or from 1 out of each lot of 200 or less, plates, shells, or tubes used.

(2) Verify compliance of cylinder shells with all shell requirements; inspect inside before closing in both ends; verify heat treatment as proper; obtain all samples for all tests and for check analyses; witness all tests; verify threads by gauge; report volumetric capacity and minimum thickness of wall noted.

(3) Prepare report on manufacture of steel shells in form prescribed in §178.35. Furnish one copy to manufacturer and three copies to the company that is to complete the cylinders.

(4) Determine porosity of filling and tare weights; verify compliance of marking with prescribed requirements; obtain necessary copies of steel shell reports; and furnish complete reports required by this specification to the person who has completed the manufacture of the cylinders and, upon request, to the purchaser. The test reports must be retained by the inspector for fifteen years from the original test date of the cylinder.

(o) *Marking.* (1) Marking on each cylinder must be stamped plainly and permanently on or near the shoulder, top head, neck or valve protection collar which is permanently attached to the cylinder and forming integral part thereof.

(2) Tare weight of cylinder, in pounds and ounces, must be marked on the cylinder.

(3) Cylinders, not completed, when delivered must each be marked for identification of each lot of 200 or less.

§178.60 Specification 8AL steel cylinders with porous fillings for acetylene.

(a) *Type and service pressure.* A DOT 8AL cylinder is a seamless steel cylinder with a service pressure of 250 pounds per square inch. However, the attachment of heads by welding or by brazing by dipping process and a welded circumferential body seam is authorized. Longitudinal seams are not authorized.

(b) *Authorized steel.* The authorized steel is as specified in Table I of Appendix A to this part.

(c) *Identification of steel.* Material must be identified by any suitable method except that plates and billets for hot-drawn cylinders must be marked with heat number.

(d) *Manufacture.* Cylinders must be manufactured using equipment and processes adequate to ensure that each cylinder produced conforms to the requirements of this subpart. No defect is permitted that is likely to weaken the finished cylinder appreciably. A reasonably smooth and uniform surface finish is required. Welding procedures and operators must be qualified in accordance with CGA Pamphlet C–3.

(e) *Footrings.* Exposed bottom welds on cylinders over 18 inches long must be protected by footrings.

(f) *Welding or brazing.* Welding or brazing for any purpose whatsoever is prohibited except as follows:

(1) The attachment to the tops or bottoms of cylinders of neckrings, footrings, handlers, bosses, pads, and valve protecting rings is authorized

provided that such attachments and the portion of the container to which they are attached are made of weldable steel, the carbon content of which may not exceed 0.25 percent.

(2) Heat treatment is not required after welding or brazing weldable low carbon parts to attachments, specified in paragraph (f)(1) of this section, of similar material which have been previously welded or brazed to the top or bottom of cylinders and properly heat treated, provided such subsequent welding or brazing does not produce a temperature in excess of 400° F in any part of the top or bottom material.

(g) *Wall thickness; wall stress.* The wall thickness/wall stress of the cylinder must conform to the following:

(1) The calculated wall stress at 750 pounds per square inch may not exceed 35,000 pounds per square inch, or one-half of the minimum ultimate strength of the steel as determined in paragraph (l) of this section, whichever value is the smaller. The measured wall thickness may not include galvanizing or other protective coating.

(i) Calculation of wall stress must be made by the formula:

$$S=[P(1.3D^2+0.4d^2)]/(D^2-d^2)$$

Where:

S=wall stress in pounds per square inch;

P=750 pounds per square inch (minimum test pressure);

D=outside diameter in inches;

d=inside diameter in inches.

(ii) Either D or d must be calculated from the relation D = d + 2t, where t = minimum wall thickness.

(2) Cylinders with a wall thickness less than 0.100 inch, the ratio of straight side wall length to outside diameter may not exceed 3.5.

(3) For cylinders having outside diameter over 5 inches, the minimum wall thickness must be 0.087 inch.

(h) *Heat treatment.* Each cylinder must be uniformly and properly heat treated, prior to tests, by any suitable method in excess of 1100° F. Heat treatment must be accomplished after all forming and welding operations, except that when brazed joints are used, heat treatment must follow any forming and welding operations but may be done before, during, or after the brazing operations. Liquid quenching is not authorized.

(i) *Openings.* Standard taper pipe threads required in all openings. The length of the opening may not be less than as specified for American Standard pipe threads; tapped to gauge; clean cut, even, and without checks.

(j) *Hydrostatic test.* Each cylinder must successfully withstand a hydrostatic test as follows:

(1) The test must be by water-jacket, or other suitable method, operated so as to obtain accurate data. The pressure gauge must permit reading to an accuracy of 1 percent. The expansion gauge must permit reading of total expansion to an accuracy of either 1 percent or 0.1 cubic centimeter.

(2) Pressure must be maintained for at least 30 seconds and sufficiently longer to ensure complete expansion. Any internal pressure applied after heat-treatment and previous to the official test may not exceed 90 percent of the test pressure.

(3) Permanent volumetric expansion may not exceed 10 percent of total volumetric expansion at test pressure.

(4) One cylinder out of each lot of 200 or less must be hydrostatically tested to at least 750 pounds per square inch. Cylinders not so tested must be examined under pressure of between 500 and 600 pounds per square inch and show no defect. If a hydrostatically tested cylinder fails, each cylinder in the lot may be hydrostatically tested and those passing are acceptable.

(k) *Leakage test.* Cylinders with bottoms closed in by spinning must be leakage tested by setting the interior air or gas pressure at not less than the service pressure. Any cylinder that leaks must be rejected.

(l) *Physical test.* A physical test must be conducted as follows;

(1) The test is required on 2 specimens cut longitudinally from 1 cylinder or part thereof taken at random out of each lot of 200 or less, after heat treatment.

(2) Specimens must conform to a gauge length of 8 inches with a width not over 1½ inches, a gauge length 2 inches with a width not over 1 ½ inches, or a gauge length at least 24 times thickness with a width not over

6 times thickness is authorized when a cylinder wall is not over 3/16 inch thick.

(3) The yield strength in tension must be the stress corresponding to a permanent strain of 0.2 percent of the gauge length. The following conditions apply:

(i) The yield strength must be determined by either the ''offset'' method or the ''extension under load'' method as prescribed in ASTM Standard E 8.

(ii) In using the ''extension under load'' method, the total strain (or ''extension under load'') corresponding to the stress at which the 0.2 percent permanent strain occurs may be determined with sufficient accuracy by calculating the elastic extension of the gauge length under appropriate load and adding thereto 0.2 percent of the gauge length. Elastic extension calculations must be based on an elastic modulus of 30,000,000. In the event of controversy, the entire stress-strain diagram must be plotted and the yield strength determined from the 0.2 offset.

(iii) For the purpose of strain measurement, the initial strain must be set while the specimen is under a stress of 12,000 pounds per square inch, the strain indicator reading being set at the calculated corresponding strain.

(iv) Cross-head speed of the testing machine may not exceed ⅛ inch per minute during yield strength determination.

(m) *Elongation.* Physical test specimens must show at least a 40 percent elongation for a 2 inch gauge length or at least a 20 percent elongation in other cases. Except that these elongation percentages may be reduced numerically by 2 for 2 inch specimens and 1 in other cases for each 7,500 pounds per square inch increment of tensile strength above 50,000 pounds per square inch to a maximum of four such increments.

(n) *Weld tests.* Specimens taken across the circumferentially welded seam must be cut from one cylinder taken at random from each lot of 200 or less cylinders after heat treatment and must pass satisfactorily the following tests:

(1) *Tensile test.* A specimen must be cut from one cylinder of each lot of 200 or less, or welded test plate. The specimen must be taken from across the major seam and must be prepared and tested in accordance with and must meet the requirements of CGA Pamphlet C–3. Should this specimen fail to meet the requirements, specimens may be taken from two additional cylinders or welded test plates from the same lot and tested. If either of the latter specimens fail to meet the requirements, the entire lot represented must be rejected.

(2) *Guided bend test.* A root bend test specimen must be cut from the cylinder or welded test plate, used for the tensile test specified in paragraph (n)(1) of this section. Specimens must be prepared and tested in accordance with and must meet the requirements of CGA Pamphlet C–3.

(3) *Alternate guided-bend test.* This test may be used and must be as required by CGA Pamphlet C–3. The specimen must be bent until the elongation at the outer surface, adjacent to the root of the weld, between the lightly scribed gage lines-a to b, must be at least 20 percent, except that this percentage may be reduced for steels having a tensile strength in excess of 50,000 pounds per square inch, as provided in paragraph (m) of this section.

(o) *Rejected cylinders.* Reheat treatment of rejected cylinders is authorized. Subsequent thereto, cylinders must pass all prescribed tests to be acceptable. Repair by welding is authorized.

(p) *Porous filling.* (1) Cylinders must be filled with a porous material in accordance with the following:

(i) The porous material may not disintegrate or sag when wet with solvent or when subjected to normal service;

(ii) The filling material must be uniform in quality and free of voids, except that a well drilled into the filling material beneath the valve is authorized if the well is filled with a material of such type that the functions of the filling material are not impaired;

(iii) Overall shrinkage of the filling material is authorized if the total clearance between the cylinder shell and filling material, after solvent has been added, does not exceed ½ of 1 percent of the respective diameter or length but not to exceed ⅛ inch, measured diametrically and longitudinally;

(iv) The clearance may not impair the functions of the filling material;

(v) The installed filling material must meet the requirements of CGA Pamphlet C–12; and

(vi) Porosity of filling material may not exceed 80 percent except that filling material with a porosity of up to 92 percent may be used when tested with satisfactory results in accordance with CGA Pamphlet C–12.

(2) When the porosity of each cylinder is not known, a cylinder taken at random from a lot of 200 or less must be tested for porosity. If the test cylinder fails, each cylinder in the lot may be tested individually and those cylinders that pass the test are acceptable.

(3) For filling that is molded and dried before insertion in cylinders, porosity test may be made on sample block taken at random from material to be used.

(4) The porosity of the filling material must be determined; the amount of solvent at 70° F for a cylinder:

(i) Having shell volumetric capacity above 20 pounds water capacity (nominal) may not exceed the following:

Percent porosity of filler	Maximum acetone solvent percent shell capacity by volume
90 to 92	43.4
87 to 90	42.0
83 to 87	40.0
80 to 83	38.6
75 to 80	36.2
70 to 75	33.8
65 to 70	31.4

(ii) Having volumetric capacity of 20 pounds or less water capacity (nominal), may not exceed the following:

Percent porosity of filler	Maximum acetone solvent percent shell capacity by volume
90 to 92	41.8
83 to 90	38.5
80 to 83	37.1
75 to 80	34.8
70 to 75	32.5
65 to 70	30.2

(q) *Tare weight.* The tare weight is the combined weight of the cylinder proper, porous filling, valve, and solvent, but without removable cap.

(r) *Duties of inspector.* In addition to the requirements of § 178.35, the inspector shall—

(1) Certify chemical analyses of steel used, signed by manufacturer thereof; also verify by check analyses, of samples taken from each heat or from 1 out of each lot of 200 or less plates, shells, or tubes used.

(2) Verify compliance of cylinder shells with all shell requirements, inspect inside before closing in both ends, verify heat treatment as proper; obtain all samples for all tests and for check analyses, witness all tests; verify threads by gauge, report volumetric capacity and minimum thickness of wall noted.

(3) Report percentage of each specified alloying element in the steel. Prepare report on manufacture of steel shells in form prescribed in § 178.35. Furnish one copy to manufacturer and three copies to the company that is to complete the cylinders.

(4) Determine porosity of filling and tare weights; verify compliance of marking with prescribed requirements; obtain necessary copies of steel shell reports prescribed in paragraph (b) of this section; and furnish complete test reports required by this specification to the person who has completed the manufacturer of the cylinders and, upon request, to the purchaser. The test reports must be retained by the inspector for fifteen years from the original test date of the cylinder.

(s) *Marking.* (1) Tare weight of cylinder, in pounds and ounces, must be marked on the cylinder.

(2) Cylinders, not completed, when delivered must each be marked for identification of each lot of 200 or less.

(3) Markings must be stamped plainly and permanently in locations in accordance with the following:

(i) On shoulders and top heads not less than 0.087 inch thick; or

(ii) On neck, valve boss, valve protection sleeve, or similar part permanently attached to the top end of cylinder; or

(iii) On a plate of ferrous material attached to the top of the cylinder or permanent part thereof; the plate must be at least 1/16 inch thick, and must be attached by welding, or by brazing at a temperature of at least 1,100 °F throughout all edges of the plate. Sufficient space must be left on the plate to provide for stamping at least four (4) retest dates.

§178.61 Specification 4BW welded steel cylinders with electric-arc welded longitudinal seam.

(a) *Type, size and service pressure.* A DOT 4BW cylinder is a welded type steel cylinder with a longitudinal electric-arc welded seam, a water capacity (nominal) not over 1,000 pounds and a service pressure at least 225 and not over 500 pounds per square inch gauge. Cylinders closed in by spinning process are not authorized.

(b) *Authorized steel.* Steel used in the construction of the cylinder must conform to the following:

(1) The body of the cylinder must be constructed of steel conforming to the limits specified in Table I of Appendix A to this part.

(2) Material for heads must meet the requirements of paragraph (a) of this section or be open hearth, electric or basic oxygen carbon steel of uniform quality. Content percent may not exceed the following: Carbon 0.25, Manganese 0.60, Phosphorus 0.045, Sulfur 0.050. Heads must be hemispherical or ellipsoidal in shape with a maximum ratio of 2.1. If low carbon steel is used, the thickness of such heads must be determined by using a maximum wall stress of 24,000 p.s.i. in the formula described in paragraph (f)(1) of this section.

(c) *Identification of material.* Material must be identified by any suitable method.

(d) *Manufacture.* Cylinders must be manufactured using equipment and processes adequate to ensure that each cylinder produced conforms to the requirements of this subpart and the following:

(1) No defect is permitted that is likely to weaken the finished cylinder appreciably. A reasonably smooth and uniform surface is required. Exposed bottom welds on cylinders over 18 inches long must be protected by footrings. Minimum thickness of heads may not be less than 90 percent of the required thickness of the sidewall. Heads must be concave to pressure.

(2) Circumferential seams must be by electric-arc welding. Joints must be butt with one member offset (joggle butt) or lap with minimum overlap of at least four times nominal sheet thickness.

(3) Longitudinal seams in shells must conform to the following:

(i) Longitudinal electric-arc welded seams must be of the butt welded type. Welds must be made by a machine process including automatic feed and welding guidance mechanisms. Longitudinal seams must have complete joint penetration, and must be free from undercuts, overlaps or abrupt ridges or valleys. Misalignment of mating butt edges may not exceed 1/6 of nominal sheet thickness or 1/32 inch whichever is less. All joints with nominal sheet thickness up to and including 1/8 inch must be tightly butted. When nominal sheet thickness is greater than 1/8 inch, the joint must be gapped with maximum distance equal to one-half the nominal sheet thickness or 1/32 inch whichever is less. Joint design, preparation and fit-up must be such that requirements of this paragraph (d) are satisfied.

(ii) Maximum joint efficiency must be 1.0 when each seam is radiographed completely. Maximum joint efficiency must be 0.90 when one cylinder from each lot of 50 consecutively welded cylinders is spot radiographed. In addition, one out of the first five cylinders welded following a shut down of welding operations exceeding four hours must be spot radiographed. Spot radiographs, when required, must be made of a finished welded cylinder and must include the girth weld for 2 inches in both directions from the intersection of the longitudinal and

girth welds and include at least 6 inches of the longitudinal weld. Maximum joint efficacy of 0.75 must be permissible without radiography.

(4) Welding procedures and operators must be qualified in accordance with CGA Pamphlet C–3.

(e) *Welding of attachments.* The attachment to the tops and bottoms only of cylinders by welding of neckrings, footrings, handles, bosses, pads and valve protection rings is authorized provided that such attachments and the portion of the container to which they are attached are made of weldable steel, the carbon content of which may not exceed 0.25 percent.

(f) *Wall thickness.* For outside diameters over 6 inches the minimum wall thickness must be 0.078 inch. For a cylinder with a wall thickness less than 0.100 inch, the ratio of tangential length to outside diameter may not exceed 4 to1 (4:1). In any case the minimum wall thickness must be such that the wall stress calculated by the formula listed in paragraph (f)(4) of this section may not exceed the lesser value of any of the following:

(1) The value referenced in paragraph (b) of this section for the particular material under consideration.

(2) One-half of the minimum tensile strength of the material determined as required in paragraph (m) of this section.

(3) 35,000 pounds per square inch.

(4) Stress must be calculated by the following formula:

$$S=[2P(1.3D^2+0.4d^2)]/[E(D^2-d^2)]$$

where:

S=wall stress, p.s.i.;
P=service pressure, p.s.i.;
D=outside diameter, inches;
d=inside diameter, inches;
E=joint efficiency of the longitudinal seam (from paragraph (d) of this section).

(g) *Heat treatment.* Each cylinder must be uniformly and properly heat treated prior to test by the applicable method referenced in paragraph (b) of this section. Heat treatment must be accomplished after all forming and welding operations. Heat treatment is not required after welding or brazing of weldable low carbon parts to attachments of similar material which have been previously welded to the top or bottom of cylinders and properly heat treated, provided such subsequent welding or brazing does not produce a temperature in excess of 400° F in any part of the top or bottom material.

(h) *Openings in cylinders.* Openings in the cylinder must conform to the following:

(1) All openings must be in the heads or bases.

(2) Openings in cylinders must be provided with adequate fittings, bosses, or pads, integral with or securely attached to the cylinder by welding.

(3) Threads must comply with the following:

(i) Threads must be clean cut and to gauge.

(ii) Taper threads must be of length not less than as specified for American Standard Taper Pipe threads.

(iii) Straight threads, having at least 4 engaged threads, to have tight fit and calculated shear strength at least 10 times the test pressure of the cylinder; gaskets required, adequate to prevent leakage.

(4) Closure of fittings, boss or pads must be adequate to prevent leakage.

(i) *Hydrostatic test.* Cylinders must withstand a hydrostatic test, as follows:

(1) The test must be by water-jacket, or other suitable method, operated so as to obtain accurate data. The pressure gauge must permit readings to an accuracy of 1 percent. The expansion gauge must permit readings of total volumetric expansion to an accuracy either of 1 percent or 0.1 cubic centimeter.

(2) Pressure must be maintained for at least 30 seconds and sufficiently longer to ensure complete expansion. Any internal pressure applied after heat treatment and previous to the official test may not exceed 90 percent of the test pressure.

(3) Permanent volumetric expansion may not exceed 10 percent of the total volumetric expansion at test pressure.

(4) Cylinders must be tested as follows:

(i) At least 1 cylinder selected at random out of each lot of 200 or less must be tested as outlined in paragraphs (i)(1), (i)(2), and (i)(3) of this section to at least two times service pressure.

(ii) All cylinders not tested as outlined in paragraph (i)(4)(i) of this section must be examined under pressure of at least two times service pressure and show no defect.

(5) One finished cylinder selected at random out of each lot of 500 or less successively produced must be hydrostatically tested to 4 times service pressure without bursting.

(j) *Physical tests.* Cylinders must be subjected to a physical test as follows:

(1) Specimens must be taken from one cylinder after heat treatment and chosen at random from each lot of 200 or less, as follows:

(i) Body specimen. One specimen must be taken longitudinally from the body section at least 90 degrees away from the weld.

(ii) Head specimen. One specimen must be taken from either head on a cylinder when both heads are made of the same material. However, if the two heads are made of differing materials, a specimen must be taken from each head.

(iii) If due to welded attachments on the top head there is insufficient surface from which to take a specimen, it may be taken from a representative head of the same heat treatment as the test cylinder.

(2) Specimens must conform to the following:

(i) A gauge length of 8 inches with a width not over 1½ inches, a gauge length of 2 inches with a width not over 1½ inches, or a gauge length at least 24 times thickness with a width not over 6 times thickness is authorized when a cylinder wall is not over 3⁄16 inch thick.

(ii) The specimen, exclusive of grip ends, may not be flattened. Grip ends may be flattened to within 1 inch of each end of the reduced section.

(iii) When size of the cylinder does not permit securing straight specimens, the specimens may be taken in any location or direction and may be straightened or flattened cold, by pressure only, not by blows when specimens are so taken and prepared, the inspector's report must show in connection with record of physical tests detailed information in regard to such specimens.

(iv) Heating of a specimen for any purpose is not authorized.

(3) The yield strength in tension must be the stress corresponding to a permanent strain of 0.2 percent of the gauge length. The following conditions apply:

(i) The yield strength must be determined by either the ''off-set'' method or the ''extension under load'' method as prescribed in ASTM Standard E8.

(ii) In using the ''extension under load'' method, the total strain (or ''extension under load''), corresponding to the stress at which the 0.2-percent permanent strain occurs may be determined with sufficient accuracy by calculating the elastic extension of the gauge length under appropriate load and adding thereto 0.2 percent of the gauge length. Elastic extension calculations must be based on an elastic modulus of 30,000,000. In the event of controversy, the entire stress-strain diagram must be plotted and the yield strength determined from the 0.2-percent offset.

(iii) For the purpose of strain measurement, the initial strain reference must be set while the specimen is under a stress of 12,000 pounds per square inch and the strain indicator reading being set at the calculated corresponding strain.

(iv) Cross-head speed of the testing machine may not exceed ⅛ inch per minute during yield strength determination.

(k) *Elongation.* Physical test specimens must show at least a 40 percent elongation for a 2-inch gauge length or at least a 20 percent elongation in other cases. Except that these elongation percentages may be reduced numerically by 2 for 2-inch specimens and by 1 in other cases for each 7,500 pounds per square inch increment of tensile strength above 50,000 pounds per square inch to a maximum of four increments.

(l) *Tests of welds.* Welds must be subjected to the following tests:

(1) *Tensile test.* A specimen must be cut from one cylinder of each lot of 200 or less. The specimen must be taken from across the longitudinal seam and must be prepared and tested in accordance with and must meet the requirements of CGA Pamphlet C–3.

(2) *Guided bend test.* A root test specimen must be cut from the cylinder used for the tensile test specified in paragraph (l)(1) of this section. Specimens must be taken from across the longitudinal seam and must be prepared and tested in accordance with and must meet the requirements of CGA Pamphlet C–3.

(3) *Alternate guided bend test.* This test may be used and must be as required by CGA Pamphlet C–3. The specimen must be bent until the elongation at the outer surface, adjacent to the root of the weld, between the lightly scribed gauge lines a to b, must be at least 20 percent, except that this percentage may be reduced for steels having a tensile strength in excess of 50,000 pounds per square inch, as provided in paragraph (k) of this section.

(m) *Radiographic examination.* Welds of the cylinders must be subjected to a radiographic examination as follows:

(1) Radiographic inspection must conform to the techniques and acceptability criteria set forth in CGA Pamphlet C–3. When fluoroscopic inspection is used, permanent film records need not be retained.

(2) Should spot radiographic examination fail to meet the requirements of paragraph (m)(1) of this section, two additional welds from the same lot of 50 cylinders or less must be examined, and if either of these fail to meet the requirements, each cylinder must be examined as previously outlined; only those passing are acceptable.

(n) *Rejected cylinders.* (1) Unless otherwise stated, if a sample cylinder or specimen taken from a lot of cylinders fails the prescribed test, then two additional specimens must be selected from the same lot and subjected to the prescribed test. If either of these fails the test, then the entire lot must be rejected.

(2) Reheat treatment of rejected cylinders is authorized. Subsequent thereto, cylinders must pass all prescribed tests to be acceptable. Repair of welded seams by welding is authorized provided that all defective metal is cut away and the joint is rewelded as prescribed for original welded joints.

(o) *Markings.* Markings must be stamped plainly and permanently in any of the following locations on the cylinder:

(1) On shoulders and top heads when they are not less than 0.087-inch thick.

(2) On a metal plate attached to the top of the cylinder or permanent part thereof; sufficient space must be left on the plate to provide for stamping at least six retest dates; the plate must be at least 1/16-inch thick and must be attached by welding, or by brazing. The brazing rod is to melt at a temperature of 1100°F Welding or brazing must be along all the edges of the plate.

(3) On the neck, valve boss, valve protection sleeve, or similar part permanently attached to the top of the cylinder.

(4) On the footring permanently attached to the cylinder, provided the water capacity of the cylinder does not exceed 25 pounds.

(p) *Inspector's report.* In addition to the information required by § 178.35, the inspector's report must indicate the type and amount of radiography.

§ 178.65 Specification 39 non-reusable (non-refillable) cylinders.

(a) *Type, size, service pressure, and test pressure.* A DOT 39 cylinder is a seamless, welded, or brazed cylinder with a service pressure not to exceed 80 percent of the test pressure. Spherical pressure vessels are authorized and covered by references to cylinders in this specification.

(1) *Size limitation.* Maximum water capacity may not exceed: (i) 55 pounds (1,526 cubic inches) for a service pressure of 500 p.s.i.g. or less, and (ii) 10 pounds (277 cubic inches) for a service pressure in excess of 500 p.s.i.g.

(2) *Test pressure.* The minimum test pressure is the maximum pressure of contents at 130° F or 180 p.s.i.g. whichever is greater.

(3) *Pressure of contents.* The term ''pressure of contents'' as used in this specification means the total pressure of all the materials to be shipped in the cylinder.

(b) *Material; steel or aluminum.* The cylinder must be constructed of either steel or aluminum conforming to the following requirements:

(1) *Steel.* (i) The steel analysis must conform to the following:

	Ladle analysis	Check analysis
Carbon, maximum percent	0.12	0.15
Phosphorus, maximum percent	.04	.05
Sulfur, maximum percent	.05	.06

(ii) For a cylinder made of seamless steel tubing with integrally formed ends, hot drawn, and finished, content percent for the following may not exceed: Carbon, 0.55; phosphorous, 0.045; sulfur, 0.050.

(iii) For non-heat treated welded steel cylinders, adequately killed deep drawing quality steel is required.

(iv) Longitudinal or helical welded cylinders are not authorized for service pressures in excess of 500 p.s.i.g.

(2) *Aluminum.* Aluminum is not authorized for service pressures in excess of 500 p.s.i.g. The analysis of the aluminum must conform to the Aluminum Association standard for alloys 1060, 1100, 1170, 3003, 5052, 5086, 5154, 6061, and 6063 as specified in its publication entitled ''Aluminum Standards and Data''.

(3) Material with seams, cracks, laminations, or other injurious defects not permitted.

(4) Material used must be identified by any suitable method.

(c) *Manufacture.* (1) General manufacturing requirements are as follows:

(i) The surface finish must be uniform and reasonably smooth.

(ii) Inside surfaces must be clean, dry, and free of loose particles.

(iii) No defect of any kind is permitted if it is likely to weaken a finished cylinder.

(2) Requirements for seams:

(i) Brazing is not authorized on aluminum cylinders.

(ii) Brazing material must have a melting point of not lower than 1,000 °F.

(iii) Brazed seams must be assembled with proper fit to ensure complete penetration of the brazing material throughout the brazed joint.

(iv) Minimum width of brazed joints must be at least four times the thickness of the shell wall.

(v) Brazed seams must have design strength equal to or greater than 1.5 times the minimum strength of the shell wall.

(vi) Welded seams must be properly aligned and welded by a method that provides clean, uniform joints with adequate penetration.

(vii) Welded joints must have a strength equal to or greater than the minimum strength of the shell material in the finished cylinder.

(3) Attachments to the cylinder are permitted by any means which will not be detrimental to the integrity of the cylinder. Welding or brazing of attachments to the cylinder must be completed prior to all pressure tests.

(4) Welding procedures and operators must be qualified in accordance with CGA Pamphlet C–3.

(d) *Wall thickness.* The minimum wall thickness must be such that the wall stress at test pressure does not exceed the yield strength of the material of the finished cylinder wall. Calculations must be made by the following formulas:

(1) Calculation of the stress for cylinders must be made by the following formula:

$$S=[P(1.3D^2+0.4d^2)]/(D^2-d^2)$$

Where:

S=Wall stress, in p.s.i.;
P=Test pressure;
D=Outside diameter, in inches;
d=Inside diameter, in inches.

(2) Calculation of the stress for spheres must be made by the following formula:

$$S=PD/4t$$

Where:

S=Wall stress, in p.s.i.;
P=Test pressure;
D=Outside diameter, in inches;
t=Minimum wall thickness, in inches.

(e) *Openings and attachments.* Openings and attachments must conform to the following:

(1) Openings and attachments are permitted on heads only.

(2) All openings and their reinforcements must be within an imaginary circle, concentric to the axis of the cylinder. The diameter of the circle may not exceed 80 percent of the outside diameter of the cylinder. The plane of the circle must be parallel to the plane of a circumferential weld and normal to the long axis of the cylinder.

(3) Unless a head has adequate thickness, each opening must be reinforced by a securely attached fitting, boss, pad, collar, or other suitable means.

(4) Material used for welded openings and attachments must be of weldable quality and compatible with the material of the cylinder.

(f) *Pressure tests.* (1) Each cylinder must be tested at an internal pressure of at least the test pressure and must be held at that pressure for at least 30 seconds.

(i) The leakage test must be conducted by submersion under water or by some other method that will be equally sensitive.

(ii) If the cylinder leaks, evidences visible distortion, or any other defect, while under test, it must be rejected (see paragraph (h) of this section).

(2) One cylinder taken from the beginning of each lot, and one from each 1,000 or less successively produced within the lot thereafter, must be hydrostatically tested to destruction. The entire lot must be rejected (see paragraph (h) of this section) if:

(i) A failure occurs at a gage pressure less than 2.0 times the test pressure;

(ii) A failure initiates in a braze or a weld or the heat affected zone thereof;

(iii) A failure is other than in the sidewall of a cylinder longitudinal with its long axis; or

(iv) In a sphere, a failure occurs in any opening, reinforcement, or at a point of attachment.

(3) A ''lot'' is defined as the quantity of cylinders successively produced per production shift (not exceeding 10 hours) having identical size, design, construction, material, heat treatment, finish, and quality.

(g) *Flattening test.* One cylinder must be taken from the beginning of production of each lot (as defined in paragraph (f)(3) of this section) and subjected to a flattening test as follows:

(1) The flattening test must be made on a cylinder that has been tested at test pressure.

(2) A ring taken from a cylinder may be flattened as an alternative to a test on a complete cylinder. The test ring may not include the heat affected zone or any weld. However, for a sphere, the test ring may include the circumferential weld if it is located at a 45 degree angle to the ring, +/−5 degrees.

(3) The flattening must be between 60 degrees included-angle, wedge shaped knife edges, rounded to a 0.5 inch radius.

(4) Cylinders and test rings may not crack when flattened so that their outer surfaces are not more than six times wall thickness apart when made of steel or not more than ten times wall thickness apart when made of aluminum.

(5) If any cylinder or ring cracks when subjected to the specified flattening test, the lot of cylinders represented by the test must be rejected (see paragraph (h) of this section).

(h) *Rejected cylinders.* Rejected cylinders must conform to the following requirements:

(1) If the cause for rejection of a lot is determinable, and if by test or inspection defective cylinders are eliminated from the lot, the remaining cylinders must be qualified as a new lot under paragraphs (f) and (g) of this section.

(2) Repairs to welds are permitted. Following repair, a cylinder must pass the pressure test specified in paragraph (f) of this section.

(3) If a cylinder made from seamless steel tubing fails the flattening test described in paragraph (g) of this section, suitable uniform heat treatment must be used on each cylinder in the lot. All prescribed tests must be performed subsequent to this heat treatment.

(i) *Markings.* (1) The markings required by this section must be durable and waterproof. The requirements of § 173.24(c)(1) (ii) and (iv) of this subchapter and § 178.35(h) do not apply to this section.

(2) Required markings are as follows:

(i) DOT–39.

(ii) NRC.

(iii) The service pressure.

(iv) The test pressure.

(v) The registration number (M****) of the manufacturer.

(vi) The lot number.

(vii) The date of manufacture if the lot number does not establish the date of manufacture.

(viii) With one of the following statements:

(A) For cylinders manufactured prior to October 1, 1996: ''Federal law forbids transportation if refilled-penalty up to $25,000 fine and 5 years imprisonment

(49 U.S.C. 1809)'' or ''Federal law forbids transportation if refilled-penalty up to $500,000 fine and 5 years imprisonment (49 U.S.C. 5124).''

(B) For cylinders manufactured on or after October 1, 1996: ''Federal law forbids transportation if refilled-penalty up to $500,000 fine and 5 years imprisonment (49 U.S.C. 5124).''

(3) The markings required by paragraphs (i)(2)(i) through (i)(2)(v) of this section must be in numbers and letters at least ⅛ inch high and displayed sequentially. For example:

DOT–39 NRC 250/500 M1001.

(4) No person may mark any cylinder with the specification identification ''DOT–39'' unless it was manufactured in compliance with the requirements of this section and its manufacturer has a registration number (M****) from the Associate Administrator.

§178.68 Specification 4E welded aluminum cylinders.

(a) *Type, size and service pressure.* A DOT 4E cylinder is a welded aluminum cylinder with a water capacity (nominal) of not over 1,000 pounds and a service pressure of at least 225 to not over 500 pounds per square inch. The cylinder must be constructed of not more than two seamless drawn shells with no more than one circumferential weld. The circumferential weld may not be closer to the point of tangency of the cylindrical portion with the shoulder than 20 times the cylinder wall thickness. Cylinders or shells closed in by spinning process and cylinders with longitudinal seams are not authorized.

(b) *Authorized material.* The cylinder must be constructed of aluminum of uniform quality. The following chemical analyses are authorized:

TABLE 1.—AUTHORIZED MATERIALS

Designation	Chemical analysis—limits in percent 5154 [1]
Iron plus silicon	0.45 maximum.
Copper	0.10 maximum.
Manganese	0.10 maximum.
Magnesium	3.10/3.90.
Chromium	0.15/0.35.
Zinc	0.20 maximum.
Titanium	0.20 maximum.
Others, each	0.05 maximum.
Others, total	0.15 maximum.
Aluminum	remainder.

[1] Analysis must regularly be made only for the elements specifically mentioned in this table. If, however, the presence of other elements is indicated in the course of routine analysis, further analysis should be made to determine conformance with the limits specified for other elements.

(c) *Identification.* Material must be identified by any suitable method that will identify the alloy and manufacturer's lot number.

(d) *Manufacture.* Cylinders must be manufactured using equipment and processes adequate to ensure that each cylinder produced conforms to the requirements of this subpart. No defect is permitted that is likely to weaken the finished cylinder appreciably. A reasonably smooth and uniform surface finish is required. All welding must be by the gas shielded arc process.

(e) *Welding.* The attachment to the tops and bottoms only of cylinders by welding of neckrings or flanges, footrings, handles, bosses and pads and valve protection rings is authorized. However, such attachments and the portion of the cylinder to which it is attached must be made of weldable aluminum alloys.

(f) *Wall thickness.* The wall thickness of the cylinder must conform to the following:

(1) The minimum wall thickness of the cylinder must be 0.140 inch. In any case, the minimum wall thickness must be such that calculated wall stress at twice service pressure may not exceed the lesser value of either of the following:

(i) 20,000 pounds per square inch.

(ii) One-half of the minimum tensile strength of the material as required in paragraph (j) of this section.

(2) Calculation must be made by the following formula:

$$S=[P(1.3D^2+0.4d^2)]/(D^2-d^2)$$

Where:

S=wall stress in pounds per square inch;

P=minimum test pressure prescribed for water jacket test;

D=outside diameter in inches;

d=inside diameter in inches.

(3) Minimum thickness of heads and bottoms may not be less than the minimum required thickness of the side wall.

(g) *Opening in cylinder.* Openings in cylinders must conform to the following:

(1) All openings must be in the heads or bases.

(2) Each opening in cylinders, except those for safety devices, must be provided with a fitting, boss, or pad, securely attached to cylinder by welding by inert gas shielded arc process or by threads. If threads are used, they must comply with the following:

(i) Threads must be clean-cut, even, without checks and cut to gauge.

(ii) Taper threads to be of length not less than as specified for American Standard taper pipe threads.

(iii) Straight threads, having at least 4 engaged threads, to have tight fit and calculated shear strength at least 10 times the test pressure of the cylinder; gaskets required, adequate to prevent leakage.

(3) Closure of a fitting, boss, or pad must be adequate to prevent leakage.

(h) *Hydrostatic test.* Each cylinder must successfully withstand a hydrostatic test, as follows:

(1) The test must be by water jacket, or other suitable method, operated so as to obtain accurate data. The pressure gauge must permit reading to an accuracy of 1 percent. The expansion gauge must permit a reading of the total expansion to an accuracy either of 1 percent or 0.1 cubic centimeter.

(2) Pressure of 2 times service pressure must be maintained for at least 30 seconds and sufficiently longer to insure complete expansion. Any internal pressure applied previous to the official test may not exceed 90 percent of the test pressure. If, due to failure of the test apparatus, the test pressure cannot be maintained, the test may be repeated at a pressure increased by 10 percent over the pressure otherwise specified.

(3) Permanent volumetric expansion may not exceed 12 percent of total volumetric expansion at test pressure.

(4) Cylinders having a calculated wall stress of 18,000 pounds per square inch or less at test pressure may be tested as follows:

(i) At least one cylinder selected at random out of each lot of 200 or less must be tested in accordance with paragraphs (h)(1), (h)(2), and (h)(3) of this section.

(ii) All cylinders not tested as provided in paragraph (h)(4)(i) of this section must be examined under pressure of at least 2 times service pressure and show no defect.

(5) One finished cylinder selected at random out of each lot of 1,000 or less must be hydrostatically tested to 4 times the service pressure without bursting. Inability to meet this requirement must result in rejection of the lot.

(i) *Flattening test.* After hydrostatic testing, a flattening test is required on one section of a cylinder, taken at random out of each lot of 200 or less as follows:

(1) If the weld is not at midlength of the cylinder, the test section must be no less in width than 30 times the cylinder wall thickness. The weld must be in the center of the section. Weld reinforcement must be removed by machining or grinding so that the weld is flush with the exterior of the parent metal. There must be no evidence of cracking in the sample when it is flattened between flat plates to no more than 6 times the wall thickness.

(2) If the weld is at midlength of the cylinder, the test may be made as specified in paragraph (i)(1)(i) of this section or must be made between wedge shaped knife edges (60° angle) rounded to a ½ inch radius. There must be no evidence of cracking in the sample when it is flattened to no more than 6 times the wall thickness.

(j) *Physical test.* A physical test must be conducted to determine yield strength, tensile strength, elongation, and reduction of area of material as follows:

(1) The test is required on 2 specimens cut from one cylinder or part thereof taken at random out of each lot of 200 or less.

(2) Specimens must conform to the following:

(i) A gauge length of 8 inches with a width not over 1½ inches, a gauge length of 2 inches with a width not over 1½ inches.

(ii) The specimen, exclusive of grip ends, may not be flattened. Grip ends may be flattened to within 1 inch of each end of the reduced section.

(iii) When size of cylinder does not permit securing straight specimens, the specimens may be taken in any location or direction and may be straightened or flattened cold, by pressure only, not by blows; when specimens are so taken and prepared, the inspector's report must show in connection with record of physical test detailed information in regard to such specimens.

(iv) Heating of a specimen for any purpose is not authorized.

(3) The yield strength in tension must be the stress corresponding to a permanent strain of 0.2 percent of the gauge length. The following conditions apply:

(i) The yield strength must be determined by the ''offset'' method as prescribed in ASTM Standard E8.

(ii) Cross-head speed of the testing machine may not exceed ⅛ inch per minute during yield strength determination.

(k) *Acceptable results for physical tests.* An acceptable result of the physical test requires an elongation to at least 7 percent and yield strength not over 80 percent of tensile strength.

(l) *Weld tests.* Welds of the cylinder are required to successfully pass the following tests:

(1) *Reduced section tensile test.* A specimen must be cut from the cylinder used for the physical tests specified in paragraph (j) of this section. The specimen must be taken from across the seam, edges must be parallel for a distance of approximately 2 inches on either side of the weld. The specimen must be fractured in tension. The apparent breaking stress calculated on the minimum wall thickness must be at least equal to 2 times the stress calculated under paragraph (f)(2) of this section, and in addition must have an actual breaking stress of at least 30,000 pounds per square inch. Should this specimen fail to meet the requirements, specimens may be taken from 2 additional cylinders from the same lot and tested. If either of the latter specimens fails to meet requirements, the entire lot represented must be rejected.

(2) *Guided bend test.* A bend test specimen must be cut from the cylinder used for the physical tests specified in paragraph (j) of this section. Specimen must be taken across the seam, must be 1½ inches wide, edges must be parallel and rounded with a file, and backup strip, if used, must be removed by machining. The specimen must be bent to refusal in the guided bend test jig illustrated in paragraph 6.10 of CGA Pamphlet C–3. The root of the weld (inside surface of the cylinder) must be located away from the ram of the jig. No specimen must show a crack or other open defect exceeding ⅛ inch in any direction upon completion of the test. Should this specimen fail to meet the requirements, specimens may be taken from each of 2 additional cylinders from the same lot and tested. If either of the latter specimens fail to meet requirements, the entire lot represented must be rejected.

(m) *Rejected cylinders.* Repair of welded seams is authorized. Acceptable cylinders must pass all prescribed tests.

(n) *Inspector's report.* In addition to the information required by §178.35, the record of chemical analyses must also include applicable information on iron, titanium, zinc, and magnesium used in the construction of the cylinder.

[Amdt. 178–114, 61 FR 25942, May 23, 1996, as amended at 62 FR 51561, Oct. 1, 1997]

Subparts D–G—[Reserved]

Subpart H—Specifications for Portable Tanks

SOURCE: 29 FR 18972, Dec. 29, 1964, unless otherwise noted. Redesignated at 32 FR 5606, Apr. 5, 1967.

§178.245 Specification 51; steel portable tanks.

§178.245–1 Requirements for design and construction.

(a) Tanks must be seamless or welded steel construction or combination of both and have a water capacity in excess of 454 kg (1,000 pounds). Tanks must be designed, constructed, certified and stamped in accordance with the ASME Code.

(b) Tanks must be postweld heat treated and radiographed as prescribed

in the ASME Code except that each tank constructed in accordance with part UHT of the ASME Code must be postweld heat treated. Where postweld heat treatment is required, the tank must be treated as a unit after completion of all the welds in and/or to the shell and heads. The method must be as prescribed in the ASME Code. Welded attachments to pads may be made after postweld heat treatment is made. A tank used for anhydrous ammonia must be postweld heat treated. The postweld heat treatment must be as prescribed in the ASME Code, but in no event at less than 1050° F tank metal temperature. Additionally, tanks constructed in accordance with part UHT of the ASME Code must conform to the following requirements:

(1) Welding procedure and welder performance tests must be made annually in accordance with section IX of the ASME Code. In addition to the essential variables named therein, the following must be considered to be essential variables: number of passes, thickness of plate, heat input per pass, and manufacturer's identification of rod and flux. The number of passes, thickness of plate and heat input per pass may not vary more than 25 percent from the procedure qualification. Records of the qualification must be retained for at least 5 years by the tank manufacturer and made available to duly identified representatives of the Department of Transportation or the owner of the tank.

(2) Impact tests must be made on a lot basis. A lot is defined as 100 tons or less of the same heat and having a thickness variation no greater than plus or minus 25 percent. The minimum impact required for full-sized specimens shall be 20 foot-pounds (or 10 foot-pounds for half-sized specimens) at 0° F Charpy V-Notch in both the longitudinal and transverse direction. If the lot test does not pass this requirement, individual plates may be accepted if they individually meet this impact requirement.

(c) Except as provided in paragraph (d) of this section, all openings in the tank shall be grouped in one location, either at the top of the tank or at one end of the tank.

(d) The following openings may be installed at locations other than on the top or end of the tank:

(1) The openings for liquid level gauging devices, pressure gauges, or for safety devices, may be installed separately at the other location or in the side of the shell;

(2) One plugged opening of 2-inch National Pipe Thread or less provided for maintenance purposes may be located elsewhere;

(3) An opening of 3-inch National Pipe Size or less may be provided at another location, when necessary, to facilitate installation of condensing coils; or

(4) Filling and discharge connections may be installed below the normal liquid level of the tank if the tank design conforms to the following requirements:

(i) The tank must be permanently mounted in a full framework for containerized transport. For each tank design, a prototype tank, must fulfill the requirements of parts 450 through 453 of this title for compliance with the requirements of Annex II of the International Convention for Safe Containers.

(ii) Each filling and discharge connection must be equipped with an internal self-closing stop-valve capable of closing within 30 seconds of actuation. Each internal self-closing stop-valve must be protected by a shear section or sacrificial device located outboard of the valve. The shear section or sacrificial device must break at no more than 70 percent of the load that would cause failure of the internal self-closing stop-valve.

(iii) Each internal self-closing stop-valve must be provided with remote means of automatic closure, both thermal and mechanical. The thermal means of automatic closure must actuate at a temperature of not over 250° F.

(e) Each uninsulated tank used for the transportation of compressed gas, as defined in § 173.300 of this subchapter, must have an exterior surface finish that is significantly reflective, such as a light reflecting color if painted, or a bright reflective metal or other material if unpainted.

[Amdt. 178–117, 61 FR 50627, Sept. 26, 1996]

§178.245–2 Material.

(a) All material used for the construction of the tank and appurtenances shall be suitable for use with the commodity to be transported therein.

(b) A material of thickness less than 3/16 inch shall not be used for the shells and heads.

§178.245–3 Design pressure.

(a) The design pressure of a tank authorized under this specification shall be not less than the vapor pressure of the commodity contained therein at 115° F., or as prescribed for a particular commodity by part 173 of this chapter, except that in no case shall the design pressure of any container be less than 100 psig or more than 500 psig. When corrosion factor is prescribed by these regulations, the wall thickness of the tank calculated in accordance with the ''Code'' (see §178.245–1(a)) shall be increased by 20 percent or 0.10 inch, whichever is less.

NOTE 1: The term *design pressure* as used in this specification is identical to the term *maximum allowable working pressure* as used in the ''Code'' (see §178.245–1(a)).

(b) [Reserved]

§178.245–4 Tank mountings.

(a) Tanks shall be designed and fabricated with mountings to provide a secure base in transit. ''Skids'' or similar devices shall be deemed to comply with this requirement.

(b) All tank mountings such as skids, fastenings, brackets, cradles, lifting lugs, etc., intended to carry loadings shall be permanently secured to tanks in accordance with the requirements of the Code under which the tanks were fabricated and shall be designed to withstand static loadings in any direction equal to twice the weight of the tank and attachments when filled with the lading using a safety factor of not less than four, based on the ultimate strength of the material to be used. The specific gravity used in determining the static loadings shall be shown on the marking required by §178.245–6(a) and on the report required by §178.245–7(a).

(c) Lifting lugs or hold-down lugs may be added to either the tank or tank mountings. If lifting lugs and hold-down lugs are added directly to the tank, they shall be secured to doubling plates welded to the tank and located at points of support, except that lifting lugs or hold-down lugs with integral bases serving as doubling plates may be welded directly to the tank. Each lifting lug and hold-down lug shall be designed to withstand static loadings in any direction equal to twice the weight of the tank and attachments when filled with the lading using a safety factor of not less than four, based on the ultimate strength of the material to be used.

(d) All tank mountings shall be designed so as to prevent the concentration of excessive loads on the tank shell.

(e) A DOT 51 portable tank that meets the definition of ''container'' in §450.3(a)(3) of this title must meet the requirements of parts 450 through 453 of this title, in addition to the requirements of this subchapter.

[29 FR 18972, Dec. 29, 1964. Redesignated at 32 FR 5606, Apr. 5, 1967, as amended by Amdt. 178–117, 61 FR 50628, Sept. 26, 1996]

§178.245–5 Protection of valves and accessories.

(a) All valves, fittings, accessories, safety devices, gaging devices, and the like shall be adequately protected against mechanical damage.

(b) The protective device or housing shall conform to the requirements under which the tanks are fabricated with respect to design and construction, and shall be designed to withstand static loadings in any direction equal to twice the weight of the tank and attachments when filled with the lading using a safety factor of not less than four, based on the ultimate strength of the material to be used.

(c) Requirements concerning types of valves, retesting, and qualification of portable tanks contained in §§173.32 and 173.315 of this chapter must be observed.

[29 FR 18972, Dec. 29, 1964. Redesignated at 32 FR 5606, Apr. 5, 1967, as amended by Amdt. 178–104, 59 FR 49135, Sept. 26, 1994]

§178.245–6 Name plate.

(a) In addition to the markings required by the Code (see §178.245–1(a))

under which tanks were constructed, they shall have permanently affixed, in close proximity to the ASME ''U'' stamp certification, a metal plate. This plate shall be permanently affixed by means of soldering, brazing, or welding around its complete perimeter. Neither the plate itself nor the means of attachment to the tank shall be subject to destructive attack by the contents of tank. Upon such plate shall be plainly marked by stamping, embossing, or other means of forming letters into or onto the metal plate itself the following information in characters at least ⅛-inch high:

Manufacturer's name _____
Serial No. _____ Owner's serial No. _____
D.O.T. Specification No. _____
Water capacity (pounds) _____
Tare weight (pounds) _____
Design pressure (psig) _____
Design specific gravity _____
Original test date _____
Tank retested at _____ (psig) on: _____

(b) All tank outlets and inlets, except safety relief valves, shall be marked to designate whether they communicate with vapor or liquid when the tank is filled to the maximum permitted filling density.

[29 FR 18972, Dec. 29, 1964. Redesignated at 32 FR 5606, Apr. 5, 1967, and amended by Amdt. 178–67, 46 FR 49906, Oct. 8, 1981; Amdt. 178–117, 61 FR 50628, Sept. 26, 1996]

§ 178.245–7 Report.

(a) A copy of the manufacturer's data report required by the Code (See § 178.245–1(a)) under which the tank is fabricated shall be furnished to the owner for each new tank.

(b) [Reserved]

[Amdt. 178–76, 48 FR 28102, June 20, 1983]

§§ 178.251—178.253–5 [Reserved]

§ 178.255 Specification 60; steel portable tanks.

§ 178.255–1 General requirements.

(a) Tanks must be of fusion welded construction, cylindrical in shape with seamless heads concave to the pressure. Tank shells may be of seamless construction.

(b) Tanks must be designed and constructed in accordance with and fulfill all the requirements of the ASME Code.

(c) Tanks including all permanent attachments must be postweld heat treated as a unit.

(d) Requirements concerning types of valves, retesting, and qualification of portable tanks contained in §§ 173.32 and 173.315 of this chapter must be observed.

[29 FR 18972, Dec. 29, 1964. Redesignated at 32 FR 5606, Apr. 5, 1967, and amended by Amdt. 178–7, 34 FR 18250, Nov. 14, 1969]

§ 178.255–2 Material.

(a) Material used in the tank must be steel of good weldable quality and conform with the requirements of the ASME Code.

(b) The minimum thickness of metal, exclusive of lining material, for shell and heads of tanks shall be as follows:

Tank capacity	Minimum thickness (inch)
Not more than 1,200 gallons	¼
Over 1,200 to 1,800 gallons	5/16
Over 1,800 gallons	⅜

[29 FR 18972, Dec. 29, 1964. Redesignated at 32 FR 5606, Apr. 5, 1967, and amended by Amdt. 178–7, 34 FR 18250, Nov. 14, 1969]

§ 178.255–3 Expansion domes.

(a) Expansion domes, if applied, must have a minimum capacity of one percent of the combined capacity of the tank and dome.

(b) [Reserved]

§ 178.255–4 Closures for manholes and domes.

(a) The manhole cover shall be designed to provide a secure closure of the manhole. All covers, not hinged to the tanks, shall be attached to the outside of the dome by at least ⅛ inch chain or its equivalent. Closures shall be made tight against leakage of vapor and liquid by use of gaskets of suitable material.

(b) [Reserved]

§ 178.255–5 Bottom discharge outlets.

(a) Bottom discharge outlets prohibited, except on tanks used for shipments of sludge acid and alkaline corrosive liquids.

(b) If installed, bottom outlets or bottom washout chambers shall be of metal not subject to rapid deterioration by the lading, and each shall be provided with a valve or plug at its upper end and liquid-tight closure at it lower end. Each valve or plug shall be designed to insure against unseating due to stresses or shocks incident to transportation. Bottom outlets shall be adequately protected against handling damage and outlet equipment must not extend to within less than one inch of the bottom bearing surface of the skids or tank mounting.

[29 FR 18972, Dec. 29, 1964. Redesignated at 32 FR 5606, Apr. 5, 1967, as amended by Amdt. 178–104, 59 FR 49135, Sept. 26, 1994]

§178.255–6 Loading and unloading accessories.

(a) When installed, gauging, loading and air inlet devices, including their valves, shall be provided with adequate means for their secure closure; and means shall also be provided for the closing of pipe connections of valves.

(b) Interior heater coils, if installed, must be of extra heavy pipe and so constructed that breaking off of exterior connections will not cause leakage of tanks.

§178.255–7 Protection of valves and accessories.

(a) All valves, fittings, accessories, safety devices, gauging devices, and the like shall be adequately protected against mechanical damage by a housing closed with a cover plate.

(b) Protective housing shall comply with the requirements under which the tanks are fabricated with respect to design and construction, and shall be designed with a minimum factor of safety of four to withstand loadings in any direction equal to two times the weight of the tank and attachments when filled with water.

§178.255–8 Safety devices.

(a) See §173.315(i) of this subchapter.

(b) [Reserved]

[Amdt. 178–83, 50 FR 11066, Mar. 19, 1985]

§178.255–9 Compartments.

(a) When the interior of the tank is divided into compartments, each compartment shall be designed, constructed and tested as a separate tank. Thickness of shell and compartment heads shall be determined on the basis of total tank capacity.

(b) [Reserved]

§178.255–10 Lining.

(a) If a lining is required, the material used for lining the tank shall be homogeneous, nonporous, imperforate when applied, not less elastic than the metal of the tank proper. It shall be of substantially uniform thickness, not less than 1/32 inch thick if metallic, and not less than 1/16 inch thick if nonmetallic, and shall be directly bonded or attached by other equally satisfactory means. Rubber lining shall be not less than 3/16 inch thick. Joints and seams in the lining shall be made by fusing the material together or by other equally satisfactory means. The interior of the tank shall be free from scale, oxidation, moisture and all foreign matter during the lining operation.

(b) [Reserved]

§178.255–11 Tank mountings.

(a) Tanks shall be designed and fabricated with mountings to provide a secure base in transit. ''Skids'' or similar devices shall be deemed to comply with this requirement.

(b) All tank mountings such as skids, fastenings, brackets, cradles, lifting lugs, etc., intended to carry loadings shall be permanently secured to tanks in accordance with the requirements under which the tanks are fabricated, and shall be designed with a factor of safety of four, and built to withstand loadings in any direction equal to two times the weight of the tanks and attachments when filled to the maximum permissible loaded weight.

(c) Lifting lugs or side hold-down lugs shall be provided on the tank mountings in a manner suitable for attaching lifting gear and hold-down devices. Lifting lugs and hold-down lugs welded directly to the tank shall be of the pad-eye type. Doubling plates welded to the tank and located at the points of support shall be deemed to comply with this requirement.

(d) All tank mountings shall be so designed as to prevent the concentration of excessive loads on the tank shell.

§ 178.255–12 Pressure test.

(a) Each completed portable tank prior to application of lining shall be tested before being put into transportation service by completely filling the tank with water or other liquid having a similar viscosity, the temperature of which shall not exceed 100° F during the test, and applying a pressure of 60 psig. The tank shall be capable of holding the prescribed pressure for at least 10 minutes without leakage, evidence of impending failure, or failure. All closures shall be in place while the test is made and the pressure shall be gauged at the top of the tank. Safety devices and/or vents shall be plugged during this test.

(b) [Reserved]

[29 FR 18972, Dec. 29, 1964. Redesignated at 32 FR 5606, Apr. 5, 1967, as amended by Amdt. 178–104, 59 FR 49135, Sept. 26, 1994]

§ 178.255–13 Repair of tanks.

(a) Tanks failing to meet the test may be repaired and retested, provided that repairs are made in complete compliance with the requirements of this specification.

(b) [Reserved]

§ 178.255–14 Marking.

(a) In addition to marking required by the American Society of Mechanical Engineers Code, every tank shall bear permanent marks at least ⅛-inch high stamped into the metal near the center of one of the tank heads or stamped into a plate permanently attached to the tank by means of brazing or welding or other suitable means as follows:

Manufacturer's name —— Serial No. ——
DOT specification ——
Nominal capacity —— (gallons)
Tare weight —— (pounds)
Date of manufacture ——

(b) [Reserved]

[29 FR 18972, Dec. 29, 1964. Redesignated at 32 FR 5606, Apr. 5, 1967, and amended by Amdt. 178–67, 46 FR 49906, Oct. 8, 1981]

§ 178.255–15 Report.

(a) A copy of the manufacturer's data report required by the Code (See § 178.245–1(a)) under which the tank is fabricated must be furnished to the owner for each new tank.

Place ——
Date ——
Portable tank
Manufactured for —— Company
Location ——
Manufactured by —— Company
Location ——
Consigned to —— Company
Location ——
Size —— feet outside diameter by ——long.
Marks on tank as prescribed by § 178.255–14 of this specification are as follows:
Manufacturer's name ——
Serial number ——
Owner's serial number ——
DOT specification ——
ASME Code Symbol (par U–201) ——
Date of manufacture ——
Nominal capacity —— gallons.
It is hereby certified that this tank is in complete compliance with the requirements of *DOT specification No. 60.*
(Signed) ——
Manufacturer or owner

(b) [Reserved]

[29 FR 18972, Dec. 29, 1964. Redesignated at 32 FR 5606, Apr. 5, 1967, and amended by Amdt. 178–83, 50 FR 11066, Mar. 19, 1985]

§ 178.270 Specification IM 101 and IM 102 steel portable tanks; general design and construction requirements.

§ 178.270–1 Specification requirements for IM 101 and IM 102 steel portable tanks.

(a) Each IM portable tank must meet the requirements of this section in addition to the requirements of § 178.271 (IM 101) or § 178.272 (IM 102). These requirements apply to IM portable tanks of diameters no greater than 2438 mm (96 inches) that are designed to carry liquids having a vapor pressure of less than 2.97 bar-absolute (43 psia) at a temperature of 50° C (122° F).

(b) [Reserved]

[Amdt. 178–65, 46 FR 9895, Jan. 29, 1981]

§ 178.270–2 General.

(a) Each tank, including attachments and service and structural equipment, must be designed to withstand, without loss of contents, the maximum internal pressure that can be anticipated to result from the contents and the static

and dynamic stresses incurred in normal handling and transportation.

(b) For the purpose of this subchapter *maximum allowable working pressure* or MAWP is the maximum pressure that an IM portable tank may experience during any normal operation (including loading and unloading). The only exception to this limitation is hydrostatic testing.

(c) Each portable tank must have a cross-sectional design that is capable of being stress analyzed either mathematically or by the experimental method contained in UG–101 of the ASME Code, or other method acceptable to the Associate Administrator for Hazardous Materials Safety.

(d) Each portable tank must be designed so that the center of gravity of the filled tank is approximately centered within the points of attachment for lifting devices.

(e) When credit is taken for insulation to reduce the required emergency venting capacity of safety relief devices, the insulation must be jacketed or otherwise protected from the accumulation of moisture or foreign matter that would decrease its efficiency or corrode the tank.

(f) Each portable tank that has a lining must have a lining material that meets the following requirements:

(1) The material used to line the tank must be—

(i) Substantially immune to attack by the hazardous material transported;

(ii) Homogeneous;

(iii) Nonporous;

(iv) Imperforated when applied;

(v) At least as elastic as the material of the tank shell; and

(vi) Have thermal-expansion characteristics compatible with the tank shell.

(2) The lining of the tank, tank fitting and piping must be—

(i) Attached by bonding or other satisfactory means;

(ii) Continuous; and

(iii) Extended around the face of any flange.

(3) Joints and seams in the lining must be made by fusing the material together or by other equally effective means.

[Amdt. 178–65, 46 FR 9895, Jan. 29, 1981, as amended by Amdt. 178–65, 46 FR 24184, Apr. 30, 1981; Amdt. 178–97, 56 FR 66284 and 66287, Dec. 20, 1991]

§178.270–3 Materials of construction.

(a) Each portable tank must be constructed of carbon or alloy steels. Materials included in part UHT of the ASME Code or equivalent materials are not authorized. Any materials used in the tank shell must conform to a recognized national standard and must be suitable for the external environments in which the tank will be carried. The minimum elongation for any material must be 20 percent or greater.

(b) The maximum stress allowed for a material shall be determined using one of the following methods:

(1) 1.5 times the specified values for the material at 93° C (200° F) in Section VIII, Division 1 of the ASME Code;

(2) Derived by test for the actual yield and tensile strengths at 93° C (200° F) for the actual group of plates used to fabricate the tank using the methods described in §178.270–3(d); or

(3) Derived from the minimum yield and tensile strengths at 93° C (200° F) specified by the national standard to which the material is manufactured using the methods described in §178.270–3(d).

(c) Maximum allowable stress values, derived for an actual group of plates, that are based on actual tensile and yield strengths of the material at 93° C (200° F) shall not be greater than 120 percent of the specified minimum yield and tensile strength specified in the national standard to which the material is manufactured.

(d) The maximum allowable stress values must be derived from the following criteria:

(1) For austenitic steels;

(i) When the yield strength is determined using the 0.2 percent offset, 93.75 percent of the yield strength.

(ii) When the yield strength is determined using the 1.0 percent offset, 75 percent of the yield strength.

(2) For carbon and low alloy steels, the yield strength is determined using the 0.2 percent offset. The maximum allowable stress value is the lower of

93.75 percent of the yield strength or 37.5 percent of the tensile strength.

(e) For purposes of these specifications, tensile strength, yield strength and elongation must be determined using a specimen having a gauge length:

$L_0=5.65(S_0)^{1/2}$

where:

L_0=the gauge length of the specimen—millimeters (inches); and

S_0=the cross sectional area of the specimen—square millimeters (square inches).

Tensile tests and analysis of results must be in accordance with ''ISO 82–1974(e) Steels-Tensile Testing.'' The yield strength in tension shall be the stress corresponding to a permanent strain of 0.2 percent of the gauge length, except that for high alloy austenitic steels the yield strength shall be the stress corresponding to a permanent strain of 0.2 or 1.0 percent of the gauge length as appropriate. The elongation must be at least 20 percent.

(f) If maximum allowable stress values or minimum tank wall thicknesses are based on the actual yield strength, the actual tensile strength, or the actual elongation for the material used to fabricate the tank, the test records or certification of test results by the material producer or tank manufacturer must be approved by the approval agency, retained by the tank manufacturer for a period not less than 15 years, and made available to any duly identified representative of the Department or the owner of the tank.

[Amdt. 178–65, 46 FR 9895, Jan. 29, 1981]

§ 178.270–4 Structural integrity.

(a) *Maximum stress values.* The maximum calculated stress value in a tank at the Test Pressure must be less than or equal to that specified for the material of construction at 93°C. (200°F.) in § 178.270–3 of this part.

(b) *Tank shell loadings.* Tank shells, heads, and their fastenings shall be designed to prevent stresses in excess of two thirds those specified in § 178.270–3 of this part. The design calculations must include the forces imposed by each of the following loads:

(1) An internal pressure equal to the maximum allowable working pressure less 1 bar (14.5 psig) in combination with the simultaneously applied loadings of 3W vertically downward, 2W longitudinally, and 1W laterally acting through the center of the tank (W is the maximum permissible weight of the loaded tank and its attachments), and the requirements of paragraphs (b)(4), (5) and (6) of this section;

(2) An internal pressure equal to the maximum allowable working pressure less 1 bar (14.5 psig), in combination with the simultaneously applied loadings of 1W vertically upward, 2W longitudinally, and 1W laterally acting through the center of the tank (W is the maximum permissible weight of the loaded tank and its attachment), and the requirements of paragraphs (b)(4), (5) and (6) of this section;

(3) The load on the tank head resulting from an internal pressure equal to the maximum allowable working pressure, less 1 bar (14.5 psig), in combination with the dynamic pressure resulting from a longitudinal deceleration of 2 ''g'', and the requirements of paragraphs (b)(4), (5) and (6) of this section;

(4) Loads resulting from any discontinuities between tank shell and heads;

(5) Superimposed loads such as operating equipment, insulation, linings and piping; and

(6) Reactions of supporting lugs and saddles or other supports.

(c) The shell thickness used in calculating the resulting stress levels in a tank shall be exclusive of any corrosion allowance.

[Amdt. 178–65, 46 FR 9895, Jan. 29, 1981]

§ 178.270–5 Minimum thickness of shells and heads.

(a) For the purposes of this section, mild steel is steel with a guaranteed minimum tensile strength of 37 decanewtons per square millimeter (53,650 p.s.i.) and a guaranteed elongation of 27 percent or greater.

(b) Except as otherwise provided in this subchapter, the shell and heads of each portable tank constructed of reference mild steel:

(1) With a maximum cross-sectional dimension of 1.8 meters (5.9 feet) or less, shall be at least 5mm (0.197 inches) thick; or,

(2) With a maximum cross-sectional dimension exceeding 1.8 meters (5.9

feet), shall be at least 6.35mm (0.250 inches) thick.

(c) The minimum thickness of the shell and heads of each portable tank constructed of a steel other than the reference mild steel, shall be obtained from the following formula:

Formula for metric units

$e_1=(10e_0)/(Rm_1\ A_1)^{1/3}$

Formula for nonmetric units

$e_1=(112.3e_0)/(Rm_1\ A_1)^{1/3}$

where:

e_0=Required thickness of the reference steel from §178.270–5(b)—millimeters (inches);

e_1=Equivalent thickness of the steel used—millimeters (inches);

Rm_1=Specified minimum tensile strength of the steel used—decanewtons per square millimeter (p.s.i.); and

A_1=Specified minimum percentage elongation of the steel used—percent times 100 (i.e., if 20% use 20.0).

(d) When other than the standard minimum thickness for the reference mild steel is specified for a tank in this subchapter, the specified minimum shell and head thickness must be at least equal to the larger of the thicknesses calculated from the formula given in §178.270–5(c) and the following formula:

Formula for metric units

$e_1=(10e_0\ d_1)/1.8(Rm_1\ A_1)^{1/3}$

Formula for nonmetric units

$e_1=(112.3e_0\ d_1)/5.9(Rm_1\ A_1)^{1/3}$

where:

e_1=Equivalent thickness of the steel used—millimeters (inches);

e_0=The specified minimum shell and head thickness of the reference mild steel specified in the IM Tank Table—millimeters (inches);

d_1=Actual outside diameter of the tank—meters (feet);

Rm_1=Specified minimum tensile strength of the steel used—decanewtons per square millimeter (p.s.i.); and

A_1=Specified minimum percentage elongation of the steel used—percent times 100 (i.e., if 20% use 20.0).

NOTE: For paragraphs (c) and (d) of this section the actual values for the tensile strength and percent elongation for the steel, as determined through tests on specimens from the group of plates to be used in the fabrication of the tank, may be substituted for the specified minimum values in the calculation prescribed in this paragraph (See §178.270–3 of this part). Test records or certification of test results by the material producer or tank manufacturer must be retained by the tank manufacturer for a period not less than 15 years and must be made available to the Department or the owner of the tank.

[Amdt. 178–65, 46 FR 9896, Jan. 29, 1981, as amended by Amdt. 178–97, 56 FR 66284, Dec. 20, 1991; 57 FR 45465, Oct. 1, 1992; Amdt. 178–99, 58 FR 51534, Oct. 1, 1993]

§178.270–6 Tank supports, frameworks and lifting attachments.

(a) Each portable tank must be constructed with a permanent support structure that provides a secure base in transport. Skids, frameworks, cradles, or similar devices are acceptable. The calculated stress in tank supports, frameworks, and lifting attachments must not exceed 80 percent of the specified minimum yield strength of the material of construction under the applicable loading conditions specified in §178.270–4(b).

(b) An IM portable tank that meets the definition of ''container'' in §450.3(a)(3) must meet the requirements of parts 450 through 453 of this title, in addition to the requirements of this subchapter.

[Amdt. 178–65, 46 FR 9896, Jan. 29, 1981]

§178.270–7 Joints in tank shells.

Joints in tank shells must be made by fusion welding. Such joints and their efficiencies must be as required by the ASME Code. Weld procedures and welder performance must be ASME Code qualified or must be qualified by the approval agency in accordance with the procedures in the ASME Code, Section IX, Welding and Brazing Qualifications. A record of each qualification must be retained by the manufacturer for the period prescribed in ASME Code, Section VIII, Pressure Vessels, and must be made available to any duly identified representative of the Department and the owner of the tank.

[Amdt. 178–65, 46 FR 9896, Jan. 29, 1981; 46 FR 24184, Apr. 30, 1981]

§ 178.270–8 Protection of valves and accessories.

Each valve, fitting, accessory, safety device, gauging device, and other appurtenance shall be adequately protected against mechanical damage.

[Amdt. 178–65, 46 FR 9896, Jan. 29, 1981]

§ 178.270–9 Inspection openings.

Each portable tank must be fitted with a manhole or other inspection opening sited above the maximum liquid level to allow for complete internal inspection and adequate access for maintenance and repair of the interior. Each portable tank with a capacity of more than 1894 liters (500 gallons) must be fitted with an elliptical or round manhole at least 279 × 381 millimeters (11 × 15 inches), or 254 × 405 millimeters (10 × 16 inches), or with a circular manhole at least 381 millimeters (15 inches) in diameter. Any inspection opening and closure must be designed and reinforced as required by the ASME Code.

[Amdt. 178–65, 46 FR 9896, Jan. 29, 1981, as amended by Amdt. 178–104, 59 FR 49135, Sept. 26, 1994]

§ 178.270–10 External design pressure.

(a) Each portable tank not fitted with vacuum relief devices must be designed to withstand a positive external pressure differential of at least 0.4 bar (6 p.s.i.).

(b) Each portable tank fitted with vacuum relief devices must be designed to withstand a positive external pressure differential not less than the set pressure of the vacuum relief device and in any case at least 0.21 bar (3 p.s.i.).

[Amdt. 178–65, 46 FR 9896, Jan. 29, 1981]

§ 178.270–11 Pressure and vacuum relief devices.

(a) *Relief devices required.* Each portable tank, or each independent compartment of a portable tank, must be fitted with pressure relief devices in accordance with the following:

(1) Each portable tank, or each independent compartment of a portable tank, with a capacity of more than 1893 liters (500 gallons), must be provided with a primary pressure relief device consisting of a spring-loaded pressure relief valve and, in addition, may have one or more emergency pressure relief devices that may be a spring-loaded pressure relief valve, a frangible disc or fusible element in parallel with the primary pressure relief device.

(2) Each portable tank, or each independent compartment of a portable tank, with a capacity of 1893 liters (500 gallons) or less, must be fitted with a primary pressure relief device that may either be a frangible disc or a spring-loaded pressure relief valve.

(3) If a frangible disc is inserted in series with required pressure relief valve, the space between the frangible disc and the pressure relief valve must be provided with a suitable tell-tale indicator to permit detection, prior to and during shipment, of disc rupture, pinholing, or leakage which could cause a malfunction of the pressure relief system. The frangible disc must rupture at a tank pressure within the range specified in paragraph (c)(1) of this section.

(b) *Location and construction of relief devices.* (1) Pressure relief devices must be spring-loaded valves, frangible discs, or fusible elements. Vacuum relief devices must be capable of reclosing in any attitude. Each pressure relief device inlet must be situated in the vapor space of the tank. The discharge from any device must be unrestricted and directed to prevent impingement upon the tank shell or structural framework. Protective devices which deflect the flow of vapor are permissible provided the required vent capacity is maintained. Pressure and vacuum relief devices including their inlets must be sited on the top of the tank in a position as near as possible to the longitudinal and transversal center of the tank within the following limitation:

(i) Longitudinally on the tank within 107 cm (3½ feet) or ⅙ the tank length, whichever is less, from the top center of the tank; and

(ii) Transversally within 12 degrees of the tank top.

(2) Except for a relief device installed in a piping system, each relief device must provide unrestricted venting under all conditions. Each pressure relief system, including any piping, must provide a venting capacity at least equal to the venting capacity specified

in §178.270–11(d) for the tank on which the system is installed.

(3) Fusible elements, when installed, must not be protected from direct communication with external heat sources.

(4) Spring-loaded pressure relief valves must be constructed in a manner to prevent unauthorized adjustment of the relief setting.

(c) *Pressure settings of relief devices*—(1) *Primary pressure relief devices.* The primary relief device required by paragraph (a) of this section must be set to function in the range of—

(i) No less than 67 percent and no greater than 83 percent of test pressure for tanks hydrostatically tested under §178.270–13(a) of this subpart at a gauge pressure below 455 kPa (66 psi). Spring-loaded pressure relief valves must close after discharge at a pressure not less than 80 percent of start-to-discharge pressure.

(ii) No less than 67 percent and no greater than 74 percent of test pressure for tanks hydrostatically tested under §178.270–13(a) of this subpart at a gauge pressure of 455 kPa (66 psi) or higher. Spring-loaded pressure relief valves must close after discharge at a pressure not less than 90 percent of start-to-discharge pressure.

(2) *Emergency pressure relief devices.* Each frangible disc, other than one used as a primary relief device in accordance with paragraph (b)(2) of this section, must be designed to burst at a pressure greater than 83 percent of and less than or equal to tank hydrostatic test pressure. Each spring-loaded pressure relief valve used as an emergency pressure relief device must be set to operate at no less than 83 percent of hydrostatic test pressure and be fully open at test pressure.

(3) *Fusible elements.* Fusible elements must have a nominal yield temperature greater than the highest tank operating temperature and less than or equal to 121°C (250°F). The pressure developed in the tank at the fusible element yield temperature must be below the test pressure of the tank.

(4) *Vacuum relief devices.* Vacuum relief devices, when used, must be designed to provide total containment of product under normal and accident conditions and must be set to open at a nominal external overpressure of not less than 0.21 bar (3 pounds per square inch) but not greater than the external pressure for which the tank is designed. Each vacuum relief device must have a minimum cross sectional flow area of 2.84 cm^2 (0.44 square inches).

(d) *Venting capacity of pressure relief devices*—(1) *Pressure relief valves (spring-loaded).* Each pressure relief valve must have a minimum vent capacity of at least 170 standard cubic meters per hour (SCMH) (6,000 standard cubic feet per hour (SCFH)). The minimum total pressure relief valve vent capacity for each tank shall be 340 SCMH (12,000 SCFH) per 32.5m^2 (350 square feet) of exposed tank area, but in any case at least 340 SCMH (12,000 SCFH).

(2) *Total tank vent capacity.* The total vent capacity of all pressure relief devices installed on each portable tank must be sufficient with all devices operating to limit the pressure in the tank to less than or equal to the test pressure. Except as provided in paragraph (d)(3) or (d)(4) of this section, the total vent capacity must be at least equal to that shown in the following table:

TABLE I—*Minimum total vent capacity*

[Metric units table in cubic meters of air per hour at atmospheric pressure and 15°C]

Exposed area square meters	Cubic meters free air per hour	Exposed area square meters	Cubic meters free air per hour
2	841	37.5	9.306
3	1,172	40	9,810
4	1,485	42.5	10,308
5	1,783	45	10,806
6	2,069	47.5	11,392
7	2,348	50	11,778
8	2,621	52.5	12,258
9	2,821	55	12,732
10	3,146	57.5	13,206
12	3,655	60	13,674
14	4,146	62.5	14,142
16	4,625	65	14,604
18	5,092	67.5	15,066
20	5,556	70	15,516
22.5	6,120	75	16,422
25	6,672	80	17,316
27.5	7,212	85	18,198
30	7,746	90	19,074
32.5	8,268	95	19,938
35	8,790	100	20,790

[Nonmetric units in cubic feet of air per hour at atmospheric pressure and 59°F]

Exposed area square feet	Cubic feet free air per hour	Exposed area square feet	Cubic feet free air per hour
20.	27,600	275	237,000
30	38,500	300	256,000
40	48,600	350	289,500
50	58,600	400	322,100
60	67,700	450	355,900
70	77,000	500	391,000
80	85,500	550	417,500
90	94,800	600	450,000
100	104,000	650	479,000
120	121,000	700	512,000
140	136,200	750	540,000
160	152,100	800	569,000
180	168,200	850	597,000
200	184,000	900	621,000
225	199,000	950	656,000
250	219,500	1,000	686,000

Note: Interpolate for intermediate sizes.

(3) Notwithstanding the minimum total vent capacity shown in Table I, of paragraph (d)(2), a tank in dedicated service may have a lesser total vent capacity provided the approval certificate required by § 173.32a of this subchapter specifies the hazardous materials for which the tank is suitable. The lesser total vent capacity must be determined in accordance with the following formula:

Formula for metric units

$$Q=5{,}660{,}000\ A^{0.82}\ (ZT)^{0.5}/(LC)(M^{0.5})$$

Formula for nonmetric units

$$Q=37{,}980{,}000\ A^{0.82}\ (ZT)^{0.5}/(LC)(M^{0.5})$$

where:

Q=The total required venting capacity, in cubic meters of air per hour at standard conditions of 15.6°C and 1 atm (cubic feet of air per hour at standard conditions of 60°F and 14.7 psia);

T=The absolute temperature of the vapor at the venting conditions—degrees Kelvin (°C+273) [degrees Rankine (°F+460)];

A=The exposed surface area of tank shell—square meters (square feet);

L=The latent heat of vaporization of the lading—calories per gram (BTU/lb);

Z=The compressibiliy factor for the vapor (if this factor is unknown, let Z equal 1.0);

M=The molecular weight of vapor;

C=A constant derived from (K), the ratio of specific heats of the vapor. If (K) is unknown, let C=315.

$$C=520[K(2/(K+1))^{[(K+1)/(K-1)]}]^{1/2}$$

where:

$K=C_p/C_v$

C_p=The specific heat at constant pressure, in -calories per gram degree centigrade (BTU/lb°F.); and

C_v=The specific heat at constant volume, in -calories per gram degree centigrade (BTU/lb°F.).

(4) The required total venting capacity determined by using Table I or paragraph (d)(3) of this section may be reduced for insulated tanks to Q_t by the following formula:

$$Q_t=FQ_1$$

where:

Q_t=The total required venting capacity of the insulated tank;

Q_1=The total venting capacity required for an uninsulated tank according to Table I or paragraph (d)(3) of this section;

F=A coefficient with a value greater than or equal to 0.25 according to the following formula:

Formula for metric units

$$F=8U(649-t)/93.5\times10^6$$

Formula for nonmetric units

$$F=8U(1200-t)/34{,}500$$

where:

U=The thermal conductance of the insulation system taken at 38°C (100°F), in gram calories per hour sq. meter °C (BTU per hour sq. feet °F); and

t=The actual temperature of the substance at loading, in °C (°F).

(5) Insulation systems, used for the purpose of reducing the venting capacity, must be approved by the approval agency. In all cases, insulation systems approved for this purpose must:

(i) Remain effective at all temperatures up to 649°C (1200°F); and

(ii) Be jacketed with a material having a melting point of 649°C (1200°F) or greater.

(6) The flow capacity rating of any pressure relief device must be certified by the manufacturer to be in accordance with the applicable provisions of the ASME Code with the following exceptions:

(i) The ASME Code stamp is not required; and

(ii) The flow capacity certification test for spring loaded pressure relief valves may be conducted at a pressure not to exceed 120% of the set pressure provided the stamped flow capacity rating is not greater than 83% of the average capacity of the valves tested.

(e) *Markings on pressure and vacuum relief devices.* The following information shall be plainly displayed on each pressure relief device:

(1) The pressure or, when appropriate, the temperature at which the device is set to function;

(2) Except for vacuum relief devices, the rated flow capacity of air discharged per minute at 15°C (59°F) and atmospheric pressure, at:

(i) The set pressure for frangible discs;

(ii) No greater than 20% above the start to discharge pressure for spring-loaded relief devices; or

(iii) The fusing temperature for fusible elements.

(3) The manufacturer's name and catalog number; and

(4) The allowable tolerances at the start to discharge pressure and the allowable tolerances at the discharge temperature.

[Amdt. 178–65, 46 FR 9897, Jan. 29, 1981; 46 FR 24184, Apr. 30, 1981; as amended by Amdt. 178–97, 55 FR 52716, Dec. 21, 1990; Amdt. 178–99, 58 FR 51534, Oct. 1, 1993; Amdt. 178–104, 59 FR 49135, Sept. 26, 1994]

§178.270–12 Valves, nozzles, piping, and gauging devices.

(a) All tank nozzles, except those provided for filling and discharge connections below the normal liquid level of the tank, relief devices, thermometer wells, and inspection openings, must be fitted with manually operated stop valves located as near the shell as practicable either internal or external to the shell. Each filling and discharge connection located below the normal liquid level of the tank must be equipped with an internal discharge valve. A tank nozzle installed in the vapor space to provide a filling or cleaning opening, which is closed by a blank flange or other suitable means, need not be provided with a manually operated stop valve. A tank nozzle installed for a thermometer well or inspection opening need not be provided with a manually operated stop valve.

(b) Each valve must be designed and constructed to a rated pressure not less than the maximum allowable working pressure of the tank. Each stop valve with a screwed spindle must be closed by a clockwise motion of the handwheel. All valves must be constructed to prevent unintentional opening.

(c) Each internal discharge valve shall be self-closing, located inside the tank, within the welded flange or within its companion flange.

(d) A shear section must be located outboard of each internal discharge valve seat and within 10.2 cm (4 inches) of the vessel. The shear section must break under strain without affecting the product retention capabilities of the tank and any attachments.

(e) All piping must be of suitable material. Welded joints must be used wherever practicable. The bursting strength of all piping and pipe fittings must be at least 4 times the maximum allowable working pressure of the tank. Piping must be supported in such a manner as to prevent damage due to thermal stresses, jarring or vibration.

(f) All nozzles and tank shell penetrations for nozzles shall be designed and constructed in accordance with the ASME Code.

(g) Glass liquid level gauges, or gauges of other easily destructible material, which are in direct communication with the contents of the tank are prohibited.

[Amdt. 178–65, 46 FR 9898, Jan. 29, 1981; 46 FR 24184, Apr. 30, 1981, as amended by Amdt. 178–117, 61 FR 50628, Sept. 26, 1996]

§178.270–13 Testing.

(a) *Hydrostatic test.* Each portable tank and all piping, valves, and other attachments which are subject to the pressure of the contents of the tank, except pressure relief devices, must be hydrostatically tested by completely filling the tank (including domes, if any) with water or other liquid having a similar density and viscosity and applying a pressure of at least 150 percent of the maximum allowable working pressure. The pressure shall be maintained for at least 10 minutes. While under pressure, the tank shall be inspected for leakage, undue distortion, or other conditions which indicate weakness or which might render the tank unsafe for transportation service. Failure to successfully meet the test criteria shall be deemed evidence of failure to meet the requirements of this specification. Tanks failing to pass the test shall be suitably repaired and must successfully pass the prescribed

tests prior to use for transporting any hazardous material.

(b) *Testing of internal coils.* Internal coils, if installed, must be hydrostatically tested to an internal pressure of 13.8 bar (200 psig) or 150 percent of the rated pressure of the coils, whichever is greater.

(c) *Tank container qualification test.* For each tank design, a prototype tank, using a framework for containerized transport, must fulfill the requirements of parts 450–453 of this title for compliance with the requirements of Annex II of the International Convention for Safe Containers. In addition, the following tests must be completed without leakage or deformation that would render the tank unsuitable for use:

(1) *Longitudinal inertia.* The tank loaded to its maximum gross weight must be positioned with its longitudinal axis vertical. It shall be held in this position for five minutes by support at the lower end of the base structure providing vertical and lateral restraint and by support at the upper end of the base structure providing lateral restraint only.

(2) *Lateral inertia.* The tank loaded to its maximum gross weight must be positioned for five minutes with its transverse axis vertical. It shall be held in this position for five minutes by support at the lower side of the base structure providing vertical and lateral restraint and by support at the upper side of the base structure providing lateral restraint only.

(d) *Approval of smaller tanks of the same design.* Design approval must include the prototype testing of at least one tank of each design and each size; however, a set of tests made on a tank of one size may serve for the approval of smaller tanks with equal or lesser diameter and length) made of the same material and thickness by the same fabrication technique and with identical supports and equivalent closures and other appurtenances.

(e) *Pressure and vacuum relief devices.* Each spring loaded relief device must be tested for the accuracy of the setting prior to installation on a tank and must be effectively sealed to maintain the required setting.

[Amdt. 178–65, 46 FR 9898, Jan. 29, 1981; 46 FR 24184, Apr. 30, 1981]

§ 178.270–14 Marking of tanks.

(a) *General.* Each tank must bear a corrosion resistant metal identification plate that is permanently attached to the portable tank and readily accessible for inspection. The information required in paragraph (b), and, when appropriate, paragraph (c) of this section must be stamped, embossed or otherwise marked by an equally durable method on the plate in characters at least 3 mm (0.118 inches) high. The plate must not be painted.

(b) *Required information.* At least the following information must appear on the metal identification plate for each tank:

(1) US DOT Specification number.

(2) Country of manufacture.

(3) Manufacturer's name.

(4) Date of manufacture.

(5) Manufacturer's serial number.

(6) Identification of USA/DOT approval agency and approval number.

(7) Maximum allowable working pressure, in bar or psig.

(8) Test pressure, in bar or psig.

(9) Total measured water capacity at 20°C (68°F), in liters or gallons.

(10) Maximum allowable gross weight, in kg or lbs.

(11) Equivalent minimum shell thickness in mild steel, in mm or inches.

(12) Tank material and specification number.

(13) Metallurgical design temperature range, in °C or °F.

(c) *Additional information.* The following additional information must appear on the metal identification plate when applicable:

(1) Lining material.

(2) Heating coil maximum allowable working pressure in bar and psig.

(3) Corrosion allowance, in mm or in.

(d) In addition to the markings required above, each tank used in international transport must have a Safety Approval Plate containing the information required in §§ 451.21 through 451.25 of this title.

(e) Nothing in this section shall be deemed to preclude the display of other

pertinent information on the required metal identification plate.

[Amdt. 178–65, 46 FR 9899, Jan. 29, 1981, as amended at 62 FR 51561, Oct. 1, 1997]

§178.271 Specification IM 101 steel portable tanks.

§178.271–1 General requirements.

(a) Specification IM 101 portable tanks must conform to the general design and construction requirements in §178.270 of this subpart in addition to the specific design requirements contained in this section.

(b) The maximum allowable working pressure of each tank shall be equal to or greater than 1.75 bar (25.4 psig) and less than 6.8 bar (100 psig).

(c) Each tank shall be designed and constructed in accordance with the requirements of Section VIII, Division 1, of the ASME Code except as limited or modified in this section or in §178.270 of this subpart. ASME certification or stamp is not required.

[Amdt. 178–65, 46 FR 9899, Jan. 29, 1981, as amended by Amdt. 178–104, 59 FR 49135, Sept. 26, 1994]

§178.272 Specification IM 102 steel portable tanks.

§178.272–1 General requirements.

(a) Specification IM 102 portable tanks must conform to the general design and construction requirements in §178.270 of this subpart in addition to the specific design requirements contained in this section.

(b) The maximum allowable working pressure of each tank shall be less than 1.75 bar (25.4 psig) but at least 1.0 bar (14.5 psig).

(c) Each tank shall be designed and constructed in accordance with the requirements of Section VIII, Division 1, of the ASME Code except as limited or modified in this section or in §178.270 of this subpart. ASME certification or stamp is not required.

[Amdt. 178–65, 46 FR 9899, Jan. 29, 1981, as amended by Amdt. 178–104, 59 FR 49135, Sept. 26, 1994]

§178.272–2 Minimum thickness of shells and heads.

(a) The approval agency may authorize a minimum thickness less than that required by §178.270–5 of this subpart where additional protection against tank puncture provides equal integrity.

(b) The shell and head thickness of a tank must be at least:

(1) 3.18 mm (0.125 inches) for a tank with a maximum cross-sectional dimension of 1.8 meters (5.9 feet) or less; or

(2) 4 mm (0.157 inches) for a tank constructed of the reference mild steel having a maximum cross-sectional dimension exceeding 1.8 meters (5.9 feet). For tanks having a maximum cross-sectional dimension exceeding 1.8 meters (5.9 feet) constructed of other steels, an equivalent head and shell thickness calculated in accordance with §178.270–5(c) of this subpart may be used, subject to an absolute minimum of 3.18 mm (0.125 inches).

(c) The following additional puncture protection systems are authorized:

(1) An overall external structural protection, such as a jacket, which is rigidly secured to the tank with a layer of cushioning material installed between the external structural protection and the tank; or

(2) A complete framework surrounding the tank including both longitudinal and transverse structural members.

[Amdt. 178–65, 46 FR 9899, Jan. 29, 1981]

Subpart I—[Reserved]

Subpart J—Specifications for Containers for Motor Vehicle Transportation

SOURCE: 29 FR 18975, Dec. 29, 1964, unless otherwise noted. Redesignated at 32 FR 5606, Apr. 5, 1967.

§178.318 Specification MC 201; container for detonators and percussion caps.

§178.318–1 Scope.

(a) This specification pertains to a container to be used for the transportation of detonators and percussion caps in connection with the transportation of liquid nitroglycerin, desensitized liquid nitroglycerin or diethylene glycol dinitrate, where any or all of such types of caps may be used

for the detonation of liquid nitroglycerin, desentitized liquid nitroglycerin or diethylene glycol dinitrate in blasting operations. This specification is not intended to take the place of any shipping or packing requirements of this Department where the caps in question are themselves articles of commerce.

(b) [Reserved]

[29 FR 18975, Dec. 29, 1964. Redesignated at 32 FR 5606, Apr. 5, 1967, and amended by Amdt. 178–60, 44 FR 70733, Dec. 10, 1979]

§ 178.318–2 Container.

(a) Every container for detonators and percussion caps coming within the scope of this specification shall be constructed entirely of hard rubber, phenolresinous or other resinous material, or other nonmetallic, nonsparking material, except that metal parts may be used in such locations as not in any event to come in contact with any of the caps. Space shall be provided so that each detonator of whatever nature may be inserted in an individual cell in the body of the container, into which each such cap shall snugly fit. There shall be provided no more than twenty (20) such cellular spaces. Space may be provided into which a plurality of percussion caps may be carried, provided that such space may be closed with a screw cap, and further provided that each or any such space is entirely separate from any space provided for any detonator. Each cellular space into which a detonator is to be inserted and carried shall be capable of being covered by a rotary cover so arranged as to expose not more than one cell at any time, and capable of rotation to such a place that all cells will be covered at the same time, at which place means shall be provided to lock the cover in place. Means shall be provided to lock in place the cover for the cells provided for the carrying of detonators. The requirement that not more than one cell be exposed at one time need not apply in the case of detonators, although spaces for such caps and detonators shall be separate. Sufficient annular space shall be provided inside the cover for such detonators that, when the cover is closed, there will be sufficient space to accommodate the wires customarily attached to such caps. If the material is of such a nature as to require treatment to prevent the absorption of moisture, such treatment shall be applied as shall be necessary in order to provide against the penetration of water by permeation. A suitable carrying handle shall be provided, except for which handle no part of the container may project beyond the exterior of the body.

(b) Exhibited in plates I and II are line drawings of a container for detonators and percussion caps, illustrative of the requirements set forth in § 178.318–2(a). These plates shall not be construed as a part of this specification.

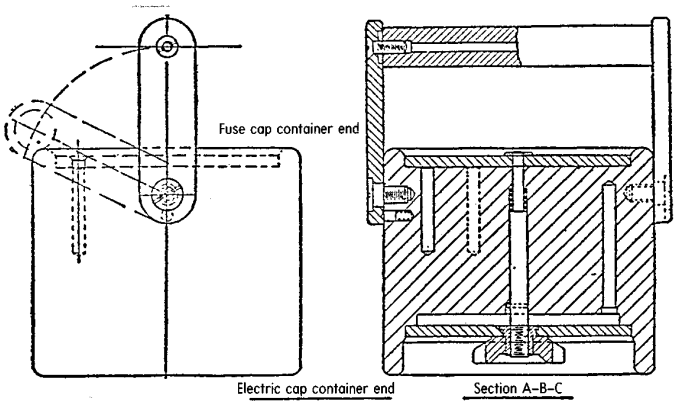

BLASTING CAP CONTAINER
PLATE I

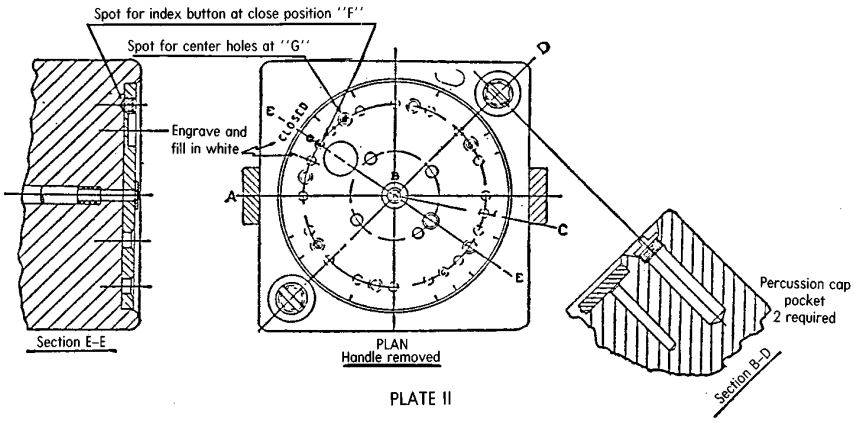

PLATE II

[29 FR 18975, Dec. 29, 1964. Redesignated at 32 FR 5606, Apr. 5, 1967, and amended by Amdt. 178–60, 44 FR 70733, Dec. 10, 1979]

§178.318–3 Marking.

Each container must be marked as prescribed in §173.24 of this subchapter.

[Amdt. 178–40, 41 FR 38181, Sept. 9, 1976]

§178.320 General requirements applicable to all DOT specification cargo tank motor vehicles.

(a) *Definitions.* For the purposes of this subpart,

Cargo tank, as defined in §171.8 of this subchapter, means a bulk packaging which:

(1) Is a tank intended primarily for the carriage of liquids or gases (including appurtenances, reinforcements, fittings, and closures). (For definition of ''tank'', see §178.345–1(c), §178.337–1, or §178.338–1, as applicable);

(2) Is permanently attached to or forms a part of a motor vehicle but which, by reason of its size, construction or attachment to a motor vehicle

is loaded or unloaded without being removed from the motor vehicle; and

(3) Is not fabricated under a specification for cylinders, portable tanks, tank cars, or multi-unit tank car tanks.

Cargo tank motor vehicle, as defined in § 171.8 of this subchapter, means a motor vehicle with one or more cargo tanks permanently attached to or forming an integral part of the motor vehicle.

Cargo tank wall means those parts of the cargo tank which make up the primary lading retention structure including shell, bulkheads, and fittings which, when closed during transportation of lading, yields the minimum volume of the cargo tank assembly.

Design type means one or more cargo tanks which are made—

(1) To the same specification;

(2) By the same manufacturer;

(3) To the same engineering drawings and calculations, except for minor variations in piping which do not affect the lading retention capability of the cargo tank;

(4) Of the same materials of construction;

(5) To the same cross-sectional dimensions;

(6) To a length varying by no more than five percent;

(7) With the volume varying by no more than five percent (due to a change in length only); and

(8) For the purposes of § 178.338 only, with the same insulation system.

Manufacturer means any person engaged in the manufacture of a DOT specification cargo tank, cargo tank motor vehicle or cargo tank equipment which forms part of the cargo tank wall. This term includes attaching a cargo tank to a motor vehicle or to a motor vehicle suspension component which involves welding on the cargo tank wall. A manufacturer shall register with the Department in accordance with subpart F of part 107 in subchapter A of this chapter.

(b) *Design certification.* (1) Each cargo tank design type shall be certified in conformance with the specification requirements by a Design Certifying Engineer registered in accordance with subpart F of part 107.

(2) The Design Certifying Engineer shall furnish to the manufacturer a certificate to indicate compliance with the specification requirements. The certificate must include the sketches, drawings, and calculations used for certification. Each certificate, including sketches, drawings, and calculations, shall be signed by the Design Certifying Engineer.

(3) The manufacturer shall retain the design certificate at his principal place of business for as long as he manufactures DOT specification cargo tanks.

(c) *Exceptions to the ASME Code.* Unless otherwise specified, when exceptions are provided in this subpart from compliance with certain paragraphs of the ASME Code, compliance with those paragraphs is not prohibited.

[Amdt. 178–89, 55 FR 37055, Sept. 7, 1990, as amended by Amdt. 178–98, 58 FR 33306, June 16, 1993; Amdt. 178–118, 61 FR 51339, Oct. 1, 1996]

§ 178.337 Specification MC 331; cargo tank motor vehicle primarily for transportation of compressed gases as defined in subpart G of part 173 of this subchapter.

§ 178.337–1 General requirements.

(a) *ASME Code construction.* Tanks must be—

(1) Seamless or welded construction, or a combination of both;

(2) Designed and constructed in accordance with the ASME Code;

(3) Made of steel or aluminum; however, if aluminum is used, the cargo tank must be insulated and the hazardous material to be transported must be compatible with the aluminum (see §§ 178.337–1(e)(2), 173.315(a) Table, and 178.337–2(a)(1) of this subchapter); and

(4) Covered with a steel jacket if the cargo tank is insulated and used to transport a flammable gas (see § 173.315(a) Table Note 11 of this subchapter).

(b) *Design pressure.* The design pressure of a cargo tank authorized under this specification shall be not less than the vapor pressure of the commodity contained therein at 115° F. or as prescribed for a particular commodity in § 173.315(a) of this subchapter, except that in no case shall the design pressure of any cargo tank be less than 100 p.s.i.g. nor more than 500 p.s.i.g.

NOTE 1: The term *design pressure* as used in this specification, is identical to the term *maximum allowable working pressure* as used in the ASME Code.

(c) *Openings.* (1) Excess pressure relief valves shall be located in the top of the cargo tank or heads.

(2) A chlorine cargo tank shall have only one opening. That opening shall be in the top of the cargo tank and shall be fitted with a nozzle that meets the following requirements:

(i) On a cargo tank manufactured on or before December 31, 1974, the nozzle shall be protected by a dome cover plate which conforms to either the standard of The Chlorine Institute, Inc., Dwg. 103–3, dated January 23, 1958, or to the standard specified in paragraph (c) (2) (ii) of this section.

(ii) On a cargo tank manufactured on or after January 1, 1975, the nozzle shall be protected by a manway cover which conforms to the standard of The Chlorine Institute, Inc., Dwg. 103–4, dated September 1, 1971.

(d) *Reflective design.* Every uninsulated cargo tank permanently attached to a cargo tank motor vehicle shall, unless covered with a jacket made of aluminum, stainless steel, or other bright nontarnishing metal, be painted a white, aluminum or similar reflecting color on the upper two-thirds of area of the cargo tank.

(e) *Insulation.* (1) Each cargo tank required to be insulated must conform with the use and performance requirements contained in §§173.315(a) Table and 178.337–1 (a)(3) and (e)(2) of this subchapter.

(2) Each cargo tank intended for chlorine; carbon dioxide, refrigerated liquid; or nitrous oxide, refrigerated liquid service must have suitable insulation of such thickness that the overall thermal conductance is not more than 0.08 Btu per square foot per °F differential per hour. The conductance must be determined at 60 °F. Insulation material used on cargo tanks for nitrous oxide, refrigerated liquid must be noncombustible. Insulating material used on cargo tanks for chlorine must be corkboard or polyurethane foam, with a minimum thickness of 4 inches, or 2 inches minimum thickness of ceramic fiber/fiberglass of 4 pounds per cubic foot minimum density covered by 2 inches minimum thickness of fiber.

(f) *Postweld heat treatment.* Postweld heat treatment must be as prescribed in the ASME Code except that each cargo tank constructed in accordance with Part UHT of the ASME Code must be postweld heat treated. Each chlorine cargo tank must be fully radiographed and postweld heat treated in accordance with the provisions of the ASME Code under which it is constructed. Where postweld heat treatment is required, the cargo tank must be treated as a unit after completion of all the welds in and/or to the shells and heads. The method must be as prescribed in the ASME Code. Welded attachments to pads may be made after postweld heat treatment. A cargo tank used for anhydrous ammonia must be postweld heat treated. The postweld heat treatment must be as prescribed in the ASME Code, but in no event at less than 1050° F. cargo tank metal temperature.

[Order 59–B, 30 FR 579, Jan. 16, 1965. Redesignated at 32 FR 5606, Apr. 5, 1967]

EDITORIAL NOTE: For FEDERAL REGISTER citations affecting §178.337–1, see the List of CFR Sections Affected in the Finding Aids section of this volume.

§178.337–2 Material.

(a) *General.* (1) All material used for construction of the cargo tank and appurtenances must be suitable for use with the commodities to be transported therein and must conform to the requirements of the ASME Code and/or requirements of the American Society for Testing and Materials in all respects.

(2) Impact tests are required on steel used in the fabrication of each cargo tank constructed in accordance with part UHT of the ASME Code. The tests must be made on a lot basis. A lot is defined as 100 tons or less of the same heat treatment processing lot having a thickness variation no greater than plus or minus 25 percent. The minimum impact required for full size specimens must be 20 foot-pounds in the longitudinal direction at −30° F., Charpy V-Notch and 15 foot-pounds in the transverse direction at −30° F., Charpy V-Notch. The required values for subsize specimens must be reduced in direct

proportion to the cross-sectional area of the specimen beneath the notch. If a lot does not meet this requirement, individual plates may be accepted if they individually meet this requirement.

(3) The fabricator shall record the heat, and slab numbers, and the certified Charpy impact values, where required, of each plate used in each cargo tank on a sketch showing the location of each plate in the shell and heads of the cargo tank. Copies of each sketch shall be provided to the owner and retained for at least five years by the fabricator and made available to duly identified representatives of the Department of Transportation.

(4) The direction of final rolling of the shell material shall be the circumferential orientation of the cargo tank shell.

(b) *For a chlorine cargo tank.* Plates, the manway nozzle, and anchorage shall be made of carbon steel which meets the following requirements:

(1) For a cargo tank manufactured on or before December 31, 1974—

(i) Material shall conform to ASTM Specification A–300 –58, titled ''Steel Plates for Pressure Vessels for Service at Low Temperatures'';

(ii) Material shall be Class 1, Grade A, flange or firebox quality;

(iii) Plate impact test specimens, as required under paragraph (a) of this section, shall be of the Charpy keyhole notch type; and

(iv) Plate impact test specimens shall meet the impact test requirements in paragraph (a) of this section in both the longitudinal and transverse directions of rolling at a temperature of minus 45.5 C. (−50° F.).

(2) For a cargo tank manufactured on or after January 1, 1975—

(i) Material shall conform to ASTM Specification A–612–72a, Grade B or A 516, Grade 65 or 70;

(ii) Material shall meet the Charpy V-notch test requirements of ASTM Specification A 20; and

(iii) Plate impact test specimens shall meet the impact test requirements in paragraph (a) of this section in both the longitudinal and transverse directions of rolling at a temperature of minus 40° C. (−40° F.).

(c) A cargo tank in anhydrous ammonia service must be constructed of steel. The use of copper, silver, zinc or their alloys is prohibited. Baffles made from aluminum may be used only if joined to the cargo tank by a process not requiring postweld heat treatment of the cargo tank.

[Order 59–B, 30 FR 579, Jan. 16, 1965. Redesignated at 32 FR 5606, Apr. 5, 1967]

EDITORIAL NOTE: For FEDERAL REGISTER citations affecting § 178.337–2, see the List of CFR Sections Affected in the Finding Aids section of this volume.

§ 178.337–3 Structural integrity.

(a) General requirements and acceptance criteria. (1) Except as provided in paragraph (d) of this section, the maximum calculated design stress at any point in the cargo tank may not exceed the maximum allowable stress value prescribed in Section VIII of the ASME Code, or 25 percent of the tensile strength of the material used.

(2) The relevant physical properties of the materials used in each cargo tank may be established either by a certified test report from the material manufacturer or by testing in conformance with a recognized national standard. In either case, the ultimate tensile strength of the material used in the design may not exceed 120 percent of the ultimate tensile strength specified in either the ASME Code or the ASTM standard to which the material is manufactured.

(3) The maximum design stress at any point in the cargo tank must be calculated separately for the loading conditions described in paragraphs (b), (c), and (d) of this section. Alternate test or analytical methods, or a combination thereof, may be used in place of the procedures described in paragraphs (b), (c), and (d) of this section, if the methods are accurate and verifiable.

(4) Corrosion allowance material may not be included to satisfy any of the design calculation requirements of this section.

(b) The static design and construction of each cargo tank must be in accordance with section VIII of the ASME Code. The cargo tank design must include calculation of stresses generated by design pressure, the weight of lading, the weight of structure supported by the cargo tank wall,

and the effect of temperature gradients resulting from lading and ambient temperature extremes. When dissimilar materials are used, their thermal coefficients must be used in calculation of thermal stresses. Stress concentrations in tension, bending and torsion which occur at pads, cradles, or other supports must be considered in accordance with appendix G of the ASME Code.

(c) *Shell design.* Shell stresses resulting from static or dynamic loadings, or combinations thereof, are not uniform throughout the cargo tank motor vehicle. The vertical, longitudinal, and lateral normal operating loadings can occur simultaneously and must be combined. The vertical, longitudinal and lateral extreme dynamic loadings occur separately and need not be combined.

(1) *Normal operating loadings.* The following procedure addresses stress in the tank shell resulting from normal operating loadings. The effective stress (the maximum principal stress at any point) must be determined by the following formula:

$$S = 0.5(S_y + S_x) \pm [0.25(S_y - S_x)^2 + S_s2]^{0.5}$$

Where:

(i) S = effective stress at any given point under the combination of static and normal operating loadings that can occur at the same time, in psi.

(ii) S_y = circumferential stress generated by the MAWP and external pressure, when applicable, plus static head, in psi.

(iii) S_x = The following net longitudinal stress generated by the following static and normal operating loading conditions, in psi:

(A) The longitudinal stresses resulting from the MAWP and external pressure, when applicable, plus static head, in combination with the bending stress generated by the static weight of the fully loaded cargo tank motor vehicle, all structural elements, equipment and appurtenances supported by the cargo tank wall;

(B) The tensile or compressive stress resulting from normal operating longitudinal acceleration or deceleration. In each case, the forces applied must be 0.35 times the vertical reaction at the suspension assembly, applied at the road surface, and as transmitted to the cargo tank wall through the suspension assembly of a trailer during deceleration; or the horizontal pivot of the truck tractor or converter dolly fifth wheel, or the drawbar hinge on the fixed dolly during acceleration; or anchoring and support members of a truck during acceleration and deceleration, as applicable. The vertical reaction must be calculated based on the static weight of the fully loaded cargo tank motor vehicle, all structural elements, equipment and appurtenances supported by the cargo tank wall. The following loadings must be included:

(*1*) The axial load generated by a decelerative force;

(*2*) The bending moment generated by a decelerative force;

(*3*) The axial load generated by an accelerative force; and

(*4*) The bending moment generated by an accelerative force; and

(C) The tensile or compressive stress generated by the bending moment resulting from normal operating vertical accelerative force equal to 0.35 times the vertical reaction at the suspension assembly of a trailer; or the horizontal pivot of the upper coupler (fifth wheel) or turntable; or anchoring and support members of a truck, as applicable. The vertical reaction must be calculated based on the static weight of the fully loaded cargo tank motor vehicle, all structural elements, equipment and appurtenances supported by the cargo tank wall.

(iv) S_s = The following shear stresses generated by the following static and normal operating loading conditions, in psi:

(A) The static shear stress resulting from the vertical reaction at the suspension assembly of a trailer, and the horizontal pivot of the upper coupler (fifth wheel) or turntable; or anchoring and support members of a truck, as applicable. The vertical reaction must be calculated based on the static weight of the fully loaded cargo tank motor vehicle, all structural elements, equipment and appurtenances supported by the cargo tank wall;

(B) The vertical shear stress generated by a normal operating accelerative force equal to 0.35 times the vertical reaction at the suspension assembly of a trailer; or the horizontal pivot of the upper coupler (fifth wheel) or turntable; or anchoring and support members of a truck, as applicable. The vertical reaction must be calculated based on the static weight of the fully loaded cargo tank motor vehicle, all structural elements, equipment and appurtenances supported by the cargo tank wall;

(C) The lateral shear stress generated by a normal operating lateral accelerative force equal to 0.2 times the vertical reaction at each suspension assembly of a trailer, applied at the road surface, and as transmitted to the cargo tank wall through the suspension assembly of a trailer, and the horizontal pivot of the upper coupler (fifth wheel) or turntable; or anchoring and support members of a truck, as applicable. The vertical reaction must be calculated based on the static weight of the fully loaded cargo tank motor vehicle, all structural elements, equipment and appurtenances supported by the cargo tank wall; and

(D) The torsional shear stress generated by the same lateral forces as described in paragraph (c)(1)(iv)(C) of this section.

(2) *Extreme dynamic loadings.* The following procedure addresses stress in the tank shell resulting from extreme dynamic loadings. The effective stress (the maximum principal stress at any point) must be determined by the following formula:

$$S = 0.5(S_y + S_x) \pm [0.25(S_y - S_x)^2 + S_s2]^{0.5}$$

Where:

(i) S = effective stress at any given point under a combination of static and extreme dynamic loadings that can occur at the same time, in psi.

(ii) S_y = circumferential stress generated by MAWP and external pressure, when applicable, plus static head, in psi.

(iii) S_x = the following net longitudinal stress generated by the following static and extreme dynamic loading conditions, in psi:

(A) The longitudinal stresses resulting from the MAWP and external pressure, when applicable, plus static head, in combination with the bending stress generated by the static weight of the fully loaded cargo tank motor vehicle, all structural elements, equipment and appurtenances supported by the tank wall;

(B) The tensile or compressive stress resulting from extreme longitudinal acceleration or deceleration. In each case the forces applied must be 0.7 times the vertical reaction at the suspension assembly, applied at the road surface, and as transmitted to the cargo tank wall through the suspension assembly of a trailer during deceleration; or the horizontal pivot of the truck tractor or converter dolly fifth wheel, or the drawbar hinge on the fixed dolly during acceleration; or the anchoring and support members of a truck during acceleration and deceleration, as applicable. The vertical reaction must be calculated based on the static weight of the fully loaded cargo tank motor vehicle, all structural elements, equipment and appurtenances supported by the cargo tank wall. The following loadings must be included:

(*1*) The axial load generated by a decelerative force;

(*2*) The bending moment generated by a decelerative force;

(*3*) The axial load generated by an accelerative force; and

(*4*) The bending moment generated by an accelerative force; and

(C) The tensile or compressive stress generated by the bending moment resulting from an extreme vertical accelerative force equal to 0.7 times the vertical reaction at the suspension assembly of a trailer, and the horizontal pivot of the upper coupler (fifth wheel) or turntable; or the anchoring and support members of a truck, as applicable. The vertical reaction must be calculated based on the static weight of the fully loaded cargo tank motor vehicle, all structural elements, equipment and appurtenances supported by the cargo tank wall.

(iv) S_s = The following shear stresses generated by static and extreme dynamic loading conditions, in psi:

(A) The static shear stress resulting from the vertical reaction at the suspension assembly of a trailer, and the horizontal pivot of the upper coupler

(fifth wheel) or turntable; or anchoring and support members of a truck, as applicable. The vertical reaction must be calculated based on the static weight of the fully loaded cargo tank motor vehicle, all structural elements, equipment and appurtenances supported by the cargo tank wall;

(B) The vertical shear stress generated by an extreme vertical accelerative force equal to 0.7 times the vertical reaction at the suspension assembly of a trailer, and the horizontal pivot of the upper coupler (fifth wheel) or turntable; or anchoring and support members of a truck, as applicable. The vertical reaction must be calculated based on the static weight of the fully loaded cargo tank motor vehicle, all structural elements, equipment and appurtenances supported by the cargo tank wall;

(C) The lateral shear stress generated by an extreme lateral accelerative force equal to 0.4 times the vertical reaction at the suspension assembly of a trailer, applied at the road surface, and as transmitted to the cargo tank wall through the suspension assembly of a trailer, and the horizontal pivot of the upper coupler (fifth wheel) or turntable; or anchoring and support members of a truck, as applicable. The vertical reaction must be calculated based on the static weight of the fully loaded cargo tank motor vehicle, all structural elements, equipment and appurtenances supported by the cargo tank wall; and

(D) The torsional shear stress generated by the same lateral forces as described in paragraph (c)(2)(iv)(C) of this section.

(d) In order to account for stresses due to impact in an accident, the design calculations for the cargo tank shell and heads must include the load resulting from the design pressure in combination with the dynamic pressure resulting from a longitudinal deceleration of ''2g''. For this loading condition the stress value used may not exceed the lesser of the yield strength or 75 percent of the ultimate tensile strength of the material of construction. For cargo tanks constructed of stainless steel the maximum design stress may not exceed 75 percent of the ultimate tensile strength of the type steel used.

(e) The minimum metal thickness for the shell and heads must be 0.187 inch for steel and 0.270 inch for aluminum, except for chlorine and sulfur dioxide cargo tanks. For a cargo tank used in chlorine or sulfur dioxide service, the cargo tank must be made of steel. A corrosion allowance of 20 percent or 0.10 inch, whichever is less, must be added to the thickness otherwise required for sulfur dioxide and chlorine tank material. In chlorine cargo tanks the wall thickness must be at least five-eighths inch, including corrosion allowance.

(f) Where a cargo tank support is attached to any part of the cargo tank wall, the stresses imposed on the cargo tank wall must meet the requirements in paragraph (a) of this section.

(g) The design, construction, and installation of an appurtenance to the cargo tank must be such that, in the event of its damage or failure, the lading retention integrity of the cargo tank will not be adversely affected.

(1) A lightweight attachment, such as a conduit clip, brakeline clip or placard holder, must be constructed of a material of lesser strength than the cargo tank wall material and may not be more than 72 percent of the thickness of the material to which it is attached. The attachment may be secured directly to the cargo tank wall if the device is designed and installed in such a manner that, if damaged, it will not affect the lading retention integrity of the cargo tank. The lightweight attachment must be secured to the cargo tank wall by continuous weld or in such a manner as to preclude formation of pockets, which may become sites for incipient corrosion. Attachments meeting the requirements of this paragraph are not authorized for cargo tanks constructed under part UHT of the ASME Code.

(2) Except as prescribed in §178.337–3(g)(1), the welding of any appurtenance of the cargo tank wall must be made by attachment of a mounting pad, so that there will be no adverse effect upon the lading retention integrity of the cargo tank if any force is applied to the appurtenance, from any

direction. The thickness of the mounting pad may not be less than that of the shell or head to which it is attached, and not more than 1.5 times the shell or head thickness. However, a pad with a minimum thickness of 0.250 inch may be used when the shell or head thickness is over 0.250 inch. If weep holes or tell-tale holes are used, the pad must be drilled or punched at its lowest point before it is welded. Each pad must:

(i) Extend at least 2 inches in each direction from any point of attachment of an appurtenance;

(ii) Have rounded corners, or otherwise be shaped in a manner to minimize stress concentrations on the shell or head; and

(iii) Be attached by a continuous weld around the pad, except for a small gap at the lowest point for draining, using filler material conforming to the recommendations of the manufacturer of the head or shell material.

[Amdt. 178–89, 55 FR 37056, Sept. 7, 1990, as amended by Amdt. 178–104, 59 FR 49135, Sept. 26, 1994; Amdt. 178–105, 60 FR 17401, Apr. 5, 1995; Amdt. 178–118, 61 FR 51340, Oct. 1, 1996]

§ 178.337–4 Joints.

(a) Joints shall be as required by the ASME Code, with all undercutting in shell and head material repaired as specified therein.

(b) Welding procedure and welder performance must be in accordance with Section IX of the ASME Code. In addition to the essential variables named therein, the following must be considered as essential variables: Number of passes; thickness of plate; heat input per pass; and manufacturer's identification of rod and flux. When fabrication is done in accordance with part UHT of the ASME Code, filler material containing more than 0.08 percent vanadium must not be used. The number of passes, thickness of plate, and heat input per pass may not vary more than 25 percent from the procedure or welder qualifications. Records of the qualifications must be retained for at least 5 years by the cargo tank manufacturer and must be made available to duly identified representatives of the Department and the owner of the cargo tank.

(c) All longitudinal shell welds shall be located in the upper half of the cargo tank.

(d) Edge preparation of shell and head components may be by machine heat processes, provided such surfaces are remelted in the subsequent welding process. Where there will be no subsequent remelting of the prepared surface as in a tapered section, the final 0.050 inch of material shall be removed by mechanical means.

(e) The maximum tolerance for misalignment and butting up shall be in accordance with the ASME Code.

(f) Substructures shall be properly fitted before attachment, and the welding sequence shall be such as to minimize stresses due to shrinkage of welds.

[Order 59–B, 30 FR 580, Jan. 16, 1965. Redesignated at 32 FR 5606, Apr. 5, 1967]

EDITORIAL NOTE: For FEDERAL REGISTER citations affecting § 178.337–4, see the List of CFR Sections Affected in the Finding Aids section of this volume.

§ 178.337–5 Bulkheads, baffles and ring stiffeners.

(a) Not a specification requirement.

(b) [Reserved]

[Order 59–B, 30 FR 580, Jan. 16, 1965. Redesignated at 32 FR 5606, Apr. 5, 1967]

§ 178.337–6 Closure for manhole.

(a) Each cargo tank marked or certified after April 21, 1994, must be provided with a manhole conforming to paragraph UG–46(g)(1) and other applicable requirements of the ASME Code, except that a cargo tank constructed of NQT steel having a capacity of 3500 water gallons or less may be provided with an inspection opening conforming to paragraph UG–46 and other applicable requirements of the ASME Code instead of a manhole.

(b) The manhole assembly of cargo tanks constructed after June 30, 1979, may not be located on the front head of the cargo tank.

[Amdt. 178–7, 34 FR 18250, Nov. 14, 1969, as amended by Amdt. 178–52, 43 FR 58820, Dec. 18, 1978; Amdt. 178–89, 54 FR 25017, June 12, 1989; 55 FR 21038, May 22, 1990; 56 FR 27876, June 17, 1991; 58 FR 12905, March 8, 1993; Amdt. 178–118, 61 FR 51340, Oct. 1, 1996]

§178.337–7 Overturn protection.

(a) See §178.337–10.

(b) [Reserved]

[Order 59–B, 30 FR 580, Jan. 16, 1965. Redesignated at 32 FR 5606, Apr. 5, 1967]

§178.337–8 Outlets.

(a) *Outlets generally.* (1) An opening shall be provided on each cargo tank used for the transportation of liquefied materials to afford complete drainage.

(2) With the exception of gauging devices, thermometer wells, and pressure relief valves, each opening in a cargo tank intended for use in transporting compressed gas (except carbon dioxide, refrigerated liquid) must be—

(i) Closed with a plug, cap or bolted flange;

(ii) Protected with an excess flow valve on product discharge openings or protected with a check valve on product inlet openings; or

(iii) Fitted with an internal self-closing stop valve as specified in §178.337–11(a).

(b) Outlets on chlorine cargo tanks must meet the requirements in §178.337–1(c)(2).

[Order 59–B, 30 FR 580, Jan. 16, 1965. Redesignated at 32 FR 5606, Apr. 5, 1967]

EDITORIAL NOTE: For FEDERAL REGISTER citations affecting §178.337–8, see the List of CFR Sections Affected in the Finding Aids section of this volume.

§178.337–9 Pressure relief devices, piping, valves, hoses, and fittings.

(a) *Pressure relief devices.* (1) See §173.315(i) of this subchapter.

(2) On cargo tanks for carbon dioxide or nitrous oxide see §173.315 (i) (9) and (10) of this subchapter.

(3) Each valve must be designed, constructed, and marked for a rated pressure not less than the cargo tank design pressure at the temperature expected to be encountered.

(b) *Piping, valves, hose, and fittings.* (1) The burst pressure of all piping, pipe fittings, hose and other pressure parts, except for pump seals and pressure relief devices, must be at least 4 times the design pressure of the cargo tank. Additionally, the burst pressure may not be less than 4 times any higher pressure to which each pipe, pipe fitting, hose or other pressure part may be subjected to in service. For chlorine service, see paragraph (b)(7) of this section.

(2) Pipe joints must be threaded, welded or flanged. If threaded pipe is used, the pipe and fittings must be Schedule 80 weight or heavier. Malleable metals must be used in the construction of valves and fittings. Where copper tubing is permitted, joints shall be brazed or be of equally strong metal union type. The melting point of the brazing material may not be lower than 1000° F. The method of joining tubing must not reduce the strength of the tubing, such as by the cutting of threads.

(3) Each hose coupling must be designed for a pressure of at least 120 percent of the hose design pressure and so that there will be no leakage when connected.

(4) Piping must be protected from damage due to thermal expansion and contraction, jarring, and vibration. Slip joints are not authorized for this purpose.

(5) *Piping and fittings* must be grouped in the smallest practicable space and protected from damage as required by §178.337–10.

(6) All *piping, valves, and fittings* on a cargo tank must be proven free from leaks. This requirement is met when such piping, valves, and fittings have been tested after installation at not less than 80 percent of the design pressure marked on the cargo tank. This requirement is applicable to hoses used in the cargo tank, except that hoses may be tested before or after installation on the cargo tank.

(7) *Chlorine cargo tanks.* Cargo tanks used to transport chlorine must conform to the following:

(i) Angle valves on chlorine cargo tank motor vehicles must conform to the standards of The Chlorine Institute, Inc., as follows:

(A) For a cargo tank manufactured before January 1, 1975, to either Drawing 104–4, dated May 5, 1958, or Drawing 104–5, dated September 1, 1972.

(B) For a cargo tank manufactured on or after January 1, 1975, to Drawing 104–5, dated September 1, 1972.

(ii) Before installation, each angle valve must be tested for leakage at not

less than 225 psig using dry air or inert gas.

(c) *Marking inlets and outlets.* All cargo tank inlets and outlets, except safety relief valves, shall be marked to designate whether they communicate with vapor or liquid when the cargo tank is filled to the maximum permitted filling density.

(d) *Refrigeration and heating coils.* (1) Refrigeration and heating coils must be securely anchored with provisions for thermal expansion. The coils must be pressure tested externally to at least the cargo tank test pressure, and internally to either the tank test pressure or twice the working pressure of the heating/refrigeration system, whichever is higher. A cargo tank may not be placed in service if any leakage occurs or other evidence of damage is found. The refrigerant or heating medium to be circulated through the coils must not be capable of causing any adverse chemical reaction with the cargo tank lading in the event of leakage. The unit furnishing refrigeration may be mounted on the motor vehicle.

(2) Where any liquid susceptible to freezing, or the vapor of any such liquid, is used for heating or refrigeration, the heating or refrigeration system shall be arranged to permit complete drainage.

[Order 59–B, 30 FR 580, Jan. 16, 1965. Redesignated at 32 FR 5606, Apr. 5, 1967]

EDITORIAL NOTE: For FEDERAL REGISTER citations affecting §178.337–9, see the List of CFR Sections Affected in the Finding Aids section of this volume.

178.337–10 Protection of fittings.

(a) All valves, fittings, safety relief devices, and other accessories to the tank proper shall be protected in accordance with paragraph (b) of this section against such damage as could be caused by collision with other vehicles or objects, jackknifing and overturning. In addition, safety relief valves shall be so protected that in the event of overturn of the vehicle on to a hard surface, their opening will not be prevented and their discharge will not be restricted.

(b) The protective devices or housing must be designed to withstand static loading in any direction equal to twice the weight of the tank and attachments when filled with the lading, using a safety factor of not less than four, based on the ultimate strength of the material to be used, without damage to the fittings protected, and must be made of metal at least 3⁄16-inch thick.

(c) *For chlorine tanks.* There shall be a protective housing and manway cover to permit the use of standard emergency kits for controlling leaks in fittings on the dome cover plate. The housing and manway cover must conform to the Chlorine Institute's standards as follows:

(1) Tanks manufactured on or before December 31, 1974: Dwg. 137–1, dated November 7, 1962, or Dwg. 137–2, dated September 1, 1971.

(2) Tanks manufactured on or after January 1, 1975: Dwg. 137–2, dated September 1, 1971.

(d) Each cargo tank shall be provided with at least one rear bumper designed to protect the tank and piping in the event of a rear end collision and minimize the possibility of any part of the colliding vehicle striking the tank. The design shall be such as to transmit the force of a rear end collision in a horizontal line to the chassis of the vehicle. The bumper shall be designed to withstand the impact of the fully loaded vehicle with a deceleration of 2 ''g'', using a safety factor of four based on the ultimate strength of the bumper material. The bumpers shall conform dimensionally to §393.86, chapter III of this title.

[Order 59–B, 30 FR 581, Jan. 16, 1965. Redesignated at 32 FR 5606, Apr. 5, 1967]

EDITORIAL NOTE: For FEDERAL REGISTER citations affecting §178.337–10, see the List of CFR Sections Affected in the Finding Aids section of this volume.

§178.337–11 Emergency discharge control.

(a) *Excess flow valves, back flow check valves and stop valves.* (1) When required by §178.337–8(a)(2):

(i) Each internal self-closing stop valve and excess flow valve must automatically close if any of its attachments are sheared off or if any attached hoses or piping are separated.

(ii) Each self-closing stop valve, excess flow valve, or check valve must be located inside the cargo tank or inside

a welded nozzle which is an integral part of the cargo tank. The valve seat must be located inside the cargo tank or within a welded flange, its companion flange, a nozzle or coupling. The installation must be made so as to assure that any undue strain which causes a failure requiring the functioning of the valve will not impair the operation of the valve.

(iii) All parts of the valve inside the cargo tank, or within a nozzle, flange, companion flange, or coupling must be made of material not subject to corrosion or other deterioration in the presence of the lading.

(iv) Any liquid level gauging device must be constructed so that the outward flow of the cargo tank lading does not exceed the flow through a 0.060-inch diameter opening.

(v) Each excess flow valve must close automatically at the rated flow of gas or liquid as specified by the valve manufacturer. The flow rating of the piping, fittings, valves, and hoses on each side of the excess flow valve must be at least equal to that of the excess flow valve. If branching or other restrictions are incorporated in the system so that the flow rating is reduced to less than that of the excess flow valve at the cargo tank, additional excess flow valves must be located where the flow rates are reduced. The additional valves must have sufficient flow rating so that total capacity equals or exceeds the excess flow valve capacity.

(vi) An excess flow valve may be designed with a bypass, not to exceed a 0.040-inch diameter opening, to allow equalization of pressures.

(2) Except for a cargo tank marked ''For carbon dioxide only'', each liquid or vapor discharge opening in a cargo tank must be equipped with a remotely controlled internal self-closing stop valve. This requirement does not apply to a cargo tank motor vehicle certified before January 1, 1995, unless intended for use to transport a flammable liquid, flammable gas, hydrogen chloride, refrigerated liquid, or anhydrous ammonia. For cargo tanks intended for use in chlorine service, see paragraph (a)(4) of this section.

(i) On a cargo tank over 3,500 gallons water capacity, each internal self-closing stop-valve must be provided with remote means of automatic closure, both mechanical and thermal, that are installed at the ends of the cargo tank in at least two, diagonally opposite locations. Cable linkage between closures and remote operators must be corrosion resistant and effective in all types of environment and weather. If the loading/unloading connection at the cargo tank is not in the general vicinity of one of the two locations specified above, one additional fusible element must be installed so that heat from a fire in the loading/unloading connection area will activate the emergency control system. Fusible elements must not have a melting point exceeding 250° F. The loading/unloading connection area is where hoses or hose reels are connected to the permanent metal piping.

(ii) On a cargo tank of 3,500 gallons water capacity or less, each internal self-closing stop-valve must be provided with at least one remote means of automatic closure, which may be mechanical, installed on the end of the cargo tank furthest away from the loading/unloading connection area. The loading/unloading connection area is where hoses or hose reels are connected to the permanent metal piping.

(3) Unless otherwise specified in paragraph (c) of this section, each outlet of a cargo tank intended for the transportation of a nonflammable gas (except carbon dioxide, refrigerated liquid) must be provided with an internal self-closing stop-valve or an automatic excess flow valve.

(4) Excess flow valves on chlorine cargo tank motor vehicles must conform to the standards of The Chlorine Institute, Inc., as follows:

(i) For a cargo tank manufactured before January 1, 1975:

(A) A valve conforming to either Drawing 101–4, dated May 16, 1969, or Drawing 101–6, dated September 1, 1973, must be installed under each liquid angle valve.

(B) A valve conforming to either Drawing 106–3, dated May 16, 1969, or Drawing 106–5, dated September 1, 1973, must be installed under each gas angle valve.

(ii) For a cargo tank manufactured on or after January 1, 1975:

(A) A valve conforming to Drawing 101–6, dated September 1, 1973, must be installed under each liquid angle valve.

(B) A valve conforming to Drawing 106–5, dated September 1, 1973, must be installed under each gas angle valve.

(b) *Shut-off valves.* Each filling and discharge line must be provided with a manual stop-valve located as close to the cargo tank as practicable. However, if an internal self-closing stop-valve is used, the manual stop valve must be located in the line between the self-closing stop-valve and the hose connection. A single so-called ''stop-check'' or excess flow valve may not be used to satisfy the requirements of this paragraph, except as provided in paragraph (c) of this section.

(c) The requirements in paragraph (a) of this section, do not apply to:

(1) A vapor or liquid discharge opening of less than 1¼ inch NPT equipped with an excess flow valve together with a manually operated external stop valve, in place of a remotely controlled internal self-closing stop-valve.

(2) A vapor or liquid discharge opening of 1¼ inch NPT equipped with an excess flow valve together with a manually operated external stop valve installed before October 1, 1984.

(3) An engine fuel line, on a truck-mounted cargo tank, of not over ¾ inch NPT equipped with a valve having an integral excess flow valve.

[Amdt. 178–89, 54 FR 25017, June 12, 1989, as amended at 55 FR 37057, Sept. 7, 1990; Amdt. 178–97, 57 FR 45465, Oct. 1, 1992; Amdt. 178–104, 59 FR 49135, Sept. 26, 1994; Amdt. 178–105, 59 FR 55173, Nov. 3, 1994; Amdt. 178–118, 61 FR 51340, Oct. 1, 1996]

§ 178.337–12 Shear section.

(a) Design or installation of valves specified in § 178.337–8(a)(2) shall provide adjacent to and outboard of such valves a section which will break under undue strain.

(b) [Reserved]

[Order 59–B, 30 FR 581, Jan. 16, 1965. Redesignated at 32 FR 5606, Apr. 5, 1967]

§ 178.337–13 Supporting and anchoring.

(a) A cargo tank that is not permanently attached to or integral with a vehicle chassis must be secured by turnbuckles or equally efficient securing devices for drawing the cargo tank down tight on the frame. Anchors, stops, or other means must be provided to prevent relative motion between the cargo tank and the vehicle chassis when the vehicle is in operation.

(b) A cargo tank motor vehicle designed and constructed so that the cargo tank constitutes in whole or in part the stress member used in place of a frame must have the cargo tank supported by external cradles. A cargo tank mounted on a frame must be supported by external cradles or longitudinal members. The cradles, where used, must subtend at least 120 degrees of the shell circumference. The design calculations for the supports must include beam stress, shear stress, torsion stress, bending moment, and acceleration stress, for the loaded cargo tank motor vehicle as a unit, using a factor of safety of 4, based on the ultimate strength of the material and on a 2 ''g'' longitudinal and lateral loading and 3 times the static weight in vertical loading (see appendix G of the ASME Code).

(c) Where any cargo tank support is attached to any part of a cargo tank head, the stresses imposed upon the head shall be provided for as required in paragraph (b) of this section.

(d) No cargo tank support or bumper may be welded directly to the cargo tank. All supports and bumpers shall be attached by means of pads of the same material as the cargo tank. The pad thickness shall be no less than ¼ inch, or the thickness of the shell material if less, and no greater than the shell material. Each pad shall extend at least 4 times its thickness, in each direction, beyond the weld attaching the support or bumper. Each pad shall be preformed to an inside radius no greater than the outside radius of the cargo tank at the place of attachment. Each pad corner shall be rounded to a radius at least one-fourth the width of the pad, and no greater than one-half the width of the pad. Weep holes and telltale holes, if used shall be drilled or punched before the pads are attached to the cargo tank. Each pad shall be attached to the cargo tank by continuous

fillet welding using filler material having properties conforming to the recommendations of the maker of the shell and head material.

[Order 59–B, 30 FR 581, Jan. 16, 1965. Redesignated at 32 FR 5606, Apr. 5, 1967, and amended by Amdt. 178–29, 38 FR 27598, Oct. 5, 1973; Amdt. 178–85, 51 FR 5977, Feb. 18, 1986; Amdt. 178–88, 52 FR 13046, Apr. 20, 1987; Amdt. 178–118, 61 FR 51340, Oct. 1, 1996]

§178.337–14 Gauging devices.

(a) *Liquid level gauging devices.* See §173.315(h) of this subchapter.

(b) *Pressure gauges.* (1) See §173.315(h) of this subchapter.

(2) Each cargo tank used in carbon dioxide, refrigerated liquid or nitrous oxide, refrigerated liquid service must be provided with a suitable pressure gauge. A shut-off valve must be installed between the pressure gauge and the cargo tank.

(c) *Orifices.* See §173.315(h) (3) and (4) of this subchapter.

[Amdt. 178–29, 38 FR 27599, Oct. 5, 1973, as amended by Amdt. 178–89, 54 FR 25018, June 12, 1989; Amdt. 178–118, 61 FR 51340, Oct. 1, 1996]

§178.337–15 Pumps and compressors.

(a) Liquid pumps or gas compressors, if used, must be of suitable design, adequately protected against breakage by collision, and kept in good condition. They may be driven by motor vehicle power take-off or other mechanical, electrical, or hydraulic means. Unless they are of the centrifugal type, they shall be equipped with suitable pressure actuated by-pass valves permitting flow from discharge to suction or to the cargo tank.

(b) A liquid chlorine pump may not be installed on a cargo tank intended for the transportation of chlorine.

[Amdt. 178–89, 54 FR 25018, June 12, 1989, as amended by Amdt. 178–118, 61 FR 51340, Oct. 1, 1996]

§178.337–16 Testing.

(a) *Inspection and tests.* Inspection of materials of construction of the cargo tank and its appurtenances and original test and inspection of the finished cargo tank and its appurtenances must be as required by the ASME Code and as further required by this specification except that for cargo tanks constructed in accordance with part UHT of the ASME Code the original test pressure must be at least twice the cargo tank design pressure.

(b) *Weld testing and inspection.* (1) Each cargo tank constructed in accordance with part UHT of the ASME Code must be subjected, after postweld heat treatment and hydrostatic tests, to a wet fluorescent magnetic particle inspection to be made on all welds in or on the cargo tank shell and heads both inside and out. The method of inspection must conform to Appendix VI of the ASME Code, paragraph UA–70 through UA–72 except that permanent magnets shall not be used.

(2) On cargo tanks of over 3,500 gallons water capacity other than those described in paragraph (b)(1) of this section unless fully radiographed, a test must be made of all welds in or on the shell and heads both inside and outside by either the wet fluorescent magnetic particle method conforming to appendix VI of the ASME Code, liquid dye penetrant method, or ultrasonic testing in accordance with appendix U of the ASME Code. Permanent magnets must not be used to perform the magnetic particle inspection.

(c) All defects found shall be repaired, the cargo tanks shall then again be postweld heat treated, if such heat treatment was previously performed, and the repaired areas shall again be tested.

[Order 59–B, 30 FR 582, Jan. 16, 1965. Redesignated at 32 FR 5606, Apr. 5, 1967, and amended by Amdt. 178–7, 34 FR 18250, Nov. 14, 1969; Amdt. 178–99, 58 FR 51534, Oct. 1, 1993; Amdt. 178–118, 61 FR 51340, Oct. 1, 1996]

§178.337–17 Marking.

(a) *Metal identification plate.* Each cargo tank built after July 1, 1985 shall have a corrosion resistant metal plate permanently affixed by brazing or welding around its perimeter, on the left side (on the right side prior to July 1, 1985) near the front, in a place readily accessible for inspection. It must be maintained in a legible condition. On multi–cargo tank motor vehicles plates shall be attached to each cargo tank at the front in a place readily accessible for inspection. Each insulated cargo tank shall have an additional plate, as described, affixed to the jacket in the

location specified. Neither the plate itself nor the means of attachment to the cargo tank or jacket may be subject to attack by the cargo tank contents. If the plate is attached directly to the cargo tank by welding it shall be welded thereto before the cargo tank is postweld heat treated. The plate shall be plainly marked by stamping, embossing, or other means of forming letters into the metal of the plate, with the following information in addition to that required by the ASME Code, in characters at least ⅜ inch high:

Vehicle manufacturer.
Vehicle manufacturer's serial number.
D.O.T. specification number MC–331.
Vessel material specification number.
Water capacity in pounds (see Note 1).
Original test date.

NOTE 1: See § 173.315(a) of this chapter regarding water capacity.

(b) Each cargo tank must also be marked as required by § 172.328 of this subchapter.

[Order 59–B, 30 FR 582, Jan. 16, 1965. Redesignated at 32 FR 5606, Apr. 5, 1967]

EDITORIAL NOTE: For FEDERAL REGISTER citations affecting § 178.337–17, see the List of CFR Sections Affected in the Finding Aids section of this volume.

§ 178.337–18 Certification.

(a) At or before the time of delivery, the cargo tank motor vehicle manufacturer must supply and the owner must obtain, a cargo tank motor vehicle manufacturer's data report as required by the ASME Code, and a certificate stating that the completed cargo tank motor vehicle conforms in all respects to Specification MC 331 and the ASME Code. The registration numbers of the manufacturer, the Design Certifying Engineer, and the Registered Inspector, as appropriate, must appear on the certificates (see subpart F, part 107 in subchapter A of this chapter).

(1) For each design type, the certificate must be signed by a responsible official of the manufacturer and a Design Certifying Engineer; and

(2) For each cargo tank motor vehicle, the certificate must be signed by a responsible official of the manufacturer and a Registered Inspector.

(3) The certificate must state whether or not it includes certification that all valves, piping, and protective devices conform to the requirements of the specification. If it does not so certify, the installer of any such valve, piping, or device shall supply and the owner shall obtain a certificate asserting complete compliance with these specifications for such devices. The certificate, or certificates, will include sufficient sketches, drawings, and other information to indicate the location, make, model, and size of each valve and the arrangement of all piping associated with the cargo tank.

(4) The certificate must contain a statement indicating whether or not the cargo tank was postweld heat treated for anhydrous ammonia as specified in § 178.337–1(f).

(b) The owner shall retain the copy of the data report and certificates and related papers in his files throughout his ownership of the cargo tank motor vehicle and for at least one year thereafter; and in the event of change in ownership, retention by the prior owner of nonfading photographically reproduced copies will be deemed to satisfy this requirement. Each motor carrier using the cargo tank motor vehicle, if not the owner thereof, shall obtain a copy of the data report and certificate and retain them in his files during the time he uses the cargo tank motor vehicle and for at least one year thereafter.

[Order 59–B, 30 FR 583, Jan. 16, 1965. Redesignated at 32 FR 5606, Apr. 5, 1967]

EDITORIAL NOTE: For FEDERAL REGISTER citations affecting § 178.337–18, see the List of CFR Sections Affected in the Finding Aids section of this volume.

§ 178.338 Specification MC–338; insulated cargo tank.

§ 178.338–1 General requirements.

(a) For the purposes of this section—

(1) *Design pressure* means the ''maximum allowable working pressure'' as used in the ASME Code, and is the gauge pressure at the top of the tank.

(2) *Design service temperature* means the coldest temperature for which the tank is suitable (see §§ 173.318 (a)(1) and (f) of this subchapter).

(b) Each cargo tank must consist of a suitably supported welded inner vessel

enclosed within an outer shell or jacket, with insulation between the inner vessel and outer shell or jacket, and having piping, valves, supports and other appurtenances as specified in this subchapter. For the purpose of this specification, *tank* means inner vessel and *jacket* means either the outer shell or insulation cover.

(c) Each tank must be designed and constructed to meet the requirements of the ASME Code.

(1) The design pressure of the tank must be at least 25.3 psig but not more than 500 psig. To determine the required thicknesses of the parts of the tank, the static head of the lading shall be added to the design pressure. If the jacket is evacuated, the tank must be designed for a pressure of 14.7 psi, plus the lading static head, higher than its design pressure. The jacket must be designed in accordance with paragraph (e) or (f) of this section, as appropriate.

(2) The design service temperature of the tank, piping and valves may not be warmer than the liquefaction temperature at one atmosphere of the lading to be transported (see §§173.318 (a)(1) and (f) of this subchapter).

(3) Design and construction details of the tank interior may not allow collection and retention of cleaning materials or contaminants. To preclude the entrapment of foreign material, the design and construction of the tank must allow washing of all interior surfaces by the normal surging of the lading during transportation.

(d) The exterior surface of the tank must be insulated with a material compatible with the lading.

(1) Each cargo tank must have an insulation system that will prevent the tank pressure from exceeding the pressure relief valve set pressure within the specified holding time when the tank is loaded with the specific cryogenic liquid at the design conditions of—

(i) The specified temperature and pressure of the cryogenic liquid, and

(ii) The exposure of the filled cargo tank to an average ambient temperature of 85° F.

(2) For a cargo tank used to transport oxygen, the insulation may not sustain combustion in a 99.5 percent oxygen atmosphere at atmospheric pressure when contacted with a continuously heated glowing platinum wire. The cargo tank must be marked in accordance with §178.338–18(b)(7).

(3) Each vacuum-insulated cargo tank must be provided with a connection for a vacuum gauge to indicate the absolute pressure within the insulation space.

(e) The insulation must be completely covered by a metal jacket. The jacket or the insulation must be so constructed and sealed as to prevent moisture from coming into contact with the insulation (see §173.318(a)(3) of this subchapter). Minimum metal thicknesses are as follows:

Type metal	Jacket evacuated		Jacket not evacuated	
	Gauge	Inches	Gauge	Inches
Stainless steel	18	0.0428	22	0.0269
Low carbon mild steel	12	0.0946	14	0.0677
Aluminum	.....	0.125	.....	0.1000

(f) An evacuated jacket must be in compliance with the following requirements:

(1) The jacket must be designed to sustain a minimum critical collapsing pressure of 30 psi.

(2) If the jacket also supports additional loads, such as the weight of the tank and lading, the combined stress, computed according to the formula in §178.338–3(b), may not exceed 25 percent of the minimum specified tensile strength.

[Amdt. 178–77, 48 FR 27703, June 16, 1983, as amended at 49 FR 24316, June 12, 1984; Amdt. 178–104, 59 FR 49135, Sept. 26, 1994]

§178.338–2 Material.

(a) All material used in the construction of a tank and its appurtenances that may come in contact with the lading must be compatible with the lading to be transported. All material used for tank pressure parts must conform to the requirements of the ASME Code. All material used for evacuated jacket pressure parts must conform to the chemistry and steelmaking practices of one of the material specifications of Section II of the ASME Code or the following ASTM Specifications: A 242, A 441, A 514, A 572, A 588, A 606, A 607, A 633, A 715.

(b) All tie-rods, mountings, and other appurtenances within the jacket and

all piping, fittings and valves must be of material suitable for use at the lowest temperature to be encountered.

(c) Impact tests are required on all tank materials, except aluminum, and must be performed using the procedure prescribed in the ASME Code.

(d) The direction of final rolling of the shell material must be the circumferential orientation of the tank shell.

(e) Each tank constructed in accordance with part UHT of the ASME Code must be postweld heat treated as a unit after completion of all welds to the shell and heads. Other tanks must be postweld heat treated as required by the ASME Code. For all tanks the method must be as prescribed in the ASME Code. Welded attachments to pads may be made after postweld heat treatment.

(f) The fabricator shall record the heat and slab numbers and the certified Charpy impact values of each plate used in the tank on a sketch showing the location of each plate in the shell and heads of the tank. A copy of the sketch must be provided to the owner of the cargo tank and a copy must be retained by the fabricator for at least five years and made available, upon request, to any duly identified representative of the Department.

(Approved by the Office of Management and Budget under control number 2137–0017)

[Amdt. 178–77, 48 FR 27703 and 27713, June 16, 1983, as amended at 49 FR 24316, June 12, 1984]

§ 178.338–3 Structural integrity.

(a) *General requirements and acceptance criteria.* (1) Except as permitted in paragraph (d) of this section, the maximum calculated design stress at any point in the tank may not exceed the lesser of the maximum allowable stress value prescribed in section VIII of the ASME Code, or 25 percent of the tensile strength of the material used.

(2) The relevant physical properties of the materials used in each tank may be established either by a certified test report from the material manufacturer or by testing in conformance with a recognized national standard. In either case, the ultimate tensile strength of the material used in the design may not exceed 120 percent of the minimum ultimate tensile strength specified in either the ASME Code or the ASTM standard to which the material is manufactured.

(3) The maximum design stress at any point in the tank must be calculated separately for the loading conditions described in paragraphs (b), (c), and (d) of this section. Alternate test or analytical methods, or a combination thereof, may be used in lieu of the procedures described in paragraphs (b), (c), and (d) of this section, if the methods are accurate and verifiable.

(4) Corrosion allowance material may not be included to satisfy any of the design calculation requirements of this section.

(b) The static design and construction of each tank must be in accordance with section VIII of the ASME Code. The tank design must include calculation of stresses due to design pressure, the weight of lading, the weight of structures supported by the tank wall, and the effect of temperature gradients resulting from lading and ambient temperature extremes. When dissimilar materials are used, their thermal coefficients must be used in calculation of the thermal stresses. Stress concentrations in tension, bending and torsion which occur at pads, cradles, or other supports must be considered in accordance with appendix G of the ASME Code.

(c) Stresses resulting from static and dynamic loadings, or a combination thereof, are not uniform throughout the cargo tank motor vehicle. The following is a simplified procedure for calculating the effective stress in the tank resulting from static and dynamic loadings. The effective stress (the maximum principal stress at any point) must be determined by the following formula:

$$S=0.5\ (S_y+S_x)\pm(0.25(S_y-S_x)^2+S_s2)^{0.5}$$

Where:

(1) S= effective stress at any given point under the most severe combination of static and dynamic loadings that can occur at the same time, in psi.

(2) S_y=circumferential stress generated by internal and external pressure when applicable, in psi.

(3) S_x=the net longitudinal stress, in psi, generated by the following loading conditions:

(i) The longitudinal tensile stress generated by internal pressure;

(ii) The tensile or compressive stress generated by the axial load resulting from a decelerative force applied independently to each suspension assembly at the road surface using applicable static loadings specified in § 178.338–13 (b) and (c);

(iii) The tensile or compressive stress generated by the bending moment resulting from a decelerative force applied independently to each suspension assembly at the road surface using applicable static loadings specified in § 178.338–13 (b) and (c);

(iv) The tensile or compressive stress generated by the axial load resulting from an accelerative force applied to the horizontal pivot of the fifth wheel supporting the vehicle using applicable static loadings specified in § 178.338–13 (b) and (c);

(v) The tensile or compressive stress generated by the bending moment resulting from an accelerative force applied to the horizontal pivot of the fifth wheel supporting the vehicle using applicable static loadings specified in § 178.338–13 (b) and (c); and

(vi) The tensile or compressive stress generated by a bending moment produced by a vertical force using applicable static loadings specified in § 178.338–13 (b) and (c).

(4) S_s=The following shear stresses that apply, in psi,: The vectorial sum of the applicable shear stresses in the plane under consideration, including direct shear generated by the static vertical loading; direct lateral and torsional shear generated by a lateral accelerative force applied at the road surface, using applicable static loads specified in § 178.338–13 (b) and (c)

(d) In order to account for stresses due to impact in an accident, the design calculations for the tank shell and heads must include the load resulting from the design pressure in combination with the dynamic pressure resulting from a longitudinal deceleration of ''2g''. For this loading condition the stress value used may not exceed the lesser of the yield strength or 75 percent of the ultimate tensile strength of the material of construction. For a cargo tank constructed of stainless steel, the maximum design stress may not exceed 75 percent of the ultimate tensile strength of the type steel used.

(e) The minimum thickness of the shell or heads of the tank must be 0.187 inch for steel and 0.270 inch for aluminum. However, the minimum thickness for steel may be 0.110 inches provided the cargo tank is:

(1) Vacuum insulated, or

(2) Double walled with a load bearing jacket designed to carry a proportionate amount of structural loads prescribed in this section.

(f) Where a tank support is attached to any part of the tank wall, the stresses imposed on the tank wall must meet the requirements in paragraph (a) of this section.

(g) The design, construction, and installation of an appurtenance to the cargo tank or jacket must be such that, in the event of its damage or failure, the lading retention integrity of the tank will not be adversely affected.

(1) A lightweight attachment, such as a conduit clip, brakeline clip or placard holder, must be constructed of a material of lesser strength than the cargo tank wall or jacket material and may not be more than 72 percent of the thickness of the material to which it is attached. The attachment may be secured directly to the cargo tank wall or jacket if the device is designed and installed in such a manner that, if damaged, it will not affect the lading retention integrity of the tank. The lightweight attachment must be secured to the cargo tank wall or jacket by continuous weld or in such a manner as to preclude formation of pockets, which may become sites for incipient corrosion. Attachments conforming with this paragraph are not authorized for cargo tanks constructed under part UHT of the ASME Code.

(2) Except as prescribed in § 178.338-3(g)(1), the welding of any appurtenance to the cargo tank wall or jacket must be made by attachment of a mounting pad, so that there will be no adverse affect upon the lading retention integrity of the tank if any force is applied to the appurtenance, from any direction. The thickness of the mounting pad may not be less than that of the shell or head to which it is attached, and not more than 1.5 times the shell or head thickness. However, a pad with a minimum thickness of 0.187 inch may be used when the shell or head thickness is over 0.187 inch. If weep holes or tell tale holes are used, the pad must be drilled or punched at its lowest point before it is welded. Each pad must—

(i) Extend at least 2 inches in each direction from any point of attachment of an appurtenance;

(ii) Be attached by a continuous weld around the pad except for a small gap at the lowest point for draining.

[Amdt. 178–89, 55 FR 37057, Sept. 7, 1990, as amended by Amdt. 178–89, 56 FR 27876, June 17, 1991; 56 FR 46354, Sept. 11, 1991]

§ 178.338–4 Joints.

(a) All joints in the tank, and in the jacket if evacuated, must be as prescribed in the ASME Code, except that a butt weld with one plate edge offset is not authorized.

(b) Welding procedure and welder performance tests must be made in accordance with Section IX of the ASME Code. Records of the qualification must be retained by the tank manufacturer for at least five years and must be made available, upon request, to any duly identified representative of the Department, or the owner of the cargo tank.

(c) All longitudinal welds in tanks and load bearing jackets must be located so as not to intersect nozzles or supports other than load rings and stiffening rings.

(d) Substructures must be properly fitted before attachment and the welding sequence must minimize stresses due to shrinkage of welds.

(e) Filler material containing more than 0.05 percent vanadium may not be used with quenched and tempered steel.

(f) All tank nozzle-to-shell and nozzle-to-head welds must be full penetration welds.

(Approved by the Office of Management and Budget under control number 2137–0017)

[Amdt. 178–77, 48 FR 27704 and 27713, June 16, 1983, as amended at 49 FR 24316, June 12, 1984]

§ 178.338–5 Stiffening rings.

(a) A tank is not required to be provided with stiffening rings, except as prescribed in the ASME Code.

(b) If a jacket is evacuated, it must be constructed in compliance with § 178.338–1(f). Stiffening rings may be used to meet these requirements.

[Amdt. 178–77, 48 FR 27704, June 16, 1983]

§ 178.338–6 Manholes.

(a) Each tank in oxygen service must be provided with a manhole as prescribed in the ASME Code.

(b) Each tank having a manhole must be provided with a means of entrance and exit through the jacket, or the jacket must be marked to indicate the manway location on the tank.

(c) A manhole with a bolted closure may not be located on the front head of the tank.

[Amdt. 178–77, 48 FR 27704, June 16, 1983, as amended at 49 FR 24316, June 12, 1984]

§ 178.338–7 Openings.

(a) The inlet to the liquid product discharge opening of each tank intended for flammable ladings must be at the bottom centerline of the tank.

(b) If the leakage of a single valve, except a pressure relief valve, pressure control valve, full trycock or gas phase manual vent valve, would permit loss of flammable material, an additional closure that is leak tight at the tank design pressure must be provided outboard of such valve.

[Amdt. 178–77, 48 FR 27704, June 16, 1983]

§ 178.338–8 Pressure relief devices, piping, valves, and fittings.

(a) *Pressure relief devices.* Each tank pressure relief device must be designed, constructed, and marked in accordance with § 173.318(b) of this subchapter.

(b) *Piping, valves, and fittings.* (1) The burst pressure of all piping, pipe fittings, hoses and other pressure parts, except for pump seals and pressure relief devices, must be at least 4 times the design pressure of the tank. Additionally, the burst pressure may not be less than 4 times any higher pressure to which each pipe, pipe fitting, hose or other pressure part may be subjected to in service.

(2) Pipe joints must be threaded, welded or flanged. If threaded pipe is used, the pipe and fittings must be Schedule 80 weight or heavier. Malleable metals must be used in the construction of valves and fittings. Where copper tubing is permitted, joints shall be brazed or be of equally strong metal union type. The melting point of the brazing materials may not be lower than 1000 °F. The method of joining tubing may not reduce the strength of the tubing, such as by the cutting of threads.

(3) Each hose coupling must be designed for a pressure of at least 120 percent of the hose design pressure and so that there will be no leakage when connected.

(4) Piping must be protected from damage due to thermal expansion and contraction, jarring, and vibration. Slip joints are not authorized for this purpose.

(5) All piping, valves and fittings on a cargo tank must be proved free from leaks. This requirement is met when such piping, valves, and fittings have been tested after installation with gas or air and proved leak tight at not less than the design pressure marked on the cargo tank. This requirement is applicable to all hoses used in a cargo tank, except that hose may be tested before or after installation on the tank.

(6) Each valve must be suitable for the tank design pressure at the tank design service temperature.

(7) All fittings must be rated for the maximum tank pressure and suitable for the coldest temperature to which they will be subjected in actual service.

(8) All piping, valves, and fittings must be grouped in the smallest practicable space and protected from damage as required by §178.338–10.

(9) When a pressure-building coil is used on a tank designed to handle oxygen or flammable ladings, the vapor connection to that coil must be provided with a valve or check valve as close to the tank shell as practicable to prevent the loss of vapor from the tank in case of damage to the coil. The liquid connection to that coil must also be provided with a valve.

[Amdt. 178–77, 48 FR 27704, June 16, 1983, as amended by Amdt. 178–89, 54 FR 25019, June 12, 1989]

§178.338–9 Holding time.

(a) ''Holding time'' is the time, as determined by testing, that will elapse from loading until the pressure of the contents, under equilibrium conditions, reaches the level of the lowest pressure control valve or pressure relief valve setting.

(b) *Holding time test.* (1) The test to determine holding time must be performed by charging the tank with a cryogenic liquid having a boiling point, at a pressure of one atmosphere, absolute, no lower than the design service temperature of the tank. The tank must be charged to its maximum permitted filling density with that liquid and stabilized to the lowest practical pressure, which must be equal to or less than the pressure to be used for loading. The cargo tank together with its contents must then be exposed to ambient temperature.

(2) The tank pressure and ambient temperature must be recorded at 3-hour intervals until the pressure level of the contents reaches the set-to-discharge pressure of the pressure control valve or pressure relief valve with the lowest setting. This total time lapse in hours represents the measured holding time at the actual average ambient temperature. This measured holding time for the test cryogenic liquid must be adjusted to an equivalent holding time for each cryogenic liquid that is to be identified on or adjacent to the specification plate, at an average ambient temperature of 85°F. This is the rated holding time (RHT). The marked rated holding time (MRHT) displayed on or adjacent to the specification plate (see §178.338–18(b)(9)) may not exceed this RHT.

(c) *Optional test regimen.* (1) If more than one cargo tank is made to the same design, only one cargo tank must be subjected to the full holding time test at the time of manufacture. However, each subsequent cargo tank made to the same design must be performance tested during its first trip. The holding time determined in this test may not be less than 90 percent of the marked rated holding time. This test must be performed in accordance with §§173.318(g)(3) and 177.840(h) of this subchapter, regardless of the classification of the cryogenic liquid.

(2) *Same design.* The term ''same design'' as used in this section means cargo tanks made to the same design type. See §178.320(a)(3) for definition of ''design type''.

(3) For a cargo tank used in nonflammable cryogenic liquid service, in place of the holding time tests prescribed in paragraph (b) of this section, the marked rated holding time (MRHT) may be determined as follows:

(i) While the cargo tank is stationary, the heat transfer rate must be determined by measuring the normal evaporation rate (NER) of the test cryogenic liquid (preferably the lading, where feasible) maintained at approximately one atmosphere. The calculated heat transfer rate must be determined from:

$$q=[n(\Delta h)(85-t_1)]/[t_s-t_f]$$

Where:

q=calculated heat transfer rate to cargo tank with lading, Btu/hr.

n=normal evaporation rate (NER), which is the rate of evaporation, determined by the test of a test cryogenic liquid in a cargo tank maintained at a pressure of approximately one atmosphere, absolute, lb/hr.

Δ h=latent heat of vaporization of test fluid at test pressure, Btu/lb.

t_s=average temperature of outer shell during test, ° F.

t_1=equilibrium temperature of lading at maximum loading pressure, ° F.

t_f=equilibrium temperature of test fluid at one atmosphere, ° F.

(ii) The rated holding time (RHT) must be calculated as follows:

$$RHT=[(U_2-U_1)\ W]/q$$

Where:

RHT=rated holding time, in hours

U_1 and U_2=internal energy for the combined liquid and vapor lading at the pressure offered for transportation, and the set pressure of the applicable pressure control valve or pressure relief valve, respectively, Btu/lb.

W=total weight of the combined liquid and vapor lading in the cargo tank, pounds.

q=calculated heat transfer rate to cargo tank with lading, Btu/hr.

(iii) The MRHT (see § 178.338–18(b)(9) of this subchapter) may not exceed the RHT.

[Amdt. 178–77, 48 FR 27704, June 16, 1983; 48 FR 50442, Nov. 1, 1983, as amended at 49 FR 24316, June 12, 1984; 49 FR 43965, Nov. 1, 1984; 59 FR 55173, Nov. 3, 1994; Amdt. 178–118, 61 FR 51340, Oct. 1, 1996]

§ 178.338–10 Collision damage protection.

(a) All valves, fittings, pressure relief devices and other accessories to the tank proper, which are not isolated from the tank by closed intervening shut-off valves or check valves, must be installed within the motor vehicle framework or within a suitable collision resistant guard or housing, and appropriate ventilation must be provided. Each pressure relief device must be protected so that in the event of the upset of the vehicle onto a hard surface, the device's opening will not be prevented and its discharge will not be restricted.

(b) Each protective device or housing, and its attachment to the vehicle structure, must be designed to withstand static loading in any direction that it may be loaded as a result of front, rear, side, or sideswipe collision, or the overturn of the vehicle. The static loading shall equal twice the loaded weight of the tank and attachments. A safety factor of four, based on the tensile strength of the material, shall be used. The protective device or the housing must be made of steel at least 3/16-inch thick, or other material of equivalent strength.

(c) Each tank motor vehicle must be provided with at least one rear bumper designed to protect the cargo tank and piping in the event of a rear end collision. The bumper design must transmit the force of the collision directly to the chasis of the vehicle. The rear bumper and its attachments to the chasis must be designed to withstand a load equal to twice the weight of the loaded cargo tank and attachments, using a safety factor of four based on the tensile strength of the materials used, with such load being applied horizontally and parallel to the major axis of the cargo tank, or within 30 horizontal degrees thereof. The rear bumper dimensions must meet the requirements of §393.86 of this title and extend vertically to a height adequate to protect all valves and fittings located at the rear of the cargo tank from damage that could result in loss of lading.

(d) Every part of the loaded cargo tank, and any associated valve, pipe, enclosure, or protective device or structure (exclusive of wheel assemblies), must be at least 14 inches above level ground.

[Amdt. 178–77, 48 FR 27705, June 16, 1983, as amended at 49 FR 24316, June 12, 1984; Amdt. 178–99, 58 FR 51534, Oct. 1, 1993]

§ 178.338–11 Discharge control devices.

(a) Excess-flow valves are not required.

(b) Each liquid filling and liquid discharge line must be provided with a

shut-off valve located as close to the tank as practicable. Unless this valve is manually operable at the valve, the line must also have a manual shut-off valve.

(c) Except for a cargo tank used to transport the following refrigerated liquids: argon, carbon dioxide, helium, krypton, neon, nitrogen, and xenon; each liquid filling and liquid discharge line must be provided with a remotely controlled self-closing shut-off valve. This requirement does not apply to a cargo tank motor vehicle certified before January 1, 1995, unless intended for use to transport flammable ladings. If pressure from a reservoir or from an engine driven pump or compressor is used to open this valve, the control must be of fail-safe design, spring-biased to stop the admission of such pressure. If the jacket is not evacuated, the seat of the valve must be inside the tank, in the opening nozzle or flange, or in a companion flange bolted to the nozzle. If the jacket is evacuated, the remotely controlled valve must be located as close to the tank as practicable.

(1) On a cargo tank with a capacity in excess of 3,500 gallons of water, each remotely controlled shut-off valve must be provided with remote means of automatic closure, both mechanical and thermal, installed at the ends of the cargo tank in at least two diagonally opposite locations. The thermal means shall consist of fusible elements actuated at a temperature not exceeding 250°F., or equivalent devices. One means may be used to close more than one remotely controlled valve.

(2) On a cargo tank with a capacity of 3,500 gallons of water or less, each remotely controlled shut-off valve must be provided with at least one remote control station on the end of the cargo tank opposite the main control station. The remote control station must contain a manual means of closure. In addition, it may contain fusible elements actuated at a temperature not exceeding 250°F., or equivalent devices. One means may be used to close more than one remotely controlled valve.

[Amdt. 178–77, 48 FR 27705, June 16, 1983, as amended by Amdt. 178–105, 59 FR 55173, Nov. 3, 1994; 60 FR 17402, Apr. 5, 1995]

§178.338–12 Shear section.

Unless the valve is located in a rear cabinet forward of and protected by the bumper (see §178.338–10(c)), the design and installation of each valve, damage to which could result in loss of liquid or vapor, must incorporate a shear section or breakage groove adjacent to, and outboard of, the valve. The shear section or breakage groove must yield or break under strain without damage to the valve that would allow the loss of liquid or vapor. The protection specified in §178.338–10 is not a substitute for a shear section or breakage groove.

[Amdt. 178–77, 49 FR 24316, June 12, 1984]

§178.338–13 Supports and anchoring.

(a) All attachments of supports and bumpers to tanks and to load-bearing jackets must be made by means of pads of material similar to that of the tank or jacket, by load rings, or by bosses designed or gusseted to distribute the load. The pad must be at least ¼-inch thick, or as thick as the tank or jacket material, if less, but shall in no case be thicker than the tank or jacket material. Each pad must extend at least four times its thickness, in each direction, beyond the weld attaching the support or bumper. Each pad must be preformed to an inside radius no greater than the outside radius of the tank or jacket at the place of attachment. Each pad corner must be rounded to a radius at least one-fourth the width of the pad and no greater than one-half the width of the pad. If weep holes or telltale holes are used, they must be drilled or punched before the pads are attached. Each pad must be attached to the tank or jacket by continuous fillet welding using filler material having properties conforming to the recommendations of the manufacturer of the tank or jacket material. Any fillet weld discontinuity may only be for the purpose of preventing an intersection between the fillet weld and a tank or jacket seam weld.

(b) A tank motor vehicle constructed so that the cargo tank constitutes in whole or in part the structural member used in place of a motor vehicle frame must have the tank or the jacket supported by external cradles or by load rings. A cargo tank mounted on a

motor vehicle frame must have the tank or jacket supported by external cradles, load rings, or longitudinal members. If cradles are used, they must subtend at least 120 degrees of the cargo tank circumference. The design calculations for the supports and load bearing tank or jacket, and the support attachments must include beam stress, shear stress, torsion stress, bending moment, and acceleration stress for the loaded vehicle as a unit, using a safety factor of four, based on the tensile strength of the material, and static loadings that take into consideration the weight of the cargo tank and its attachments when filled to the design weight of the lading (see appendix G of the ASME Code). The effects of fatigue must also be considered in the calculations. Minimum static loadings must be as follows:

(1) For a vacuum-insulated cargo tank—

(i) Vertically downward of 2;

(ii) Vertically upward of 2;

(iii) Longitudinally of 2; and

(iv) Laterally of 2.

(2) For a nonvacuum-insulated cargo tank—

(i) Vertically downward of 3;

(ii) Vertically upward of 2;

(iii) Longitudinally of 2; and

(iv) Laterally of 2.

(c) When a loaded tank is supported within the vacuum jacket by structural members, the design calculations for the tank and its structural members must be based on a safety factor of four and the tensile strength of the material at ambient temperature. The enhanced tensile strength of the material at actual operating temperature may be substituted for the tensile strength at ambient temperature to the extent recognized in the ASME Code for static loadings. Static loadings must take into consideration the weight of the tank and the structural members when the tank is filled to the design weight of lading (see appendix G of the ASME Code). When load rings in the jacket are used for supporting the tank, they must be designed to carry the fully loaded tank at the specified static loadings, plus external pressure. Minimum static loadings must be as follows:

(1) Vertically downward of 2;

(2) Vertically upward of 1½;

(3) Longitudinally of 1½; and,

(4) Laterally of 1½.

[Amdt. 178–77, 48 FR 27705, June 16, 1983, as amended at 49 FR 24317, June 12, 1984]

§ 178.338–14 Gauging devices.

(a) *Liquid level gauging devices.*

(1) Unless a cargo tank is intended to be filled by weight, it must be equipped with one or more gauging devices, which accurately indicate the maximum permitted liquid level at the loading pressure, in order to provide a minimum of two percent outage below the inlet of the pressure control valve or pressure relief valve at the condition of incipient opening of that valve. A fixed-length dip tube, a fixed trycock line, or a differential pressure liquid level gauge must be used as the primary control for filling. Other gauging devices, except gauge glasses, may be used, but not as the primary control for filling.

(2) The design pressure of each liquid level gauging device must be at least that of the tank.

(3) If a fixed length dip tube or trycock line gauging device is used, it must consist of a pipe or tube of small diameter equipped with a valve at or near the jacket and extending into the cargo tank to a specified filling height. The fixed height at which the tube ends in the cargo tank must be such that the device will function when the liquid reaches the maximum level permitted in loading.

(4) The liquid level gauging device used as a primary control for filling must be designed and installed to accurately indicate the maximum filling level at the point midway of the tank both longitudinally and laterally.

(b) *Pressure gauges.* Each cargo tank must be provided with a suitable pressure gauge indicating the lading pressure and located on the front of the jacket so it can be read by the driver in the rear view mirror. Each gauge must have a reference mark at the cargo tank design pressure or the set pressure of the pressure relief valve or pressure control valve, whichever is lowest.

(c) *Orifices.* All openings for dip tube gauging devices and pressure gauges in flammable cryogenic liquid service must be restricted at or inside the

jacket by orifices no larger than 0.060-inch diameter. Trycock lines, if provided, may not be greater than ½-inch nominal pipe size.

[Amdt. 178–77, 48 FR 27706, June 16, 1983, as amended at 49 FR 24317, June 12, 1984]

§178.338–15 Cleanliness.

A cargo tank constructed for oxygen service must be thoroughly cleaned to remove all foreign material in accordance with CGA Pamphlet G–4.1. All loose particles from fabrication, such as weld beads, dirt, grinding wheel debris, and other loose materials, must be removed prior to the final closure of the manhole of the tank. Chemical or solvent cleaning with a material compatible with the intending lading must be performed to remove any contaminants likely to react with the lading.

[Amdt. 178–77, 48 FR 27706, June 16, 1983]

§178.338–16 Inspection and testing.

(a) *General.* The material of construction of a tank and its appurtenances must be inspected for conformance to the ASME Code. The tank must be subjected to either a hydrostatic or pneumatic test. The test pressure must be one and one-half times the sum of the design pressure, plus static head of lading, plus 14.7 psi if subjected to external vacuum, except that for tanks constructed in accordance with Part UHT of the ASME Code the test pressure must be twice the design pressure.

(b) *Additional requirements for pneumatic test.* A pneumatic test may be used in place of the hydrostatic test. Due regard for protection of all personnel should be taken because of the potential hazard involved in a pneumatic test. The pneumatic test pressure in the tank must be reached by gradually increasing the pressure to one-half of the test pressure. Thereafter, the test pressure must be increased in steps of approximately one-tenth of the test pressure until the required test pressure has been reached. Then the pressure must be reduced to a value equal to four-fifths of the test pressure and held for a sufficient time to permit inspection of the cargo tank for leaks.

(c) *Weld inspection.* All tank shell or head welds subject to pressure shall be radiographed in accordance with the ASME Code. A tank which has been subjected to inspection by the magnetic particle method, the liquid penetrant method, or any method involving a material deposit on the interior tank surface, must be cleaned to remove any such residue by scrubbing or equally effective means, and all such residue and cleaning solution must be removed from the tank prior to final closure of the tank.

(d) *Defect repair.* All cracks and other defects must be repaired as prescribed by the ASME Code. The welder and the welding procedure must be qualified in accordance with the ASME Code. After repair, the tank must again be postweld heat-treated, if such heat treatment was previously performed, and the repaired areas must be retested.

(e) Verification must be made of the interior cleanliness of a tank constructed for oxygen service by means that assure that all contaminants that are likely to react with the lading have been removed as required by §178.338–15.

[Amdt. 178–77, 48 FR 27706, June 16, 1983, as amended at 49 FR 24317, June 12, 1984; 49 FR 42736, Oct. 24, 1984]

§178.338–17 Pumps and compressors.

(a) *Liquid pumps and gas compressors,* if used, must be of suitable design, adequately protected against breakage by collision, and kept in good condition. They may be driven by motor vehicle power take-off or other mechanical, electrical, or hydraulic means. Unless they are of the centrifugal type, they shall be equipped with suitable pressure actuated by-pass valves permitting flow from discharge to suction to the tank.

(b) A valve or fitting made of aluminum with internal rubbing or abrading aluminum parts that may come in contact with oxygen, cryogenic liquid, may not be installed on any cargo tank used to transport oxygen, cryogenic liquid, unless the parts are anodized in accordance with ASTM Standard B 580.

[Amdt. 178–89, 54 FR 25020, June 12, 1989, as amended at 55 FR 37058, Sept. 7, 1990]

§ 178.338–18 Marking.

(a) *Nameplate.* Each tank built after July 1, 1985 shall have a corrosion resistant metal plate permanently affixed by brazing or welding around its perimeter, on the left side (on the right side prior to July 1, 1985) near the front. If this nameplate is attached by welding, it must be welded before the tank is postweld heat-treated. The nameplate must be plainly marked by stamping, embossing, or other means of forming letters into the metal of the plate, in characters at least ⅜-inches high. The following information, in addition to that required by the ASME Code, must be included (parenthetical abbreviations may be used):

(1) DOT Specification number MC–338 (DOT MC–338);

(2) Material specification number (Mat. Spec. No.);

(3) Maximum density of lading for which the tank is designed (Max. Dens. of Lading);

(4) Water capacity, in pounds net at 60°F., with the tank at its coldest operating temperature, after deduction for the volume above the inlet to the pressure relief device or pressure control valve, structural members, baffles, piping, and other appurtenances inside the tank (W. Cap.); and

(5) Original test date (Orig. Test Date);

(b) *Specification plate.* Each tank built after July 1, 1985 shall have an additional plate, in the form specified in paragraph (a) of this section. It must be welded, brazed, or riveted to the jacket on the left side (on the right side prior to July 1, 1985) near the front, or at the control station, in a position readily legible to operating personnel. It must be marked with the information specified in paragraph (a) of this section and in addition, in characters at least ⅜-inches high, the following (parenthetical abbreviations may be used):

(1) Vehicle manufacturer (Veh. Mfr.);

(2) Manufacturer's vehicle serial number (Veh. No.);

(3) Lining material, if any (Lining);

(4) Date of manufacture (Date of Mfr.);

(5) Certificate date (Cert. Date);

(6) Design service temperature (Design Serv. Temp.);

(7) ''Insulation for Oxygen Service'' or ''Not Authorized for Oxygen Service,'' as appropriate;

(8) Maximum weight of lading for which the cargo tank is designed, in pounds (Max. Net Wt. —— lbs.);

(9) Marked rated holding time for at least one cryogenic liquid, in hours, and the name of that cryogenic liquid (MRHT —— hrs, name of cryogenic liquid). MRHT markings for additional cryogenic liquids may be displayed on or adjacent to the specification plate.

(c) The design weight of lading used in determining the loading in §§ 178.338–3(b), 178.338–10 (b) and (c), and 178.338–13 (b) and (c) must be shown as the maximum weight of lading marking required by paragraph (b) of this section.

[Amdt. 178–77, 48 FR 27706, June 16, 1983, as amended at 49 FR 24317, June 12, 1984; Amdt. 178–83, 50 FR 11066, Mar. 19, 1985; Amdt. 178–85, 51 FR 5976, Feb. 18, 1986]

§ 178.338–19 Certification.

(a) At or before the time of delivery, the manufacturer of a cargo tank motor vehicle shall furnish to the owner of the completed vehicle the following:

(1) The tank manufacturer's data report as required by the ASME Code, and a certificate bearing the manufacturer's vehicle serial number stating that the completed cargo tank motor vehicle conforms to all applicable requirements of Specification MC 338, including the ASME Code in effect on the date (month, year) of certification. The registration numbers of the manufacturer, the Design Certifying Engineer, and the Registered Inspector, as appropriate, must appear on the certificates (See subpart F, part 107 in subchapter B of this chapter).

(i) For each design type, the certificate must be signed by a responsible official of the manufacturer and a Design Certifying Engineer; and

(ii) For each cargo tank motor vehicle, the certificate must be signed by a responsible official of the manufacturer and a Design Certifying Engineer;

(2) A photograph, pencil rub, or other facsimile of the plates required by paragraphs (a) and (b) of § 178.338-18.

(b) In the case of a cargo tank vehicle manufactured in two or more stages, each manufacturer who performs a

manufacturing operation on the incomplete vehicle or portion thereof shall furnish to the succeeding manufacturer, at or before the time of delivery, a certificate covering the particular operation performed by that manufacturer, and any certificates received from previous manufacturers, Registered Inspectors, and Design Certifying Engineers. The certificates must include sufficient sketches, drawings, and other information to indicate the location, make, model and size of each valve and the arrangement of all piping associated with the tank. Each certificate must be signed by an official of the manufacturing firm responsible for the portion of the complete cargo tank vehicle represented thereby, such as basic tank fabrication, insulation, jacket, or piping. The final manufacturer shall furnish the owner with all certificates, as well as the documents required by paragraph (a) of this section.

(c) The owner shall retain the data report, certificates, and related papers throughout his ownership of the cargo tank. In the event of change of ownership, the prior owner shall retain nonfading photographically reproduced copies of these documents for at least one year. Each operator using the cargo tank vehicle, if not the owner thereof, shall obtain a copy of the data report and the certificate or certificates and retain them during the time he uses the cargo tank and for at least one year thereafter.

(Approved by the Office of Management and Budget under control number 2137–0017)

[Amdt. 178–77, 48 FR 27707 and 27713, June 16, 1983, as amended by Amdt. 178–89, 55 FR 37058, Sept. 7, 1990; Amdt. 178–99, 58 FR 51534, Oct. 1, 1993; 62 FR 51561, Oct. 1, 1997]

§§178.340—178.343 [Reserved]

§178.345 General design and construction requirements applicable to Specification DOT 406 (§178.346), DOT 407 (§178.347), and DOT 412 (§178.348) cargo tank motor vehicles.

§178.345–1 General requirements.

(a) Specification DOT 406, DOT 407 and DOT 412 cargo tank motor vehicles must conform to the requirements of this section in addition to the requirements of the applicable specification contained in §§178.346, 178.347 or 178.348.

(b) All specification requirements are minimum requirements.

(c) *Definitions.* The following terms apply to §§178.345, 178.346, 178.347 and 178.348.

Appurtenance means any cargo tank accessory attachment that has no lading retention or containment function and provides no structural support to the cargo tank.

Baffle means a non-liquid-tight transverse partition device that deflects, checks or regulates fluid motion in a tank.

Bulkhead means a liquid-tight transverse closure at the ends of or between cargo tanks.

Charging line means a hose, tube, pipe, or similar device used to pressurize a tank with material other than the lading.

Companion flange means one of two mating flanges where the flange faces are in contact or separated only by a thin leak sealing gasket and are secured to one another by bolts or clamps.

Connecting structure means the structure joining two cargo tanks.

Constructed and certified in conformance with the ASME Code means the cargo tank is constructed and stamped in accordance with the ASME Code, and is inspected and certified by an Authorized Inspector.

Constructed in accordance with the ASME Code means the cargo tank is constructed in accordance with the ASME Code with the authorized exceptions (see §§178.346, 178.347, and 178.348) and is inspected and certified by a Registered Inspector.

External self-closing stop-valve means a self-closing stop-valve designed so that the self-stored energy source is located outside the cargo tank and the welded flange.

Extreme dynamic loading means the maximum single-acting loading a cargo tank motor vehicle may experience during its expected life, excluding accident loadings.

Flange means the structural ring for guiding or attachment of a pipe or fitting with another flange (companion

flange), pipe, fitting or other attachment.

Inspection pressure means the pressure used to determine leak tightness of the cargo tank when testing with pneumatic pressure.

Internal self-closing stop-valve means a self-closing stop-valve designed so that the self-stored energy source is located inside the cargo tank or cargo tank sump, or within the welded flange, and the valve seat is located within the cargo tank or within one inch of the external face of the welded flange or sump of the cargo tank.

Lading means the hazardous material contained in a cargo tank.

Loading/unloading connection means the fitting in the loading/unloading line farthest from the loading/unloading outlet to which the loading/unloading hose or device is attached.

Loading/unloading outlet means the cargo tank outlet used for normal loading/unloading operations.

Loading/unloading stop-valve means the stop valve farthest from the cargo tank loading/unloading outlet to which the loading/unloading connection is attached.

Maximum allowable working pressure or *MAWP*. See § 178.345–1(k).

Multi-specification cargo tank motor vehicle means a cargo tank motor vehicle equipped with two or more cargo tanks fabricated to more than one cargo tank specification.

Normal operating loading means the loading a cargo tank motor vehicle may be expected to experience routinely in operation.

Nozzle means the subassembly consisting of a pipe or tubular section with or without a welded or forged flange on one end.

Outlet means any opening in the shell or head of a cargo tank, (including the means for attaching a closure), except that the following are not outlets: A threaded opening securely closed during transportation with a threaded plug or a threaded cap, a flanged opening securely closed during transportation with a bolted or welded blank flange, a manhole, or gauging devices, thermometer wells, and safety relief devices.

Outlet stop-valve means the stop-valve at the cargo tank loading/unloading outlet.

Pipe coupling means a fitting with internal threads on both ends.

Rear bumper means the structure designed to prevent a vehicle or object from under-riding the rear of a motor vehicle. See § 393.86 of this title.

Rear-end tank protection device means the structure designed to protect a cargo tank and any lading retention piping or devices in case of a rear end collision.

Sacrificial Device means an element, such as a shear section, designed to fail under load in order to prevent damage to any lading retention part or device. The device must break under strain at no more than 70 percent of the strength of the weakest piping element between the cargo tank and the sacrificial device. Operation of the sacrificial device must leave the remaining piping and its attachment to the cargo tank intact and capable of retaining lading.

Self-closing stop-valve means a stop-valve held in the closed position by means of self-stored energy, which opens only by application of an external force and which closes when the external force is removed.

Shear section means a sacrificial device fabricated in such a manner as to abruptly reduce the wall thickness of the adjacent piping or valve material by at least 30 percent.

Shell means the circumferential portion of a cargo tank defined by the basic design radius or radii excluding the closing heads.

Stop-valve means a valve that stops the flow of lading.

Sump means a protrusion from the bottom of a cargo tank shell designed to facilitate complete loading and unloading of lading.

Tank means a container, consisting of a shell and heads, that forms a pressure tight vessel having openings designed to accept pressure tight fittings or closures, but excludes any appurtenances, reinforcements, fittings, or closures.

Test pressure means the pressure to which a tank is subjected to determine pressure integrity.

Toughness of material means the capability of a material to absorb the energy represented by the area under the stress strain curve (indicating the energy absorbed per unit volume of the material) up to the point of rupture.

Vacuum cargo tank means a cargo tank that is loaded by reducing the pressure in the cargo tank to below atmospheric pressure.

Variable specification cargo tank means a cargo tank that is constructed in accordance with one specification, but which may be altered to meet another specification by changing relief device, closures, lading discharge devices, and other lading retention devices.

Void means the space between tank heads or bulkheads and a connecting structure.

Welded flange means a flange attached to the tank by a weld joining the tank shell to the cylindrical outer surface of the flange, or by a fillet weld joining the tank shell to a flange shaped to fit the shell contour.

(d) A manufacturer of a cargo tank must hold a current ASME certificate of authorization and must be registered with the Department in accordance with part 107, subpart F of this chapter.

(e) All construction must be certified by an Authorized Inspector or by a Registered Inspector as applicable to the cargo tank.

(f) Each cargo tank must be designed and constructed in conformance with the requirements of the applicable cargo tank specification. Each DOT 412 cargo tank with a maximum allowable working pressure greater than 15 psig, and each DOT 407 cargo tank with a maximum allowable working pressure greater than 35 psig must be ''constructed and certified in conformance with the ASME Code'' except as limited or modified by the applicable cargo tank specification. Other cargo tanks must be ''constructed in accordance with the ASME Code'', except as limited or modified by the applicable cargo tank specification.

(g) Requirements relating to parts and accessories on motor vehicles, which are contained in part 393 of the Federal Motor Carrier Safety Regulations of this title, are incorporated into these specifications.

(h) Any additional requirements prescribed in part 173 of this subchapter that pertain to the transportation of a specific lading are incorporated into these specifications.

(i) *Cargo tank motor vehicle composed of multiple cargo tanks.*

(1) A cargo tank motor vehicle composed of more than one cargo tank may be constructed with the cargo tanks made to the same specification or to different specifications. Each cargo tank must conform in all respects with the specification for which it is certified.

(2) The strength of the connecting structure joining multiple cargo tanks in a cargo tank motor vehicle must meet the structural design requirements in §178.345–3. Any void within the connecting structure must be vented to the atmosphere and have a drain located on the bottom centerline. Each drain must be accessible and must be kept open at all times. The drain in any void within the connecting structure of a carbon steel, self-supporting cargo tank may be either a single drain of at least 1.0 inch diameter, or two or more drains of at least 0.5 inch diameter, 6.0 inches apart, one of which is located on the bottom centerline.

(j) *Variable specification cargo tank.* A cargo tank that may be physically altered to conform to another cargo tank specification must have the required physical alterations to convert from one specification to another clearly indicated on the variable specification plate.

(k) *Maximum Allowable Working Pressure (MAWP).* The MAWP for each cargo tank must be greater than or equal to the largest of the following (the MAWP derived is the pressure to be used as prescribed in the ASME Code in the design of the tank):

(1) The pressure prescribed for the lading in part 173;

(2) Vapor pressure of the most volatile lading, at 115 °F (expressed in psig), plus the maximum static pressure exerted by the lading at the maximum lading density, plus any pressure exerted by a gas padding (including air in the ullage space or dome), if used; or

(3) The maximum pressure in the tank during loading or unloading.

[Amdt. 178–89, 54 FR 25020, June 12, 1989, as amended at 55 FR 37058, Sept. 7, 1990; Amdt. 178–105, 59 FR 55173, Nov. 3, 1994; Amdt. 178–118, 61 FR 51340, Oct. 1, 1996]

§ 178.345–2 Material and material thickness.

(a) All material for shell, heads, bulkheads, and baffles must conform to section II, parts A and B, of the ASME Code except as follows:

(1) The following steels are also authorized for cargo tanks ''constructed in accordance with the ASME Code''.

ASTM A 569
ASTM A 570
ASTM A 572
ASTM A 607
ASTM A 622
ASTM A 656
ASTM A 715

(2) Aluminum alloys suitable for fusion welding and conforming with the 0, H32 or H34 tempers of one of the following ASTM specifications may be used for cargo tanks ''constructed in accordance with the ASME Code'':

ASTM B–209 Alloy 5052
ASTM B–209 Alloy 5086
ASTM B–209 Alloy 5154
ASTM B–209 Alloy 5254
ASTM B–209 Alloy 5454
ASTM B–209 Alloy 5652

All heads, bulkheads and baffles must be of 0 temper (annealed) or stronger tempers. All shell materials shall be of H 32 or H 34 tempers except that the lower ultimate strength tempers may be used if the minimum shell thicknesses in the tables are increased in inverse proportion to the lesser ultimate strength.

(b) *Minimum thickness.* The minimum thickness for the shell and heads must be such that the maximum stress levels specified in § 178.345–3 of this subpart are not exceeded. In no case may the shell or head thickness be less than that specified in the applicable specification.

(c) *Corrosion or abrasion protection.* When required by 49 CFR part 173 for a particular lading, a cargo tank or a part thereof, subject to thinning by corrosion or mechanical abrasion due to the lading, must be protected by providing the tank or part of the tank with a suitable increase in thickness of material, a lining or some other suitable method of protection.

(1) *Corrosion allowance.* Material added for corrosion allowance need not be of uniform thickness if different rates of attack can reasonably be expected for various areas of the cargo tank.

(2) *Lining.* Lining material must consist of a nonporous, homogeneous material not less elastic than the parent metal and substantially immune to attack by the lading. The lining material must be bonded or attached by other appropriate means to the cargo tank wall and must be imperforate when applied. Any joint or seam in the lining must be made by fusing the materials together, or by other satisfactory means.

[Amdt. 178–89, 54 FR 25021, June 12, 1989, as amended at 55 FR 37059, Sept. 7, 1990; 56 FR 27876, June 17, 1991; Amdt. 178–97, 57 FR 45465, Oct. 1, 1992; Amdt. 178–118, 61 FR 51341, Oct. 1, 1996]

§ 178.345–3 Structural integrity.

(a) *General requirements and acceptance criteria.* (1) The maximum calculated design stress at any point in the cargo tank wall may not exceed the maximum allowable stress value prescribed in section VIII of the ASME Code, or 25 percent of the tensile strength of the material used at design conditions.

(2) The relevant physical properties of the materials used in each cargo tank may be established either by a certified test report from the material manufacturer or by testing in conformance with a recognized national standard. In either case, the ultimate tensile strength of the material used in the design may not exceed 120 percent of the minimum ultimate tensile strength specified in either the ASME Code or the ASTM standard to which the material is manufactured.

(3) The maximum design stress at any point in the cargo tank must be calculated separately for the loading conditions described in paragraphs (b) and (c) of this section. Alternate test or analytical methods, or a combination thereof, may be used in place of the procedures described in paragraphs

(b) and (c) of this section, if the methods are accurate and verifiable.

(4) Corrosion allowance material may not be included to satisfy any of the design calculation requirements of this section.

(b) *ASME Code design and construction.* The static design and construction of each cargo tank must be in accordance with Section VIII, Division 1 of the ASME Code. The cargo tank design must include calculation of stresses generated by the MAWP, the weight of the lading, the weight of structures supported by the cargo tank wall and the effect of temperature gradients resulting from lading and ambient temperature extremes. When dissimilar materials are used, their thermal coefficients must be used in the calculation of thermal stresses.

(1) Stress concentrations in tension, bending and torsion which occur at pads, cradles, or other supports must be considered in accordance with Appendix G of Section VIII, Division 1 of the ASME Code.

(2) Longitudinal compressive buckling stress for ASME certified vessels must be calculated using paragraph UG–23(b), Section VIII, Division 1 of the ASME Code. For cargo tanks not required to be certified in accordance with the ASME Code, compressive buckling stress may be calculated using alternative analysis methods which are accurate and verifiable. When alternative methods are used calculations must include both the static loads described in this paragraph and the dynamic loads described in paragraph (c) of this section.

(c) *Shell design.* Shell stresses resulting from static or dynamic loadings, or combinations thereof, are not uniform throughout the cargo tank motor vehicle. The vertical, longitudinal, and lateral normal operating loadings can occur simultaneously and must be combined. The vertical, longitudinal and lateral extreme dynamic loadings occur separately and need not be combined.

(1) *Normal operating loadings.* The following procedure addresses stress in the cargo tank shell resulting from normal operating loadings. The effective stress (the maximum principal stress at any point) must be determined by the following formula:

$$S = 0.5(S_y + S_x) \pm [0.25(S_y - S_x)^2 + S_S2]^{0.5}$$

Where:

(i) S = effective stress at any given point under the combination of static and normal operating loadings that can occur at the same time, in psi.

(ii) S_y = circumferential stress generated by the MAWP and external pressure, when applicable, plus static head, in psi.

(iii) S_x = The following net longitudinal stress generated by the following static and normal operating loading conditions, in psi:

(A) The longitudinal stresses resulting from the MAWP and external pressure, when applicable, plus static head, in combination with the bending stress generated by the static weight of the fully loaded cargo tank motor vehicle, all structural elements, equipment and appurtenances supported by the cargo tank wall;

(B) The tensile or compressive stress resulting from normal operating longitudinal acceleration or deceleration. In each case, the forces applied must be 0.35 times the vertical reaction at the suspension assembly, applied at the road surface, and as transmitted to the cargo tank wall through the suspension assembly of a trailer during deceleration; or the horizontal pivot of the truck tractor or converter dolly fifth wheel, or the drawbar hinge on the fixed dolly during acceleration; or anchoring and support members of a truck during acceleration and deceleration, as applicable. The vertical reaction must be calculated based on the static weight of the fully loaded cargo tank motor vehicle, all structural elements, equipment and appurtenances supported by the cargo tank wall. The following loadings must be included:

(*1*) The axial load generated by a decelerative force;

(*2*) The bending moment generated by a decelerative force;

(*3*) The axial load generated by an accelerative force; and

(*4*) The bending moment generated by an accelerative force; and

(C) The tensile or compressive stress generated by the bending moment resulting from normal operating vertical accelerative force equal to 0.35 times

the vertical reaction at the suspension assembly of a trailer; or the horizontal pivot of the upper coupler (fifth wheel) or turntable; or anchoring and support members of a truck, as applicable. The vertical reaction must be calculated based on the static weight of the fully loaded cargo tank motor vehicle, all structural elements, equipment and appurtenances supported by the cargo tank wall.

(iv) S_S = The following shear stresses generated by the following static and normal operating loading conditions, in psi:

(A) The static shear stress resulting from the vertical reaction at the suspension assembly of a trailer, and the horizontal pivot of the upper coupler (fifth wheel) or turntable; or anchoring and support members of a truck, as applicable. The vertical reaction must be calculated based on the static weight of the fully loaded cargo tank motor vehicle, all structural elements, equipment and appurtenances supported by the cargo tank wall;

(B) The vertical shear stress generated by a normal operating accelerative force equal to 0.35 times the vertical reaction at the suspension assembly of a trailer; or the horizontal pivot of the upper coupler (fifth wheel) or turntable; or anchoring and support members of a truck, as applicable. The vertical reaction must be calculated based on the static weight of the fully loaded cargo tank motor vehicle, all structural elements, equipment and appurtenances supported by the cargo tank wall;

(C) The lateral shear stress generated by a normal operating lateral accelerative force equal to 0.2 times the vertical reaction at each suspension assembly of a trailer, applied at the road surface, and as transmitted to the cargo tank wall through the suspension assembly of a trailer, and the horizontal pivot of the upper coupler (fifth wheel) or turntable; or anchoring and support members of a truck, as applicable. The vertical reaction must be calculated based on the static weight of the fully loaded cargo tank motor vehicle, all structural elements, equipment and appurtenances supported by the cargo tank wall; and

(D) The torsional shear stress generated by the same lateral forces as described in paragraph (c)(1)(iv)(C) of this section.

(2) *Extreme dynamic loadings.* The following procedure addresses stress in the cargo tank shell resulting from extreme dynamic loadings. The effective stress (the maximum principal stress at any point) must be determined by the following formula:

$$S = 0.5(S_y + S_x) \pm [0.25(S_y - S_x)^2 + S_S^2]^{0.5}$$

Where:

(i) S = effective stress at any given point under a combination of static and extreme dynamic loadings that can occur at the same time, in psi.

(ii) S_y = circumferential stress generated by MAWP and external pressure, when applicable, plus static head, in psi.

(iii) S_x = the following net longitudinal stress generated by the following static and extreme dynamic loading conditions, in psi:

(A) The longitudinal stresses resulting from the MAWP and external pressure, when applicable, plus static head, in combination with the bending stress generated by the static weight of the fully loaded cargo tank motor vehicle, all structural elements, equipment and appurtenances supported by the tank wall;

(B) The tensile or compressive stress resulting from extreme longitudinal acceleration or deceleration. In each case the forces applied must be 0.7 times the vertical reaction at the suspension assembly, applied at the road surface, and as transmitted to the cargo tank wall through the suspension assembly of a trailer during deceleration; or the horizontal pivot of the truck tractor or converter dolly fifth wheel, or the drawbar hinge on the fixed dolly during acceleration; or the anchoring and support members of a truck during acceleration and deceleration, as applicable. The vertical reaction must be calculated based on the static weight of the fully loaded cargo tank motor vehicle, all structural elements, equipment and appurtenances supported by the cargo tank wall. The following loadings must be included:

(*1*) The axial load generated by a decelerative force;

(*2*) The bending moment generated by a decelerative force;

(*3*) The axial load generated by an accelerative force; and

(*4*) The bending moment generated by an accelerative force; and

(C) The tensile or compressive stress generated by the bending moment resulting from an extreme vertical accelerative force equal to 0.7 times the vertical reaction at the suspension assembly of a trailer, and the horizontal pivot of the upper coupler (fifth wheel) or turntable; or the anchoring and support members of a truck, as applicable. The vertical reaction must be calculated based on the static weight of the fully loaded cargo tank motor vehicle, all structural elements, equipment and appurtenances supported by the cargo tank wall.

(iv) S_S = The following shear stresses generated by static and extreme dynamic loading conditions, in psi:

(A) The static shear stress resulting from the vertical reaction at the suspension assembly of a trailer, and the horizontal pivot of the upper coupler (fifth wheel) or turntable; or anchoring and support members of a truck, as applicable. The vertical reaction must be calculated based on the static weight of the fully loaded cargo tank motor vehicle, all structural elements, equipment and appurtenances supported by the cargo tank wall;

(B) The vertical shear stress generated by an extreme vertical accelerative force equal to 0.7 times the vertical reaction at the suspension assembly of a trailer, and the horizontal pivot of the upper coupler (fifth wheel) or turntable; or anchoring and support members of a truck, as applicable. The vertical reaction must be calculated based on the static weight of the fully loaded cargo tank motor vehicle, all structural elements, equipment and appurtenances supported by the cargo tank wall;

(C) The lateral shear stress generated by an extreme lateral accelerative force equal to 0.4 times the vertical reaction at the suspension assembly of a trailer, applied at the road surface, and as transmitted to the cargo tank wall through the suspension assembly of a trailer, and the horizontal pivot of the upper coupler (fifth wheel) or turntable; or anchoring and support members of a truck, as applicable. The vertical reaction must be calculated based on the static weight of the fully loaded cargo tank motor vehicle, all structural elements, equipment and appurtenances supported by the cargo tank wall; and

(D) The torsional shear stress generated by the same lateral forces as described in paragraph (c)(2)(iv)(C) of this section.

(d) In no case may the minimum thickness of the cargo tank shells and heads be less than that prescribed in § 178.346–2, § 178.347–2, or § 178.348–2, as applicable.

(e) For a cargo tank mounted on a frame or built with integral structural supports, the calculation of effective stresses for the loading conditions in paragraph (c) of this section may include the structural contribution of the frame or the integral structural supports.

(f) The design, construction, and installation of an appurtenance to the cargo tank must conform to the following requirements:

(1) Structural members, the suspension subframe, accident protection and external rings must be used as sites for attachment of appurtenances and other accessories to the cargo tank, when practicable.

(2) A lightweight attachment to the cargo tank wall, such as a conduit clip, brakeline clip, skirting structure, lamp mounting bracket, or placard holder, must be of a construction having lesser strength than the cargo tank wall materials and may not be more than 72 percent of the thickness of the material to which it is attached. The lightweight attachment may be secured directly to the cargo tank wall if the device is designed and installed in such a manner that, if damaged, it will not affect the lading retention integrity of the tank. A lightweight attachment must be secured to the cargo tank shell or head by continuous weld or in such a manner as to preclude formation of pockets, which may become sites for incipient corrosion.

(3) Except as prescribed in paragraphs (g)(1) and (g)(2) of this section, the welding of any appurtenance to the

cargo tank wall must be made by attachment of a mounting pad, so that there will be no adverse effect upon the lading retention integrity of the cargo tank if any force less than that prescribed in § 178.345–8(b)(1) of this subchapter is applied from any direction. The thickness of the mounting pad may not be less than that of the shell or head to which it is attached, and not more than 1.5 times the shell or head thickness. However, a pad with a minimum thickness of 0.187 inch may be used when the shell or head thickness is over 0.187 inch. If weep holes or telltale holes are used, the pad must be drilled or punched at its lowest point before it is welded. Each pad must—

(i) Extend at least 2 inches in each direction from any point of attachment of an appurtenance;

(ii) Have rounded corners, or otherwise be shaped in a manner to minimize stress concentrations on the shell or head; and

(iii) Be attached by a continuous weld around the pad except for a small gap at the lowest point for draining.

[Amdt. 178–89, 55 FR 37059, Sept. 7, 1990, as amended by Amdt. 178–89, 56 FR 27876, June 17, 1991; Amdt. 178–104, 59 FR 49135, Sept. 26, 1994; Amdt. 178–105, 59 FR 55173, 55174 and 55175, Nov. 3, 1994; 60 FR 17402, Apr. 5, 1995; Amdt. 178–118, 61 FR 51341, Oct. 1, 1996]

§ 178.345–4 Joints.

(a) All joints between the cargo tank shell, heads, baffles, baffle attaching rings, and bulkheads must be welded in conformance with the ASME Code welding procedures.

(b) Where practical all welds must be easily accessible for inspection.

[Amdt. 178–89, 54 FR 25022, June 12, 1989, as amended by Amdt. 178–118, 61 FR 51341, Oct. 1, 1996]

§ 178.345–5 Manhole assemblies.

(a) Each cargo tank with capacity greater than 400 gallons must be accessible through a manhole at least 15 inches in diameter.

(b) Each manhole, fill opening and washout assembly must be structurally capable of withstanding, without leakage or permanent deformation that would affect its structural integrity, a static internal fluid pressure of at least 36 psig, or cargo tank test pressure, whichever is greater. The manhole assembly manufacturer shall verify compliance with this requirement by hydrostatically testing at least one percent (or one manhole closure, whichever is greater) of all manhole closures of each type produced each 3 months, as follows:

(1) The manhole, fill opening, or washout assembly must be tested with the venting devices blocked. Any leakage or deformation that would affect the product retention capability of the assembly shall constitute a failure.

(2) If the manhole, fill opening, or washout assembly tested fails, then five more covers from the same lot must be tested. If one of these five covers fails, then all covers in the lot from which the tested covers were selected are to be 100% tested or rejected for service.

(c) Each manhole, filler and washout cover must be fitted with a safety device that prevents the cover from opening fully when internal pressure is present.

(d) Each manhole and fill cover must be secured with fastenings that will prevent opening of the covers as a result of vibration under normal transportation conditions or shock impact due to a rollover accident on the roadway or shoulder where the fill cover is not struck by a substantial obstacle.

(e) Each manhole cover must be permanently marked by stamping or other means with:

(1) Manufacturer's name;

(2) Test pressure _____ psig;

(3) A statement certifying that the manhole cover meets the requirements in § 178.345–5.

(f) All fittings and devices mounted on a manhole cover, coming in contact with the lading, must withstand the same static internal fluid pressure and contain the same permanent compliance markings as that required for the manhole cover. The fitting or device manufacturer shall verify compliance using the same test procedure and frequency of testing as specified in § 178.345–5(b).

[Amdt. 178–89, 54 FR 25022, June 12, 1989, as amended by Amdt. 178–105, 59 FR 55175, Nov. 3, 1994]

§178.345–6 Supports and anchoring.

(a) A cargo tank with a frame not integral to the cargo tank must have the tank secured by restraining devices to eliminate any motion between the tank and frame that may abrade the tank shell due to the stopping, starting, or turning of the cargo tank motor vehicle. The design calculations of the support elements must include the stresses indicated in §178.345–3(b) and as generated by the loads described in §178.345–3(c). Such restraining devices must be readily accessible for inspection and maintenance, except that insulation and jacketing are permitted to cover the restraining devices.

(b) A cargo tank designed and constructed so that it constitutes, in whole or in part, the structural member used in lieu of a frame must be supported in such a manner that the resulting stress levels in the cargo tank do not exceed those specified in §178.345–3(a). The design calculations of the support elements must include the stresses indicated in §178.345–3(b) and as generated by the loads described in §178.345–3(c).

[Amdt. 178–89, 54 FR 25023, June 12, 1989, as amended by Amdt. 178–105, 59 FR 55175, Nov. 3, 1994; Amdt. 178–118, 61 FR 51341, Oct. 1, 1996]

§178.345–7 Circumferential reinforcements.

(a) A cargo tank with a shell thickness of less than ⅜ inch must be circumferentially reinforced with bulkheads, baffles, ring stiffeners, or any combination thereof, in addition to the cargo tank heads.

(1) Circumferential reinforcement must be located so that the thickness and tensile strength of the shell material in combination with the frame and reinforcement produces structural integrity at least equal to that prescribed in §178.345–3 and in such a manner that the maximum unreinforced portion of the shell does not exceed 60 inches. For cargo tanks designed to be loaded by vacuum, spacing of circumferential reinforcement may exceed 60 inches provided the maximum unreinforced portion of the shell conforms with the requirements of Section VIII, Division 1 of the ASME Code.

(2) Where circumferential joints are made between conical shell sections, or between conical and cylindrical shell sections, and the angle between adjacent sections is less than 160 degrees, circumferential reinforcement must be located within one inch of the shell joint, unless otherwise reinforced with structural members capable of maintaining shell stress levels authorized in §178.345–3. When the joint is formed by the large ends of adjacent conical shell sections, or by the large end of a conical shell and a cylindrical shell section, this angle is measured inside the shell; when the joint is formed by the small end of a conical shell section and a cylindrical shell section, it is measured outside the shell.

(b) Except for doubler plates and knuckle pads, no reinforcement may cover any circumferential joint.

(c) When a baffle or baffle attachment ring is used as a circumferential reinforcement member, it must produce structural integrity at least equal to that prescribed in §178.345–3 and must be circumferentially welded to the cargo tank shell. The welded portion may not be less than 50 percent of the total circumference of the cargo tank and the length of any unwelded space on the joint may not exceed 40 times the shell thickness unless reinforced external to the cargo tank.

(d) When a ring stiffener is used as a circumferential reinforcement member, whether internal or external, reinforcement must be continuous around the circumference of the cargo tank shell and must be in accordance with the following:

(1) The section modulus about the neutral axis of the ring section parallel to the shell must be at least equal to that derived from the applicable formula:

$I/C=0.00027WL$, for MS, HSLA and SS; or
$I/C=0.000467WL$, for aluminum alloys;

[1] Where:

I/C=Section modulus in inches ^{3}
W=Tank width, or diameter, inches
L=Spacing of ring stiffener, inches; i.e., the maximum longitudinal distance from the midpoint of the unsupported shell on one side of the ring stiffener to the midpoint of the unsupported shell on the opposite side of the ring stiffener.

(2) If a ring stiffener is welded to the cargo tank shell, a portion of the shell may be considered as part of the ring section for purposes of computing the ring section modulus. This portion of the shell may be used provided at least 50 percent of the total circumference of the cargo tank is welded and the length of any unwelded space on the joint does not exceed 40 times the shell thickness. The maximum portion of the shell to be used in these calculations is as follows:

Number of circumferential ring stiffener-to-shell welds	J [1]	Shell section
1		20t
2	Less than 20t	20t+J
2	20t or more	40t

[1] where:
t=Shell thickness, inches;
J=Longitudinal distance between parallel circumferential ring stiffener-to-shell welds.

(3) When used to meet the vacuum requirements of this section, ring stiffeners must be as prescribed in the ASME Code.

(4) If configuration of internal or external ring stiffener encloses an air space, this air space must be arranged for venting and be equipped with drainage facilities which must be kept operative at all times.

(5) Hat shaped or open channel ring stiffeners which prevent visual inspection of the cargo tank shell are prohibited on cargo tank motor vehicles constructed of carbon steel.

[Amdt. 178–89, 55 FR 37060, Sept. 7, 1990; as amended by Amdt. 178–89, 56 FR 27876, June 17, 1991; 56 FR 46354, Sept. 11, 1991; Amdt. 178–104, 59 FR 49135, Sept. 26, 1994; Amdt. 178–118, 61 FR 51341, Oct. 1, 1996]

§ 178.345–8 Accident damage protection.

(a) *General.* Each cargo tank motor vehicle must be designed and constructed in accordance with the requirements of this section and the applicable individual specification to minimize the potential for the loss of lading due to an accident.

(1) Any dome, sump, or washout cover plate projecting from the cargo tank wall that retains lading in any tank orientation, must be as strong and tough as the cargo tank wall and have a thickness at least equal to that specified by the appropriate cargo tank specification. Any such projection located in the lower ⅓ of the tank circumference (or cross section perimeter for non-circular cargo tanks) that extends more than half its diameter at the point of attachment to the tank or more than 4 inches from the cargo tank wall, or located in the upper ⅔ of the tank circumference (or cross section perimeter for non-circular cargo tanks) that extends more than ¼ its diameter or more than 2 inches from the point of attachment to the tank must have accident damage protection devices that are:

(i) As specified in this section;

(ii) 125 percent as strong as the otherwise required accident damage protection device; or

(iii) Attached to the cargo tank in accordance with the requirements of paragraph (a)(3) of this section.

(2) Outlets, valves, closures, piping, or any devices that if damaged in an accident could result in a loss of lading from the cargo tank must be protected by accident damage protection devices as specified in this section.

(3) Accident damage protection devices attached to the wall of a cargo tank must be able to withstand or deflect away from the cargo tank the loads specified in this section. They must be designed, constructed and installed so as to maximize the distribution of loads to the cargo tank wall and to minimize the possibility of adversely affecting the lading retention integrity of the cargo tank. Accident induced stresses resulting from the appropriate accident damage protection device requirements in combination with the stresses from the cargo tank operating at the MAWP may not result in a cargo tank wall stress greater than the ultimate strength of the material of construction using a safety factor of 1.3. Deformation of the protection device is acceptable provided the devices being protected are not damaged when loads specified in this section are applied.

(4) Any piping that extends beyond an accident damage protection device must be equipped with a stop-valve and a sacrificial device such as a shear section. The sacrificial device must be located in the piping system outboard of the stop-valve and within the accident

damage protection device to prevent any accidental loss of lading. The device must break at no more than 70 percent of the load that would be required to cause the failure of the protected lading retention device, part or cargo tank wall. The failure of the sacrificial device must leave the protected lading retention device and its attachment to the cargo tank wall intact and capable of retaining product.

(5) *Minimum road clearance.* The minimum allowable road clearance of any cargo tank motor vehicle component or protection device located between any two adjacent axles on a vehicle or vehicle combination must be at least one-half inch for each foot separating such axles, and in no case less than 12 inches.

(b) Each outlet, projection or piping located in the lower ⅓ of the cargo tank circumference (or cross section perimeter for non-circular cargo tanks) that could be damaged in an accident that may result in the loss of lading must be protected by a bottom damage protection device, except as provided by paragraph (a)(1) of this section and §173.33(e) of this subchapter. Outlets, projections and piping may be grouped or clustered together and protected by a single protection device.

(1) Any bottom damage protection device must be able to withstand a force of 155,000 pounds (based on the ultimate strength of the material) from the front, side, or rear, uniformly distributed over each surface of the device, over an area not to exceed 6 square feet, and a width not to exceed 6 feet. Suspension components and structural mounting members may be used to provide all, or part, of this protection. The device must extend no less than 6 inches beyond any component that may contain lading in transit.

(2) A lading discharge opening equipped with an internal self-closing stop-valve need not conform to paragraph (b)(1) of this section provided it is protected so as to reasonably assure against the accidental loss of lading. This protection must be provided by a sacrificial device located outboard of each internal self-closing stop-valve and within 4 inches of the major radius of the cargo tank shell or within 4 inches of a sump, but in no case more than 8 inches from the major radius of the tank shell. The device must break at no more than 70 percent of the load that would be required to cause the failure of the protected lading retention device, part or cargo tank wall. The failure of the sacrificial device must leave the protected lading retention device or part and its attachment to the cargo tank wall intact and capable of retaining product.

(c) Each closure for openings, including but not limited to the manhole, filling or inspection openings, and each valve, fitting, pressure relief device, vapor recovery stop valve or lading retaining fitting located in the upper ⅔ of a cargo tank circumference (or cross section perimeter for non-circular tanks) must be protected by being located within or between adjacent rollover damage protection devices, or by being 125 percent of the strength that would be provided by the otherwise required damage protection device.

(1) A rollover damage protection device on a cargo tank motor vehicle must be designed and installed to withstand loads equal to twice the weight of the loaded cargo tank motor vehicle applied as follows: normal to the cargo tank shell (perpendicular to the cargo tank surface); and tangential (perpendicular to the normal load) from any direction. The stresses shall not exceed the ultimate strength of the material of construction. These design loads may be considered to be uniformly distributed and independently applied. If more than one rollover protection device is used, each device must be capable of carrying its proportionate share of the required loads and in each case at least one-fourth the total tangential load. The design must be proven capable of carrying the required loads by calculations, tests or a combination of tests and calculations.

(2) A rollover damage protection device that would otherwise allow the accumulation of liquid on the top of the cargo tank, must be provided with a drain that directs the liquid to a safe point of discharge away from any structural component of the cargo tank motor vehicle.

(d) *Rear-end protection.* Each cargo tank motor vehicle must be provided with a rear-end protection device to

protect the cargo tank and piping in the event of a rear-end collision and reduce the likelihood of damage which could result in the loss of lading. The rear-end tank protection device must conform to the following requirements (Nothing in this paragraph shall be construed to relieve a manufacturer of responsibility for complying with the requirements of § 393.86 of this title):

(1) The rear-end cargo tank protection device must be designed so that it can deflect at least 6 inches horizontally forward with no contact between any part of the cargo tank motor vehicle which contains lading during transit and with any part of the rear-end protection device, or with a vertical plane passing through the outboard surface of the protection device.

(2) The dimensions of the rear-end cargo tank protection device shall conform to the following:

(i) The bottom surface of the rear-end protection device must be at least 4 inches below the lower surface of any part at the rear of the cargo tank motor vehicle which contains lading during transit and not more than 60 inches from the ground when the vehicle is empty.

(ii) The maximum width of a notch, indentation, or separation between sections of a rear-end cargo tank protection device may not exceed 24 inches. A notched, indented, or separated rear-end protection device may be used only when the piping at the rear of the cargo tank is equipped with a sacrificial device outboard of a shut-off valve.

(iii) The widest part of the motor vehicle at the rear may not extend more than 18 inches beyond the outermost ends of the device or (if separated) devices on either side of the vehicle.

(3) The structure of the rear-end protection device and its attachment to the vehicle must be designed to satisfy the conditions specified in paragraph (d)(1) of this section when subjected to an impact of the cargo tank motor vehicle at rated payload, at a deceleration of 2 ''g''. Such impact must be considered as being uniformly applied in the horizontal plane at an angle of 10 degrees or less to the longitudinal axis of the vehicle.

(e) *Longitudinal deceleration protection*. In order to account for stresses due to longitudinal impact in an accident, the cargo tank shell and heads must be able to withstand the load resulting from the design pressure in combination with the dynamic pressure resulting from a longitudinal deceleration of 2 ''g''. For this loading condition, the allowable stress value used may not exceed the ultimate strength of the material of construction using a safety factor of 1.3. Performance testing, analytical methods, or a combination thereof, may be used to prove this capability provided the methods are accurate and verifiable. For cargo tanks with internal baffles, the decelerative force may be reduced by 0.25 ''g'' for each baffle assembly, but in no case may the total reduction in decelerative force exceed 1.0 ''g''.

[Amdt. 178–89, 54 FR 25023, June 12, 1989, as amended at 55 FR 37061, Sept. 7, 1990; Amdt. 178–105, 59 FR 55175, Nov. 3, 1994; Amdt. 178–118, 61 FR 51341, Oct. 1, 1996]

§ 178.345–9 Pumps, piping, hoses and connections.

(a) Suitable means must be provided during loading or unloading operations to ensure that pressure within a cargo tank does not exceed test pressure.

(b) Each hose, piping, stop-valve, lading retention fitting and closure must be designed for a bursting pressure of the greater of 100 psig or four times the MAWP.

(c) Each hose coupling must be designed for a bursting pressure of the greater of 120 psig or 4.8 times the MAWP of the cargo tank, and must be designed so that there will be no leakage when connected.

(d) Suitable provision must be made to allow for and prevent damage due to expansion, contraction, jarring, and vibration. Slip joints may not be used for this purpose in the lading retention system.

(e) Any heating device, when installed, must be so constructed that the breaking of its external connections will not cause leakage of the cargo tank lading.

(f) Any gauging, loading or charging device, including associated valves, must be provided with an adequate means of secure closure to prevent leakage.

(g) The attachment and construction of each loading/unloading or charging line must be of sufficient strength, or be protected by a sacrificial device, such that any load applied by loading/unloading or charging lines connected to the cargo tank cannot cause damage resulting in loss of lading from the cargo tank.

(h) Use of a nonmetallic pipe, valve or connection that is not as strong and heat resistant as the cargo tank material is authorized only if such attachment is located outboard of the lading retention system.

[Amdt. 178–89, 54 FR 25025, June 12, 1989, as amended at 55 FR 37061, Sept. 7, 1990, Amdt. 178–89, 56 FR 27877, June 17, 1991; Amdt. 178–118, 61 FR 51341, Oct. 1, 1996]

§178.345–10 Pressure relief.

(a) Each cargo tank must be equipped to relieve pressure and vacuum conditions in conformance with this section and the applicable individual specification. The pressure and vacuum relief system must be designed to operate and have sufficient capacity to prevent cargo tank rupture or collapse due to over-pressurization or vacuum resulting from loading, unloading, or from heating and cooling of lading.

(b) *Type and construction of relief systems and devices.* (1) Each cargo tank must be provided with a primary pressure relief system consisting of one or more reclosing pressure relief valves. A secondary pressure relief system consisting of another pressure relief valve in parallel with the primary pressure relief system may be used to augment the total venting capacity of the cargo tank. Non-reclosing pressure relief devices are not authorized in any cargo tank except when in series with a reclosing pressure relief device. Gravity actuated reclosing valves are not authorized on any cargo tank.

(2) When provided by §173.33(c)(1)(iii) of this subchapter, cargo tanks may be equipped with a normal vent. Such vents must be set to open at not less than 1 psig and must be designed to prevent loss of lading through the device in case of vehicle overturn.

(3) Each pressure relief system must be designed to withstand dynamic pressure surges in excess of the design set pressure as specified in paragraphs (b)(3) (i) and (ii) of this section. Set pressure is a function of MAWP as set forth in paragraph (d) of this section.

(i) Each pressure relief device must be able to withstand dynamic pressure surge reaching 30 psig above the design set pressure and sustained above the set pressure for at least 60 milliseconds with a total volume of liquid released not exceeding one gallon before the relief device recloses to a leak-tight condition. This requirement must be met regardless of vehicle orientation. This capability must be demonstrated by testing. An acceptable test procedure is outlined in TTMA RP No. 81—''Performance of Spring Loaded Pressure Relief Valves on MC 306, MC 307, and MC 312 Tanks,'' May 24, 1989 edition.

(ii) After August 31, 1995, each pressure relief device must be able to withstand a dynamic pressure surge reaching 30 psig above the design set pressure and sustained above the design set pressure for at least 60 milliseconds with a total volume of liquid released not exceeding one liter before the relief valve recloses to a leak-tight condition. This requirement must be met regardless of vehicle orientation. This capability must be demonstrated by testing. TTMA RP No. 81, cited in paragraph (b)(3)(i) of this section, is an acceptable test procedure.

(4) Each reclosing pressure relief valve must be constructed and installed in such a manner as to prevent unauthorized adjustment of the relief valve setting.

(5) No shut-off valve or other device that could prevent venting through the pressure relief system may be installed in a pressure relief system.

(6) The pressure relief system must be mounted, shielded and drainable so as to minimize the accumulation of material that could impair the operation or discharge capability of the system by freezing, corrosion or blockage.

(c) *Location of relief devices.* Each pressure relief device must communicate with the vapor space above the lading as near as practicable to the center of the vapor space. For example, on a cargo tank designed to operate in a level attitude, the device should be positioned at the horizontal and transverse center of the cargo tank; on

cargo tanks sloped to the rear, the device should be located in the forward half of the cargo tank. The discharge from any device must be unrestricted. Protective devices which deflect the flow of vapor are permissible provided the required vent capacity is maintained.

(d) *Settings of pressure relief system.* The set pressure of the pressure relief system is the pressure at which it starts to open, allowing discharge.

(1) *Primary pressure relief system.* The set pressure of each primary relief valve must be no less than 120 percent of the MAWP, and no more than 132 percent of the MAWP. The valve must reclose at not less than 108 percent of the MAWP and remain closed at lower pressures.

(2) *Secondary pressure relief system.* The set pressure of each pressure relief valve used as a secondary relief device must be not less than 120 percent of the MAWP.

(e) *Venting capacity of pressure relief systems.* The pressure relief system (primary and secondary, including piping) must have sufficient venting capacity to limit the cargo tank internal pressure to not more than the cargo tank test pressure. The total venting capacity, rated at not more than the cargo tank test pressure, must be at least that specified in Table I, except as provided in § 178.348–10(d).

TABLE I.—MINIMUM EMERGENCY VENT CAPACITY

[In cubic feet free air/hour at 60 °F and 1 atm.]

Exposed area in square feet	Cubic feet free air per hour
20	15,800
30	23,700
40	31,600
50	39,500
60	47,400
70	55,300
80	63,300
90	71,200
100	79,100
120	94,900
140	110,700
160	126,500
180	142,300
200	158,100
225	191,300
250	203,100
275	214,300
300	225,100
350	245,700
400	265,000
450	283,200

TABLE I.—MINIMUM EMERGENCY VENT CAPACITY—Continued

[In cubic feet free air/hour at 60 °F and 1 atm.]

Exposed area in square feet	Cubic feet free air per hour
500	300,600
550	317,300
600	333,300
650	348,800
700	363,700
750	378,200
800	392,200
850	405,900
900	419,300
950	432,300
1,000	445,000

Note 1: Interpolate for intermediate sizes.

(1) *Primary pressure relief system.* Unless otherwise specified in the applicable individual specification, the primary relief system must have a minimum venting capacity of 12,000 SCFH per 350 square feet of exposed cargo tank area, but in any case at least one fourth the required total venting capacity for the cargo tank.

(2) *Secondary pressure relief system.* If the primary pressure relief system does not provide the required total venting capacity, additional capacity must be provided by a secondary pressure relief system.

(f) *Certification of pressure relief devices.* The manufacturer of any pressure relief device, including valves, frangible (rupture) disks, vacuum vents and combination devices must certify that the device model was designed and tested in accordance with this section and the appropriate cargo tank specification. The certificate must contain sufficient information to describe the device and its performance. The certificate must be signed by a responsible official of the manufacturer who approved the flow capacity certification.

(g) *Rated flow capacity certification test.* Each pressure relief device model must be successfully flow capacity certification tested prior to first use. Devices having one design, size and set pressure are considered to be one model. The testing requirements are as follows:

(1) At least 3 devices of each specific model must be tested for flow capacity at a pressure not greater than the test

pressure of the cargo tank. For a device model to be certified, the capacities of the devices tested must fall within a range of plus or minus 5 percent of the average for the devices tested.

(2) The rated flow capacity of a device model may not be greater than 90 percent of the average value for the devices tested.

(3) The rated flow capacity derived for each device model must be certified by a responsible official of the device manufacturer.

(h) *Marking of pressure relief devices.* Each pressure relief device must be permanently marked with the following:

(1) Manufacturer's name;

(2) Model number;

(3) Set pressure, in psig; and

(4) Rated flow capacity, in SCFH at the rating pressure, in psig.

[Amdt. 178–89, 54 FR 25025, June 12, 1989, as amended at 55 FR 21038, May 22, 1990; 55 FR 37062, Sept. 7, 1990; Amdt. 178–89, 56 FR 27877, June 17, 1991; Amdt. 178–105, 59 FR 55175, Nov. 3, 1994; Amdt. 178–118, 61 FR 51341, Oct. 1, 1996]

§178.345–11 Tank outlets.

(a) *General.* As used in this section, ''loading/unloading outlet'' means any opening in the cargo tank wall used for loading or unloading of lading, as distinguished from outlets such as manhole covers, vents, vapor recovery devices, and similar closures. Cargo tank outlets, closures and associated piping must be protected in accordance with §178.345–8.

(b) Each cargo tank loading/unloading outlet must be equipped with an internal self-closing stop-valve, or alternatively, with an external stop-valve located as close as practicable to the cargo tank wall. Each cargo tank loading/unloading outlet must be in accordance with the following provisions:

(1) Each loading/unloading outlet must be fitted with a self-closing system capable of closing all such outlets in an emergency within 30 seconds of actuation. During normal operations the outlets may be closed manually. The self-closing system must be designed according to the following:

(i) Each self-closing system must include a remotely actuated means of closure located more than 10 feet from the loading/unloading outlet where vehicle length allows, or on the end of the cargo tank farthest away from the loading/unloading outlet. The actuating mechanism must be corrosion-resistant and effective in all types of environment and weather.

(ii) If the actuating system is accidentally damaged or sheared off during transportation, each loading/unloading outlet must remain securely closed and capable of retaining lading.

(iii) When required by part 173 of this subchapter for materials which are flammable, pyrophoric, oxidizing, or Division 6.1 (poisonous liquid) materials, the remote means of closure must be capable of thermal activation. The means by which the self-closing system is thermally activated must be located as close as practicable to the primary loading/unloading connection and must actuate the system at a temperature not over 250° F. In addition, outlets on these cargo tanks must be capable of being remotely closed manually or mechanically.

(2) Bottom loading outlets which discharge lading into the cargo tank through fixed internal piping above the maximum liquid level of the cargo tank need not be equipped with a self-closing system.

(c) Any loading/unloading outlet extending beyond an internal self-closing stop-valve, or beyond the innermost external stop-valve which is part of a self-closing system, must be fitted with another stop-valve or other leak-tight closure at the end of such connection.

(d) Each cargo tank outlet that is not a loading/unloading outlet must be equipped with a stop-valve or other leak-tight closure located as close as practicable to the cargo tank outlet. Any connection extending beyond this closure must be fitted with another stop-valve or other leak-tight closure at the end of such connection.

[Amdt. 178–89, 56 FR 27877, June 17, 1991, as amended by Amdt. 178–97, 57 FR 45465, Oct. 1, 1992; Amdt. 178–118, 61 FR 51341, Oct. 1, 1996]

§178.345–12 Gauging devices.

Each cargo tank, except a cargo tank intended to be filled by weight, must be equipped with a gauging device that indicates the maximum permitted liquid

level to within 0.5 percent of the nominal capacity as measured by volume or liquid level. Gauge glasses are not permitted.

[Amdt. 178–89, 55 FR 37062, Sept. 7, 1990, as amended by Amdt. 178–118, 61 FR 51342, Oct. 1, 1996]

§ 178.345–13 Pressure and leakage tests.

(a) Each cargo tank must be pressure and leakage tested in accordance with this section and §§ 178.346–13(a), 178.347–13(a) or 178.348–13(a), as applicable.

(b) *Pressure test.* Each cargo tank or cargo tank compartment must be tested hydrostatically or pneumatically. Each cargo tank of a multi-cargo tank motor vehicle must be tested with the adjacent cargo tanks empty and at atmospheric pressure. Each closure, except pressure relief devices and loading/unloading venting devices rated at less than the prescribed test pressure, must be in place during the test. If the venting device is not removed during the test, such device must be rendered inoperative by a clamp, plug or other equally effective restraining device, which may not prevent the detection of leaks, or damage the device. Restraining devices must be removed immediately after the test is completed.

(1) *Hydrostatic method.* Each cargo tank, including its domes, must be filled with water or other liquid having similar viscosity, the temperature of which may not exceed 100 °F. The cargo tank must then be pressurized as prescribed in the applicable specification. The pressure must be gauged at the top of the cargo tank. The prescribed test pressure must be maintained for at least 10 minutes during which time the cargo tank must be inspected for leakage, bulging, or other defect.

(2) *Pneumatic method.* A pneumatic test may be used in place of the hydrostatic test. However, pneumatic pressure testing may involve higher risk than hydrostatic testing. Therefore, suitable safeguards must be provided to protect personnel and facilities should failure occur during the test. The cargo tank must be pressurized with air or an inert gas. Test pressure must be reached gradually by increasing the pressure to one half of test pressure. Thereafter, the pressure must be increased in steps of approximately one tenth of the test pressure until test pressure is reached. Test pressure must be held for at least 5 minutes. The pressure must then be reduced to the inspection pressure which must be maintained while the entire cargo tank surface is inspected for leakage and other sign of defects. The inspection method must consist of coating all joints and fittings with a solution of soap and water or other equally sensitive method.

(c) *Leakage test.* The cargo tank with all its accessories in place and operable must be leak tested at not less than 80 percent of tank's MAWP with the pressure maintained for at least 5 minutes.

(d) Any cargo tank that leaks, bulges or shows any other sign of defect must be rejected. Rejected cargo tanks must be suitably repaired and retested successfully prior to being returned to service. The retest after any repair must use the same method of test under which the cargo tank was originally rejected.

[Amdt. 178–89, 54 FR 25026, June 12, 1989, as amended at 55 FR 37063, Sept. 7, 1990; Amdt. 178–105, 59 FR 55176, Nov. 3, 1994; Amdt. 178–118, 61 FR 51342, Oct. 1, 1996]

§ 178.345–14 Marking.

(a) *General.* The manufacturer shall certify that each cargo tank motor vehicle has been designed, constructed and tested in accordance with the applicable Specification DOT 406, DOT 407 or DOT 412 (§§ 178.345, 178.346, 178.347, 178.348) cargo tank requirements, and when applicable, with the ASME Code. The certification shall be accomplished by marking the cargo tank as prescribed in paragraphs (b) and (c) of this section, and by preparing the certificate prescribed in § 178.345–15. Metal plates prescribed by paragraphs (b), (c), (d) and (e) of this section, must be permanently attached to the cargo tank or its integral supporting structure, by brazing, welding or other suitable means. These plates must be affixed on the left side of the vehicle near the front of the cargo tank (or the frontmost cargo tank of a multi-cargo tank motor vehicle), in a place readily accessible for inspection. The plates must be permanently and plainly

marked in English by stamping, embossing or other means in characters at least 3/16 inch high. The information required by paragraphs (b) and (c) of this section may be combined on one specification plate.

(b) *Nameplate.* Each cargo tank must have a corrosion resistant nameplate permanently attached to it. The following information, in addition to any applicable information required by the ASME Code, must be marked on the tank nameplate (parenthetical abbreviations may be used):

(1) DOT Specification number DOT XXX (DOT XXX), where ''XXX'' is replaced with the applicable specification number.

(2) Original test date, month and year (Orig. Test Date).

(3) Tank maximum allowable working pressure (MAWP) in psig.

(4) Cargo tank test pressure (Test P), in psig.

(5) Cargo tank design temperature range (Design temp. range),____ °F to ____ °F.

(6) Nominal capacity (Water cap.), in gallons.

(7) Maximum design density of lading (Max. lading density), in pounds per gallon.

(8) Material specification number—shell (Shell matl, yyy***), where ''yyy'' is replaced by the alloy designation and ''***'' by the alloy type.

(9) Material specification number—heads (Head matl, yyy***), where ''yyy'' is replaced by the alloy designation and ''***'' by the alloy type.

NOTE .— When the shell and heads materials are the same thickness, they may be combined, (Shell&head matl, yyy***).

(10) Weld material (Weld matl.).

(11) Minimum thickness—shell (Min. shell-thick), in inches. When minimum shell thicknesses are not the same for different areas, show (top __, side __, bottom __, in inches).

(12) Minimum thickness—heads (Min. heads thick.), in inches.

(13) Manufactured thickness—shell (Mfd. shell thick.), top __, side __, bottom __, in inches. (Required when additional thickness is provided for corrosion allowance.)

(14) Manufactured thickness—heads (Mfd. heads thick.), in inches. (Required when additional thickness is provided for corrosion allowance.)

(15) Exposed surface area, in square feet.

(c) *Specification plate.* Each cargo tank motor vehicle must have an additional corrosion resistant metal specification plate attached to it. The specification plate must contain the following information (parenthetical abbreviations may be used):

(1) Cargo tank motor vehicle manufacturer (CTMV mfr.).

(2) Cargo tank motor vehicle certification date (CTMV cert. date), if different from the cargo tank certification date.

(3) Cargo tank manufacturer (CT mfr.).

(4) Cargo tank date of manufacture (CT date of mfr.), month and year.

(5) Maximum weight of lading (Max. payload), in pounds.

(6) Maximum loading rate in gallons per minute (Max. load rate, GPM) at maximum loading pressure ____ psig.

(7) Maximum unloading rate in gallons per minute (Max. unload rate, GPM), at maximum unloading pressure ____ psig.

(8) Lining material (Lining), if applicable.

(9) Heating system design pressure (Heating sys. press.), in psig, if applicable.

(10) Heating system design temperature (Heating sys. temp.), in °F, if applicable.

(d) *Multi-cargo tank motor vehicle.* For a multi-cargo tank motor vehicle having all its cargo tanks not separated by any void, the information required by paragraphs (b) and (c) of this section may be combined on one specification plate. When separated by a void, each cargo tank must have an individual nameplate as required in paragraph (b) of this section, unless all cargo tanks are made by the same manufacturer with the same materials, manufactured thickness, minimum thickness and to the same specification. The cargo tank motor vehicle may have a combined nameplate and specification plate. When only one plate is used, the plate must be visible and not covered by insulation. The required information must be listed on the plate from front

to rear in the order of the corresponding cargo tank location.

(e) *Variable specification cargo tank.* Each variable specification cargo tank must have a corrosion resistant metal variable specification plate attached to it. The mounting of this variable specification plate must be such that only the plate identifying the applicable specification under which the tank is being operated is legible.

(1) The following information must be included (parenthetical abbreviations are authorized):

Specification DOT XXX (DOT XXX), where ''XXX'' is replaced with the applicable specification number.

Equipment required	Required rating[1]
Pressure relief devices:	
Pressure actuated type	_____
Frangible type	_____
Lading discharge devices	_____
Top	_____
Bottom	_____
Pressure unloading fitting	_____
Closures:	
Manhole	_____
Fill openings	_____
Discharge openings	_____

[1] Required rating—to meet the applicable specification.

(2) If no change of information in the specification plate is required, the letters ''NC'' must follow the rating required. If the cargo tank is not so equipped, the word ''None'' must be inserted.

(3) Those parts to be changed or added must be stamped with the appropriate MC or DOT Specification markings.

(4) The alterations that must be made in order for the tank to be modified from one specification to another must be clearly indicated on the manufacturer's certificate and on the variable specification plate.

[Amdt. 178–89, 54 FR 25027, June 12, 1989, as amended at 55 FR 37063, Sept. 7, 1990; Amdt. 178–99, 58 FR 51534, Oct. 1, 1993; Amdt. 178–104, 59 FR 49135, Sept. 26, 1994; Amdt. 178–105, 59 FR 55176, Nov. 3, 1994; 60 FR 17402, Apr. 5, 1995; Amdt. 178–118, 61 FR 51342, Oct. 1, 1996]

§ 178.345–15 Certification.

(a) At or before the time of delivery, the manufacturer of a cargo tank motor vehicle must provide certification documents to the owner of the cargo tank motor vehicle. The registration numbers of the manufacturer, the Design Certifying Engineer, and the Registered Inspector, as appropriate, must appear on the certificates (see subpart F, part 107 in subchapter A of this chapter).

(b) The manufacturer of a cargo tank motor vehicle made to any of these specifications must provide:

(1) For each design type, a certificate signed by a responsible official of the manufacturer and a Design Certifying Engineer certifying that the cargo tank motor vehicle design meets the applicable specification; and

(2) For each ASME cargo tank, a cargo tank manufacturer's data report as required by the ASME Code. For each cargo tank motor vehicle, a certificate signed by a responsible official of the manufacturer and a Registered Inspector certifying that the cargo tank motor vehicle is constructed, tested and completed in conformance with the applicable specification.

(c) The manufacturer of a variable specification cargo tank motor vehicle must provide:

(1) For each design type, a certificate signed by a responsible official of the manufacturer and a Design Certifying Engineer certifying that the cargo tank motor vehicle design meets the applicable specifications; and

(2) For each variable specification cargo tank motor vehicle, a certificate signed by a responsible official of the manufacturer and a Registered Inspector certifying that the cargo tank motor vehicle is constructed, tested and completed in conformance with the applicable specifications. The certificate must include all the information required and marked on the variable specification plate.

(d) In the case of a cargo tank motor vehicle manufactured in two or more stages, each manufacturer who performs a manufacturing operation on the incomplete vehicle or portion thereof shall provide to the succeeding manufacturer, at or before the time of delivery, a certificate covering the particular operation performed by that

manufacturer, including any certificates received from previous manufacturers, Registered Inspectors, and Design Certifying Engineers. Each certificate must indicate the portion of the complete cargo tank motor vehicle represented thereby, such as basic cargo tank fabrication, insulation, jacket, lining, or piping. The final manufacturer shall provide all applicable certificates to the owner.

(e) *Specification shortages.* If a cargo tank is manufactured which does not meet all applicable specification requirements, thereby requiring subsequent manufacturing involving the installation of additional components, parts, appurtenances or accessories, the cargo tank manufacturer may affix the name plate and specification plate, as required by §178.345–14 (b) and (c), without the original date of certification stamped on the specification plate. The manufacturer shall state the specification requirements not complied with on the manufacturer's Certificate of Compliance. When the cargo tank is brought into full compliance with the applicable specification, the Registered Inspector shall stamp the date of compliance on the specification plate. The Registered Inspector shall issue a Certificate of Compliance stating details of the particular operations performed on the cargo tank, and the date and person (manufacturer, carrier, or repair organization) accomplishing the compliance.

[Amdt. 178–89, 55 FR 37063, Sept. 7, 1990, as amended by Amdt. 178–98, 58 FR 33306, June 16, 1993; Amdt. 178–105, 59 FR 55176, Nov. 3, 1994; Amdt. 178–118, 61 FR 51342, Oct. 1, 1996]

§178.346 Specification DOT 406; cargo tank motor vehicle.

§178.346–1 General requirements.

(a) Each Specification DOT 406 cargo tank motor vehicle must meet the general design and construction requirements in §178.345, in addition to the specific requirements contained in this section.

(b) *Maximum Allowable Working Pressure:* The MAWP of each cargo tank must be no lower than 2.65 psig and no higher than 4 psig.

(c) Vacuum loaded cargo tanks must not be constructed to this specification.

(d) Each cargo tank must be ''constructed in accordance with the ASME Code'' except as modified herein:

(1) The record-keeping requirements contained in the ASME Code Section VIII, Division I do not apply. Parts UG–90 thru 94 of Section VIII, Division I do not apply. Inspection and certification must be made by an inspector registered in accordance with subpart F of part 107.

(2) Loadings must be as prescribed in §178.346–3.

(3) The knuckle radius of flanged heads must be at least three times the material thickness, and in no case less than 0.5 inch. Stuffed (inserted) heads may be attached to the shell by a fillet weld. The knuckle radius and dish radius versus diameter limitations of UG–32 do not apply. Shell sections of cargo tanks designed with a non-circular cross section need not be given a preliminary curvature, as prescribed in UG–79(b).

(4) Marking, certification, data reports, and nameplates must be as prescribed in §§178.345–14, 178.346–14, 178.345–15, and 178.346–15.

(5) Manhole closure assemblies must conform to §§178.345–5 and 178.346–5.

(6) Pressure relief devices must be as prescribed in §§178.345–10 and 178.346–10.

(7) The hydrostatic or pneumatic test must be as prescribed in §§178.345–13 and 178.346–13.

(8) The following paragraphs in parts UG and UW of the ASME Code, Section VIII, Division I do not apply: UG–11, UG–12, UG–22(g), UG–32(e), UG–34, UG–35, UG–44, UG–76, UG–77, UG–80, UG–81, UG–96, UG–97, UW–13(b)(2), UW–13.1(f) and the dimensional requirements found in Figure UW–13.1.

(9) Single full fillet lap joints without plug welds may be used for arc or gas welded longitudinal seams without radiographic examination under the following conditions:

(i) For a truck-mounted cargo tank, no more than two such joints may be used on the top half of the tank and no more than two joints may be used on the bottom half. They may not be located farther from the top and bottom

centerline than 16 percent of the shell's circumference.

(ii) For a self-supporting cargo tank, no more than two such joints may be used on the top of the tank. They may not be located farther from the top centerline than 12.5 percent of the shell's circumference.

(iii) *Compliance test.* Two test specimens of the material to be used in the manufacture of a cargo tank must be tested to failure in tension. The test specimens must be of the same thicknesses and joint configuration as the cargo tank, and joined by the same welding procedures. The test specimens may represent all the tanks that are made of the same materials and welding procedures, have the same joint configuration, and are made in the same facility within 6 months after the tests are completed. Before welding, the fit-up of the joints on the test specimens must represent production conditions that would result in the least joint strength. Evidence of joint fit-up and test results must be retained at the manufacturers' facility.

(iv) *Weld joint efficiency.* The lower value of stress at failure attained in the two tensile test specimens shall be used to compute the efficiency of the joint as follows: Determine the failure ratio by dividing the stress at failure by the mechanical properties of the adjacent metal; this value, when multiplied by 0.75, is the design weld joint efficiency.

(10) The requirements of paragraph UW–9(d), of Section VIII, Division 1, ASME Code do not apply.

[Amdt. 178–89, 54 FR 25028, June 12, 1989, as amended at 55 FR 37063, Sept. 7, 1990; Amdt. 178–89, 56 FR 27877, June 17, 1991; Amdt. 178–105, 59 FR 55176, Nov. 3, 1994]

§ 178.346–2 Material and thickness of material.

The type and thickness of material for DOT 406 cargo tank motor vehicles must conform to § 178.345–2 of this part, but may in no case be less than that indicated in Tables I and II below.

TABLE I.—MINIMUM THICKNESS OF HEADS (OR BULKHEADS AND BAFFLES WHEN USED AS TANK REINFORCEMENT) USING MILD STEEL (MS), HIGH STRENGTH LOW ALLOY STEEL (HSLA), AUSTENITIC STAINLESS STEEL (SS) OR ALUMINUM (AL)—EXPRESSED IN DECIMALS OF AN INCH AFTER FORMING

Material	Volume capacity in gallons per inch of length								
	14 or less			Over 14 to 23			Over 23		
	MS	HSLA SS	AL	MS	HSLA SS	AL	MS	HSLA SS	AL
Thickness	.100	.100	.160	.115	.115	.173	.129	.129	.187

TABLE II.—MINIMUM THICKNESS OF SHELL USING MILD STEEL (MS), HIGH STRENGTH LOW ALLOY STEEL (HSLA), AUSTENITIC STAINLESS STEEL (SS) OR ALUMINUM (AL)—EXPRESSED IN DECIMALS OF AN INCH AFTER FORMING [1]

Cargo tank motor vehicle rated capacity (gallons)	MS	SS/HSLA	AL
More than 0 to at least 4,500	0.100	0.100	0.151
More than 4,500 to at least 8,000	0.115	0.100	0.160
More than 8,000 to at least 14,000	0.129	0.129	0.173
More than 14,000	0.143	0.143	0.187

[1] Maximum distance between bulkheads, baffles, or ring stiffeners shall not exceed 60 inches.

[Amdt. 178–89, 54 FR 25028, June 12, 1989, as amended at 55 FR 37064, Sept. 7, 1990; Amdt. 178–105, 59 FR 55176, Nov. 3, 1994]

§ 178.346–3 Pressure relief.

(a) Each cargo tank must be equipped with a pressure relief system in accordance with § 178.345–10 and this section.

(b) *Type and construction.* In addition to the pressure relief devices required in § 178.345–10:

(1) Each cargo tank must be equipped with one or more vacuum relief devices;

(2) When intended for use only for lading meeting the requirements of § 173.33(c)(1)(iii) of this subchapter, the cargo tank may be equipped with a normal vent. Such vents must be set to open at not less than 1 psig and must be designed to prevent loss of lading through the device in case of vehicle upset; and

(3) Notwithstanding the requirements in §178.345–10(b), after August 31, 1996, each pressure relief valve must be able to withstand a dynamic pressure surge reaching 30 psig above the design set pressure and sustained above the set pressure for at least 60 milliseconds with a total volume of liquid released not exceeding one liter before the relief valve recloses to a leak-tight condition. This requirement must be met regardless of vehicle orientation. This capability must be demonstrated by testing. TTMA RP No. 81, cited at §178.345–10(b)(3)(i), is an acceptable test procedure.

(c) *Pressure settings of relief valves.*

(1) Notwithstanding the requirements in §178.345–10(d), the set pressure of each primary relief valve must be not less than 110 percent of the MAWP or 3.3 psig, whichever is greater, and not more than 138 percent of the MAWP. The valve must close at not less than the MAWP and remain closed at lower pressures.

(2) Each vacuum relief device must be set to open at no more than 6 ounces vacuum.

(d) *Venting capacities.* (1) Notwithstanding the requirements in §178.345–10 (e) and (g), the primary pressure relief valve must have a venting capacity of at least 6,000 SCFH, rated at not greater than 125 percent of the tank test pressure and not greater than 3 psig above the MAWP. The venting capacity required in §178.345–10(e) may be rated at these same pressures.

(2) Each vacuum relief system must have sufficient capacity to limit the vacuum to 1 psig.

(3) If pressure loading or unloading devices are provided, the relief system must have adequate vapor and liquid capacity to limit the tank pressure to the cargo tank test pressure at maximum loading or unloading rate. The maximum loading and unloading rates must be included on the metal specification plate.

[Amdt. 178–89, 54 FR 25029, June 12, 1989, as amended at 55 FR 37064, Sept. 7, 1990; Amdt. 178–105, 59 FR 55176, Nov. 3, 1994. Redesignated by Amdt. 178–112, 61 FR 18934, Apr. 29, 1996]

§178.346–4 Outlets.

(a) All outlets on each tank must conform to §178.345–11 and this section.

(b) External self-closing stop-valves are not authorized as an alternative to internal self-closing stop-valves on loading/unloading outlets.

[Amdt. 178–89, 54 FR 25029, June 12, 1989. Redesignated by Amdt. 178–112, 61 FR 18934, Apr. 29, 1996]

§178.346–5 Pressure and leakage tests.

(a) Each cargo tank must be tested in accordance with §178.345–13 and this section.

(b) *Pressure test.* Test pressure must be as follows:

(1) Using the hydrostatic test method, the test pressure must be the greater of 5.0 psig or 1.5 times the cargo tank MAWP.

(2) Using the pneumatic test method, the test pressure must be the greater of 5.0 psig or 1.5 times the cargo tank MAWP, and the inspection pressure must be the cargo tank MAWP.

(c) *Leakage test.* Cargo tanks equipped with vapor collection equipment may be leakage tested in accordance with the Environmental Protection Agency's ''Method 27—Determination of Vapor Tightness of Gasoline Delivery Tank Using Pressure-Vacuum Test,'' as set forth in 40 CFR Part 60, Appendix A. Acceptance criteria are found at 40 CFR 60.501 and 60.601.

[Amdt. 178–89, 54 FR 25029, June 12, 1989, as amended at 55 FR 37064, Sept. 7, 1990; Amdt. 178–105, 59 FR 55176, Nov. 3, 1994. Redesignated by Amdt. 178–112, 61 FR 18934, Apr. 29, 1996]

§178.347 Specification DOT 407; cargo tank motor vehicle.

§178.347–1 General requirements.

(a) Each specification DOT 407 cargo tank motor vehicle must conform to the general design and construction requirements in §178.345 in addition to the specific requirements contained in this section.

(b) Each tank must be of a circular cross-section and have an MAWP of at least 25 psig.

(c) Any cargo tank built to this specification with a MAWP greater than 35 psig and each tank designed to be loaded by vacuum must be ''constructed

and certified in accordance with the ASME Code ''. The external design pressure for a cargo tank loaded by vacuum must be at least 15 psi.

(d) Each cargo tank built to this specification with MAWP of 35 psig or less must be ''constructed in accordance with the ASME Code'' except as modified herein:

(1) The record-keeping requirements contained in the ASME Code, Section VIII, Division I, do not apply. The inspection requirements of parts UG–90 thru 94 do not apply. Inspection and certification must be made by an inspector registered in accordance with subpart F of part 107.

(2) Loadings must be as prescribed in § 178.347–3.

(3) The knuckle radius of flanged heads must be at least three times the material thickness, and in no case less than 0.5 inch. Stuffed (inserted) heads may be attached to the shell by a fillet weld. The knuckle radius and dish radius versus diameter limitations of UG–32 do not apply for cargo tank motor vehicles with a MAWP of 35 psig or less.

(4) Marking, certification, data reports and nameplates must be as prescribed in §§ 178.345–14, 178.347–14, 178.345–15, and 178.347–15.

(5) Manhole closure assemblies must conform to §§ 178.345–5 and 178.347–5.

(6) Pressure relief devices must be as prescribed in §§ 178.345–10 and 178.347–10.

(7) The hydrostatic or pneumatic test must be as prescribed in §§ 178.345–13 and 178.347–13.

(8) The following paragraphs in parts UG and UW of the ASME Code, Section VIII, Division I do not apply: UG–11, UG–12, UG–22(g), UG–32(e), UG–34, UG–35, UG–44, UG–76, UG–77, UG–80, UG–81, UG–96, UG–97, UW–13(b)(2), UW–13.1(f), and the dimensional requirements found in Figure UW–13.1.

[Amdt. 178–89, 54 FR 25029, June 12, 1989, as amended at 55 FR 37064, Sept. 7, 1990; Amdt. 178–89, 56 FR 27877, June 17, 1991]

§ 178.347–2 Material and thickness of material.

(a) The type and thickness of material for DOT 407 specification cargo tanks must conform to § 178.345–2 and this section. In no case may the thickness be less than that indicated in Tables I and II below.

TABLE I.—MINIMUM THICKNESS OF HEADS (OR BULKHEADS AND BAFFLES WHEN USED AS TANK REINFORCEMENT) USING MILD STEEL (MS), HIGH STRENGTH LOW ALLOY STEEL (HSLA), AUSTENITIC STAINLESS STEEL (SS) OR ALUMINUM (AL)—EXPRESSED IN DECIMALS OF AN INCH AFTER FORMING

Volume capacity in gallons per inch	10 or less	Over 10 to 14	Over 14 to 18	Over 18 to 22	Over 22 to 26	Over 26 to 30	Over 30
Thickness (MS)	0.100	0.100	0.115	0.129	0.129	0.143	0.156
Thickness (HSLA)	0.100	0.100	0.115	0.129	0.129	0.143	0.156
Thickness (SS)	0.100	0.100	0.115	0.129	0.129	0.143	0.156
Thickness (AL)	0.160	0.160	0.173	0.187	0.194	0.216	0.237

TABLE II.—MINIMUM THICKNESS OF SHELL USING MILD STEEL (MS), HIGH STRENGTH LOW ALLOY STEEL (HSLA), AUSTENITIC STAINLESS STEEL (SS) OR ALUMINUM (AL)—EXPRESSED IN DECIMALS OF AN INCH AFTER FORMING

Volume capacity in gallons per inch	10 or less	Over 10 to 14	Over 14 to 18	Over 18 to 22	Over 22 to 26	Over 26 to 30	Over 30
Thickness (MS)	0.100	0.100	0.115	0.129	0.129	0.143	0.156
Thickness (HSLA)	0.100	0.100	0.115	0.129	0.129	0.143	0.156
Thickness (SS)	0.100	0.100	0.115	0.129	0.129	0.143	0.156
Thickness (AL)	0.151	0.151	0.160	0.173	0.194	0.216	0.237

(b) [Reserved]

[Amdt. 178–89, 54 FR 25030, June 12, 1989, as amended at 55 FR 37064, Sept. 7, 1990; Amdt. 178–104, 59 FR 49135, Sept. 26, 1994]

§178.347–3 Manhole assemblies.

Each manhole assembly must conform to §178.345–5, except that each manhole assembly must be capable of withstanding internal fluid pressures of 40 psig or test pressure of the tank, whichever is greater.

[Amdt. 178–89, 54 FR 25030, June 12, 1989. Redesignated by Amdt. 178–112, 61 FR 18934, Apr. 29, 1996]

§178.347–4 Pressure relief.

(a) Each cargo tank must be equipped with a pressure and vacuum relief system in accordance with §178.345–10 and this section.

(b) *Type and Construction.* Vacuum relief devices are not required for cargo tanks designed to be loaded by vacuum or built to withstand full vacuum.

(c) *Pressure settings of relief valves.* The setting of pressure relief valves must be in accordance with §178.345–10(d).

(d) *Venting capacities.* (1) The vacuum relief system must limit the vacuum to less than 80 percent of the design vacuum capability of the cargo tank.

(2) If pressure loading or unloading devices are provided, the relief system must have adequate vapor and liquid capacity to limit the tank pressure to the cargo tank test pressure at maximum loading or unloading rate. The maximum loading or unloading rate must be included on the metal specification plate.

[Amdt. 178–89, 54 FR 25030, June 12, 1989, as amended at 55 FR 37064, Sept. 7, 1990. Redesignated by Amdt. 178–112, 61 FR 18934, Apr. 29, 1996]

§178.347–5 Pressure and leakage test.

(a) Each cargo tank must be tested in accordance with §178.345–13 and this section.

(b) *Pressure test.* Test pressure must be as follows:

(1) Using the hydrostatic test method, the test pressure must be at least 40 psig or 1.5 times tank MAWP, whichever is greater.

(2) Using the pneumatic test method, the test pressure must be 40 psig or 1.5 times tank MAWP, whichever is greater, and the inspection pressure is tank MAWP.

[Amdt. 178–89, 54 FR 25030, June 12, 1989. Redesignated by Amdt. 178–112, 61 FR 18934, Apr. 29, 1996]

§178.348 Specification DOT 412; cargo tank motor vehicle.

§178.348–1 General requirements.

(a) Each specification DOT 412 cargo tank motor vehicle must conform to the general design and construction requirements in §178.345 in addition to the specific requirements of this section.

(b) The MAWP of each cargo tank must be at least 5 psig.

(c) The MAWP for each cargo tank designed to be loaded by vacuum must be at least 25 psig internal and 15 psig external.

(d) Each cargo tank having a MAWP greater than 15 psig must be of circular cross-section.

(e) Each cargo tank having a—

(1) MAWP greater than 15 psig must be ''constructed and certified in conformance with the ASME Code''; or

(2) MAWP of 15 psig or less must be ''constructed in accordance with the ASME Code,'' except as modified herein:

(i) The recordkeeping requirements contained in the ASME Code, Section VIII, Division I, do not apply. Parts UG–90 thru 94 of Section VIII, Division I do not apply. Inspection and certification must be made by an inspector registered in accordance with subpart F of part 107.

(ii) Loadings must be as prescribed in §178.348–3.

(iii) The knuckle radius of flanged heads must be at least three times the material thickness, and in no case less than 0.5 inch. Stuffed (inserted) heads may be attached to the shell by a fillet weld. The knuckle radius and dish radius versus diameter limitations of UG–32 do not apply for cargo tank motor vehicles with a MAWP of 15 psig or less. Shell sections of cargo tanks designed with a non-circular cross section need not be given a preliminary curvature, as prescribed in UG–79(b).

(iv) Marking, certification, data reports, and nameplates must be as prescribed in §§ 178.345–14, 178.348–14, 178.345–15, and 178.348–15.

(v) Manhole closure assemblies must conform to §§ 178.345–5 and 178.348–5.

(vi) Pressure relief devices must be as prescribed in §§ 178.345–10 and 178.348–10.

(vii) The hydrostatic or pneumatic test must be as prescribed in §§ 178.345–13 and 178.348–13.

(viii) The following paragraphs in parts UG and UW of the ASME Code, Section VIII, Division I do not apply: UG–11, UG–12, UG–22(g), UG–32(e), UG–34, UG–35, UG–44, UG–76, UG–77, UG–80, UG–81, UG–96, UG–97, UW–13(b)(2), UW–13.1(f), and the dimensional requirements found in Figure UW–13.1.

[Amdt. 178–89, 54 FR 25031, June 12, 1989, as amended at 55 FR 37065, Sept. 7, 1990; Amdt. 178–89, 56 FR 27877, June 17, 1991]

§ 178.348–2 Material and thickness of material.

(a) The type and thickness of material for DOT 412 cargo tanks must conform to § 178.345–2 of this part, but in no case may the thickness be less than that indicated in Tables I and II below.

TABLE I.—MINIMUM THICKNESS OF HEADS (OR BULKHEADS AND BAFFLES WHEN USED AS TANK REINFORCEMENT) USING MILD STEEL (MS), HIGH STRENGTH LOW ALLOY STEEL (HSLA), AUSTENITIC STAINLESS STEEL (SS) OR ALUMINUM (AL)—EXPRESSED IN DECIMALS OF AN INCH AFTER FORMING

Volume capacity (gallons per inch)	10 or less				Over 10 to 14				Over 14 to 18			18 and over		
Lading density at 60 °F in pounds per gallon	10 lbs and less	Over 10 to 13 lbs	Over 13 to 16 lbs	Over 16 lbs	10 lbs and less	Over 10 to 13 lbs	Over 13 to 16 lbs	Over 16 lbs	10 lbs and less	Over 10 to 13 lbs	Over 13 to 16 lbs	10 lbs and less	Over 10 to 13 lbs	Over 13 to 16 lbs
Thickness (inch), steel	.100	.129	.157	.187	.129	.157	.187	.250	.157	.250	.250	.157	.250	.312
Thickness (inch), aluminum	.144	.187	.227	.270	.187	.227	.270	.360	.227	.360	.360	.227	.360	.450

TABLE II.—MINIMUM THICKNESS OF SHELL USING MILD STEEL (MS), HIGH STRENGTH LOW ALLOY STEEL (HSLA) OR AUSTENITIC STAINLESS STEEL (SS) OR ALUMINUM (AL)—EXPRESSED IN DECIMALS OF AN INCH AFTER FORMING

Volume capacity in gallons per inch	10 or less				Over 10 to 14				Over 14 to 18			18 and over		
Lading density at 60 °F in pounds per gallon	10 lbs and less	Over 10 to 13 lbs	Over 13 to 16 lbs	Over 16 lbs	10 lbs and less	Over 10 to 13 lbs	Over 13 to 16 lbs	Over 16 lbs	10 lbs and less	Over 10 to 13 lbs	Over 13 to 16 lbs	10 lbs and less	Over 10 to 13 lbs	Over 13 to 16 lbs
Thickness (steel):														
Distances between heads (and bulkheads baffles and ring stiffeners when used as tank reinforcement):														
36 in. or less	.100	.129	.157	.187	.100	.129	.157	.187	.100	.129	.157	.129	.157	.187
Over 36 in. to 54 inches	.100	.129	.157	.187	.100	.129	.157	.187	.129	.157	.187	.157	.250	.250
Over 54 in. to 60 inches	.100	.129	.157	.187	.129	.157	.187	.250	.157	.250	.250	.187	.250	.312
Thickness (aluminum):														
Distances between heads (and bulkheads baffles and ring stiffeners when used as tank reinforcement):														
36 in. or less	.144	.187	.227	.270	.144	.187	.227	.270	.144	.187	.227	.187	.227	.270
Over 36 in. to 54 inches	.144	.187	.227	.270	.144	.187	.227	.270	.187	.227	.270	.157	.360	.360
Over 54 in. to 60 inches	.144	.187	.227	.270	.187	.227	.270	.360	.227	.360	.360	.270	.360	.450

(b) [Reserved]

[Amdt. 178–89, 54 FR 25031, June 12, 1989; 54 FR 28750, July 7, 1989, as amended at 55 FR 37065, Sept. 7, 1990]

§ 178.348–3 Pumps, piping, hoses and connections.

Each pump and all piping, hoses and connections on each cargo tank motor vehicle must conform to § 178.345–9, except that the use of nonmetallic pipes, valves, or connections are authorized on DOT 412 cargo tanks.

[Amdt. 178–89, 55 FR 37065, Sept. 7, 1990. Redesignated by Amdt. 178–112, 61 FR 18934, Apr. 29, 1996]

§ 178.348–4 Pressure relief.

(a) Each cargo tank must be equipped with a pressure and vacuum relief system in accordance with § 178.345–10 and this section.

(b) *Type and construction.* Vacuum relief devices are not required for cargo tanks designed to be loaded by vacuum or built to withstand full vacuum.

(c) *Pressure settings of relief valves.* The setting of the pressure relief devices must be in accordance with § 178.345–10(d), except as provided in paragraph (d)(3) of this section.

(d) *Venting capacities.* (1) The vacuum relief system must limit the vacuum to less than 80 percent of the design vacuum capability of the cargo tank.

(2) If pressure loading or unloading devices are provided, the pressure relief system must have adequate vapor and liquid capacity to limit tank pressure to the cargo tank test pressure at the maximum loading or unloading rate. The maximum loading and unloading rates must be included on the metal specification plate.

(3) Cargo tanks used in dedicated service for materials classed as corrosive material, with no secondary hazard, may have a total venting capacity which is less than required by § 178.345–10(e). The minimum total venting capacity for these cargo tanks must be determined in accordance with the formula contained in § 178.270–11(d)(3). Use of the approximate values given for the formula in § 178.270–11(d)(3) is acceptable.

[Amdt. 178–89, 54 FR 25032, June 12, 1989, as amended at 55 FR 37065, Sept. 7, 1990; Amdt. 178–104, 59 FR 49135, Sept. 26, 1994. Redesignated by Amdt. 178–112, 61 FR 18934, Apr. 29, 1996]

§ 178.348–5 Pressure and leakage test.

(a) Each cargo tank must be tested in accordance with § 178.345–13 and this section.

(b) Pressure test. Test pressure must be as follows:

(1) Using the hydrostatic test method, the test pressure must be at least 1.5 times MAWP.

(2) Using the pneumatic test method, the test pressure must be at least 1.5 times tank MAWP, and the inspection pressure is tank MAWP.

[Amdt. 178–89, 54 FR 25032, June 12, 1989. Redesignated by Amdt. 178–112, 61 FR 18934, Apr. 29, 1996]

Subpart K—Specifications for Packagings for Class 7 (Radioactive) Materials

§ 178.350 Specification 7A; general packaging, Type A.

(a) Each packaging must meet all applicable requirements of subpart B of Part 173 of this subchapter and be designed and constructed so that it meets the requirements of §§ 173.403, 173.410, 173.412, 173.415 and 173.465 of this subchapter for Type A packaging.

(b) Each Specification 7A packaging must be marked on the outside ''USA DOT 7A Type A'' and ''Radioactive Material.''

[Amdt. 178–109, 60 FR 50336, Sept. 28, 1995; 60 FR 54409, Oct. 23, 1995]

§ 178.352 Specification 6L; metal packaging.

§ 178.352–1 General requirements.

Each packaging must meet the applicable requirements of § 173.24 of this subchapter.

[Amdt. 178–35, 39 FR 45246. Dec. 31, 1974. Redesignated by Amdt. 178–97, 55 FR 52716, Dec. 21, 1990]

§178.352–2 Rated capacity.

(a) Rated capacity as marked (see §178.352–6). Not less than 55 gallons nor more than 110 gallons for the outer steel drum. Not more than 17.74 liters for the inner vessel.

(b) The authorized maximum gross weight of the package is 160 kilograms (350 pounds) for sizes not over 210L (55 gallons) or 220 kilograms (480 pounds) for sizes over 210L (55 gallons) but not over 420L (110 gallons).

[Amdt. 178–1, 33 FR 14934, Oct. 4, 1968, as amended by Amdt. 178–35, 39 FR 45246, Dec. 31, 1974. Redesignated by Amdt. 178–97, 55 FR 52716, Dec. 21, 1990, and amended by Amdt. 178–99, 58 FR 51534, Oct. 1, 1993]

§178.352–3 General construction requirements.

(a) The outer shell must be of straight sided steel, with welded body seams and at least 18-gauge body and bottom head sheets, and 14-gauge removable head sheets (unless there are one or more corrugations in the cover near the periphery, in which case 16-gauge is authorized). The shell may be either a single sheet of steel or may be fabricated by welding together two appropriate lengths of 210L (55-gallon) drums, such as a DOT Specification 6J or 17H, with rolled or swedged in hoops as prescribed for either of those specifications. The head must be convex (crowned), not extending beyond the level of the chime, with a minimum convexity of 1 centimeter (⅜-inch). The inside diameter of the shell must be at least 57 centimeters (22.5 inches).

(b) Inner containment vessel must conform to specification 2R (except that cast iron is not authorized), with a maximum usable inside dimension of 13.3 centimeters (5.25 inches) maximum height of 127 centimeters (50 inches) (with caps in place) and minimum wall thickness of 6 millimeters (0.25 inch).

(c) Inner containment vessel must be fixed within the outer shell by one of the following types of centering devices:

(1) At least 8 steel rod spacers, of at least 6 millimeters (0.25-inch) diameter (for packages of 210 liters (55-gallon) capacity) or 1 centimeter of (0.375-inch) diameter (for packages with greater than 210 liters (55-gallon) capacity) cold rolled steel, welded to the vessel at each end by minimum 5 centimeter (2-inch) continuous weld. Each rod must be welded to the vessel at radial positions not exceeding 45 degrees as not to interfere with closure of the inner vessel. Each spacer rod must extend at least 5.6 centimeters (2.25 inches) beyond the inner vessel at each end, then radially to the wall of the outer drum (to provide a springlike snug fit) and along the entire length of the wall of the outer drum. For a packaging of more than 210 liters (55-gallon) capacity, each spacer rod must be braced by welding a 6 millimeter (0.25-inch) by 5 centimeter (2-inch) steel plate to the spacer rod and the pipe with a continuous weld at each joint, the joints being located approximately half way along the length of the drum. For containers manufactured prior to March 31, 1975, this requirement is effective December 31, 1975.

(2) At least three steel ''spiders,'' not more than 24 inches apart, with each spider having at least four legs. Each leg must be constructed of materials having dimensions not less than those listed in this paragraph, welded by continuous weld at each joint to inner and outer steel bands of at least ¼-inch by 1-inch steel. The inner steel band must be welded to the inner vessel by at least six 2-inch welds on both edges of the band. The outer steel band must be welded to the outer drum by at least six 2-inch welds on both edges of the top outer band, such that the inner vessel is at least 2¼ inches from the top and bottom of the drum. Authorized construction materials are:

(i) 2.5 centimeters (1 inch) by 2.5 centimeters (1 inch) by 6 millimeters (¼-inch) steel angle iron.

(ii) 3 centimeters (1¼ inches) by 3 centimeters (1¼ inches) by 5 millimeters (3/16-inch) steel angle iron.

(iii) 2.5 centimeters (1 inch) schedule 40 steel pipe.

(iv) 1½-inch diameter solid steel rods, with only two such spiders required instead of three.

(3) There must not be less than 2 spacer mechanisms for a packaging of 210 liters (55-gallon) capacity nor less than 3 spacer mechanisms for a packaging greater than 210 liters (55-gallon) capacity. Each spacer mechanism must consist of not less than 6 steel angles,

pipe, or rod radial supports of at least 2.7 square centimeters (0.42 square inch) cross-section. Each radial support must be welded at one end to the containment vessel by a continuous weld or to an inner steel band of at least 6 millimeters (¼-inch) by 2.5 centimeters (1 inch) by a continuous weld at radial positions not exceeding 60 degrees from the center of the package. The inner band, when used, must be welded to the inner containment vessel by at least 6 equally spaced 5 centimeter (2-inch) welds on each edge of the band. The opposite end of the radial support must be welded by a continuous weld to an outer steel band of at least 6 millimeters (¼-inch) by 2.5 centimeters (1 inch). The outer steel band must be welded to the outer shell by at least 6 equally spaced welds on each edge of the top band, such that the inner vessel is fixed at least 5.7 centimeters (2.25 inches) from the top and bottom of the drum. The spacer mechanism must be welded as specified near each end of the containment vessel so as not to interfere with the vessel closure. For a packaging greater than 210L (55-gallon) capacity, the additional spacer mechanism must be located at approximately midpoint along the length of the inner vessel.

(d) The void between the inner containment vessel and the outer shell must be completely filled with bagged or tamped vermiculite (expanded mica), with a density of at least 0.072 g/cc (4.5 pounds per cubic foot). Loose, untamped vermiculite is not authorized.

[Amdt. 178–1, 33 FR 14934, Oct. 4, 1968, as amended by Amdt. 178–35, 39 FR 45246, Dec. 31, 1974; 40 FR 2435, Jan. 13, 1975; 40 FR 44327, Sept. 26, 1975. Redesignated by Amdt. 178–97,55 FR 52716, Dec. 21, 1990]

§ 178.352–4 Welding.

Welding must be of material having a melting point in excess of 800° C (1475° F) (except that for packages constructed prior to March 31, 1975, this temperature may be 540° C (1000° F)), with a joint efficiency of at least 0.85. This requirement applies to welding used in adding spacer rods to comply with § 178.103(3)(c)(1).

[Amdt. 178–35, 39 FR 45246, Dec. 31, 1974. Redesignated by Amdt. 178–97, 55 FR 52716, Dec. 21, 1990]

§ 178.352–5 Closure.

(a) The outer drum closure must be at least a 12-gauge bolted ring with drop forged lugs, one of which is threaded, and having at least a 1.6 centimeter (⅝-inch) diameter steel bolt and a lock nut, or equivalent device.

(b) The closure device must have a means for the attachment of a tamper-proof lock wire and seal, or equivalent.

[Amdt. 178–1, 33 FR 14935, Oct. 4, 1968, as amended by Amdt. 178–35, 39 FR 45246, Dec. 31, 1974. Redesignated by Amdt. 178–97, 55 FR 52716, Dec. 21, 1990]

§ 178.352–6 Markings.

(a) Markings on each container, by die stamping on a metal plate attached to the outside of the outer container by spot welding, or other equally efficient method, in letters and figures of at least one-fourth inch in height, as follows:

(1) ''DOT–6L''.

(2) ''FISSILE RADIOACTIVE MATERIAL.''

(3) Name or symbol of person making the marks specified in paragraph (a) (1) of this section. Symbol, if used, must be registered with the Associate Administrator for Hazardous Materials Safety.

(4) Gauge of metal of the outer steel drum in the thinnest part, rated capacity of the outer steel drum in gallons, and the year of manufacture of the assembled package (e.g., 18–110–68). When the gauge of the metal in the drum wall differs from that in the head, both must be indicated with a slanting line between, and with the gauge of the body indicated first (e.g., 18/16–110–68 for 18-gauge body and 16-gauge head).

(b) [Reserved]

[Order 70, 31 FR 6496, Apr. 29, 1966. Redesignated at 32 FR 5606, Apr. 5, 1967. Redesignated by Amdt. 178–97, 55 FR 52716, Dec. 21, 1990]

EDITORIAL NOTE: For FEDERAL REGISTER citations affecting § 178.352–6, see the List of

CFR Sections Affected in the Finding Aids section of this volume.

§178.354 Specification 6M; metal packaging.

§178.354–1 General requirements.

(a) Each package must meet the applicable requirements of §173.24 of this chapter.

(b) [Reserved]

[Amdt. 178–1, 33 FR 14935, Oct. 4, 1968. Redesignated by Amdt. 178–97, 55 FR 52716, Dec. 21, 1990]

§178.354–2 Rated capacity.

(a) Rated capacity as marked (see §178.104–5). Not less than 10 gallons nor more than 110 gallons for the outer steel drum. Not less than 1.24 liters for the inner containment vessel.

(b) [Reserved]

[Amdt. 178–1, 33 FR 14935, Oct. 4, 1968. Redesignated by Amdt. 178–97, 55 FR 52716, Dec. 21, 1990]

§178.354–3 General construction requirements.

(a) The outer shell must be of straight-sided steel, with welded body seams, and may be either a single sheet of steel, or may be fabricated by welding together two appropriate lengths of drums, such as a DOT Specification 6C or 17C, with each length to contain 3 swedged or rolled rolling hoops as prescribed for either of these specifications. A removable head for a packaging of 210 liters (55 gallons) or larger volume must have one or more corrugations in the cover near the periphery. For a packaging exceeding 57 liters (15 gallons) volume, the head must be crowned (convexed), not extending beyond the level of the chime, with a minimum convexity of 1 centimeter (⅜-inch).

(1) The maximum authorized gross weight, metal thickness, and minimum end insulation thickness for the marked volume is as follows:

Marked capacity		Maximum authorized gross weight		Minimum thickness of uncoated sheets and heads (gauge)	Minimum thickness of end insulation	Centimeters
Gallons not over	Liters	Pounds	Kilograms		Inches	
15	57	160	73	20	1.88	4.7
30	114	480	219	18	3.75	9.5
55	210	640	292	16	3.75	9.5
110	420	640	292	16	3.75	9.5

(2) Each drum must have at least four 1.2 centimeter (0.5-inch) diameter vents near the top, each covered with a weatherproof tape or fusible plug; or equivalent device. A layer of porous refractory fiber may be placed behind the pressure-relief vent holes.

(b) Inner containment vessel must conform to specification 2R or equivalent (cast iron or brass are prohibited), with maximum usable inside diameter of 13.3 centimeters (5.25 inches), minimum usable inside diameter of 10 centimeters (4 inches), and minimum height of 15 centimeters (6 inches).

(c) Inner containment vessel must be fixed within the outer shell by one of the following types of solid centering media, with the sides of the inner vessel protected by at least 9.5 centimeters (3.75 inches) of insulation media, and the ends with at least the thickness as prescribed in §178.104–3(a)(1).

(1) Machined discs and rings made of solid industrial cane fiberboard having a density of at least 0.24 g/cc (15 pounds per cubic foot) fitted such that the radial clearances between the fiberboard, inner vessel, and shell do not exceed 6 millimeters (¼-inch); or

(2) Hardwood or plywood at least 1.2 centimeter (½-inch) thick, having a density of at least 0.45 g/cc (28 pounds per cubic foot). There must be no gap or direct heat path from the shell to the inner vessel.

(d) Any radiation shielding material used must be placed within the inner containment vessel or must be protected in all directions by at least the thickness of the thermal insulating material prescribed in paragraph (a) of this section.

(e) For a packaging having an authorized gross weight in excess of 219 kg (480 pounds), a steel bearing plate, at least 6 millimeters (0.25-inch) thick or a plywood disc, at least 2.5 centimeters (1-inch) thick, and at least 25 centimeters (10 inches) in diameter must be provided at both ends and adjacent to the specification 2R inner containment vessel, to provide additional load-bearing surface against the insulation-centering medium.

[Amdt. 178–1, 33 FR 14935, Oct. 4, 1968, as amended by Amdt. 178–35, 39 FR 45246, Dec. 31, 1974; 40 FR 44327, Sept. 26, 1975. Redesignated by Amdt. 178–97, 55 FR 52716, Dec. 21, 1990]

§ 178.354–4 Closure.

(a) The outer drum closure must be at least 16-gauge bolt-type locking ring having at least a 5/16-inch steel bolt for drum sizes not over 15 gallons, or a 12-gauge bolted ring with drop-forged lugs, one of which is threaded, and a 5/8-inch steel bolt for drum sizes over 15 gallons. Each bolt must be provided with a lock nut or equivalent device.

(b) The closure device must have means for the attachment of a temperproof lock wire and seal, or equivalent.

[Amdt. 178–1, 33 FR 14935, Oct. 4, 1968. Redesignated by Amdt. 178–97, 55 FR 52716, Dec. 21, 1990]

§ 178.354–5 Markings.

(a) Marking must be as prescribed in § 173.24 of this chapter.

(b) Marking on the outside of each package must be as follows: ''DOT–6M Type B,'' ''Radioactive Materials,'' or ''Fissile Radioactive Materials,'' as appropriate; and the gauge of metal of the outer drum in the thinnest part, rated capacity of the outer drum in gallons, and year of manufacture (for example, 18–30–69). When the gauge of the metal in the drum wall differs from that in the head, both must be indicated with a slanting line between, and with the gauge of the body indicated first (e.g., 18/16–55–69 for 18-gauge body and 16-gauge head).

[Amdt. 178–1, 33 FR 14935, Oct. 4, 1968. Redesignated by Amdt. 178–97, 55 FR 52716, Dec. 21, 1990]

§ 178.356 Specification 20PF phenolic-foam insulated, metal overpack.

§ 178.356–1 General requirements.

(a) Each overpack must meet all of the applicable requirements of § 173.24 of this subchapter.

(b) The maximum gross weight of the package, including the inner cylinder and its contents, must not exceed the following:

(1) Specification 20PF–1—138 kilograms (300 pounds).

(2) Specification 20PF–2—320 kilograms (700 pounds).

(3) Specification 20PF–3—455 kilograms (1000 pounds).

(c) The general configuration of the overpack must be a right cylinder, consisting of an insulated base section, a steel liner lid, and an insulated top section. The inner liner and outer shell must be at least 16-gauge and 18-gauge steel, respectively, with the intervening cavity filled with a molded-in-place, fire-resistant, phenolic-foam insulation interspersed with wooden members for bracing and support Wood pieces must be securely attached to both the liner and shell. No hole is permitted in the liner. Each joint between sections must be stepped a minimum of 5 centimeters (2 inches) and gaps between mating surfaces must not exceed 5 millimeters (0.2–inch). Gaps between foam surface of top section and liner lid must not exceed 1 centimeter (0.4–inch) or 5–centimeters (2 inches) where taper is required for mold stripping. For the specification 20PF–1, the top section may consist of a plug of foam insulation and a steel cover. The liner and shell closures must each be gasketed against moisture penetration. The liner must have a bolted flange closure. Shell closure must conform to § 178.118–8(b).

(d) Drawings in CAPE–1662, which include bills of material are a part of this specification.

[Amdt. 178–35, 39 FR 45247, Dec. 31, 1974. Redesignated by Amdt. 178–97, 55 FR 52716, Dec. 21, 1990]

§178.356–2 Materials of construction and other requirements.

(a) Phenolic foam insulation must be fire-resistant and fabricated in accordance with USDOE Material and Equipment Specification SP–9, Rev. 1 and Supplement, which is a part of this specification. (Note: Packagings manufactured under USAEC Specification SP–9 and Rev. 1 thereto are authorized for continued manufacture and use.) A 5.4-inch (13.7 centimeter) minimum thickness of foam must be provided over the entire liner except:

(1) Where wood spacers replace the foam; or

(2) At protrusions of liner or shell, such as flanges, baffles, etc., where minimum insulation thickness is 9 centimeters (3.5 inches); or

(3) Where alternate top section (specification 20PF–1) is used. Foam must not interfere with proper seating of screws in inner liner flange assembly. Average density of insulation must be 0.13 g/cc (8 pounds per cubic foot (pcf)) minimum for bottom section and 0.16 g/cc (10 pcf) minimum for top section, except 0.1 g/cc (6.5 pcf) for the specification 20PF–1 top section.

(b) Gaskets must be as follows:

(1) Inner liner flange—Neoprene rubber of 30 to 60 type A durometer hardness or other equivalent gasket material which is compatible with the specific contents.

(2) Outer shell—Synthetic rubber conforming to MIL–R–6855 (available from the Naval Publications Forms Center, 5801 Tabor Avenue, Philadelphia, Pennsylvania 19120) class 2, grade 60.

(3) Support and pressure pads for inner liner top and bottom must be sponge rubber or equivalent.

(c) Alternate top section (specification 20PF–1 only). Average insulation density must be 0.16 g/cc (10 pcf minimum). Thickness of plug must be 11 centimeters (4.3 inches) minimum, except thickness may be reduced to 10 centimeters (4 inches) to clear bolt heads. A flush mounted top lifting device must be securely fastened to a wood block encapsulated by the foam.

(d) Vent holes 5 millimeters (0.2–inch) diameter must be drilled in the outer shell to provide pressure relief during the insulation foaming and in the event of a fire. These holes, which must be drilled in all areas of the shell which mate with the foam insulation, must be spaced in accordance with CAPE–1662.

(e) Welding must be by a fusion welding process in accordance with American Welding Society Codes B–3.0 and D–1.0. Body seams and joints for the liner or shell must be continuous welds.

(f) Waterproofing. Each screw hole in the outer shell must be sealed with appropriate resin-type sealing material, or equivalent, during installation of the screw. All exposed foam surfaces, including any vent hole, must be sealed with waterproofing material as prescribed in USDOE Material and Equipment Specification SP–9, Rev. 1 and Supplement, or equivalent.

[Amdt. 178–35, 39 FR 45247, Dec. 31, 1974, as amended by Amdt. 178–56, 44 FR 49458, Aug. 23, 1979. Redesignated by Amdt. 178–97, 55 FR 52716, Dec. 21, 1990]

§178.356–3 Tests.

(a) Leakage test—Each inner liner assembly must be tested for leakage prior to installation. Seam welds of the liner must be covered for a distance of at least 15 centimeters (6 inches) on either side of the seam with soapsuds, heavy oil, or equivalent material, and interior air pressure applied to at least 776mm Hg (15 p.s.i.g.) above atmospheric pressure must be held for at least 30 seconds. Liners failing to pass this test may not be used until repairs are made, and retests successfully passed.

(b) [Reserved]

[Amdt. 178–35, 39 FR 45247, Dec. 31, 1974. Redesignated by Amdt. 178–97, 55 FR 52716, Dec. 21, 1990]

§178.356–4 Required markings.

(a) Marking must be as prescribed in §173.24 of this subchapter.

(b) Marking on the outside of each overpack must be as follows:

(1) ''USA–DOT–20PF–1'' or ''–2,'' as appropriate, and if the entire liner is made of stainless steel, additional marking such as ''3041–SS'' to indicate the type of stainless steel used.

(2) ''TARE WT: xxx lbs.'' where xxx is the tare weight of the assembled overpack without the inner container.

(3) Year of manufacture.

[Amdt. 178–35, 39 FR 45247, Dec. 31, 1974. Redesignated by Amdt. 178–97, 55 FR 52716, Dec. 21, 1990]

§ 178.356–5 Typical assembly detail.

(a) Specifications 20PF–1.

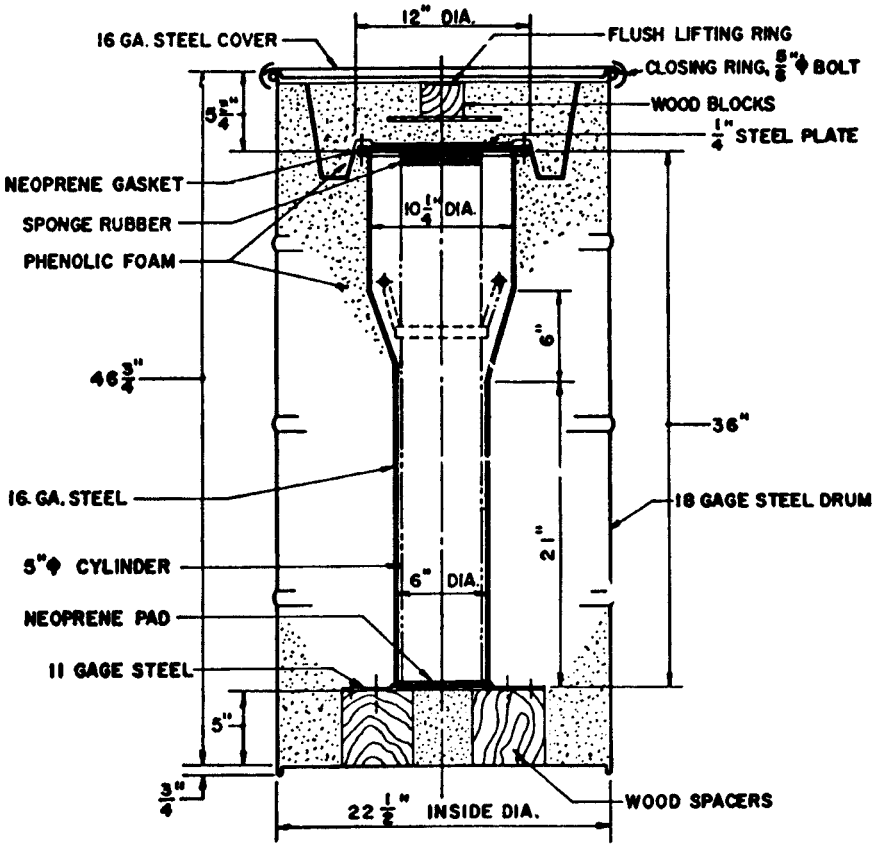

(b) Specification 20PF–2.

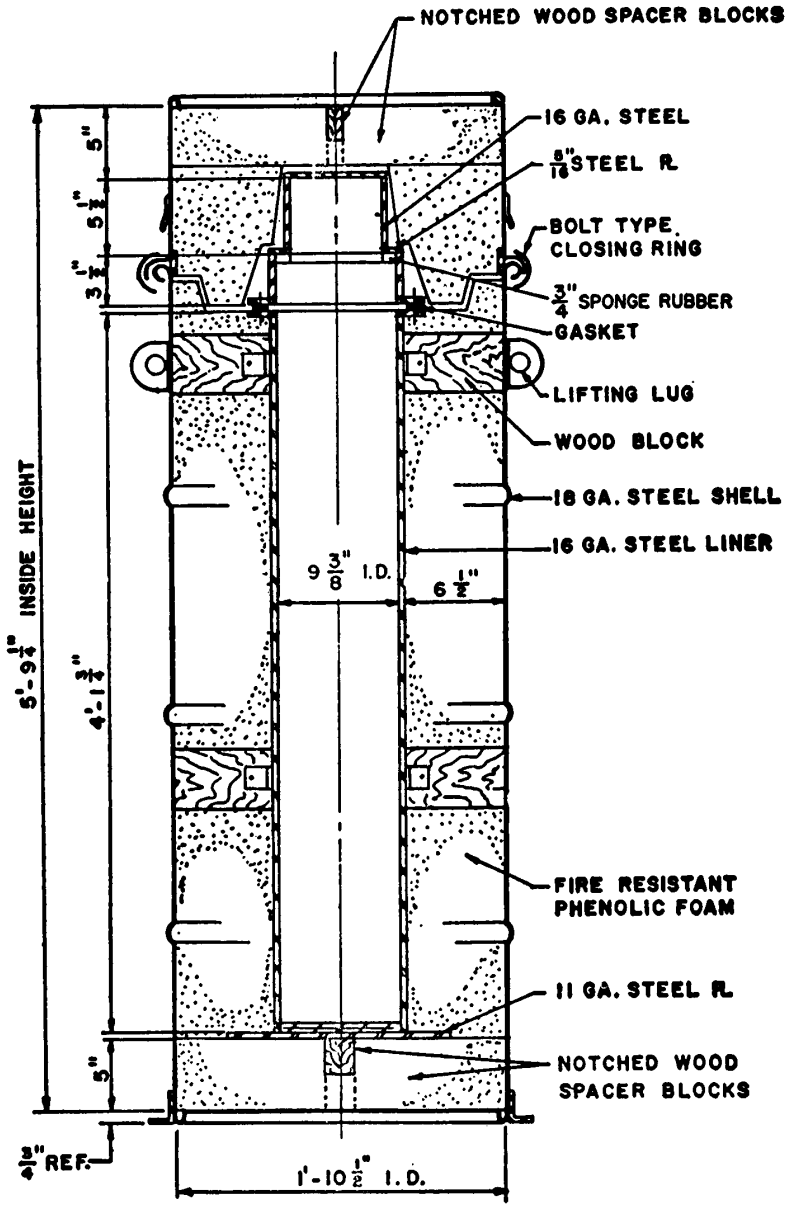

(c) Specification 20PF–3.

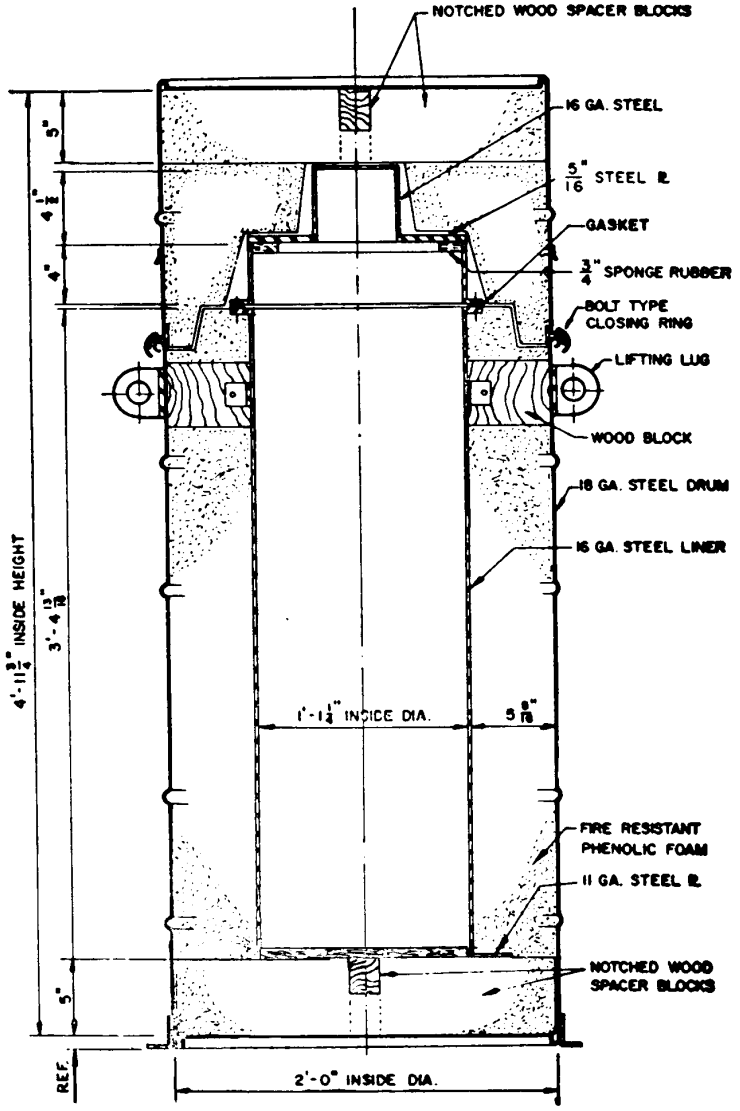

[Amdt. 178–35, 39 FR 45247, Dec. 31, 1974. Redesigntated by Amdt. 178–97, 55 FR 52716, Dec. 21, 1990]

§178.358 Specification 21PF fire and shock resistant, phenolic-foam insulated, metal overpack.

§178.358–1 General requirements.

(a) Each overpack must meet all of the applicable requirements of §§173.24, 173.411, and 173.412 of this subchapter.

(1) Specification 21PF–1 overpacks includes the series of 21PF–1, 21PF–1A, and 21PF–1B models. Details of the three models are included in CAPE–1662, Revision 1 and Supplement 1.

(2) Drawings in CAPE–1662, Revision 1 and Supplement 1, which include bills of materials, and K/SS–471, are a part of this specification.

(b) Each overpack is authorized for use in applications where the maximum gross weight of the package, including the inner container and contents does not exceed 3725 kilograms (8200 pounds), (horizontally-loaded specification 21 PF–1 unit), or 3900 kilograms (8600 pounds), (end-loaded specification 21 PF–2 unit).

(c) The general configuration of the overpack must be a right cylinder, consisting of a steel inner liner (at least 16-gauge) and steel outer shell (at least 14-gauge) with the intervening cavity filled with a molded-in-place, fire-resistant, phenolic foam insulation and interspersed wooden members for bracing and support. Two specific configurations are authorized; a horizontal loading unit (specification 21PF–1) consisting of insulated base and top sections jointed in a longitudinal peripheral closure joint; or an end-loading unit (specification 21PF–2), consisting of an insulated main section, a steel plate liner lid, and an insulated end cap. For either type each joint between sections must be stepped at least 1.8 centimeters (0.75-inch) and gaps between mating surfaces may not exceed 5 millimeters (0.2-inch). Bolted closures, which must each be gasketed against moisture penetration, must be in accordance with CAPE–1662. Each bolt must be equipped with a locking device to prevent loosening from vibration. Outer steel bracing and support framework must be attached to the shell to facilitate normal handling.

(d) Specification 21PF–1 overpacks in use or under construction before April 1, 1989, must be modified to Specification 21PF–1A before April 1, 1991. All new construction to Specification 21PF–1 beginning after March 31, 1989, must meet Specification 21PF–1B. Use of unmodified 21PF–1 overpacks after March 31, 1991, is prohibited.

[Amdt. 178–35, 39 FR 45250, Dec. 31, 1974; 40 FR 2435, Jan. 13, 1975, as amended by Amdt. 178–90, 53 FR 36551, Sept. 20, 1988. Redesigntated by Amdt. 178–97, 55 FR 52716, Dec. 21, 1990]

§178.358–2 Materials of construction and other requirements.

(a) Phenolic foam insulation must be fire resistant and fabricated in accordance with USDOE Material and Equipment Specification SP–9, Rev. 1 and Supplement, which is a part of this specification. (Note: Packagings manufactured under USAEC Specification SP–9, and Rev. 1 thereto are authorized for continued manufacture and use.) A 5.5-inch (14 centimeter) minimum thickness of foam must be provided over the entire liner except where:

(1) Wood spacers replace the foam material; or

(2) At protrusions of liner or shell, such as flanges, baffles, etc., where the minimum thickness of foam, wood, or a combination of these is 10 centimeters (4 inches).

(3) Solid wood or laminated wood solidly glued may be used to replace the foam between liner and shell (i.e., in ends of overpack). In this case, minimum wood thickness is 10 centimeters (4 inches). Average density of insulation must be 0.1g/cc (6.75 pounds per cubic foot (pcf)) minimum, except that 0.13 g/cc (8 pcf) is required in the removable end cap of the specification 21PF–2, which must have a minimum foam thickness of 12.7 centimeters (5 inches).

(b) Gaskets for inner liner, outer shell, or where otherwise specified in CAPE–1662, Revision 1, must be as specified in CAPE–1662, Revision 1.

(c) Support and pressure pads for the inner liner must be of neoprene, sponge rubber, or equivalent.

(d) Fire-retardant (intumescent) paint must be applied to any wood blocking which is located at any joint in the shell.

(e) Vent holes 5 millimeters (0.2-inch) diameter must be drilled in the outer shell to provide pressure relief during

the insulation foaming and in the event of a fire. These holes, which must be drilled in all areas of the shell which made with the foam insulation, must be spaced in accordance with CAPE–1662.

(f) Welding must be by a fusion process in accordance with the American Welding Society Code. Body seams and joints for the liner and shell must be continuous welds.

(g) *Waterproofing.* Each screw hole in the outer shell must be sealed with appropriate resin-type sealing material, or equivalent, during installation of the screw. All exposed foam surfaces, including any vent hole, must be sealed with either:

(1) Waterproofing material as prescribed in USDOE Material and Equipment Specification SP–9, Rev. 1 and Supplement, or

(2) As specified in CAPE–1662, Revision 1.

[Amdt. 178–35, 39 FR 45250, Dec. 31, 1974, as amended by Amdt. 178–56, 44 FR 49459, Aug. 23, 1979; Amdt. 178–90, 53 FR 36551, Sept. 20, 1988. Redesigntated by Amdt. 178–97, 55 FR 52716, Dec. 21, 1990]

§ 178.358–3 Modification of Specification 21PF–1 overpacks.

(a) Each Specification 21PF–1 overpack for which construction began or was completed before April 1, 1989, in conformance with drawing E–S–31536–J, Revision 11, of CAPE–1662 must be modified in conformance with drawing S1E–31536–J1–D of CAPE–1662, Revision 1, Supplement 1, before April 1, 1991.

(b) Each such existing Specification 21PF–1 overpack must be dried and weighed in accordance with the following procedures:

(1) Drill out or otherwise clean the plug material from the vent holes originally provided for foam expansion. See drawing S1E–31536–J1–D of CAPE–1662, Revision 1, Supplement 1, for locations.

(2) Weigh each packaging element (top and bottom halves) separately to an accuracy of +/−5 pounds (+/−2.3 kilograms) and record the weights. If this measured weight is greater than 25 pounds (11.3 Kg) more than the initially measured weight at the time of fabrication (indicating a significant retained water content), the packaging element must be dried.

(3) Place overpack element in drying oven; maintain temperature between 190° and 210°F (87.8–98.9 °C) for a minimum of 72 hours. The oven should have a provision for air exchange or other means of removing moisture driven from the foam structure.

(4) Drying may be discontinued after 72 hours if the weight of the packaging element is not higher than 25 pounds (11.3 Kg) more than the initially measured tare weight of that element at the time of fabrication. If the weight of the packaging element is greater than 25 pounds (11.3 Kg) more than the initial fabricated weight (indicating a significant remaining water content), drying must be continued until the weight differential is not higher than 25 pounds (11.3 Kg), or until the rate of weight loss is less than 2.5 pounds (1.1 Kg) per day.

(5) As an alternate moisture measurement, a calibrated moisture meter reading for 20 percent maximum water content may be used to indicate an end point in the drying cycle (see details in report ''Renovation of DOT Specification 21PF–1 Protective Shipping Packages,'' Report No. K–2057, Revision 1, November 21, 1986, available from the USDOE and part of USDOE Report No. K/SS–471).

(6) Following drying, each overpack element (top and bottom halves) must be weighed and the weight in both pounds and kilograms must be engraved on the identification plate required by § 178.121–5(c).

(c) After modification as provided for herein, each Specification 21PF–1 overpack must be marked ''USA–DOT–21PF–1A''. See the marking requirements of § 178.121–5(b).

[Amdt. 178–90, 53 FR 36551, Sept. 20, 1988. Redesigntated by Amdt. 178–97, 55 FR 52716, Dec. 21, 1990; Amdt. 178–110, 60 FR 49111, Sept. 21, 1995]

§ 178.358–4 Construction of Specification 21PF–1B overpacks.

(a) Each Specification 21PF–1 overpack for which construction began after March 31, 1989, must meet the requirements of Specification 21PF–1B, in conformance with drawings E–S–

31536–J–P, and S1E–31536–J2–B of CAPE–1662, Revision 1, Supplement 1.

(b) With the exception of the closure nuts and bolts, all metal parts of the Specification 21PF–1B must be of stainless steel as shown on the drawings referred to in paragraph (a) of this section.

[Amdt. 178–90, 53 FR 36551, Sept. 20, 1988. Redesigntated by Amdt. 178–97, 55 FR 52716, Dec. 21, 1990]

§178.358–5 Required markings.

(a) Markings must be as prescribed in §173.24 of this subchapter.

(b) Specification marking on the outside of each overpack must be as follows: ''USA–DOT–21PF–1'', ''1A'', ''1B'', or ''2'', as appropriate.

(1) For Specifications 21PF–1 and 21PF–2 only, if the inner shell is constructed of stainless steel, additional marking such as ''304L–SS'' are to be marked on the outside of the overpack to indicate the type of stainless steel used.

(2) For Specification 21PF–1 and 21PF–2 only, ''TARE WT: * * * lbs. (* * * kg)'' where * * * is the tare weight in pounds and kilograms, respectively, of the assembled overpack without the inner product container.

(3) For Specification 21PF–1A and 21PF–1B only: ''TARE WT. of Cover: * * * lbs (* * * kg) TARE WT. of BOTTOM: * * * lbs (* * * kg)'' where * * * is the tare weight in pounds and kilograms, respectively, of the separate halves of the overpack without the inner product container. For Specification 21PF–1A overpacks, the previous tare weight must be changed to reflect the modified tare weight value or must be covered or removed.

(4) Year of manufacture followed by the year of modification, if applicable.

(5) The name or symbol of maker or party certifying compliance with specification requirements. A symbol, if used, must be registered with the Associate Administrator for Hazardous Materials Safety.

(c) For Specification 21PF–1A and –1B only, the markings required by this section must be affixed to each overpack by inscription upon a metal identification plate 11 inches wide X 15 inches long (28 cm X 38 cm), fabricated of 16 to 20 gauge stainless steel sheet, ASTM A–240, Type 304L.

[Amdt. 178–90, 53 FR 36552, Sept. 20, 1988. Redesigntated by Amdt. 178–97, 55 FR 52716, Dec. 21, 1990, and amended at Amdt. 178–97, 56 FR 66287, Dec. 20, 1991]

§178.358–6 Typical assembly detail.

(a) Specification 21PF–1 (horizontal loading overpack).

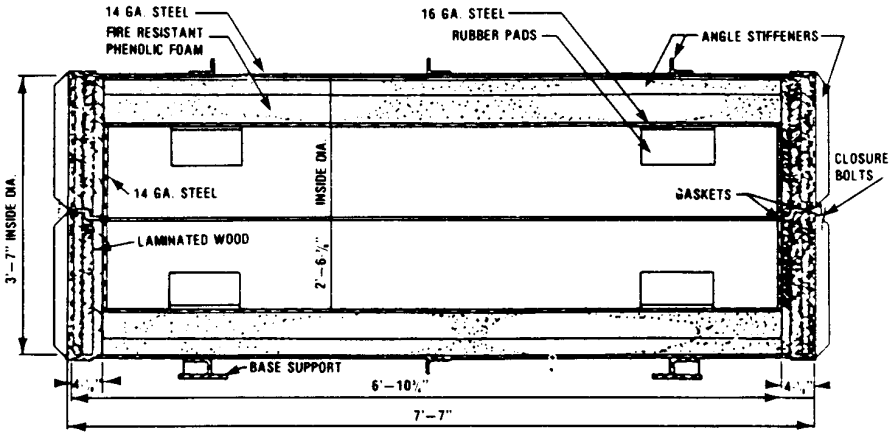

(b) Specification 21PF–1A and 21PF–1B (horizontal loading overpack).

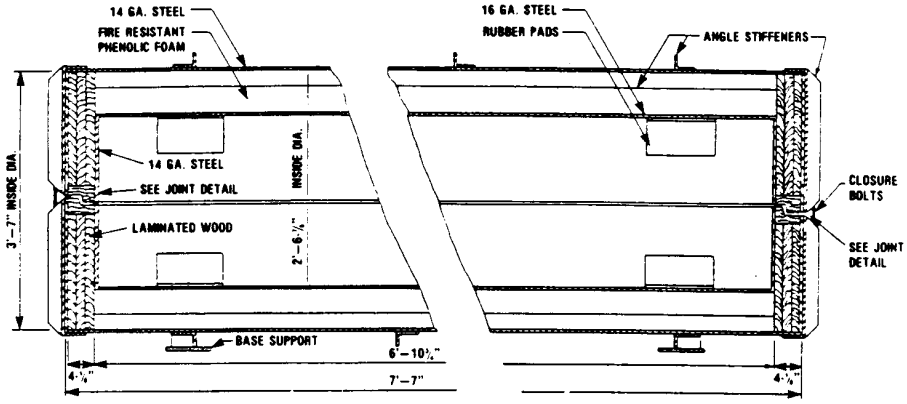

SECTION
DOT SPECIFICATION 21PF-1A
OVERPACK

SECTION
DOT SPECIFICATION 21PF-1B
OVERPACK

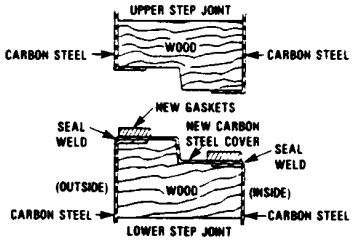

JOINT DETAIL
DOT SPECIFICATION 21PF-1A
OVERPACK

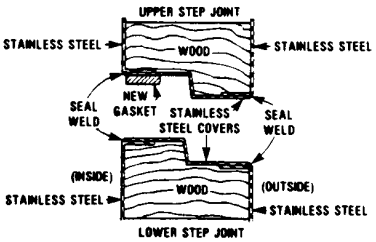

JOINT DETAIL
DOT SPECIFICATION 21PF-1B
OVERPACK

(c) Specification 21PF–2 (end loading overpack).

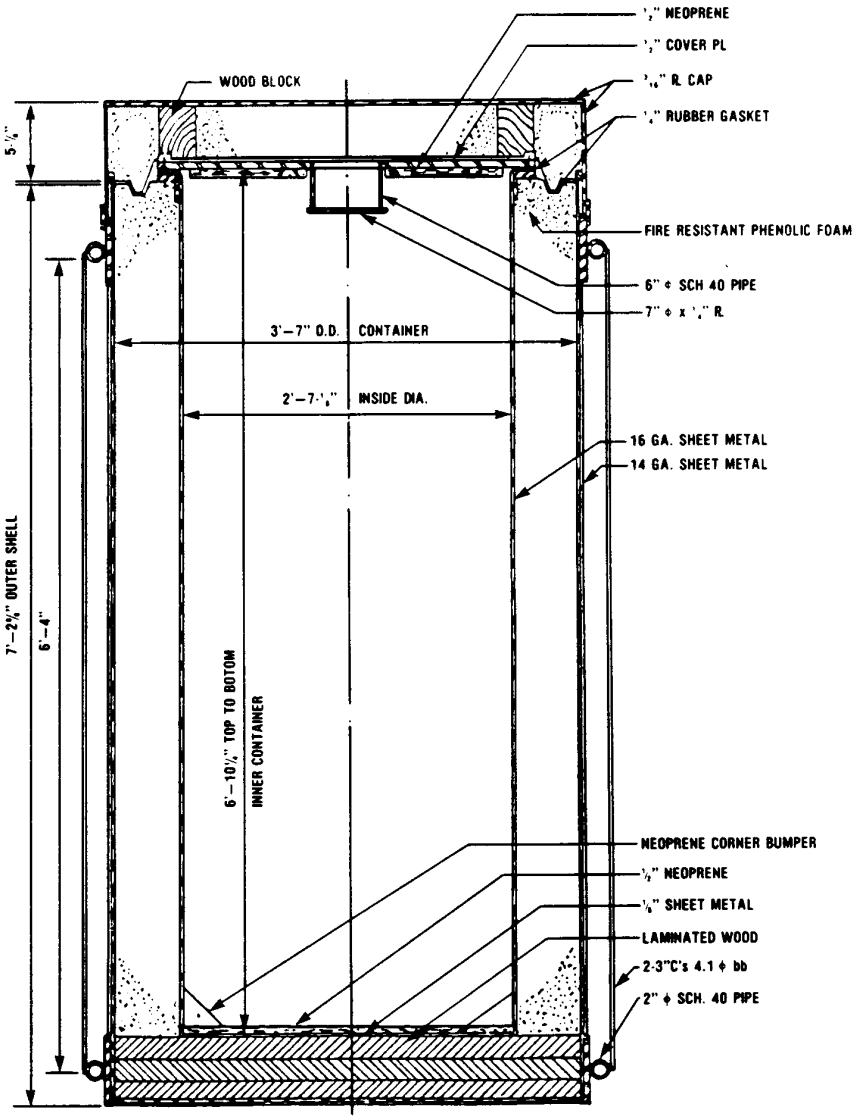

[Amdt. 178–90, 53 FR 36552, Sept. 20, 1988. Redesigntated by Amdt. 178–97, 55 FR 52716, Dec. 21, 1990]

§ 178.360 Specification 2R; inside containment vessel.

§ 178.360–1 General requirements.

(a) Each vessel must be made of stainless steel, malleable iron, or brass, or other material having equivalent physical strength and fire resistance.

(b) Each vessel must meet all of the applicable requirements of § 173.24 (c) and (d) of this subchapter. Letters and numerals at least 6 millimeters (¼-inch) in height are authorized for the marking of a vessel not exceeding 5 centimeters (2 inches) inside diameter.

[Amdt. 178–35, 39 FR 45245, Dec. 31, 1974. Redesignated by Amdt. 178–97, 55 FR 52716, Dec. 21, 1990]

§ 178.360–2 Manufacture.

The ends of the vessel must be fitted with screw-type closures or flanges (see § 178.34–4), except that one or both ends of the vessel may be permanently closed by a welded or brazed plate. Welded or brazed side seams are authorized.

[Amdt. 178–35, 39 FR 45245, Dec. 31, 1974. Redesignated by Amdt. 178–97, 55 FR 52716, Dec. 21, 1990]

§ 178.360–3 Dimensions.

(a) The inside diameter of the vessel may not exceed 30 centimeters (12 inches) exclusive of flanges for handling or fastening devices and must have wall thickness and length in accordance with the following:

Inside diameter maximum		Threaded closure		Wall thickness minimum—Flanged closure	Length maximum	
Inches	Centimeters	Inches	Millimeters		Inches	Centimeters
2	5	3/32	2.5	Not less than that prescribed for schedule 40 pipe	16	41
6	15	⅛	3.2		72	183
12	30	¼	6.5		72	183

(b) [Reserved]

[Amdt. 178–35, 39 FR 45245, Dec. 31, 1974. Redesignated by Amdt. 178–97, 55 FR 52716, Dec. 21, 1990]

§ 178.360–4 Closure devices.

(a) Each closure device must be as follows:

(1) Screw-type cap or plug; number of threads per inch must not be less than United States standard pipe threads and must have sufficient length of thread to engage at least 5 threads when securely tightened. Pipe threads must be luted with an appropriate nonhardening compound which must be capable of withstanding up to 149° C (300° F) without loss of efficiency. Tightening torque must be adequate to maintain leak tightness with the specific luting compound.

(2) An opening may be closed by a securely bolted flange and leak-tight gasket. Each flange must be welded or brazed to the body of the 2R vessel per (ANSI) Standard B16.5 or (AWWA) Standard C207–55, section 10. A torque wrench must be used in securing the flange with a corresponding torque of no more than twice the force necessary to seal the selected gasket. Gasket material must be capable of withstanding up to 149° C (300° F) without loss of efficiency. The flange, whether of ferrous or nonferrous metal, must be constructed from the same metal as the vessel and must meet the dimensional and fabrication specifications for welded construction as follows:

(i) Pipe flanges described in Tables 13, 14, 16, 17, 19, 20, 22, 23, 25 and 26 of ANSI B16.5.

(ii) For nominal pipe sizes, 6, 8, 10, and 12 inches, AWWA Standard C207–55, Table 1, class B, may be used in place of the tables prescribed by paragraph (a)(2)(i) of this section.

(iii) Sizes under 6 inches, nominal pipe size, the following table with the same configuration as illustrated in AWWA C207–55, Table 1, class B, may be used in place of paragraph (a)(2)(i) of this section.

Nominal pipe size		Flange O.D.		Number of bolts	Bolt circle diameter		Diameter of bolts		Flange thickness	
Inches	Centimeters	Inches	Centimeters		Inches	Centimeters	Inches	Centimeters	Inches	Centimeters
2	5	6	15	4	4¾	11.8	½	1.2	⅝	1.6
2½	6.2	7	17.5	4	5½	13.8	½	.....	⅝	.....
3	7.5	7½	18.8	4	6	15	½	.....	⅝	.....
3½	8.8	8½	21.3	8	7	17.5	½	.....	⅝	.....
4	10	9	22.5	8	7½	18.8	½	.....	⅝	.....
5	12.6	10	25.4	8	8½	21.3	½	.....	⅝	.....

(iv) Cast iron flanges prohibited.

(b) [Reserved]

[Amdt. 178–35, 39 FR 45245, Dec. 31, 1974; 40 FR 2435, Jan. 13, 1975, as amended at 40 FR 44327, Sept. 26, 1975. Redesignated by Amdt. 178–97, 56 FR 66284, Dec. 20, 1991]

§178.362 Specification 20WC wooden protective jacket.

§178.362–1 General requirements.

(a) Each jacket must meet the applicable requirements of §173.24 of this subchapter.

(b) Maximum gross weight of the jacket plus the contents may not exceed the following:

(1) Specification 20WC–1: 225 kilograms (500 pounds).

(2) Specification 20WC–2: 225 kilograms (500 pounds).

(3) Specification 20WC–3: 455 kilograms (1000 pounds).

(4) Specification 20WC–4: 910 kilograms (2000 pounds).

(5) Specification 20WC–5: 1820 kilograms (4000 pounds).

(6) Specification 20WC–6: 2230 kilograms (6000 pounds).

[Amdt. 178–35, 39 FR 45252, Dec. 31, 1974. Redesignated by Amdt. 178–97, 55 FR 52716, Dec. 21, 1990]

§178.362–2 Materials of construction.

(a) The general configuration of the wooden protective jacket must be a hollow cylindrical shell constructed of one-piece discs and rings of plywood or solid hardwood reinforced with steel rods.

(1) The specification 20WC–2 must be additionally completely encased, snugly fit, within an 18-gauge steel shell. The steel shell must be provided with at least four 6 millimeter (0.25-inch) diameter vent holes. Each hole must be covered with durable weatherproof tape, or equivalent device.

(2) The specification 20WC–6 jacket must be additionally completely encased, snugly-fit, within a 12-gauge steel shell. The steel shell must be provided with at least twelve 1.2 centimeters (0.5-inch) diameter vent holes, located in 3 rows of 4 holes each, spaced at 90 degree intervals near the top, middle, and bottom of the drum. Each hole must be covered with durable weatherproof tape, or equivalent device.

(b) Plywood must be exterior-grade, void-free, Douglas fir (or equivalent) not more than 2.5 centimeters (1 inch) thick. Solid hardwood is authorized for specification 20WC–2 only.

(c) Discs and rings must be glued together with a strong, shock-resistant adhesive, such as either of the following:

(1) A resorcinol-formaldehyde adhesive, which has been bonded under both heat and pressure; or

(2) A polyvinyl-acetate emulsion, which has been reinforced with cement-coated nails. The nails must be randomly spaced and must be at least 2.5 times as long as the minimum thickness of the plywood discs or rings.

(d) Full-length steel rods are required for reinforcement and lid closure.

(1) The minimum number of rods and the minimum rod diameter are as shown in the following table:

Specification	Minimum number or rods	Minimum rod diameter	
		Inches	Millimeters
20WC–1	6	0.25	6.0
20WC–2	6	.25	6.0
20WC–3	12	.375	9.5
20WC–4	16	.375	9.5
20WC–5	16	.50	12.0
20WC–6	16	.50	12.0

(2) For specifications 20WC–1 and 20WC–2, steel rods must be equally spaced around the circumference to the rings and discs, midway between the

O.D. and I.D. of the rings. For specifications 20WC–3 and 20WC–4, bolts may be staggered alternately in two rows, at ±1.2 centimeters (0.5-inch) from the line midway between the O.D. and I.D. of the rings. For specifications 20WC–5 and 20WC–6, bolts may be staggered alternately in two rows at ±2.5 centimeters (1 inch) from the line midway between the O.D. and I.D. of the rings.

(3) Rod ends must be threaded and secured with lock nuts and steel washers, or equivalent device, to provide at least a 2.5 centimeters (1 inch) diameter bearing surface on each end. Ends of the rods must terminate 1.4 centimeters (0.75-inch) below the surface of the plywood for specifications 20WC–1 and 20WC–2. For specifications 20WC–3, 20WC–4, 20WC–5 and 20WC–6, the ends of the rods must terminate 3.7 centimeters (1.5 inches) below the surface of the plywood, and that portion of each end disc which extends beyond the rod ends must be further held in place with lag screws at least 10 centimeters (4 inches) long.

(e) Thickness of wooden shell:

(1) Specification 20WC–1: At least 10 centimeters (4 inches) thick.

(2) Specification 20WC–2: At least 7.5 centimeters (3 inches) thick.

(3) Specification 20WC–3: At least 13 centimeters (5 inches) thick for the jacket wall, and at least 15 centimeters (6 inches) thick for the end discs. In addition, at least 3 plywood chines, 5 centimeters (2 inches) wide and protruding 5 centimeters (2 inches) beyond the outer surfaces, must be located at each end and midway along the length of the jacket.

(4) Specification 20WC–4: At least 15 centimeters (6 inches) thick for the jacket wall, and at least 15 centimeters (6 inches) thick for the end discs. In addition, at least 3 plywood chines, 5 centimeters (2 inches) wide and protruding 5 centimeters (2 inches) beyond the outer surfaces, must be located at each end and midway along the length of the jacket.

(5) Specifications 20WC–5 and 20WC–6: At least 15 centimeters (6 inches) thick for the jacket wall, and at least 20 centimeters (8 inches) thick for the end discs. In addition, at least 5 plywood chimes, 5 centimeters (2 inches) wide and protruding 5 centimeters (2 inches) beyond the outer surfaces, must be located at each end and equally spaced along the length of the jacket.

[Amdt. 178–35, 39 FR 45252, Dec. 31, 1974. Redesignated by Amdt. 178–97, 55 FR 52716, Dec. 21, 1990, and amended by Amdt. 178–99, 58 FR 51534, Oct. 1, 1993]

§ 178.362–3 Closure.

(a) Closure for the wooden protective jacket is provided by the steel reinforcing rods. The end cap (lid) must fit tightly to the body of the jacket to prevent a heat path to the inside of the jacket. The lid joint for specifications 20WC–3, 20WC–4, 20WC–5, and 20WC–6, may not be coplanar with the end of the inner containment vessel.

(b) Specifications 20WC–2 and 20WC–6. Locking ring closure, if used, must conform to § 178.104–4. Flanged closure, if used, must have at least 8 steel bolts (at least 6 millimeters (0.25-inch) diameter for 20WC–2 or 1.2 centimeters (0.50-inch) diameter for 20WC–6) and lock nuts (or equivalent device), spaced not more than 13 centimeters (5 inches) between centers.

[Amdt. 178–35, 39 FR 45252, Dec. 31, 1974. Redesignated by Amdt. 178–97, 55 FR 52716, Dec. 21, 1990]

§ 178.362–4 Tests.

Prior to each use, each jacket must be visually inspected for defects such as improper bonding, cracking, corrosion of steel rods, and improperly fitting closure lid, or other manufacturing defects. Particular attention must be given to any separation of the plywood discs and rings which would provide a heat path to the inside of the jacket.

[Amdt. 178–35, 39 FR 45252, Dec. 31, 1974. Redesignated by Amdt. 178–97, 55 FR 52716, Dec. 21, 1990]

§ 178.362–5 Painting.

Each jacket (other than 20WC–2 and 20WC–6) must be completely painted with a high quality exterior weather resistant paint.

[Amdt. 178–35, 39 FR 45252, Dec. 31, 1974. Redesignated by Amdt. 178–97, 55 FR 52716, Dec. 21, 1990]

§178.362–6 Marking.

(a) Each jacket must be marked on the external surface as follows: ''USA–DOT 20WC–( ) TYPE B.'' The appropriate numeral must be inserted in the marking to indicate the appropriate specification 20WC category: e.g., ''20WC–2.''

(b) Each jacket must also be marked with the name or symbol of person making the marks specified in paragraph (a) of this section. Symbol, if used, must be registered with the Associate Administrator for Hazardous Materials Safety.

[Amdt. 178–35, 39 FR 45252, Dec. 31, 1974, as amended by Amdt. 178–40, 41 FR 38182, Sept. 9, 1976. Redesignated by Amdt. 178–97, 55 FR 52716, Dec. 21, 1990, and amended at Amdt. 178–97, 56 FR 66287, Dec. 20, 1991]

§178.362–7 Typical assembly sketches.

(a) Spec. 20WC–2.

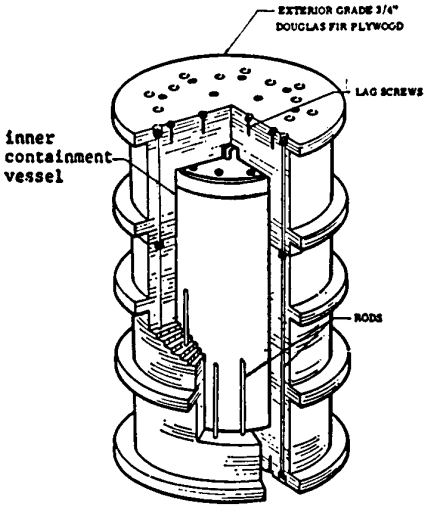

(b) Spec. 20WC–5.

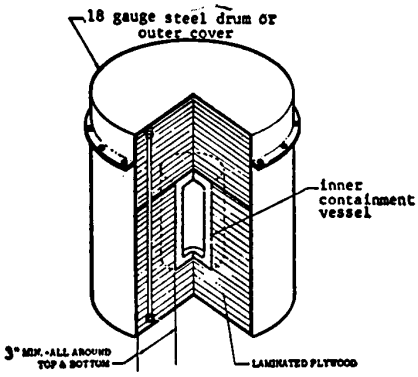

[Amdt. 178–35, 39 FR 45253, Dec. 31, 1974; 40 FR 2435, Jan. 13, 1975. Redesignated by Amdt. 178–97, 55 FR 52716, Dec. 21, 1990]

§178.364 Specification 21WC wooden–steel protective overpack.

§178.364–1 General requirements.

(a) Each jacket must meet all the applicable requirements of §173.24 of this subchapter.

(b) The maximum authorized gross weight of the overpack, including its inner container and contents may not exceed 1360 kilograms (3000 pounds).

[Amdt. 178–35, 39 FR 45253, Dec. 31, 1974. Redesignated by Amdt. 178–97, 55 FR 52716, Dec. 21, 1990]

§178.364–2 Materials of construction and other requirements.

(a) The general configuration of the protective overpack must be a combination of two nested plywood boxes, each 2.5 centimeters (1 inch) thick, nested within a third wooden box of nominal 5 centimeters (2-inch) thickness solid hardwood. The three nested boxes must be enclosed within a welded framework 10 cement-coated nails spaced on nominally 1 centimeter (⅜-inch) thick by 8–10 centimeters (3–4 inches) wide. All outer surfaces of each box must be coated with intumescent paint.

(b) Plywood must be exterior-grade, void-free, Douglas fir, or equivalent, at least 2.5 centimeters (1 inch) thick.

Solid hardwood must be maple, or equivalent.

(c) All box joints and interior surfaces must be glued with a strong, shock-resistant adhesive such as polyvinylacetate emulsion, or equivalent.

(d) All hardwood joints must be mitered, or equivalent, reinforced with No. 10 cement-coated nails space on nominal 15 centimeters (6-inch) centers.

(e) All plywood joints must be butt-type, or equivalent, reinforced with No. 10 cement-coated nails spaced on nominal 15 centimeters (6-inch) centers.

(f) The angles and strapping of the metal frame must be spaced such that separation distances do not exceed 15 centimeters (6 inches).

(g) The lid must be of the same material as the box and fabricated in such a manner that closure forms a mitered joint with the hardwood box and 2 stepped-joints with the plywood boxes.

[Amdt. 178–35, 39 FR 45253, Dec. 31, 1974. Redesigntated by Amdt. 178–97, 55 FR 52716, Dec. 21, 1990]

§ 178.364–3 Closure.

Closure for the protective overpack must be provided by at least 4 mild steel hinges formed from minimum 2.5-centimeter (1-inch) x 5-millimeter (3/16-inch) bar stock. Hinge pins must be minimum 6-millimeter (1/4-inch) diameter by 13.3 centimeters (5 1/4 inches) long mild steel rod drilled at both ends for cotter pins.

[Amdt. 178–35, 39 FR 45253, Dec. 31, 1974. Redesigntated by Amdt. 178–97, 55 FR 52716, Dec. 21, 1990]

§ 178.364–4 Tests.

Prior to each use, each overpack must be visually inspected for defects such as wood checking or splintering weld cracking, corrosion of steel parts, improper joint bonding, or improperly fitting closure lid.

[Amdt. 178–35, 39 FR 45253, Dec. 31, 1974. Redesigntated by Amdt. 178–97, 55 FR 52716, Dec. 21, 1990]

§ 178.364–5 Required marking.

(a) Marking must be as prescribed in § 173.24 of this subchapter.

(b) Marking on the outside of each overpack must include the following:

(1) ''USA–DOT 21WC'' and ''TYPE B'' as appropriate.

(2) [Reserved]

[Amdt. 178–35, 39 FR 45253, Dec. 31, 1974. Redesigntated by Amdt. 178–97, 55 FR 52716, Dec. 21, 1990]

§ 178.364–6 Typical assembly detail.

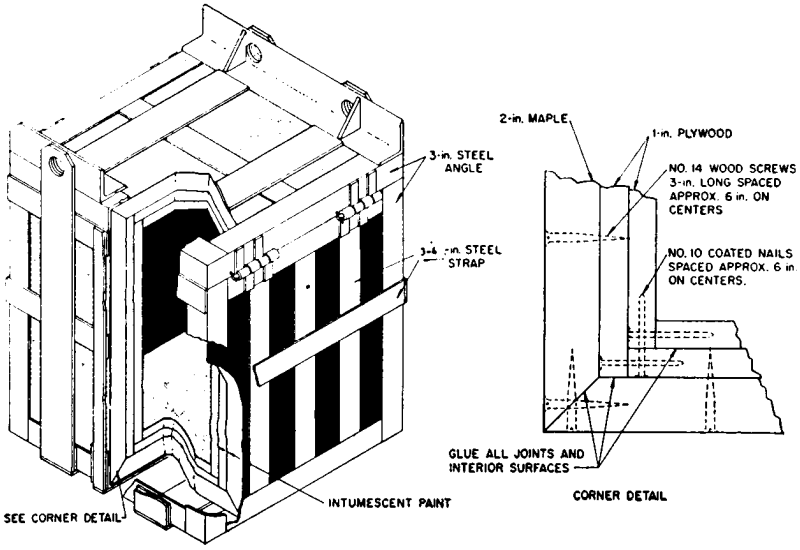

RADIOISOTOPES SHIPPING CASK FIRE AND IMPACT SHIELD

[Amdt. 178–35, 39 FR 45253, Dec. 31, 1974; 40 FR 2435, Jan. 31, 1975. Redesigntated by Amdt. 178–97, 55 FR 52716, Dec. 21, 1990]

Subpart L—Non-bulk Performance-oriented Packaging Standards

SOURCE: Amdt. 178–97, 55 FR 52717, Dec. 21, 1990, unless otherwise noted.

§ 178.500 Purpose, scope and definitions.

(a) This subpart prescribes certain requirements for non-bulk packagings for hazardous materials. Standards for these packagings are based on the UN Recommendations.

(b) Terms used in this subpart are defined in § 171.8 of this subchapter.

§ 178.502 Identification codes for packagings.

(a) Identification codes for designating kinds of packagings consist of the following:

(1) A numeral indicating the kind of packaging, as follows:

(i) ''1'' means a drum.

(ii) ''2'' means a wooden barrel.

(iii) ''3'' means a jerrican.

(iv) ''4'' means a box.

(v) ''5'' means a bag.

(vi) ''6'' means a composite packaging.

(vii) ''7'' means a pressure receptacle.

(2) A capital letter indicating the material of construction, as follows:

(i) ''A'' means steel (all types and surface treatments).

(ii) ''B'' means aluminum.

(iii) ''C'' means natural wood.

(iv) ''D'' means plywood.

(v) ''F'' means reconstituted wood.

(vi) ''G'' means fiberboard.

(vii) ''H'' means plastic.

(viii) ''L'' means textile.

(ix) ''M'' means paper, multi-wall.

(x) ''N'' means metal (other than steel or aluminum).

(xi) ''P'' means glass, porcelain or stoneware.

(3) A numeral indicating the category of packaging within the kind to which the packaging belongs. For example, for steel drums (''1A''), ''1'' indicates a non-removable head drum (i.e., ''1A1'') and ''2'' indicates a removable head drum (i.e., ''1A2'').

(b) For composite packagings, two capital letters are used in sequence in the second position of the code, the first indicating the material of the inner receptacle and the second, that of the outer packaging. For example, a plastic receptacle in a steel drum is designated ''6HA1''.

(c) For combination packagings, only the code number for the outer packaging is used.

(d) Identification codes are set forth in the standards for packagings in §§ 178.504 through 178.523 of this subpart.

[Amdt. 178–97, 55 FR 52717, Dec. 21, 1990, as amended by Amdt. 178–106, 59 FR 67519, Dec. 29, 1994]

§ 178.503 Marking of packagings.

(a) A manufacturer must mark every packaging that is represented as manufactured to meet a UN standard with the marks specified in this section. The markings must be durable, legible and placed in a location and of such a size relative to the packaging as to be readily visible, as specified in § 178.3(a). Except as otherwise provided in this section, every reusable packaging liable to undergo a reconditioning process which might obliterate the packaging marks must bear the marks specified in paragraphs (a)(1) through (a)(6) and (a)(9) of this section in a permanent form (e.g. embossed) able to withstand the reconditioning process. A marking may be applied in a single line or in multiple lines provided the correct sequence is used. As illustrated by the examples in paragraph (e) of this section, the following information must be presented in the correct sequence. Slash marks should be used to separate this information. A packaging conforming to a UN standard must be marked as follows:

(1) The United Nations symbol as illustrated in paragraph (e)(1) of this section (for embossed metal receptacles, the letters UN may be applied in place of the symbol);

(2) A packaging identification code designating the type of packaging, the material of construction and, when appropriate, the category of packaging under §§ 178.504 through 178.523 of this subpart within the type to which the packaging belongs. The letter ''V'' must follow the packaging identification code on packagings tested in accordance with § 178.601(g)(2); for example, ''4GV''. The letter ''W'' must follow the packaging identification code on packagings when required by an approval under the provisions of § 178.601(h) of this part;

(3) A letter identifying the performance standard under which the packaging design type has been successfully tested, as follows:

(i) X—for packagings meeting Packing Group I, II and III tests;

(ii) Y—for packagings meeting Packing Group II and III tests; or

(iii) Z—for packagings only meeting Packing Group III tests;

(4) A designation of the specific gravity or mass for which the packaging design type has been tested, as follows:

(i) For packagings without inner packagings intended to contain liquids, the designation shall be the specific gravity rounded down to the first decimal but may be omitted when the specific gravity does not exceed 1.2; and

(ii) For packagings intended to contain solids or inner packagings, the designation shall be the maximum gross mass in kilograms;

(5)(i) For single and composite packagings intended to contain liquids, the test pressure in kilopascals rounded down to the nearest 10 kPa of the hydrostatic pressure test that the packaging design type has successfully passed;

(ii) For packagings intended to contain solids or inner packagings, the letter ''S'';

(6) The last two digits of the year of manufacture. Packagings of types 1H and 3H shall also be marked with the month of manufacture in any appropriate manner; this may be marked on the packaging in a different place from the remainder of the markings;

(7) The state authorizing allocation of the mark. The letters 'USA' indicate that the packaging is manufactured and marked in the United States in compliance with the provisions of this subchapter;

(8) The name and address or symbol of the manufacturer or the approval agency certifying compliance with subpart L and subpart M of this part. Symbols, if used, must be registered

with the Associate Administrator for Hazardous Materials Safety;

(9) For metal or plastic drums or jerricans intended for reuse or reconditioning as single packagings or the outer packagings of a composite packaging, the thickness of the packaging material, expressed in millimeters (rounded to the nearest 0.1 mm), as follows:

(i) Metal drums or jerricans must be marked with the nominal thickness of the metal used in the body. The marked nominal thickness must not exceed the minimum thickness of the steel used by more than the thickness tolerance stated in ISO Standard 3574. (See Appendix C of this part.) The unit of measure is not required to be marked. When the nominal thickness of either head of a metal drum is thinner than that of the body, the nominal thickness of the top head, body, and bottom head must be marked (eg., ''1.0–1.2–1.0'' or ''0.9–1.0–1.0'').

(ii) Plastic drums or jerricans must be marked with the minimum thickness of the packaging material. Minimum thicknesses of plastic must be as determined in accordance with § 173.28(b)(4). The unit of measure is not required to be marked;

(10) In addition to the markings prescribed in paragraphs (a)(1) through (a)(9) of this section, every new metal drum having a capacity greater than 100 L must bear the marks described in paragraphs (a)(1) through (a)(6), and (a)(9)(i) of this section, in a permanent form, on the bottom. The markings on the top head or side of these packagings need not be permanent, and need not include the thickness mark described in paragraph (a)(9) of this section. This marking indicates a drum's characteristics at the time it was manufactured, and the information in paragraphs (a)(1) through (a)(6) of this section that is marked on the top head or side must be the same as the information in paragraphs (a)(1) through (a)(6) of this section permanently marked by the original manufacturer on the bottom of the drum; and

(11) Rated capacity of the packaging expressed in liters may be marked.

(b) For a packaging with a removable head, the markings may not be applied only to the removable head.

(c) *Marking of reconditioned packagings.* (1) If a packaging is reconditioned, it shall be marked by the reconditioner near the marks required in paragraphs (a)(1) through (6) of this section with the following additional information:

(i) The name of the country in which the reconditioning was performed (in the United States, use the letters ''USA'');

(ii) The name and address or symbol of the reconditioner. Symbols, if used, must be registered with the Associate Administrator for Hazardous Materials Safety;

(iii) The last two digits of the year of reconditioning;

(iv) The letter ''R''; and

(v) For every packaging successfully passing a leakproofness test, the additional letter ''L''.

(2) When, after reconditioning, the markings required by paragraph (a)(1) through (a)(5) of this section no longer appear on the top head or the side of the metal drum, the reconditioner must apply them in a durable form followed by the markings in paragraph (c)(1) of this section. These markings may identify a different performance capability than that for which the original design type had been tested and marked, but may not identify a greater performance capability. The markings applied in accordance with this paragraph may be different from those which are permanently marked on the bottom of a drum in accordance with paragraph (a)(10) of this section.

(d) *Marking of remanufactured packagings.* For remanufactured metal drums, if there is no change to the packaging type and no replacement or removal of integral structural components, the required markings need not be permanent (e.g., embossed). Every other remanufactured drum must bear the marks required in paragraphs (a)(1) through (a)(6) of this section in a permanent form (e.g., embossed) on the top head or side. If the metal thickness marking required in paragraph (a)(9)(i) of this section does not appear on the bottom of the drum, or if it is no longer valid, the remanufacturer also

must mark this information in permanent form.

(e) The following are examples of symbols and required markings:

(1) The United Nations symbol is:

(2) Examples of markings for a new packaging are as follows:

(i) For a fiberboard box designed to contain an inner packaging:

4G/Y145/S/83

USA/RA

(as in § 178.503 (a)(1) through (a)(9) of this subpart).

(ii) For a steel drum designed to contain liquids:

1A1/Y1.4/150/83

USA/VL824

1.0

(as in § 178.503 (a)(1) through (a)(10) of this subpart).

(iii) For a steel drum to transport solids or inner packagings:

1A2/Y150/S/83

USA/VL825

(as in § 178.503 (a)(1) through (a)(8) of this subpart).

(3) Examples of markings for reconditioned packagings are as follows:

1A1/Y1.4/150/92
USA/RB/93 RL

(as in § 178.503(c) (1), (2), (3), (4), and (5)).

[Amdt. 178–97, 55 FR 52717, Dec. 21, 1990, as amended at 56 FR 66284, Dec. 20, 1991; Amdt. 178–102, 59 FR 28493, June 2, 1994; Amdt. 178–106, 59 FR 67520, 67521, Dec. 29, 1994; Amdt. 178–107, 60 FR 26806, May 18, 1995; 62 FR 51561, Oct. 1, 1997]

§ 178.504 Standards for steel drums.

(a) The following are identification codes for steel drums:

(1) 1A1 for a non-removable head steel drum; and

(2) 1A2 for a removable head steel drum.

(b) Construction requirements for steel drums are as follows:

(1) Body and heads must be constructed of steel sheet of suitable type and adequate thickness in relation to the capacity and intended use of the drum. Minimum thickness and marking requirements in §§ 173.28(b)(4) and 178.503(a)(9) of this subchapter apply to drums intended for reuse.

(2) Body seams must be welded on drums designed to contain more than 40 L (11 gallons) of liquids. Body seams must be mechanically seamed or welded on drums intended to contain only solids or 40 L (11 gallons) or less of liquids.

(3) Chimes must be mechanically seamed or welded. Separate reinforcing rings may be applied.

(4) The body of a drum of a capacity greater than 60 L (16 gallons) may have

at least two expanded rolling hoops or two separate rolling hoops. If there are separate rolling hoops, they must be fitted tightly on the body and so secured that they cannot shift. Rolling hoops may not be spot-welded.

(5) Openings for filling, emptying and venting in the bodies or heads of non-removable head (1A1) drums may not exceed 7.0 cm (3 inches) in diameter. Drums with larger openings are considered to be of the removable head type (1A2). Closures for openings in the bodies and heads of drums must be so designed and applied that they will remain secure and leakproof under normal conditions of transport. Closure flanges may be mechanically seamed or welded in place. Gaskets or other sealing elements must be used with closures unless the closure is inherently leakproof.

(6) Closure devices for removable head drums must be so designed and applied that they will remain secure and drums will remain leakproof under normal conditions of transport. Gaskets or other sealing elements must be used with all removable heads.

(7) If materials used for body, heads, closures, and fittings are not in themselves compatible with the contents to be transported, suitable internal protective coatings or treatments must be applied. These coatings or treatments must retain their protective properties under normal conditions of transport.

(8) Maximum capacity of drum: 450 L (119 gallons).

(9) Maximum net mass: 400 kg (882 pounds).

[Amdt. 178–97, 55 FR 52717, Dec. 21, 1990, as amended at 56 FR 66284, Dec. 20, 1991; Amdt. 178–110, 60 FR 49111, Sept. 21, 1995]

§178.505 Standards for aluminum drums.

(a) The following are the identification codes for aluminum drums:

(1) 1B1 for a non-removable head aluminum drum; and

(2) 1B2 for a removable head aluminum drum.

(b) Construction requirements for aluminum drums are as follows:

(1) Body and heads must be constructed of aluminum at least 99 percent pure or an aluminum base alloy. Material must be of suitable type and adequate thickness in relation to the capacity and the intended use of the drum. Minimum thickness and marking requirements in §§173.28(b)(4) and 178.503(a)(9) of this subchapter apply to drums intended for reuse.

(2) All seams must be welded. Chime seams, if any, must be reinforced by the application of separate reinforcing rings.

(3) The body of a drum of a capacity greater than 60 L (16 gallons) may have at least two expanded rolling hoops or two separate rolling hoops. If there are separate rolling hoops, the hoops must be fitted tightly on the body and so secured that they cannot shift. Rolling hoops may not be spot-welded.

(4) Openings for filling, emptying, or venting in the bodies or heads of non-removable head (1B1) drums may not exceed 7.0 cm (3 inches) in diameter. Drums with larger openings are considered to be of the removable head type (1B2). Closures for openings in the bodies and heads of drums must be so designed and applied that they will remain secure and leakproof under normal conditions of transport. Closure flanges may be welded in place so that the weld provides a leakproof seam. Gaskets or other sealing elements must be used with closures unless the closure is inherently leakproof.

(5) Closure devices for removable head drums must be so designed and applied that they remain secure and drums remain leakproof under normal conditions of transport. Gaskets or other sealing elements must be used with all removable heads.

(6) Maximum capacity of drum: 450 L (119 gallons).

(7) Maximum net mass: 400 kg (882 pounds).

[Amdt. 178–97, 55 FR 52717, Dec. 21, 1990, as amended at 56 FR 66284, Dec. 20, 1991; Amdt. 178–102, 59 FR 28494, June 2, 1994]

§178.506 Standards for metal drums other than steel or aluminum.

(a) The following are the identification codes for metal drums other than steel or aluminum:

(1) 1N1 for a non-removable head metal drum; and

(2) 1N2 for a removable head metal drum.

(b) Construction requirements for metal drums other than steel or aluminum are as follows:

(1) Body and heads must be constructed of metal (other than steel or aluminum) of suitable type and adequate thickness in relation to the capacity and the intended use of the drum. Minimum thickness and marking requirements in §§173.28(b)(4) and 178.503(a)(9) of this subchapter apply to drums intended for reuse.

(2) All seams must be welded. Chime seams, if any, must be reinforced by the application of separate reinforcing rings.

(3) The body of a drum of a capacity greater than 60 L (16 gallons) may have at least two expanded rolling hoops or two separate rolling hoops. If there are separate rolling hoops, the hoops must be fitted tightly on the body and so secured that they cannot shift. Rolling hoops may not be spot-welded.

(4) Openings for filling, emptying, or venting in the bodies or heads of non-removable head (1N1) drums may not exceed 7.0 cm (3 inches) in diameter. Drums with larger openings are considered to be of the removable head type (1N2). Closures for openings in the bodies and heads of drums must be so designed and applied that they will remain secure and leakproof under normal conditions of transport. Closure flanges may be welded in place so that the weld provides a leakproof seam. Gaskets or other sealing elements must be used with closures unless the closure is inherently leakproof.

(5) Closure devices for removable head drums must be so designed and applied that they remain secure and drums remain leakproof under normal conditions of transport. Gaskets or other sealing elements must be used with all removable heads.

(6) Maximum capacity of drum: 450 L (119 gallons).

(7) Maximum net mass: 400 kg (882 pounds).

[Amdt. 178–97, 55 FR 52717, Dec. 21, 1990, as amended at 56 FR 66285, Dec. 20, 1991; Amdt. 178–102, 59 FR 28494, June 2, 1994]

§ 178.507 Standards for plywood drums.

(a) The identification code for a plywood drum is 1D.

(b) Construction requirements for plywood drums are as follows:

(1) The wood used must be well-seasoned, commercially dry and free from any defect likely to lessen the effectiveness of the drum for the purpose intended. A material other than plywood, of at least equivalent strength and durability, may be used for the manufacture of the heads.

(2) At least two-ply plywood must be used for the body and at least three-ply plywood for the heads; the plies must be firmly glued together, with their grains crosswise.

(3) The body and heads of the drum and their joints must be of a design appropriate to the capacity of the drum and its intended use.

(4) In order to prevent sifting of the contents, lids must be lined with kraft paper or some other equivalent material which must be securely fastened to the lid and extend to the outside along its full circumference.

(5) Maximum capacity of drum: 250 L (66 gallons).

(6) Maximum net mass: 400 kg (882 pounds).

[Amdt. 178–97, 55 FR 52717, Dec. 21, 1990, as amended at 57 FR 45465, Oct. 1, 1992]

§ 178.508 Standards for fiber drums.

(a) The identification code for a fiber drum is 1G.

(b) Construction requirements for fiber drums are as follows:

(1) The body of the drum must be constructed of multiple plies of heavy paper or fiberboard (without corrugations) firmly glued or laminated together and may include one or more protective layers of bitumen, waxed kraft paper, metal foil, plastic material, or similar materials.

(2) Heads must be of natural wood, fiberboard, metal, plywood, plastics, or other suitable material and may include one or more protective layers of bitumen, waxed kraft paper, metal foil, plastic material, or similar material.

(3) The body and heads of the drum and their joints must be of a design appropriate to the capacity and intended use of the drum.

(4) The assembled packaging must be sufficiently water-resistant so as not to delaminate under normal conditions of transport.

(5) Maximum capacity of drum: 450 L (119 gallons).

(6) Maximum net mass: 400 kg (882 pounds).

[Amdt. 178–97, 55 FR 52717, Dec. 21, 1990, as amended by Amdt. 178–106, 59 FR 67521, Dec. 29, 1994]

§ 178.509 Standards for plastic drums and jerricans.

(a) The following are identification codes for plastic drums and jerricans:

(1) 1H1 for a non-removable head plastic drum;

(2) 1H2 for a removable head plastic drum;

(3) 3H1 for a non-removable head jerrican; and

(4) 3H2 for a removable head jerrican.

(b) Construction requirements for plastic drums and jerricans are as follows:

(1) The packaging must be manufactured from suitable plastic material and be of adequate strength in relation to its capacity and intended use. No used material other than production residues or regrind from the same manufacturing process may be used. The packaging must be adequately resistant to aging and to degradation caused either by the substance contained or by ultra-violet radiation. Any permeation of the substance contained may not constitute a danger under normal conditions of transport.

(2) If protection against ultra-violet radiation is required, it must be provided by the addition of carbon black or other suitable pigments or inhibitors. These additives must be compatible with the contents and remain effective throughout the life of the packaging. Where use is made of carbon black, pigments or inhibitors other than those used in the manufacture of the design type, retesting may be omitted if the carbon black content does not exceed 2 percent by mass or if the pigment content does not exceed 3 percent by mass; the content of inhibitors of ultra-violet radiation is not limited.

(3) Additives serving purposes other than protection against ultra-violet radiation may be included in the composition of the plastic material provided they do not adversely affect the chemical and physical properties of the packaging material.

(4) The wall thickness at every point of the packaging must be appropriate to its capacity and its intended use, taking into account the stresses to which each point is liable to be exposed. Minimum thickness and marking requirements in §§ 173.28(b)(4) and 178.503(a)(9) of this subchapter apply to drums intended for reuse.

(5) Openings for filling, emptying and venting in the bodies or heads of non-removable head (1H1) drums and jerricans (3H1) may not exceed 7.0 cm (3 inches) in diameter. Drums and jerricans with larger openings are considered to be of the removable head type (1H2 and 3H2). Closures for openings in the bodies or heads of drums and jerricans must be so designed and applied that they remain secure and leakproof under normal conditions of transport. Gaskets or other sealing elements must be used with closures unless the closure is inherently leakproof.

(6) Closure devices for removable head drums and jerricans must be so designed and applied that they remain secure and leakproof under normal conditions of transport. Gaskets must be used with all removable heads unless the drum or jerrican design is such that when the removable head is properly secured, the drum or jerrican is inherently leakproof.

(7) Maximum capacity of drums and jerricans: 1H1, 1H2: 450 L (119 gallons); 3H1, 3H2: 60 L (16 gallons).

(8) Maximum net mass: 1H1, 1H2: 400 kg (882 pounds); 3H1, 3H2: 120 kg (265 pounds).

[Amdt. 178–97, 55 FR 52717, Dec. 21, 1990, as amended by Amdt. 178–102, 59 FR 28494, June 2, 1994]

§ 178.510 Standards for wooden barrels.

(a) The following are identification codes for wooden barrels:

(1) 2C1 for a bung type wooden barrel; and

(2) 2C2 for a slack type (removable head) wooden barrel.

(b) Construction requirements for wooden barrels are as follows:

(1) The wood used must be of good quality, straight-grained, well-seasoned and free from knots, bark, rotten wood, sapwood or other defects likely

to lessen the effectiveness of the barrel for the purpose intended.

(2) The body and heads must be of a design appropriate to the capacity and intended use of the barrel.

(3) Staves and heads must be sawn or cleft with the grain so that no annual ring extends over more than half the thickness of a stave or head.

(4) Barrel hoops must be of steel or iron of good quality. The hoops of 2C2 barrels may be of a suitable hardwood.

(5) For wooden barrels 2C1, the diameter of the bung-hole may not exceed half the width of the stave in which it is placed.

(6) For wooden barrels 2C2, heads must fit tightly into crozes.

(7) Maximum capacity of barrel: 250 L (66 gallons).

(8) Maximum net mass: 400 kg (882 pounds).

§ 178.511 Standards for aluminum and steel jerricans.

(a) The following are identification codes for aluminum and steel jerricans:

(1) 3A1 for a non-removable head steel jerrican;

(2) 3A2 for a removable head steel jerrican;

(3) 3B1 for a non-removable head aluminum jerrican; and

(4) 3B2 for a removable head aluminum jerrican.

(b) Construction requirements for aluminum and steel jerricans are as follows:

(1) For steel jerricans the body and heads must be constructed of steel sheet of suitable type and adequate thickness in relation to the capacity of the jerrican and its intended use. Minimum thickness and marking requirements in §§173.28(b)(4) and 178.503(a)(9) of this subchapter apply to jerricans intended for reuse.

(2) For aluminum jerricans the body and heads must be constructed of aluminum at least 99% pure or of an aluminum base alloy. Material must be of a type and of adequate thickness in relation to the capacity of the jerrican and to its intended use.

(3) Chimes of all jerricans must be mechanically seamed or welded. Body seams of jerricans intended to carry more than 40 L (11 gallons) of liquid must be welded. Body seams of jerricans intended to carry 40 L (11 gallons) or less must be mechanically seamed or welded.

(4) Openings in jerricans (3A1) may not exceed 7.0 cm (3 inches) in diameter. Jerricans with larger openings are considered to be of the removable head type. Closures must be so designed that they remain secure and leakproof under normal conditions of transport. Gaskets or other sealing elements must be used with closures, unless the closure is inherently leakproof.

(5) If materials used for body, heads, closures and fittings are not in themselves compatible with the contents to be transported, suitable internal protective coatings or treatments must be applied. These coatings or treatments must retain their protective properties under normal conditions of transport.

(6) Maximum capacity of jerrican: 60 L (16 gallons).

(7) Maximum net mass: 120 kg (265 pounds).

[Amdt. 178–97, 55 FR 52717, Dec. 21, 1990, as amended by Amdt. 178–102, 59 FR 28494, June 2, 1994; Amdt. 178–119, 62 FR 24742, May 6, 1997]

§ 178.512 Standards for steel or aluminum boxes.

(a) The following are identification codes for steel or aluminum boxes:

(1) 4A for a steel box; and

(2) 4B for an aluminum box.

(b) Construction requirements for steel or aluminum boxes are as follows:

(1) The strength of the metal and the construction of the box must be appropriate to the capacity and intended use of the box.

(2) Boxes must be lined with fiberboard or felt packing pieces or must have an inner liner or coating of suitable material in accordance with subpart C of part 173 of this subchapter. If a double seamed metal liner is used, steps must be taken to prevent the ingress of materials, particularly explosives, into the recesses of the seams.

(3) Closures may be of any suitable type, and must remain secure under normal conditions of transport.

(4) Maximum net mass: 400 kg (882 pounds).

[Amdt. 178–97, 55 FR 52717, Dec. 21, 1990, as amended by Amdt. 178–106, 59 FR 67521, Dec. 29, 1994]

§ 178.513 Standards for boxes of natural wood.

(a) The following are the identification codes for boxes of natural wood:

(1) 4C1 for an ordinary box; and

(2) 4C2 for a box with sift-proof walls.

(b) Construction requirements for boxes of natural wood are as follows:

(1) The wood used must be well-seasoned, commercially dry and free from defects that would materially lessen the strength of any part of the box. The strength of the material used and the method of construction must be appropriate to the capacity and intended use of the box. The tops and bottoms may be made of water-resistant reconstituted wood such as hard board, particle board or other suitable type.

(2) Fastenings must be resistant to vibration experienced under normal conditions of transportation. End grain nailing must be avoided whenever practicable. Joints which are likely to be highly stressed must be made using clenched or annular ring nails or equivalent fastenings.

(3) Each part of the 4C2 box must be one piece or equivalent. Parts are considered equivalent to one piece when one of the following methods of glued assembly is used: Linderman joint, tongue and groove joint, ship lap or rabbet joint, or butt joint with at least two corrugated metal fasteners at each joint.

(4) Maximum net mass: 400 kg (882 pounds).

[Amdt. 178–97, 55 FR 52717, Dec. 21, 1990, as amended by Amdt. 178–106, 59 FR 67521, Dec. 29, 1994]

§ 178.514 Standards for plywood boxes.

(a) The identification code for a plywood box is 4D.

(b) Construction requirements for plywood boxes are as follows:

(1) Plywood used must be at least 3 ply. It shall be made from well-seasoned rotary cut, sliced or sawn veneer, commercially dry and free from defects that would materially lessen the strength of the box. The strength of the material used and the method of construction must be appropriate to the capacity and intended use of the box. All adjacent plies must be glued with water-resistant adhesive. Other suitable materials may be used together with plywood in the construction of boxes. Boxes must be nailed or secured to corner posts or ends or assembled with other equally suitable devices.

(2) Maximum net mass: 400 kg (882 pounds).

§ 178.515 Standards for reconstituted wood boxes.

(a) The identification code for a reconstituted wood box is 4F.

(b) Construction requirements for reconstituted wood boxes are as follows:

(1) The walls of boxes must be made of water-resistant, reconstituted wood such as hardboard, particle board, or other suitable type. The strength of the material used and the method of construction must be appropriate to the capacity of the boxes and their intended use.

(2) Other parts of the box may be made of other suitable materials.

(3) Boxes must be securely assembled by means of suitable devices.

(4) Maximum net mass: 400 kg (882 pounds).

§ 178.516 Standards for fiberboard boxes.

(a) The identification code for a fiberboard box is 4G.

(b) Construction requirements for fiberboard boxes are as follows:

(1) Strong, solid or double-faced corrugated fiberboard (single or multiwall) must be used, appropriate to the capacity and intended use of the box. The water resistance of the outer surface must be such that the increase in mass, as determined in a test carried out over a period of 30 minutes by the Cobb method of determining water absorption, is not greater than 155 g per square meter (0.0316 pounds per square foot)—see ISO International Standard 535. Fiberboard must have proper bending qualities. Fiberboard must be cut, creased without cutting through any thickness of fiberboard, and slotted so as to permit assembly without cracking, surface breaks, or undue bending. The fluting of corrugated fiberboard must be firmly glued to the facings.

(2) The ends of boxes may have a wooden frame or be entirely of wood or other suitable material. Reinforcements of wooden battens or other suitable material may be used.

(3) Manufacturing joints. (i) Manufacturing joints in the bodies of boxes must be—

(A) Taped;

(B) Lapped and glued; or

(C) Lapped and stitched with metal staples.

(ii) Lapped joints must have an appropriate overlap.

(4) Where closing is effected by gluing or taping, a water resistant adhesive must be used.

(5) Boxes must be designed so as to provide a snug fit to the contents.

(6) Maximum net mass: 400 kg (882 pounds).

[Amdt. 178–97, 55 FR 52717, Dec. 21, 1990, and amended by Amdt. 178–99, 58 FR 51534, Oct. 1, 1993; Amdt. 178–106, 59 FR 67521, Dec. 29, 1994]

§ 178.517 Standards for plastic boxes.

(a) The following are identification codes for plastic boxes:

(1) 4H1 for an expanded plastic box; and

(2) 4H2 for a solid plastic box.

(b) Construction requirements for plastic boxes are as follows:

(1) The box must be manufactured from suitable plastic material and be of adequate strength in relation to its capacity and intended use. The box must be adequately resistant to aging and to degradation caused either by the substance contained or by ultra-violet radiation.

(2) An expanded plastic box must consist of two parts made of a molded expanded plastic material: a bottom section containing cavities for the inner receptacles, and a top section covering and interlocking with the bottom section. The top and bottom sections must be so designed that the inner receptacles fit snugly. The closure cap for any inner receptacle may not be in contact with the inside of the top section of the box.

(3) For transportation, an expanded plastic box must be closed with a self-adhesive tape having sufficient tensile strength to prevent the box from opening. The adhesive tape must be weather-resistant and its adhesive compatible with the expanded plastic material of the box. Other closing devices at least equally effective may be used.

(4) For solid plastic boxes, protection against ultra-violet radiation, if required, must be provided by the addition of carbon black or other suitable pigments or inhibitors. These additives must be compatible with the contents and remain effective throughout the life of the box. Where use is made of carbon black pigment or inhibitors other than those used in the manufacture of the tested design type, retesting may be waived if the carbon black content does not exceed 2 percent by mass or if the pigment content does not exceed 3 percent by mass; the content of inhibitors of ultra-violet radiation is not limited.

(5) Additives serving purposes other than protection against ultra-violet radiation may be included in the composition of the plastic material if they do not adversely affect the material of the box. Addition of these additives does not change the design type.

(6) Solid plastic boxes must have closure devices made of a suitable material of adequate strength and so designed as to prevent the box from unintentionally opening.

(7) Maximum net mass 4H1: 60 kg (132 pounds); 4H2: 400 kg (882 pounds).

§ 178.518 Standards for woven plastic bags.

(a) The following are identification codes for woven plastic bags:

(1) 5H1 for an unlined or non-coated woven plastic bag;

(2) 5H2 for a sift-proof woven plastic bag; and

(3) 5H3 for a water-resistant woven plastic bag.

(b) Construction requirements for woven plastic fabric bags are as follows:

(1) Bags must be made from stretched tapes or monofilaments of a suitable plastic material. The strength of the material used and the construction of the bag must be appropriate to the capacity and intended use of the bag.

(2) If the fabric is woven flat, the bags must be made by sewing or some other method ensuring closure of the bottom and one side. If the fabric is tubular, the bag must be closed by sewing, weaving, or some other equally strong method of closure.

(3) Bags, sift-proof, 5H2 must be made sift-proof by appropriate means such as use of paper or a plastic film bonded to

the inner surface of the bag or one or more separate inner liners made of paper or plastic material.

(4) Bags, water-resistant, 5H3: To prevent the entry of moisture, the bag must be made waterproof by appropriate means, such as separate inner liners of water-resistant paper (e.g., waxed kraft paper, double-tarred kraft paper or plastic-coated kraft paper), or plastic film bonded to the inner or outer surface of the bag, or one or more inner plastic liners.

(5) Maximum net mass: 50 kg (110 pounds).

[Amdt. 178–97, 55 FR 52717, Dec. 21, 1990, and amended by Amdt. 178–99, 58 FR 51534, Oct. 1, 1993]

§ 178.519 Standards for plastic film bags.

(a) The identification code for a plastic film bag is 5H4.

(b) Construction requirements for plastic film bags are as follows:

(1) Bags must be made of a suitable plastic material. The strength of the material used and the construction of the bag must be appropriate to the capacity and the intended use of the bag. Joints and closures must be capable of withstanding pressures and impacts liable to occur under normal conditions of transportation.

(2) Maximum net mass: 50 kg (110 pounds).

§ 178.520 Standards for textile bags.

(a) The following are identification codes for textile bags:

(1) 5L1 for an unlined or non-coated textile bag;

(2) 5L2 for a sift-proof textile bag; and

(3) 5L3 for a water-resistant textile bag.

(b) Construction requirements for textile bags are as follows:

(1) The textiles used must be of good quality. The strength of the fabric and the construction of the bag must be appropriate to the capacity and intended use of the bag.

(2) Bags, sift-proof, 5L2: The bag must be made sift-proof, by appropriate means, such as by the use of paper bonded to the inner surface of the bag by a water-resistant adhesive such as bitumen, plastic film bonded to the inner surface of the bag, or one or more inner liners made of paper or plastic material.

(3) Bags, water-resistant, 5L3: To prevent entry of moisture, the bag must be made waterproof by appropriate means, such as by the use of separate inner liners of water-resistant paper (e.g., waxed kraft paper, tarred paper, or plastic-coated kraft paper), or plastic film bonded to the inner surface of the bag, or one or more inner liners made of plastic material or metalized film or foil.

(4) Maximum net mass: 50 kg (110 pounds).

[Amdt. 178–97, 55 FR 52717, Dec. 21, 1990, as amended at 56 FR 66285, Dec. 20, 1991]

§ 178.521 Standards for paper bags.

(a) The following are identification codes for paper bags:

(1) 5M1 for a multi-wall paper bag; and

(2) 5M2 for a multi-wall water-resistant paper bag.

(b) Construction requirements for paper bags are as follows:

(1) Bags must be made of a suitable kraft paper, or of an equivalent paper with at least three plies. The strength of the paper and the construction of the bag must be appropriate to the capacity and intended use of the bag. Seams and closures must be sift-proof.

(2) Paper bags 5M2: To prevent the entry of moisture, a bag of four plies or more must be made waterproof by the use of either a water-resistant ply as one of the two outermost plies or a water-resistant barrier made of a suitable protective material between the two outermost plies. A 5M2 bag of three plies must be made waterproof by the use of a water-resistant ply as the outermost ply. When there is danger of the lading reacting with moisture, or when it is packed damp, a waterproof ply or barrier, such as double-tarred kraft paper, plastics-coated kraft paper, plastics film bonded to the inner surface of the bag, or one or more inner plastics liners, must also be placed next to the substance. Seams and closures must be waterproof.

(3) Maximum net mass: 50 kg (110 pounds).

[Amdt. 178–97, 55 FR 52717, Dec. 21, 1990, as amended at 56 FR 66285, Dec. 20, 1991; Amdt. 178–106, 59 FR 67521, Dec. 29, 1994]

§ 178.522 Standards for composite packagings with inner plastic receptacles.

(a) The following are the identification codes for composite packagings with inner plastic receptacles:

(1) 6HA1 for a plastic receptacle within a protective steel drum;

(2) 6HA2 for a plastic receptacle within a protective steel crate or box;

(3) 6HB1 for a plastic receptacle within a protective aluminum drum.

(4) 6HB2 for a plastic receptacle within a protective aluminum crate or box.

(5) 6HC for a plastic receptacle within a protective wooden box.

(6) 6HD1 for a plastic receptacle within a protective plywood drum;

(7) 6HD2 for a plastic receptacle within a protective plywood box;

(8) 6HG1 for a plastic receptacle within a protective fiber drum;

(9) 6HG2 for a plastic receptacle within a protective fiberboard box;

(10) 6HH1 for a plastic receptacle within a protective plastic drum; and

(11) 6HH2 for a plastic receptacle within a protective plastic box.

(b) Construction requirements for composite packagings with inner receptacles of plastic are as follows:

(1) Inner receptacles must be constructed under the applicable construction requirements prescribed in § 178.509(b) (1) through (7) of this subpart.

(2) The inner plastic receptacle must fit snugly inside the outer packaging, which must be free of any projections which may abrade the plastic material.

(3) Outer packagings must be constructed as follows:

(i) 6HA1 or 6HB1: Protective packaging must conform to the requirements for steel drums in § 178.504(b) of this subpart, or aluminum drums in § 178.505(b) of this subpart.

(ii) 6HA2 or 6HB2: Protective packagings with steel or aluminum crate must conform to the requirements for steel or aluminum boxes found in § 178.512(b) of this subpart.

(iii) 6HC protective packaging must conform to the requirements for wooden boxes in § 178.513(b) of this subpart.

(iv) 6HD1: Protective packaging must conform to the requirements for plywood drums, in § 178.507(b) of this subpart.

(v) 6HD2: Protective packaging must conform to the requirements of plywood boxes, in § 178.514(b) of this subpart.

(vi) 6HG1: Protective packaging must conform to the requirements for fiber drums, in § 178.508(b) of this subpart.

(vii) 6HG2: protective packaging must conform to the requirements for fiberboard boxes, in § 178.516(b) of this subpart.

(viii) 6HH1: Protective packaging must conform to the requirements for plastic drums, in § 178.509(b).

(ix) 6HH2: Protective packaging must conform to the requirements for plastic boxes, in § 178.517(b).

(4) Maximum capacity of inner receptacles is as follows: 6HA1, 6HB1, 6HD1, 6HG1, 6HH1—250 L (66 gallons); 6HA2, 6HB2, 6HC, 6HD2, 6HG2, 6HH2—60 L (16 gallons).

(5) Maximum net mass is as follows: 6HA1, 6HB1, 6HD1, 6HG1, 6HH1—400 kg (882 pounds); 6HB2, 6HC, 6HD2, 6HG2, 6HH2—75 kg (165 pounds).

[Amdt. 178–97, 55 FR 52717, Dec. 21, 1990, as amended by Amdt. 178–106, 59 FR 67521, Dec. 29, 1994]

§ 178.523 Standards for composite packagings with inner glass, porcelain, or stoneware receptacles.

(a) The following are identification codes for composite packagings with inner receptacles of glass, porcelain, or stoneware:

(1) 6PA1 for glass, porcelain, or stoneware receptacles within a protective steel drum;

(2) 6PA2 for glass, porcelain, or stoneware receptacles within a protective steel crate or box;

(3) 6PB1 for glass, porcelain, or stoneware receptacles within a protective aluminum drum;

(4) 6PB2 for glass, porcelain, or stoneware receptacles within a protective aluminum crate or box;

(5) 6PC for glass, porcelain, or stoneware receptacles within a protective wooden box;

(6) 6PD1 for glass, porcelain, or stoneware receptacles within a protective plywood drum;

(7) 6PD2 for glass, porcelain, or stoneware receptacles within a protective wickerwork hamper;

(8) 6PG1 for glass, porcelain, or stoneware receptacles within a protective fiber drum;

(9) 6PG2 for glass, porcelain, or stoneware receptacles within a protective fiberboard box;

(10) 6PH1 for glass, porcelain, or stoneware receptacles within a protective expanded plastic packaging; and

(11) 6PH2 for glass, porcelain, or stoneware receptacles within a protective solid plastic packaging.

(b) Construction requirements for composite packagings with inner receptacles of glass, porcelain, or stoneware are as follows:

(1) Inner receptacles must conform to the following requirements:

(i) Receptacles must be of suitable form (cylindrical or pear-shaped), be made of good quality materials free from any defect that could impair their strength, and be firmly secured in the outer packaging.

(ii) Any part of a closure likely to come into contact with the contents of the receptacle must be resistant to those contents. Closures must be fitted so as to be leakproof and secured to prevent any loosening during transportation. Vented closures must conform to §173.24(f) of this subchapter.

(2) Protective packagings must conform to the following requirements:

(i) For receptacles with protective steel drum 6PAl, the drum must comply with §178.504(b) of this subpart. However, the removable lid required for this type of packaging may be in the form of a cap.

(ii) For receptacles with protective packaging of steel crate or steel box 6PA2, the protective packaging must conform to the following:

(A) Section 178.512(b) of this subpart.

(B) In the case of cylindrical receptacles, the protective packaging must, when upright, rise above the receptacle and its closure; and

(C) If the protective crate surrounds a pear-shaped receptacle and is of matching shape, the protective packaging must be fitted with a protective cover (cap).

(iii) For receptacles with protective aluminum drum 6PB1, the requirements of §178.505(b) of this subpart apply to the protective packaging.

(iv) For receptacles with protective aluminum box or crate 6PB2, the requirements of §178.512(b) of this subpart apply to the protective packaging.

(v) For receptacles with protective wooden box 6PC, the requirements of §178.513(b) of this subpart apply to the protective packaging.

(vi) For receptacles with protective plywood drum 6PD1, the requirements of §178.507(b) of this subpart apply to the protective packaging.

(vii) For receptacles with protective wickerwork hamper 6PD2, the wickerwork hamper must be properly made with material of good quality. The hamper must be fitted with a protective cover (cap) so as to prevent damage to the receptacle.

(viii) For receptacles with protective fiber drum 6PG1, the drum must conform to the requirements of §178.508(b) of this subpart.

(ix) For receptacles with protective fiberboard box 6PG2, the requirements of §178.516(b) of this subpart apply to the protective packaging.

(x) For receptacles with protective solid plastic or expanded plastic packaging 6PH1 or 6PH2, the requirements of §178.517(b) of this subpart apply to the protective packaging. Solid protective plastic packaging must be manufactured from high-density polyethylene from some other comparable plastic material. The removable lid required for this type of packaging may be a cap.

(3) Quantity limitations are as follows:

(i) Maximum net capacity for packaging for liquids: 60 L (16 gallons).

(ii) Maximum net mass for packagings for solids: 75 kg (165 pounds).

Subpart M—Testing of Non-bulk Packagings and Packages

SOURCE: Amdt. 178–97, 55 FR 52723, Dec. 21, 1990, unless otherwise noted.

§ 178.600 Purpose and scope.

This subpart prescribes certain testing requirements for performance-oriented packagings identified in subpart L of this part.

[Amdt. 178–97, 55 FR 52717, Dec. 21, 1990, and amended by Amdt. 178–99, 58 FR 51534, Oct. 1, 1993]

§ 178.601 General requirements.

(a) *General.* The test procedures prescribed in this subpart are intended to ensure that packages containing hazardous materials can withstand normal conditions of transportation and are considered minimum requirements. Each packaging must be manufactured and assembled so as to be capable of successfully passing the prescribed tests and of conforming to the requirements of § 173.24 of this subchapter at all times while in transportation.

(b) *Responsibility.* It is the responsibility of the packaging manufacturer to assure that each package is capable of passing the prescribed tests. To the extent that a package assembly function, including final closure, is performed by the person who offers a hazardous material for transportation, that person is responsible for performing the function in accordance with §§ 173.22 and 178.2 of this subchapter.

(c) *Definitions.* For the purpose of this subpart:

(1) *Design qualification testing* is the performance of the drop, leakproofness, hydrostatic pressure, stacking, and cooperage tests, as applicable, prescribed in §§ 178.603, 178.604, 178.605, 178.606, or § 178.607, respectively, for each new or different packaging, at the start of production of that packaging.

(2) *Periodic retesting* is the performance of the drop, leakproofness, hydrostatic pressure, and stacking tests, as applicable, prescribed in §§ 178.603, 178.604, 178.605, or § 178.606, respectively, at the frequency specified in § 178.601(e) of this subpart.

(3) *Production testing* is the performance of the leakproofness test prescribed in § 178.604 of this subpart on each single or composite packaging intended to contain a liquid.

(4) *A different packaging* is one that differs (i.e. is not identical) from a previously produced packaging in structural design, size, material of construction, wall thickness or manner of construction but does not include:

(i) A packaging which differs only in surface treatment;

(ii) A combination packaging which differs only in that the outer packaging has been successfully tested with different inner packagings. A variety of such inner packagings may be assembled in this outer packaging without further testing;

(iii) A plastic packaging which differs only with regard to additives which conform to § 178.509(b)(3) or § 178.517(b)(4) or (5) of this part;

(iv) A combination packaging with inner packagings conforming to the provisions of paragraph (g) of this section;

(v) Packagings which differ from the design type only in their lesser design height; or

(vi) For a steel drum, variations in design elements which do not constitute a different design type under the provisions of paragraph (g)(8) of this section.

(d) *Design qualification testing.* The packaging manufacturer shall achieve successful test results for the design qualification testing at the start of production of each new or different packaging.

(e) *Periodic retesting.* The packaging manufacturer shall achieve successful test results for the periodic retesting at intervals established by the manufacturer of sufficient frequency to ensure that each packaging produced by the manufacturer is capable of passing the design qualification tests. Changes in retest frequency are subject to the approval of the Associate Administrator for Hazardous Materials Safety. For single or composite packagings, the periodic retests must be conducted at least once every 12 months. For combination packagings, the periodic retests must be conducted at least once every 24 months.

(f) *Test samples.* The manufacturer shall conduct the design qualification and periodic tests prescribed in this subpart using random samples of packagings, in the numbers specified in the appropriate test section. In addition, the leakproofness test, when required, shall be performed on each

packaging produced by the manufacturer, and each packaging prior to reuse under §173.28 of this subchapter, by the reconditioner.

(g) *Selective testing.* The selective testing of packagings that differ only in minor respects from a tested type is permitted as described in this section. For air transport, packagings must comply with §173.27(c)(1) and (c)(2) of this subchapter.

(1) *Selective testing of combination packagings. Variation 1.* Variations are permitted in inner packagings of a tested combination package, without further testing of the package, provided an equivalent level of performance is maintained, as follows:

(i) Inner packagings of equivalent or smaller size may be used provided—

(A) The inner packagings are of similar design to the tested inner packagings (i.e. shape—round, rectangular, etc.);

(B) The material of construction of the inner packagings (glass, plastic, metal, etc.) offers resistance to impact and stacking forces equal to or greater than that of the originally tested inner packaging;

(C) The inner packagings have the same or smaller openings and the closure is of similar design (e.g., screw cap, friction lid, etc.);

(D) Sufficient additional cushioning material is used to take up void spaces and to prevent significant movement of the inner packagings;

(E) Inner packagings are oriented within the outer packaging in the same manner as in the tested package; and,

(F) The gross mass of the package does not exceed that originally tested.

(ii) A lesser number of the tested inner packagings, or of the alternative types of inner packagings identified in paragraph (g)(1)(i) of this section, may be used provided sufficient cushioning is added to fill void space(s) and to prevent significant movement of the inner packagings.

(2) *Selective testing of combination packagings. Variation 2.* Articles or inner packagings of any type, for solids or liquids, may be assembled and transported without testing in an outer packaging under the following conditions:

(i) The outer packaging must have been successfully tested in accordance with §178.603 with fragile (e.g. glass) inner packagings containing liquids at the Packing Group I drop height;

(ii) The total combined gross mass of inner packagings may not exceed one-half the gross mass of inner packagings used for the drop test;

(iii) The thickness of cushioning material between inner packagings and between inner packagings and the outside of the packaging may not be reduced below the corresponding thickness in the originally tested packaging; and when a single inner packaging was used in the original test, the thickness of cushioning between inner packagings may not be less than the thickness of cushioning between the outside of the packaging and the inner packaging in the original test. When either fewer or smaller inner packagings are used (as compared to the inner packagings used in the drop test), sufficient additional cushioning material must be used to take up void spaces.

(iv) The outer packaging must have successfully passed the stacking test set forth in §178.606 of this subpart when empty, i.e., without either inner packagings or cushioning materials. The total mass of identical packages must be based on the combined mass of inner packagings used for the drop test;

(v) Inner packagings containing liquids must be completely surrounded with a sufficient quantity of absorbent material to absorb the entire liquid contents of the inner packagings;

(vi) When the outer packaging is intended to contain inner packagings for liquids and is not leakproof, or is intended to contain inner packagings for solids and is not siftproof, a means of containing any liquid or solid contents in the event of leakage must be provided in the form of a leakproof liner, plastic bag, or other equally efficient means of containment. For packagings containing liquids, the absorbent material required in paragraph (g)(2)(v) of this section must be placed inside the means of containing liquid contents; and

(vii) Packagings must be marked in accordance with §178.503 of this part as

having been tested to Packing Group I performance for combination packagings. The marked maximum gross mass may not exceed the sum of the mass of the outer packaging plus one half the mass of the filled inner packagings of the tested combination packaging. In addition, the marking required by § 178.503(a)(2) of this part must include the letter ''V''.

(3) *Variation 3.* Packagings other than combination packagings which are produced with reductions in external dimensions (i.e., length, width or diameter) of up to 25 percent of the dimensions of a tested packaging may be used without further testing provided an equivalent level of performance is maintained. The packagings must, in all other respects (including wall thicknesses), be identical to the tested design-type. The marked gross mass (when required) must be reduced in proportion to the reduction in volume.

(4) *Variation 4.* Variations are permitted in outer packagings of a tested design-type combination packaging, without further testing, provided an equivalent level of performance is maintained, as follows:

(i) Each external dimension (length, width and height) is less than or equal to the corresponding dimension of the tested design-type;

(ii) The structural design of the tested outer packaging (i.e. methods of construction, materials of construction, strength characteristics of materials of construction, method of closure and material thicknesses) is maintained;

(iii) The inner packagings are identical to the inner packagings used in the tested design type except that their size and mass may be less; and they are oriented within the outer packaging in the same manner as in the tested packaging;

(iv) The same type or design of absorbent materials, cushioning materials and any other components necessary to contain and protect inner packagings, as used in the tested design type, are maintained. The thickness of cushioning material between inner packagings and between inner packagings and the outside of the packaging may not be less than the thicknesses in the tested design type packaging; and

(v) Sufficient additional cushioning material is used to take up void spaces and to prevent significant movement of the inner packagings.

An outer packaging qualifying for use in transport in accordance with all of the above conditions may also be used without testing to transport inner packagings substituted for the originally tested inner packagings in accordance with the conditions set out in Variation 1 in paragraph (g)(1) of this section.

(5) *Variation 5.* Single packagings (i.e., non-bulk packagings other than combination packagings), that differ from a tested design type only to the extent that the closure device or gasketing differs from that used in the originally tested design type, may be used without further testing, provided an equivalent level of performance is maintained, subject to the following conditions (the qualifying tests):

(i) A packaging with the replacement closure devices or gasketing must successfully pass the drop test specified in § 178.603 in the orientation which most severely tests the integrity of the closure or gasket;

(ii) When intended to contain liquids, a packaging with the replacement closure devices or gasketing must successfully pass the leakproofness test specified in § 178.604, the hydrostatic pressure test specified in § 178.605, and the stacking test specified in § 178.606.

Replacement closures and gasketings qualified under the above test requirements are authorized without additional testing for packagings described in paragraph (g)(3) of this section. Replacement closures and gasketings qualified under the above test requirements also are authorized without additional testing for different tested design types packagings of the same type as the originally tested packaging, provided the original design type tests are more severe or comparable to tests which would otherwise be conducted on the packaging with the replacement closures or gasketings. (For example: The packaging used in the qualifying tests has a lesser packaging wall thickness than the packaging with replacement closure devices or gasketing; the

gross mass of the packaging used in the qualifying drop test equals or exceeds the mass for which the packaging with replacement closure devices or gasketing was tested; the packaging used in the qualifying drop test was dropped from the same or greater height than the height from which the packaging with replacement closure devices or gasketing was dropped in design type tests; and the specific gravity of the substance used in the qualifying drop test was the same or greater than the specific gravity of the liquid used in the design type tests of the packaging with replacement closure devices or gasketing.)

(6) The provisions in Variations 1, 2, and 4 in paragraphs (g)(1), (2) and (4) of this section for combination packagings may be applied to packagings containing articles, where the provisions for inner packagings are applied analogously to the articles. In this case, inner packagings need not comply with § 173.27(c)(1) and (c)(2) of this subchapter.

(7) *Approval of selective testing.* In addition to the provisions of § 178.601(g)(1) through (g)(6) of this subpart, the Associate Administrator for Hazardous Materials Safety may approve the selective testing of packagings that differ only in minor respects from a tested type.

(8) For a steel drum with a capacity greater than 50 L (13 gallons) manufactured from low carbon, cold-rolled sheet steel meeting ASTM designations A366/A366M or A568/A568M, variations in elements other than the following design elements are considered minor and do not constitute a different drum design type, or ''different packaging'' as defined in paragraph (c) of this section for which design qualification testing and periodic retesting are required. Minor variations authorized without further testing include changes in the identity of the supplier of component material made to the same specifications, or the original manufacturer of a DOT specification or UN standard drum to be remanufactured. A change in any one or more of the following design elements constitutes a different drum design type:

(i) The packaging type and category of the original drum and the remanufactured drum, i.e., 1A1 or 1A2;

(ii) The style, (i.e., straight-sided or tapered);

(iii) Except as provided in paragraph (g)(3) of this section, the rated (marked) capacity and outside dimensions;

(iv) The physical state for which the packaging was originally approved (e.g., tested for solids or liquids);

(v) An increase in the marked level of performance of the original drum (i.e., to a higher packing group, hydrostatic test pressure, or specific gravity to which the packaging has been tested);

(vi) Type of side seam welding;

(vii) Type of steel;

(viii) An increase greater than 10% or any decrease in the steel thickness of the head, body, or bottom;

(ix) End seam type, (e.g., triple or double seam);

(x) A reduction in the number of rolling hoops which equal or exceed the diameter over the chimes;

(xi) The location, type or size, and material of closures (other than the cover of UN 1A2 drums); and

(xii) For UN 1A2 drums:

(A) Gasket material (e.g., plastic), or properties affecting the performance of the gasket;

(B) Configuration or dimensions of the gasket;

(C) Closure ring style including bolt size, (e.g., square or round back, 0.625'' bolt); and

(D) Closure ring thickness.

(h) *Approval of equivalent packagings.* A packaging having specifications different from those in §§ 178.504–178.523 of this part, or which is tested using methods or test intervals, other than those specified in subpart M of this part, may be used if approved by the Associate Administrator for Hazardous Materials Safety. Such packagings must be shown to be equally effective, and testing methods used must be equivalent.

(i) *Proof of compliance.* Notwithstanding the periodic retest intervals specified in paragraph (e) of this section, the Associate Administrator for Hazardous Materials Safety may at any time require demonstration of compliance by

a manufacturer, through testing in accordance with this subpart, that packagings meet the requirements of this subpart. As required by the Associate Administrator for Hazardous Materials Safety, the manufacturer shall either—

(1) Conduct performance tests, or have tests conducted by an independent testing facility, in accordance with this subpart; or

(2) Supply packagings, in quantities sufficient to conduct tests in accordance with this subpart, to the Associate Administrator for Hazardous Materials Safety or a designated representative of the Associate Administrator.

(j) *Coatings.* If an inner treatment or coating of a packaging is required for safety reasons, the manufacturer shall design the packaging so that the treatment or coating retains its protective properties even after withstanding the tests prescribed by this subpart.

(k) *Number of test samples.* Provided the validity of the test results is not affected and with the approval of the Associate Administrator for Hazardous Materials Safety, several tests may be performed on one sample.

(l) *Record retention.* Following each design qualification test and each periodic retest on a packaging, a test report must be prepared. The test report must be maintained at each location where the packaging is manufactured and each location where the design qualification tests are conducted, for as long as the packaging is produced and for at least two years thereafter, and at each location where the periodic retests are conducted until such tests are successfully performed again and a new test report produced. In addition, a copy of the test report must be maintained by a person certifying compliance with this part. The test report must be made available to a user of a packaging or a representative of the Department upon request. The test report, at a minimum, must contain the following information:

(1) Name and address of test facility;

(2) Name and address of applicant (where appropriate);

(3) A unique test report identification;

(4) Date of the test report;

(5) Manufacturer of the packaging;

(6) Description of the packaging design type (e.g. dimensions, materials, closures, thickness, etc.), including methods of manufacture (e.g. blow molding) and which may include drawing(s) and/or photograph(s);

(7) Maximum capacity;

(8) Characteristics of test contents, e.g. viscosity and relative density for liquids and particle size for solids;

(9) Test descriptions and results; and

(10) Signed with the name and title of signatory.

[Amdt. 178–97, 55 FR 52723, Dec. 21, 1990, as amended at 56 FR 66285, Dec. 20, 1991; 57 FR 45465, Oct. 1, 1992; Amdt. 178–102, 59 FR 28494, June 2, 1994; Amdt. 178–106, 59 FR 67521, 67522, Dec. 29, 1994; Amdt. 178–117, 61 FR 50628, Sept. 26, 1996]

§ 178.602 Preparation of packagings and packages for testing.

(a) Except as otherwise provided in this subchapter, each packaging and package must be closed in preparation for testing and tests must be carried out in the same manner as if prepared for transportation, including inner packagings in the case of combination packagings.

(b) For the drop and stacking test, inner and single-unit receptacles must be filled to not less than 95 percent of maximum capacity (see § 171.8 of this subchapter) in the case of solids and not less than 98 percent of maximum capacity in the case of liquids. The material to be transported in the packagings may be replaced by a nonhazardous material, except for chemical compatibility testing or where this would invalidate the results of the tests.

(c) If the material to be transported is replaced for test purposes by a nonhazardous material, the material used must be of the same or higher specific gravity as the material to be carried, and its other physical properties (grain, size, viscosity) which might influence the results of the required tests must correspond as closely as possible to those of the hazardous material to be transported. Water may also be used for the liquid drop test under the conditions specified in § 178.603(e) of this subpart. It is permissible to use additives, such as bags of lead shot, to achieve the requisite total package

mass, so long as they are placed so that the test results are not affected.

(d) Paper or fiberboard packagings must be conditioned for at least 24 hours immediately prior to testing in an atmosphere maintained—

(1) At 50 percent ±2 percent relative humidity, and at a temperature of 23 °C±2 °C (73 °F±4 °F). Average values should fall within these limits. Short-term fluctuations and measurement limitations may cause individual measurements to vary by up to ± 5 percent relative humidity without significant impairment of test reproducibility;

(2) At 65 percent ±2 percent relative humidity, and at a temperature of 20 °C±2 °C (68 °F±4 °F), or 27 °C±2 °C (81 °F±4 °F). Average values should fall within these limits. Short-term fluctuations and measurement limitations may cause individual measurements to vary by up to ± 5 percent relative humidity without significant impairment of test reproducibility; or

(3) For testing at periodic intervals only (i.e., other than initial design qualification testing), at ambient conditions.

(e) Except as otherwise provided, each packaging must be closed in preparation for testing in the same manner as if prepared for actual shipment. All closures must be installed using proper techniques and torques.

(f) Bung-type barrels made of natural wood must be left filled with water for at least 24 hours before the tests.

[Amdt. 178–97, 55 FR 52723, Dec. 21, 1990, as amended at 56 FR 66286, Dec. 20, 1991; Amdt. 178–106, 59 FR 67522, Dec. 29, 1994]

§178.603 Drop test.

(a) *General.* The drop test must be conducted for the qualification of all packaging design types and performed periodically as specified in §178.601(e). For other than flat drops, the center of gravity of the test packaging must be vertically over the point of impact. Where more than one orientation is possible for a given drop test, the orientation most likely to result in failure of the packaging must be used. The number of drops required and the packages' orientations are as follows:

Packaging	No. of tests (samples)	Drop orientation of samples
Steel drums, Aluminum drums, Metal drums (other than steel or aluminum), Steel Jerricans, Plywood drums, Wooden barrels, Fiber drums, Plastic drums and Jerricans, Composite packagings which are in the shape of a drum.	Six—(three for each drop).	First drop (using three samples): The package must strike the target diagonally on the chime or, if the packaging has no chime, on a circumferential seam or an edge. Second drop (using the other three samples): The package must strike the target on the weakest part not tested by the first drop, for example a closure or, for some cylindrical drums, the welded longitudinal seam of the drum body.
Boxes of natural wood, Plywood boxes, Reconstituted wood boxes, Fiberboard boxes, Plastic boxes, Steel or aluminum boxes, Composite packagings which are in the shape of a box.	Five—(one for each drop).	First drop: Flat on the bottom (using the first sample). Second drop: Flat on the top (using the second sample). Third drop: Flat on the long side (using the third sample). Fourth drop: Flat on the short side (using the fourth sample). Fifth drop: On a corner (using the fifth sample).
Bags—single-ply with a side seam	Three—(three drops per bag).	First drop: Flat on a wide face (using all three samples). Second drop: Flat on a narrow face (using all three samples). Third drop: On an end of the bag (using all three samples).
Bags—single-ply without a side seam, or multi-ply.	Three—(two drops per bag).	First drop: Flat on a wide face (using all three samples). Second drop: On an end of the bag (using all three samples).

(b) *Exceptions.* For testing of single or composite packagings constructed of stainless steel, nickel, or monel at periodic intervals only (i.e., other than design qualification testing), the drop test may be conducted with two samples, one sample each for the two drop orientations. These samples may have been previously used for the hydrostatic pressure or stacking test. Exceptions for the number of steel and aluminum packaging samples used for conducting the drop test are subject to the approval of the Associate Administrator for Hazardous Materials Safety.

(c) *Special preparation of test samples for the drop test.* Testing of plastic drums, plastic jerricans, plastic boxes other than expanded polystyrene boxes, composite packagings (plastic material), and combination packagings with plastic inner packagings other than plastic bags intended to contain solids or articles must be carried out when the temperature of the test sample and its contents has been reduced to −18 °C (0 °F) or lower. Test liquids shall be kept in the liquid state, if necessary, by the addition of anti-freeze. Test samples prepared in this way are not required to be conditioned in accordance with § 178.602(d).

(d) *Target.* The target must be a rigid, non-resilient, flat and horizontal surface.

(e) *Drop height.* Drop heights, measured as the vertical distance from the target to the lowest point on the package, must be determined as follows:

(1) For solids and liquids, if the test is performed with the solid or liquid to be transported or with a non-hazardous material having essentially the same physical characteristic, the drop height must be determined according to packing group, as follows:

(i) Packing Group I: 1.8 m (5.9 feet).

(ii) Packing Group II: 1.2 m (3.9 feet).

(iii) Packing Group III: 0.8 m (2.6 feet).

(2) For liquids, if the test is performed with water—

(i) Where the materials to be carried have a specific gravity not exceeding 1.2, drop height must be determined according to packing group, as follows:

(A) Packing Group I: 1.8 m (5.9 feet).

(B) Packing Group II: 1.2 m (3.9 feet).

(C) Packing Group III: 0.8 m (2.6 feet).

(ii) Where the materials to be transported have a specific gravity exceeding 1.2, the drop height must be calculated on the basis of the specific gravity (SG) of the material to be carried, rounded up to the first decimal, as follows:

(A) Packing Group I: SG X 1.5 m (4.9 feet).

(B) Packing Group II: SG X 1.0 m (3.3 feet).

(C) Packing Group III: SG X 0.67 m (2.2 feet).

(f) *Criteria for passing the test.* A package is considered to successfully pass the drop tests if for each sample tested—

(1) For packagings containing liquid, each packaging does not leak when equilibrium has been reached between the internal and external pressures, except for inner packagings of combination packagings when it is not necessary that the pressures be equalized;

(2) For removable head drums for solids, the entire contents are retained by an inner packaging (e.g., a plastic bag) even if the closure on the top head of the drum is no longer sift-proof;

(3) For a bag, neither the outermost ply nor an outer packaging exhibits any damage likely to adversely affect safety during transport;

(4) For a composite or combination packaging, there is no damage to the outer packaging likely to adversely affect safety during transport, and there is no leakage of the filling substance from the inner packaging;

(5) For a drum, jerrican or bag, any discharge from a closure is slight and ceases immediately after impact with no further leakage; and

(6) No rupture is permitted in packagings for materials in Class 1 which would permit spillage of loose explosive substances or articles from the outer packaging.

[Amdt. 178–97, 55 FR 52723, Dec. 21, 1990, as amended at 56 FR 66286, Dec. 20, 1991; 57 FR 45465, Oct. 1, 1992; Amdt. 178–99, 58 FR 51534, Oct. 1, 1993; Amdt. 178–106, 59 FR 67522, Dec. 29, 1994]

§ 178.604 Leakproofness test.

(a) *General.* The leakproofness test must be performed with compressed air or other suitable gases on all packagings intended to contain liquids, except that:

(1) The inner receptacle of a composite packaging may be tested without the outer packaging provided the test results are not affected; and

(2) This test is not required for inner packagings of combination packagings.

(b) *Number of packagings to be tested—*

(1) *Production testing.* All packagings subject to the provisions of this section must be tested and must pass the leakproofness test:

(i) Before they are first used in transportation; and

(ii) Prior to reuse, when authorized for reuse by §173.28 of this subchapter.

(2) *Design qualification and periodic testing.* Three samples of each different packaging must be tested and must pass the leakproofness test. Exceptions for the number of samples used in conducting the leakproofness test are subject to the approval of the Associate Administrator for Hazardous Materials Safety.

(c) *Special preparation*—(1) For design qualification and periodic testing, packagings must be tested with closures in place. For production testing, packagings need not have their closures in place. Removable heads need not be installed during production testing.

(2) For testing with closures in place, vented closures must either be replaced by similar non-vented closures or the vent must be sealed.

(d) *Test method.* The packaging must be restrained under water while an internal air pressure is applied; the method of restraint must not affect the results of the test. The test must be conducted, for other than production testing, for a minimum time of five minutes. Other methods, at least equally effective, may be used in accordance with appendix B of this Part.

(e) *Pressure applied.* An internal air pressure (gauge) must be applied to the packaging as indicated for the following packing groups:

(1) Packing Group I: Not less than 30 kPa (4 psi).

(2) Packing Group II: Not less than 20 kPa (3 psi).

(3) Packing Group III: Not less than 20 kPa (3 psi).

(f) *Criteria for passing the test.* A packaging passes the test if there is no leakage of air from the packaging.

[Amdt. 178–97, 55 FR 52723, Dec. 21, 1990, as amended at 56 FR 66286, Dec. 20, 1991; Amdt. 178–106, 59 FR 67522, Dec. 29, 1994]

§178.605 Hydrostatic pressure test.

(a) *General.* The hydrostatic pressure test must be conducted for the qualification of all metal, plastic, and composite packaging design types intended to contain liquids and be performed periodically as specified in §178.601(e). This test is not required for inner packagings of combination packagings. For internal pressure requirements for inner packagings of combination packagings intended for transportation by aircraft, see §173.27(c) of this subchapter.

(b) *Number of test samples.* Three test samples are required for each different packaging. For packagings constructed of stainless steel, monel, or nickel, only one sample is required for periodic retesting of packagings. Exceptions for the number of aluminum and steel sample packagings used in conducting the hydrostatic pressure test are subject to the approval of the Associate Administrator for Hazardous Materials Safety.

(c) *Special preparation of receptacles for testings.* Vented closures must either be replaced by similar non-vented closures or the vent must be sealed.

(d) *Test method and pressure to be applied.* Metal packagings and composite packagings other than plastic (e.g., glass, porcelain or stoneware), including their closures, must be subjected to the test pressure for 5 minutes. Plastic packagings and composite packagings (plastic material), including their closures, must be subjected to the test pressure for 30 minutes. This pressure is the one to be marked as required in §178.503(a)(5) of this part. The receptacles must be supported in a manner that does not invalidate the test. The test pressure must be applied continuously and evenly, and it must be kept constant throughout the test period. The hydraulic pressure (gauge) applied, taken at the top of the receptacle, and determined by any one of the following methods must be:

(1) Not less than the total gauge pressure measured in the packaging (i.e., the vapor pressure of the filling material and the partial pressure of the air or other inert gas minus 100 kPa (15 psi)) at 55 °C (131 °F), multiplied by a safety factor of 1.5. This total gauge pressure must be determined on the basis of a maximum degree of filling in accordance with §173.24a(b)(3) of this subchapter and a filling temperature of 15 °C (59 °F);

(2) Not less than 1.75 times the vapor pressure at 50 °C (122 °F) of the material to be transported minus 100 kPa (15 psi) but with a minimum test pressure of 100 kPa (15 psi); or

(3) Not less than 1.5 times the vapor pressure at 55 °C (l3l °F) of the material to be transported minus 100 kPa (15 psi), but with a minimum test pressure of 100 kPa (15 psi).

Packagings intended to contain hazardous materials of Packing Group I must be tested to a minimum test pressure of 250 kPa (36 psi).

(e) *Criteria for passing the test.* A package passes the hydrostatic test if, for each test sample, there is no leakage of liquid from the package.

[Amdt. 178–97, 55 FR 52723, Dec. 21, 1990, as amended at 56 FR 66286, Dec. 20, 1991; Amdt. 178–99, 58 FR 51534, Oct. 1, 1993; Amdt. 178–102, 59 FR 28494, June 2, 1994]

§ 178.606 Stacking test.

(a) *General.* All packaging design types other than bags must be subjected to a stacking test.

(b) *Number of test samples.* Three test samples are required for each different packaging. For periodic retesting of packagings constructed of stainless steel, monel, or nickel, only one test sample is required. Exceptions for the number of aluminum and steel sample packagings used in conducting the stacking test are subject to the approval of the Associate Administrator for Hazardous Materials Safety. Notwithstanding the provisions of § 178.602(a) of this subpart, combination packagings may be subjected to the stacking test without their inner packagings, except where this would invalidate the results of the test.

(c) *Test method*—(1) *Design qualification testing.* The test sample must be subjected to a force applied to the top surface of the test sample equivalent to the total weight of identical packages which might be stacked on it during transport; where the contents of the test sample are non-hazardous liquids with specific gravities different from that of the liquid to be transported, the force must be calculated based on the specific gravity that will be marked on the packaging. The minimum height of the stack, including the test sample, must be 3.0 m (10 feet). The duration of the test must be 24 hours, except that plastic drums, jerricans, and composite packaging 6HH, intended for liquids, shall be subjected to the stacking test for a period of 28 days at a temperature of not less than 40 °C (104 °F). Alternative test methods which yield equivalent results may be used if approved by the Associate Administrator for Hazardous Materials Safety. In guided load tests, stacking stability must be assessed after completion of the test by placing two filled packagings of the same type on the test sample. The stacked packages must maintain their position for one hour. Plastic packagings must be cooled to ambient temperature before this stacking stability assessment.

(2) *Periodic retesting.* The test sample must be tested in accordance with:

(i) Section 178.606(c)(1) of this subpart; or

(ii) The packaging may be tested using a dynamic compression testing machine. The test must be conducted at room temperature on an empty, unsealed packaging. The test sample must be centered on the bottom platen of the testing machine. The top platen must be lowered until it comes in contact with the test sample. Compression must be applied end to end. The speed of the compression tester must be one-half inch plus or minus one-fourth inch per minute. An initial preload of 50 pounds must be applied to ensure a definite contact between the test sample and the platens. The distance between the platens at this time must be recorded as zero deformation. The force A to then be applied must be calculated using the formula:

Liquids: $A=(n-1)\ [w+ (s \times v \times 8.3 \times .98)] \times 1.5$;
Solids: $A= (n-1)\ [w+ (s \times v \times 8.3 \times .95)] \times 1.5$

Where:

A=applied load in pounds.

n=minimum number of containers that, when stacked, reach a height of 3 m.

s=specific gravity of lading.

w=maximum weight of one empty container in pounds.

v=actual capacity of container (rated capacity + outage) in gallons.

And:

8.3 corresponds to the weight in pounds of 1.0 gallon of water.

1.5 is a compensation factor that converts the static load of the stacking test into a load suitable for dynamic compression testing.

(d) *Criteria for passing the test.* No test sample may leak. In composite packagings or combination packagings,

there must be no leakage of the filling substance from the inner receptacle, or inner packaging. No test sample may show any deterioration which could adversely affect transportation safety or any distortion likely to reduce its strength, cause instability in stacks of packages, or cause damage to inner packagings likely to reduce safety in transportation. For the dynamic compression test, a container passes the test if, after application of the required load, there is no buckling of the sidewalls sufficient to cause damage to its expected contents; in no case may the maximum deflection exceed one inch.

[Amdt. 178–97, 55 FR 52723, Dec. 21, 1990, as amended at 56 FR 66286, Dec. 20, 1991; 57 FR 45465, Oct. 1, 1992; Amdt. 178–102, 59 FR 28494, June 2, 1994; Amdt. 178–106, 59 FR 67522, Dec. 29, 1994]

§ 178.607 Cooperage test for bung-type wooden barrels.

(a) *Number of samples.* One barrel is required for each different packaging.

(b) *Method of testing.* Remove all hoops above the bilge of an empty barrel at least two days old.

(c) *Criteria for passing the test.* A packaging passes the cooperage test only if the diameter of the cross-section of the upper part of the barrel does not increase by more than 10 percent.

§ 178.608 Vibration standard.

(a) Each packaging must be capable of withstanding, without rupture or leakage, the vibration test procedure outlined in this section.

(b) Test method. (1) Three sample packagings, selected at random, must be filled and closed as for shipment.

(2) The three samples must be placed on a vibrating platform that has a vertical or rotary double-amplitude (peak-to-peak displacement) of one inch. The packages should be constrained horizontally to prevent them from falling off the platform, but must be left free to move vertically, bounce and rotate.

(3) The test must be performed for one hour at a frequency that causes the package to be raised from the vibrating platform to such a degree that a piece of material of approximately 1.6 mm (0.063 inch) thickness (such as steel strapping or paperboard) can be passed between the bottom of any package and the platform.

(4) Immediately following the period of vibration, each package must be removed from the platform, turned on its side and observed for any evidence of leakage.

(5) Other methods, at least equally effective, may be used, if approved by the Associate Administrator for Hazardous Materials Safety.

(c) *Criteria for passing the test.* A packaging passes the vibration test if there is no rupture or leakage from any of the packages. No test sample should show any deterioration which could adversely affect transportation safety or any distortion liable to reduce packaging strength.

[Amdt. 178–97, 55 FR 52723, Dec. 21, 1990, as amended at 56 FR 66286, Dec. 20, 1991]

§ 178.609 Test requirements for packagings for infectious substances (etiologic agents).

(a) Samples of each packaging must be prepared for testing as described in paragraph (b) of this section and then subjected to the tests in paragraphs (d) through (i) of this section.

(b) Samples of each packaging must be prepared as for transport except that a liquid or solid infectious substance should be replaced by water or, where conditioning at −18 °C (0 °F) is specified, by water/antifreeze. Each primary receptacle must be filled to 98 percent capacity. Packagings for live animals should be tested with the live animal being replaced by an appropriate dummy of similar mass.

(c) Packagings prepared as for transport must be subjected to the tests in Table I of this paragraph, which, for test purposes, categorizes packagings according to their material characteristics. For outer packagings, the headings in Table I relate to fiberboard or similar materials whose performance may be rapidly affected by moisture; plastics, other than expanded plastics or film, which may embrittle at low temperature; and other materials such as metal whose performance is not significantly affected by moisture or temperature. Inner packagings may be of plastics, other than expanded plastics or film. Where a primary receptacle and a secondary packaging of an inner

packaging are made of different materials, the material of the primary receptacle determines the appropriate test.

TABLE I—TESTS REQUIRED

Material of					Tests required				
Outer packaging			Inner packaging		Refer to para. (d)				Refer to para. (h)
Fiberboard	Plastics	Other	Plastics	Other	(d)	(e)	(f)	(g)	
X			X			X	X	When dry ice is used	X
X				X		X			X
	X		X				X		X
	X			X			X		X
		X	X				X		X
		X		X	X				X

(d) Samples must be subjected to free-fall drops onto a rigid, nonresilient, flat, horizontal surface from a height of 9 m (30 feet).

The drops must be performed as follows:

(1) Where the samples are in the shape of a box, five must be dropped in sequence:

(i) Flat on the bottom;

(ii) Flat on the top;

(iii) Flat on the long side;

(iv) Flat on the short side; and

(v) On a corner.

(2) Where the samples are in the shape of a drum, three must be dropped in sequence:

(i) Diagonally on the top chime, with the center of gravity directly above the point of impact;

(ii) Diagonally on the base chime; and

(iii) Flat on the side.

(3) While the sample should be released in the required orientation, it is accepted that for aerodynamic reasons the impact may not take place in that orientation.

(4) Following the appropriate drop sequence, there must be no leakage from the primary receptacle(s) which should remain protected by absorbent material in the secondary packaging.

(e) The sample must be fully immersed in water for a period of at least 5 minutes and then allowed to drain for not more than 30 minutes at 23 °C (73 °F) and 50 ± 2 percent relative humidity. It should then be subjected to the test described in paragraph (d) of this section.

(f) The sample must be conditioned in an atmosphere of −18 °C (0 °F) or less for a period of at least 24 hours and within 15 minutes of removal from that atmosphere be subjected to the test described in paragraph (d) of this section. Where the sample contains dry ice, the conditioning period may be reduced to 4 hours.

(g) Where packaging is intended to contain dry ice, a test additional to that specified in paragraph (d) or (e) or (f) of this section must be carried out. One sample must be stored so that all the dry ice dissipates and then be subjected to the test described in paragraph (d) of this section.

(h) Packagings with a gross mass of 7 kg (15 pounds) or less should be subjected to the tests described in paragraph (h)(1) of this section and packagings with a gross mass exceeding 7 kg (15 pounds) to the tests in paragraph (h)(2) of this section.

(1) Samples must be placed on a level hard surface. A cylindrical steel rod with a mass of at least 7 kg (15 pounds), a diameter not exceeding 38 mm (1.5 inches) and the impact end edges a radius not exceeding 6 mm (0.2 inches), must be dropped in a vertical free fall from a height of 1 m (3 feet), measured from the impact end of the impact surface of the sample. One sample must be placed on its base. A second sample must be placed in an orientation perpendicular to that used for the first. In each instance the steel rod must be aimed to impact the primary receptacle. Following each impact, penetration of the secondary packaging is acceptable, provided that there is no leakage from the primary receptacle(s).

(2) Samples must be dropped on to the end of a cylindrical steel rod. The rod must be set vertically in a level hard surface. It must have a diameter of 38 mm (1.5 inches) and the edges of the upper end a radius not exceeding 6 mm (0.2 inches). The rod must protrude from the surface a distance at least equal to that between the primary receptacle(s) and the outer surface of the outer packaging with a minimum of 200 mm (7.9 inches). One sample must be dropped in a vertical free fall from a height of 1 m (3 feet), measured from the top of the steel rod. A second sample must be dropped from the same height in an orientation perpendicular to that used for the first. In each instance the packaging should be so orientated that the steel rod must be aimed to impact the primary receptacle(s). Following each impact, penetration of the secondary packaging is acceptable, provided that there is not leakage from the primary receptacle(s).

(i) Packagings subject to this section are not subject to §178.503 or any other requirements of this subpart, except §178.608.

[Amdt. 178–97, 55 FR 52723, Dec. 21, 1990, as amended by Amdt. 178–111, 60 FR 48787, Sept. 20, 1995]

Subpart N—Intermediate Bulk Container Performance-Oriented Standards

SOURCE: Amdt. 178–103, 59 FR 38068, July 26, 1994, unless otherwise noted.

§178.700 Purpose, scope and definitions.

(a) This subpart prescribes requirements applying to intermediate bulk containers intended for the transportation of hazardous materials. Standards for these packagings are based on the UN Recommendations.

(b) Terms used in this subpart are defined in §171.8 of this subchapter and in paragraph (c) of this section.

(c) The following definitions pertain to the intermediate bulk container standards in this subpart.

(1) *Body* means the receptacle proper (including openings and their closures, but not including service equipment), that has a volumetric capacity of not more than three cubic meters (3,000 liters, 793 gallons, or 106 cubic feet) and not less than 0.45 cubic meters (450 liters, 119 gallons, or 15.9 cubic feet) or a maximum net mass of not less than 400 kilograms (882) pounds.

(2) *Service equipment* means filling and discharge, pressure relief, safety, heating and heat-insulating devices and measuring instruments.

(3) *Structural equipment* means the reinforcing, fastening, handling, protective or stabilizing members of the body or stacking load bearing structural members (such as metal cages).

(4) *Maximum permissible gross mass* means the mass of the body, its service equipment, structural equipment and the maximum net mass (see §171.8 of this subchapter).

[Amdt. 178–103, 59 FR 38068, July 26, 1994, as amended by Amdt. 178–108, 60 FR 40038, Aug. 4, 1995]

§178.702 Intermediate bulk container identification codes.

(a) Intermediate bulk container code designations consist of: two numerals specified in paragraph (a)(1) of this section; followed by the capital letter(s) specified in paragraph (a)(2) of this section; followed, when specified in an individual section, by a numeral indicating the category of intermediate bulk container.

(1) Intermediate bulk container code number designations are as follows:

Type	For solids, discharged		For liquids
	by gravity	Under pressure of more than 10 kPa (1.45 psi)	
Rigid	11	21	31
Flexible	13		

(2) Intermediate bulk container code letter designations are as follows:

''A'' means steel (all types and surface treatments).
''B'' means aluminum.
''C'' means natural wood.
''D'' means plywood.
''F'' means reconstituted wood.
''G'' means fiberboard.
''H'' means plastic.
''L'' means textile.
''M'' means paper, multiwall.

''N'' means metal (other than steel or aluminum).

(b) For composite intermediate bulk containers, two capital letters are used in sequence following the numeral indicating intermediate bulk container design type. The first letter indicates the material of the intermediate bulk container inner receptacle. The second letter indicates the material of the outer intermediate bulk container. For example, 31HA1 is a composite intermediate bulk container with a plastic inner receptacle and a steel outer packaging.

§ 178.703 Marking of intermediate bulk containers.

(a) The manufacturer shall:

(1) Mark every intermediate bulk container in a durable and clearly visible manner (applied in a single line or in multiple lines provided the correct sequence is followed) with the following information in the sequence presented:

(i) The United Nations symbol as illustrated in § 178.503(d)(1). For metal intermediate bulk containers on which the marking is stamped or embossed, the capital letters 'UN' may be applied instead of the symbol.

(ii) The code number designating intermediate bulk container design type according to § 178.702(a) (1) and (2).

(iii) A capital letter identifying the performance standard under which the design type has been successfully tested, as follows:

(A) X—for intermediate bulk containers meeting Packing Group I, II and III tests;

(B) Y—for intermediate bulk containers meeting Packing Group II and III tests; and

(C) Z—for intermediate bulk containers meeting only Packing Group III tests.

(iv) The month (designated numerically) and year (last two digits) of manufacture.

(v) The country authorizing the allocation of the mark. The letters 'USA' indicate that the intermediate bulk container is manufactured and marked in the United States in compliance with the provisions of this subchapter.

(vi) The name and address or symbol of the manufacturer or the approval agency certifying compliance with subparts N and O of this part. Symbols, if used, must be registered with the Associate Administrator for Hazardous Materials Safety.

(vii) The stacking test load in kilograms (kg). For intermediate bulk containers not designed for stacking, the figure ''0'' must be shown.

(viii) The maximum permissible gross mass or, for flexible intermediate bulk containers, the maximum net mass, in kg.

(2) The following are examples of symbols and required markings:

(i) For a metal intermediate bulk container containing solids discharged by gravity made from steel:

11A/Y/02 92/USA/ABC/5500/1500

(ii) For a flexible intermediate bulk container containing solids discharged by gravity and made from woven plastic with a liner:

13H3/Z/03 92/USA/ABC/0/1500

(iii) For a rigid plastic intermediate bulk container containing liquids, made from plastic with structural equipment withstanding the stack load and with a manufacturer's symbol in place of the manufacturer's name and address:

31H1/Y/04 93/USA/M9399/10800/1200

(iv) For a composite intermediate bulk container containing liquids, with a rigid plastic inner receptacle and an outer steel body and with the symbol of a DOT approved third-party test laboratory:

31HA1/Y/05 93/USA/+ZT1235/10800/1200

(b) *Additional marking.* In addition to markings required in paragraph (a) of this section, each intermediate bulk container must be marked as follows in a place near the markings required in paragraph (a) of this section that is readily accessible for inspection. Where units of measure are used, the metric unit indicated (e.g., 450 liters) must also appear.

(1) For each rigid plastic and composite intermediate bulk container, the following markings must be included:

(i) Rated capacity in liters of water at 20 °C (68 °F);

(ii) Tare mass in kilograms;

(iii) Gauge test pressure in kPa;

(iv) Date of last leakproofness test, if applicable (month and year); and

(v) Date of last inspection (month and year).

(2) For each metal intermediate bulk container, the following markings must be included on a metal corrosion-resistant plate:

(i) Rated capacity in liters of water at 20 °C (68 °F);

(ii) Tare mass in kilograms;

(iii) Date of last leakproofness test, if applicable (month and year);

(iv) Date of last inspection (month and year);

(v) Maximum loading/discharge pressure, in kPa, if applicable;

(vi) Body material and its minimum thickness in mm; and

(vii) Serial number assigned by the manufacturer.

(3) Markings required by paragraph (b)(1) or (b)(2) of this section may be preceded by the narrative description of the marking, e.g. ''Tare Mass: * * *''

where the ''* * *'' are replaced with the tare mass in kilograms of the intermediate bulk container.

(4) For each fiberboard and wooden intermediate bulk container, the tare mass in kg must be shown.

(5) Each flexible intermediate bulk container may be marked with a pictogram displaying recommended lifting methods.

(6) For each composite intermediate bulk container, the inner receptacle must be marked with at least the following information:

(i) The code number designating the intermediate bulk container design type, the name and address or symbol of the manufacturer, the date of manufacture and the country authorizing the allocation of the mark as specified in paragraph (a) of this section;

(ii) Where the outer casing of a composite intermediate bulk container can be dismantled, each of the detachable parts must be marked with the month and year of manufacture and the name or symbol of the manufacturer.

[Amdt. 178–103, 59 FR 38068, July 26, 1994, as amended by Amdt. 178–119, 62 FR 24743, May 6, 1997]

§ 178.704 General intermediate bulk container standards.

(a) Each intermediate bulk container must be resistant to, or protected from, deterioration due to exposure to the external environment. Intermediate bulk containers intended for solid hazardous materials must be sift-proof and water-resistant.

(b) All service equipment must be so positioned or protected as to minimize potential loss of contents resulting from damage during intermediate bulk container handling and transportation.

(c) Each intermediate bulk container, including attachments, and service and structural equipment, must be designed to withstand, without loss of hazardous materials, the internal pressure of the contents and the stresses of normal handling and transport. An intermediate bulk container intended for stacking must be designed for stacking. Any lifting or securing features of an intermediate bulk container must be of sufficient strength to withstand the normal conditions of handling and transportation without gross distortion or failure and must be positioned so as to cause no undue stress in any part of the intermediate bulk container.

(d) An intermediate bulk container consisting of a packaging within a framework must be so constructed that:

(1) The body is not damaged by the framework;

(2) The body is retained within the framework at all times; and

(3) The service and structural equipment are fixed in such a way that they cannot be damaged if the connections between body and frame allow relative expansion or movement.

(e) Bottom discharge valves must be secured in the closed position and the discharge system suitably protected from damage. Valves having lever closures must be secured against accidental opening. The open or closed position of each valve must be readily apparent. For each intermediate bulk container containing a liquid, a secondary means of sealing the discharge aperture must also be provided, e.g., by a blank flange or equivalent device.

(f) Intermediate bulk container design types must be constructed in such a way as to be bottom-lifted or top-lifted as specified in §§ 178.811 and 178.812.

§ 178.705 Standards for metal intermediate bulk containers.

(a) The provisions in this section apply to metal intermediate bulk containers intended to contain liquids and solids. Metal intermediate bulk container types are designated:

(1) 11A, 11B, 11N for solids that are loaded or discharged by gravity.

(2) 21A, 21B, 21N for solids that are loaded or discharged at a gauge pressure greater than 10 kPa (1.45 psig).

(3) 31A, 31B, 31N for liquids or solids.

(b) Definitions for metal intermediate bulk containers:

(1) *Metal intermediate bulk container* means an intermediate bulk container with a metal body, together with appropriate service and structural equipment.

(2) *Protected* means providing the intermediate bulk container body with additional external protection against impact and abrasion. For example, a multi-layer (sandwich) or double wall

construction or a frame with a metal lattice-work casing.

(c) Construction requirements for metal intermediate bulk containers are as follows:

(1) *Body*. The body must be made of ductile metal materials. Welds must be made so as to maintain design type integrity of the receptacle under conditions normally incident to transportation.

(i) The use of dissimilar metals must not result in deterioration that could affect the integrity of the body.

(ii) Aluminum intermediate bulk containers intended to contain flammable liquids must have no movable parts, such as covers and closures, made of unprotected steel liable to rust, which might cause a dangerous reaction from friction or percussive contact with the aluminum.

(iii) Metals used in fabricating the body of a metal intermediate bulk container must meet the following requirements:

(A) For steel, the percentage elongation at fracture must not be less than 10,000/Rm with a minimum of 20 percent; where Rm = minimum tensile strength of the steel to be used, in N/mm^2; if U.S. Standard units of pounds per square inch are used for tensile strength then the ratio becomes 10,000 × (145/Rm).

(B) For aluminum, the percentage elongation at fracture must not be less than 10,000/(6Rm) with an absolute minimum of eight percent; if U.S. Standard units of pounds per square inch are used for tensile strength then the ratio becomes 10,000 x 145/(6Rm).

(C) Specimens used to determine the elongation at fracture must be taken transversely to the direction of rolling and be so secured that:

$Lo = 5d$

or

$Lo = 5.65 \sqrt{A}$

where: Lo = gauge length of the specimen before the test

d = diameter

A = cross-sectional area of test specimen.

(iv) Minimum wall thickness:

(A) For a reference steel having a product of Rm × Ao = 10,000, where Ao = minimum elongation (as a percentage) of the reference steel to be used on fracture under tensile stress, (Rm × Ao = 10,000 × 145; if tensile strength is in U.S. Standard units of pounds per square inch) the wall thickness must not be less than:

Capacity in liters [1]	Wall thickness in mm (inches)			
	Types 11A, 11B, 11N		Types 21A, 21B, 21N, 31A, 31B, 31N	
	Unprotected	Protected	Unprotected	Protected
>450 and ≦1000	2.0 (0.079)	1.5 (0.059)	2.5 (0.098)	2.0 (0.079)
>1000 and ≦2000	2.5 (0.098)	2.0 (0.079)	3.0 (0.118)	2.5 (0.098)
>2000 and ≦3000	3.0 (0.118)	2.5 (0.098)	4.0 (0.157)	3.0 (0.118)

[1] Where: gallons = liters × 0.264.

(B) For metals other than the reference steel described in paragraph (c)(1)(iii)(A) of this section, the minimum wall thickness is the greater of 1.5 mm (0.059 inches) or as determined by use of the following equivalence formula:

Formula for Metric Units

$$e_1 = \frac{21.4 \times e_0}{\sqrt[3]{Rm_1 \times A_1}}$$

Formula for U.S. Standard Units

$$e_1 = \frac{21.4 \times e_0}{\sqrt[3]{(Rm_1 \times A_1)/145}}$$

where:

e_1 =required equivalent wall thickness of the metal to be used (in mm or if e_o is in inches, use formula for U.S. Standard units).

e_o = required minimum wall thickness for the reference steel (in mm or if e_o is in inches, use formula for U.S. Standard units).

Rm_1 = guaranteed minimum tensile strength of the metal to be used (in N/mm^2 or for U.S. Standard units, use pounds per square inch).

A_1 = minimum elongation (as a percentage) of the metal to be used on fracture under tensile stress (see paragraph (c)(1) of this section).

(2) *Pressure relief.* The following pressure relief requirements apply to intermediate bulk containers intended for liquids:

(i) Intermediate bulk containers must be capable of releasing a sufficient amount of vapor in the event of fire engulfment to ensure that no rupture of the body will occur due to pressure build-up. This can be achieved by spring-loaded or frangible pressure relief devices or by other means of construction.

(ii) The start-to-discharge pressure may not be higher than 65 kPa (9 psig) and no lower than the vapor pressure of the hazardous material plus the partial pressure of the air or other inert gases, measured in the intermediate bulk container at 55 °C (131 °F), determined on the basis of a maximum degree of filling as specified in § 173.35(d) of this subchapter. This does not apply to fusible devices unless such devices are the only source of pressure relief for the IBC. Pressure relief devices must be fitted in the vapor space.

[Amdt. 178–103, 59 FR 38068, July 26, 1994, as amended by Amdt. 178–108, 60 FR 40038, Aug. 4, 1995; Amdt. 178–117, 61 FR 50629, Sept. 26, 1996]

§ 178.706 Standards for rigid plastic intermediate bulk containers.

(a) The provisions in this section apply to rigid plastic intermediate bulk containers intended to contain solids or liquids. Rigid plastic intermediate bulk container types are designated:

(1) 11H1 fitted with structural equipment designed to withstand the whole load when intermediate bulk containers are stacked, for solids which are loaded or discharged by gravity.

(2) 11H2 freestanding, for solids which are loaded or discharged by gravity.

(3) 21H1 fitted with structural equipment designed to withstand the whole load when intermediate bulk containers are stacked, for solids which are loaded or discharged under pressure.

(4) 21H2 freestanding, for solids which are loaded or discharged under pressure.

(5) 31H1 fitted with structural equipment designed to withstand the whole load when intermediate bulk containers are stacked, for liquids.

(6) 31H2 freestanding, for liquids.

(b) Rigid plastic intermediate bulk containers consist of a rigid plastic body, which may have structural equipment, together with appropriate service equipment.

(c) Rigid plastic intermediate bulk containers must be manufactured from plastic material of known specifications and be of a strength relative to its capacity and to the service it is required to perform. In addition to conformance to § 173.24 of this subchapter, plastic materials must be resistant to aging and to degradation caused by ultraviolet radiation.

(1) If protection against ultraviolet radiation is necessary, it must be provided by the addition of a pigment or inhibiter such as carbon black. These additives must be compatible with the contents and remain effective throughout the life of the intermediate bulk container body. Where use is made of carbon black, pigments or inhibitors, other than those used in the manufacture of the tested design type, retesting may be omitted if changes in the carbon black content, the pigment content or the inhibitor content do not adversely affect the physical properties of the material of construction.

(2) Additives may be included in the composition of the plastic material to improve the resistance to aging or to serve other purposes, provided they do

not adversely affect the physical or chemical properties of the material of construction.

(3) No used material other than production residues or regrind from the same manufacturing process may be used in the manufacture of rigid plastic intermediate bulk containers.

(4) Rigid plastic intermediate bulk containers intended for the transportation of liquids must be capable of releasing a sufficient amount of vapor to prevent the body of the intermediate bulk container from rupturing if it is subjected to an internal pressure in excess of that for which it was hydraulically tested. This may be achieved by spring-loaded or frangible pressure relief devices or by other means of construction.

§178.707 Standards for composite intermediate bulk containers.

(a) The provisions in this section apply to:

(1) Composite intermediate bulk containers intended to contain solids and liquids. Composite intermediate bulk container types are designated:

(i) 11HZ1 Composite intermediate bulk containers with a rigid plastic inner receptacle for solids loaded or discharged by gravity.

(ii) 11HZ2 Composite intermediate bulk containers with a flexible plastic inner receptacle for solids loaded or discharged by gravity.

(iii) 21HZ1 Composite intermediate bulk containers with a rigid plastic inner receptacle for solids loaded or discharged under pressure.

(iv) 21HZ2 Composite intermediate bulk containers with a flexible plastic inner receptacle for solids loaded or discharged under pressure.

(v) 31HZ1 Composite intermediate bulk containers with a rigid plastic inner receptacle for liquids.

(vi) 31HZ2 Composite intermediate bulk containers with a flexible plastic inner receptacle for liquids.

(2) The marking code in paragraph (a)(1) of this section must be completed by replacing the letter Z by a capital letter in accordance with §178.702(a)(2) to indicate the material used for the outer packaging.

(b) Definitions for composite intermediate bulk container types:

(1) A *composite intermediate bulk container* is an intermediate bulk container which consists of a rigid outer packaging enclosing a plastic inner receptacle together with any service or other structural equipment. The outer packaging of a composite intermediate bulk container is designed to bear the entire stacking load. The inner receptacle and outer packaging form an integral packaging and are filled, stored, transported, and emptied as a unit.

(2) The term plastic means polymeric materials (i.e., plastic or rubber).

(3) A ''rigid'' inner receptacle is an inner receptacle which retains its general shape when empty without closures in place and without benefit of the outer casing. Any inner receptacle that is not ''rigid'' is considered to be ''flexible.''

(c) Construction requirements for composite intermediate bulk containers with plastic inner receptacles are as follows:

(1) The outer packaging must consist of rigid material formed so as to protect the inner receptacle from physical damage during handling and transportation, but is not required to perform the secondary containment function. It includes the base pallet where appropriate. The inner receptacle is not intended to perform a containment function without the outer packaging.

(2) A composite intermediate bulk container with a fully enclosing outer packaging must be designed to permit assessment of the integrity of the inner container following the leakproofness and hydraulic tests. The outer packaging of 31HZ2 composite intermediate bulk containers must enclose the inner receptacles on all sides.

(3) The inner receptacle must be manufactured from plastic material of known specifications and be of a strength relative to its capacity and to the service it is required to perform. In addition to conformance with the requirements of §173.24 of this subchapter, the material must be resistant to aging and to degradation caused by ultraviolet radiation. The inner receptacle of 31HZ2 composite intermediate bulk containers must consist of at least three plies of film.

(i) If necessary, protection against ultraviolet radiation must be provided

by the addition of pigments or inhibitors such as carbon black. These additives must be compatible with the contents and remain effective throughout the life of the inner receptacle. Where use is made of carbon black, pigments, or inhibitors, other than those used in the manufacture of the tested design type, retesting may be omitted if the carbon black content, the pigment content, or the inhibitor content do not adversely affect the physical properties of the material of construction.

(ii) Additives may be included in the composition of the plastic material of the inner receptacle to improve resistance to aging, provided they do not adversely affect the physical or chemical properties of the material.

(iii) No used material other than production residues or regrind from the same manufacturing process may be used in the manufacture of inner receptacles.

(iv) Composite intermediate bulk containers intended for the transportation of liquids must be capable of releasing a sufficient amount of vapor to prevent the body of the intermediate bulk container from rupturing if it is subjected to an internal pressure in excess of that for which it was hydraulically tested. This may be achieved by spring-loaded or frangible pressure relief devices or by other means of construction.

(4) The strength of the construction material comprising the outer packaging and the manner of construction must be appropriate to the capacity of the composite intermediate bulk container and its intended use. The outer packaging must be free of any projection that might damage the inner receptacle.

(i) Outer packagings of natural wood must be constructed of well seasoned wood that is commercially dry and free from defects that would materially lessen the strength of any part of the outer packaging. The tops and bottoms may be made of water-resistant reconstituted wood such as hardboard or particle board. Materials other than natural wood may be used for construction of structural equipment of the outer packaging.

(ii) Outer packagings of plywood must be made of well-seasoned, rotary cut, sliced, or sawn veneer, commercially dry and free from defects that would materially lessen the strength of the casing. All adjacent plies must be glued with water-resistant adhesive. Materials other than plywood may be used for construction of structural equipment of the outer packaging. Outer packagings must be firmly nailed or secured to corner posts or ends or be assembled by equally suitable devices.

(iii) Outer packagings of reconstituted wood must be constructed of water-resistant reconstituted wood such as hardboard or particle board. Materials other than reconstituted wood may be used for the construction of structural equipment of reconstituted wood outer packaging.

(iv) Fiberboard outer packagings must be constructed of strong, solid, or double-faced corrugated fiberboard (single or multiwall).

(A) Water resistance of the outer surface must be such that the increase in mass, as determined in a test carried out over a period of 30 minutes by the Cobb method of determining water absorption, is not greater than 155 grams per square meter (0.0316 pounds per square foot—see ISO International Standard 535–1976 (E)). Fiberboard must have proper bending qualities. Fiberboard must be cut, creased without cutting through any thickness of fiberboard, and slotted so as to permit assembly without cracking, surface breaks, or undue bending. The fluting of corrugated fiberboard must be firmly glued to the facings.

(B) The ends of fiberboard outer packagings may have a wooden frame or be constructed entirely of wood. Wooden battens may be used for reinforcements.

(C) Manufacturers' joints in the bodies of outer packagings must be taped, lapped and glued, or lapped and stitched with metal staples.

(D) Lapped joints must have an appropriate overlap.

(E) Where closing is effected by gluing or taping, a water-resistant adhesive must be used.

(F) All closures must be sift-proof.

(v) Outer packagings of plastic materials must be constructed in accordance with the relevant provisions of paragraph (c)(3) of this section.

(5) Any integral pallet base forming part of an intermediate bulk container, or any detachable pallet, must be suitable for the mechanical handling of an intermediate bulk container filled to its maximum permissible gross mass.

(i) The pallet or integral base must be designed to avoid protrusions that may cause damage to the intermediate bulk container in handling.

(ii) The outer packaging must be secured to any detachable pallet to ensure stability in handling and transportation. Where a detachable pallet is used, its top surface must be free from sharp protrusions that might damage the intermediate bulk container.

(iii) Strengthening devices, such as timber supports to increase stacking performance, may be used but must be external to the inner receptacle.

(iv) The load-bearing surfaces of intermediate bulk containers intended for stacking must be designed to distribute loads in a stable manner. An intermediate bulk container intended for stacking must be designed so that loads are not supported by the inner receptacle.

(6) Intermediate IBCs of type 31HZ2 must be limited to a capacity of not more than 1,250 liters.

[Amdt. 178–103, 59 FR 38068, July 26, 1994, as amended by Amdt. 178–119, 62 FR 24743, May 6, 1997]

§ 178.708 Standards for fiberboard intermediate bulk containers.

(a) The provisions of this section apply to fiberboard intermediate bulk containers intended to contain solids that are loaded or discharged by gravity. Fiberboard intermediate bulk containers are designated: 11G.

(b) Definitions for fiberboard intermediate bulk container types:

(1) *Fiberboard intermediate bulk containers* consist of a fiberboard body with or without separate top and bottom caps, appropriate service and structural equipment, and if necessary an inner liner (but no inner packaging).

(2) *Liner* means a separate tube or bag, including the closures of its openings, inserted in the body but not forming an integral part of it.

(c) Construction requirements for fiberboard intermediate bulk containers are as follows:

(1) Top lifting devices are prohibited in fiberboard intermediate bulk containers.

(2) Fiberboard intermediate bulk containers must be constructed of strong, solid or double-faced corrugated fiberboard (single or multiwall) that is appropriate to the capacity of the outer packaging and its intended use. Water resistance of the outer surface must be such that the increase in mass, as determined in a test carried out over a period of 30 minutes by the Cobb method of determining water absorption, is not greater than 155 grams per square meter (0.0316 pounds per square foot see ISO 535–1976(E)). Fiberboard must have proper bending qualities. Fiberboard must be cut, creased without cutting through any thickness of fiberboard, and slotted so as to permit assembly without cracking, surface breaks, or undue bending. The fluting of corrugated fiberboard must be firmly glued to the facings.

(i) The walls, including top and bottom, must have a minimum puncture resistance of 15 Joules (11 foot-pounds of energy) measured according to ISO 3036, incorporated by reference in § 171.7 of this subchapter.

(ii) Manufacturers' joints in the bodies of intermediate bulk containers must be made with an appropriate overlap and be taped, glued, stitched with metal staples or fastened by other means at least equally effective. Where joints are made by gluing or taping, a water-resistant adhesive must be used. Metal staples must pass completely through all pieces to be fastened and be formed or protected so that any inner liner cannot be abraded or punctured by them.

(3) The strength of the material used and the construction of the liner must be appropriate to the capacity of the intermediate bulk container and the intended use. Joints and closures must be sift-proof and capable of withstanding pressures and impacts liable to occur under normal conditions of handling and transport.

(4) Any integral pallet base forming part of an intermediate bulk container, or any detachable pallet, must be suitable for the mechanical handling of an intermediate bulk container filled to its maximum permissible gross mass.

(i) The pallet or integral base must be designed to avoid protrusions that may cause damage to the intermediate bulk container in handling.

(ii) The outer packaging must be secured to any detachable pallet to ensure stability in handling and transport. Where a detachable pallet is used, its top surface must be free from sharp protrusions that might damage the intermediate bulk container.

(iii) Strengthening devices, such as timber supports to increase stacking performance, may be used but must be external to the inner liner.

(iv) The load-bearing surfaces of intermediate bulk containers intended for stacking must be designed to distribute loads in a stable manner.

§ 178.709 Standards for wooden intermediate bulk containers.

(a) The provisions in this section apply to wooden intermediate bulk containers intended to contain solids that are loaded or discharged by gravity. Wooden intermediate bulk container types are designated:

(1) 11C Natural wood with inner liner.

(2) 11D Plywood with inner liner.

(3) 11F Reconstituted wood with inner liner.

(b) Definitions for wooden intermediate bulk containers:

(1) *Wooden intermediate bulk containers* consist of a rigid or collapsible wooden body together with an inner liner (but no inner packaging) and appropriate service and structural equipment.

(2) *Liner* means a separate tube or bag, including the closures of its openings, inserted in the body but not forming an integral part of it.

(c) Construction requirements for wooden intermediate bulk containers are as follows:

(1) Top lifting devices are prohibited in wooden intermediate bulk containers.

(2) The strength of the materials used and the method of construction must be appropriate to the capacity and intended use of the intermediate bulk container.

(i) Natural wood used in the construction of an intermediate bulk container must be well-seasoned, commercially dry, and free from defects that would materially lessen the strength of any part of the intermediate bulk container. Each intermediate bulk container part must consist of uncut wood or a piece equivalent in strength and integrity. Intermediate bulk container parts are equivalent to one piece when a suitable method of glued assembly is used (i.e., a Lindermann joint, tongue and groove joint, ship lap or rabbet joint, or butt joint with at least two corrugated metal fasteners at each joint, or when other methods at least equally effective are used). Materials other than natural wood may be used for the construction of structural equipment of the outer packaging.

(ii) Plywood used in construction of bodies must be at least 3-ply. Plywood must be made of well-seasoned, rotary-cut, sliced or sawn veneer, commercially dry, and free from defects that would materially lessen the strength of the body. All adjacent plies must be glued with water-resistant adhesive. Materials other than plywood may be used for the construction of structural equipment of the outer packaging.

(iii) Reconstituted wood used in construction of bodies must be water resistant reconstituted wood such as hardboard or particle board. Materials other than reconstituted wood may be used for the construction of structural equipment of the outer packaging.

(iv) Wooden intermediate bulk containers must be firmly nailed or secured to corner posts or ends or be assembled by similar devices.

(3) The strength of the material used and the construction of the liner must be appropriate to the capacity of the intermediate bulk container and its intended use. Joints and closures must be sift-proof and capable of withstanding pressures and impacts liable to occur under normal conditions of handling and transportation.

(4) Any integral pallet base forming part of an intermediate bulk container, or any detachable pallet, must be suitable for the mechanical handling of an

intermediate bulk container filled to its maximum permissible gross mass.

(i) The pallet or integral base must be designed to avoid protrusions that may cause damage to the intermediate bulk container in handling.

(ii) The outer packaging must be secured to any detachable pallet to ensure stability in handling and transportation. Where a detachable pallet is used, its top surface must be free from sharp protrusions that might damage the intermediate bulk container.

(iii) Strengthening devices, such as timber supports to increase stacking performance, may be used but must be external to the inner liner.

(iv) The load-bearing surfaces of intermediate bulk containers intended for stacking must be designed to distribute loads in a stable manner.

§178.710 Standards for flexible intermediate bulk containers.

(a) The provisions of this section apply to flexible intermediate bulk containers intended to contain solid hazardous materials. Flexible intermediate bulk container types are designated:

(1) 13H1 woven plastic without coating or liner.

(2) 13H2 woven plastic, coated.

(3) 13H3 woven plastic with liner.

(4) 13H4 woven plastic, coated and with liner.

(5) 13H5 plastic film.

(6) 13L1 textile without coating or liner.

(7) 13L2 textile, coated.

(8) 13L3 textile with liner.

(9) 13L4 textile, coated and with liner.

(10) 13M1 paper, multiwall.

(11) 13M2 paper, multiwall, water resistant.

(b) Definitions for flexible intermediate bulk containers:

(1) *Flexible intermediate bulk containers* consist of a body constructed of film, woven plastic, woven fabric, paper, or combination thereof, together with any appropriate service equipment and handling devices, and if necessary, an inner coating or liner.

(2) *Woven plastic* means a material made from stretched tapes or monofilaments.

(3) *Handling device* means any sling, loop, eye, or frame attached to the body of the intermediate bulk container or formed from a continuation of the intermediate bulk container body material.

(c) Construction requirements for flexible intermediate bulk containers are as follows:

(1) The strength of the material and the construction of the flexible intermediate bulk container must be appropriate to its capacity and its intended use.

(2) All materials used in the construction of flexible intermediate bulk containers of types 13M1 and 13M2 must, after complete immersion in water for not less than 24 hours, retain at least 85 percent of the tensile strength as measured originally on the material conditioned to equilibrium at 67 percent relative humidity or less.

(3) Seams must be stitched or formed by heat sealing, gluing or any equivalent method. All stitched seam-ends must be secured.

(4) In addition to conformance with the requirements of §173.24 of this subchapter, flexible intermediate bulk containers must be resistant to aging and degradation caused by ultraviolet radiation.

(5) For plastic flexible intermediate bulk containers, if necessary, protection against ultraviolet radiation must be provided by the addition of pigments or inhibitors such as carbon black. These additives must be compatible with the contents and remain effective throughout the life of the container. Where use is made of carbon black, pigments, or inhibitors, other than those used in the manufacture of the tested design type, retesting may be omitted if the carbon black content, the pigment content or the inhibitor content does not adversely affect the physical properties of the material of construction. Additives may be included in the composition of the plastic material to improve resistance to aging, provided they do not adversely affect the physical or chemical properties of the material.

(6) No used material other than production residues or regrind from the same manufacturing process may be used in the manufacture of plastic

flexible intermediate bulk containers. This does not preclude the re-use of component parts such as fittings and pallet bases, provided such components have not in any way been damaged in previous use.

(7) When flexible intermediate bulk containers are filled, the ratio of height to width may not be more than 2:1.

[Amdt. 178–103, 59 FR 38068, July 26, 1994, as amended by Amdt. 178–108, 60 FR 40038, Aug. 4, 1995]

Subpart O—Testing of Intermediate Bulk Containers

SOURCE: Amdt. 178–103, 59 FR 38074, July 26, 1994, unless otherwise noted.

§ 178.800 Purpose and scope.

This subpart prescribes certain testing requirements for intermediate bulk containers identified in subpart N of this part.

§ 178.801 General requirements.

(a) *General.* The test procedures prescribed in this subpart are intended to ensure that intermediate bulk containers containing hazardous materials can withstand normal conditions of transportation and are considered minimum requirements. Each packaging must be manufactured and assembled so as to be capable of successfully passing the prescribed tests and of conforming to the requirements of § 173.24 of this subchapter at all times while in transportation.

(b) *Responsibility.* It is the responsibility of the intermediate bulk container manufacturer to assure that each intermediate bulk container is capable of passing the prescribed tests. To the extent that an intermediate bulk container assembly function, including final closure, is performed by the person who offers a hazardous material for transportation, that person is responsible for performing the function in accordance with §§ 173.22 and 178.2 of this subchapter.

(c) *Definitions.* For the purpose of this subpart:

(1) *Intermediate bulk container design type* refers to intermediate bulk container which does not differ in structural design, size, material of construction, wall thickness, manner of construction and representative service equipment.

(2) *Design qualification testing* is the performance of the drop, leakproofness, hydrostatic pressure, stacking, bottom-lift or top-lift, tear, topple, righting and vibration tests, as applicable, prescribed in this subpart, for each different intermediate bulk container design type, at the start of production of that packaging.

(3) *Periodic design requalification test* is the performance of the applicable tests specified in paragraph (c)(2) of this section on an intermediate bulk container design type, in order to requalify the design for continued production at the frequency specified in paragraph (e) of this section.

(4) *Production inspection* is the inspection that must initially be conducted on each newly manufactured intermediate bulk container.

(5) *Production testing* is the performance of the leakproofness test in accordance with paragraph (f) of this section on each intermediate bulk container intended to contain solids discharged by pressure or intended to contain liquids.

(6) *Periodic retest and inspection* is performance of the applicable test and inspections on each intermediate bulk container at the frequency specified in § 180.352 of this subchapter.

(7) *Different intermediate bulk container design type* is one that differs from a previously qualified intermediate bulk container design type in structural design, size, material of construction, wall thickness, or manner of construction, but does not include:

(i) A packaging which differs in surface treatment;

(ii) A rigid plastic intermediate bulk container or composite intermediate bulk container which differs with regard to additives used to comply with §§ 178.706(c), 178.707(c) or 178.710(c);

(iii) A packaging which differs only in its lesser external dimensions (i.e., height, width, length) provided materials of construction and material thicknesses or fabric weight remain the same;

(iv) A packaging which differs in service equipment.

(d) *Design qualification testing.* The packaging manufacturer shall achieve successful test results for the design qualification testing at the start of production of each new or different intermediate bulk container design type. The service equipment selected for this design qualification testing shall be representative of the type of service equipment that will be fitted to any finished intermediate bulk container body under the design. Application of the certification mark by the manufacturer shall constitute certification that the intermediate bulk container design type passed the prescribed tests in this subpart.

(e) *Periodic design requalification testing.* (1) Periodic design requalification must be conducted on each qualified intermediate bulk container design type if the manufacturer is to maintain authorization for continued production. The intermediate bulk container manufacturer shall achieve successful test results for the periodic design requalification at sufficient frequency to ensure each packaging produced by the manufacturer is capable of passing the design qualification tests. Design requalification tests must be conducted at least once every 12 months.

(2) Changes in the frequency of design requalification testing specified in paragraph (e)(1) of this section are authorized if approved by the Associate Administrator for Hazardous Materials Safety. These requests must be based on:

(i) Detailed quality assurance programs that assure that proposed decreases in test frequency maintain the integrity of originally tested intermediate bulk container design types; and

(ii) Demonstrations that each intermediate bulk container produced is capable of withstanding higher standards (e.g., increased drop height, hydrostatic pressure, wall thickness, fabric weight).

(f) *Production testing and inspection.* (1) Production testing consists of the leakproofness test prescribed in § 178.813 of this subpart and must be performed on each intermediate bulk container intended to contain solids discharged by pressure or intended to contain liquids. For this test:

(i) The intermediate bulk container need not have its closures fitted.

(ii) The inner receptacle of a composite intermediate bulk container may be tested without the outer intermediate bulk container body, provided the test results are not affected.

(2) Applicable inspection requirements in § 180.352 of this subchapter must be performed on each intermediate bulk container initially after production.

(g) *Test samples.* The intermediate bulk container manufacturer shall conduct the design qualification and periodic design requalification tests prescribed in this subpart using random samples of intermediate bulk containers, according to the appropriate test section.

(h) *Selective testing of intermediate bulk containers.* Variation of a tested intermediate bulk container design type is permitted without further testing, provided selective testing demonstrates an equivalent or greater level of safety than the design type tested and which has been approved by the Associate Administrator for Hazardous Materials Safety.

(i) *Approval of equivalent packagings.* An intermediate bulk container which differs from the standards in subpart N of this part, or which is tested using methods other than those specified in this subpart, may be used if approved by the Associate Administrator for Hazardous Materials Safety. Such intermediate bulk containers must be shown to be equally effective, and testing methods used must be equivalent.

(j) *Proof of compliance.* Notwithstanding the periodic design requalification testing intervals specified in paragraph (e) of this section, the Associate Administrator for Hazardous Materials Safety, or a designated representative, may at any time require demonstration of compliance by a manufacturer, through testing in accordance with this subpart, that packagings meet the requirements of this subpart. As required by the Associate Administrator for Hazardous Materials Safety, or a designated representative, the manufacturer shall either:

(1) Conduct performance tests or have tests conducted by an independent testing facility, in accordance with this subpart; or

(2) Make a sample intermediate bulk container available to the Associate Administrator for Hazardous Materials Safety, or a designated representative, for testing in accordance with this subpart.

(k) *Coatings.* If an inner treatment or coating of an intermediate bulk container is required for safety reasons, the manufacturer shall design the intermediate bulk container so that the treatment or coating retains its protective properties even after withstanding the tests prescribed by this subpart.

(l) *Record retention.* (1) The person who certifies an intermediate bulk container design type shall keep records of design qualification tests for each intermediate bulk container design type and for each periodic design requalification as specified in this part. These records must be maintained at each location where the intermediate bulk container is manufactured and at each location where design qualification and periodic design requalification testing is performed. These records must be maintained for as long as intermediate bulk containers are manufactured in accordance with each qualified design type and for at least 2.5 years thereafter. These records must include the following information: name and address of test facility; name and address of the person certifying the intermediate bulk container; a unique test report identification; date of test report; manufacturer of the intermediate bulk container; description of the intermediate bulk container design type (e.g., dimensions, materials, closures, thickness, representative service equipment, etc.); maximum intermediate bulk container capacity; characteristics of test contents; test descriptions and results (including drop heights, hydrostatic pressures, tear propagation length, etc.). Each test report must be signed with the name of the person conducting the test, and name of the person responsible for testing.

(2) The person who certifies each intermediate bulk container must make all records of design qualification tests and periodic design requalification tests available for inspection by a representative of the Department upon request.

[Amdt. 178–103, 59 FR 38074, July 26, 1994, as amended by Amdt. 178–108, 60 FR 40038, Aug. 4, 1995]

§ 178.802 Preparation of fiberboard intermediate bulk containers for testing.

(a) Fiberboard intermediate bulk containers and composite intermediate bulk containers with fiberboard outer packagings must be conditioned for at least 24 hours in an atmosphere maintained:

(1) At 50 percent ± 2 percent relative humidity, and at a temperature of 23° ± 2 °C (73°F ± 4 °F); or

(2) At 65 percent ± 2 percent relative humidity, and at a temperature of 20° ± 2 °C (68 °F ± 4 °F), or 27 °C ± 2 °C (81 °F ± 4 °F).

(b) Average values for temperature and humidity must fall within the limits in paragraph (a) of this section. Short-term fluctuations and measurement limitations may cause individual measurements to vary by up to ± 5 percent relative humidity without significant impairment of test reproducibility.

(c) For purposes of periodic design requalification only, fiberboard intermediate bulk containers or composite intermediate bulk containers with fiberboard outer packagings may be at ambient conditions.

§ 178.803 Testing and certification of intermediate bulk containers.

Tests required for the certification of each intermediate bulk container design type are specified in the following table. The letter X indicates that one intermediate bulk container (except where noted) of each design type must be subjected to the tests in the order presented:

Performance test	Intermediate Bulk Container (IBC) type					
	Metal IBCs	Rigid plastic IBCs	Composite IBCs	Fiber-board IBCs	Wooden IBCs	Flexible IBCs
Vibration	[6] X	[6] X	[6] X	[6] X	[6] X	[1,5] X
Bottom lift	[2] X	X	X	X	X	
Top lift	[2] X	[2] X	[2] X			[2,5] X
Stacking	[7] X	[7] X	[7] X	[7] X	[7] X	[5] X
Leakproofness	[3] X	[3] X	[3] X			
Hydrostatic	[4] X	[3] X	[3] X			
Drop	[4] X	[4] X	[4] X	[4] X	[4] X	[5] X
Topple						[5] X
Righting						[2,5] X
Tear						[5] X

[1] Flexible intermediate bulk containers must be capable of withstanding the vibration test.
[2] This test must be performed only if intermediate bulk containers are designed to be handled this way. For metal intermediate bulk containers, at least one of the bottom lift or top lift tests must be performed.
[3] The leakproofness and hydrostatic pressure tests are required only for intermediate bulk containers intended to contain liquids or intended to contain solids loaded or discharged under pressure.
[4] Another intermediate bulk container of the same design type may be used for the drop test set forth in § 178.810 of this subchapter.
[5] Another different flexible intermediate bulk container of the same design type may be used for each test.
[6] The vibration test may be performed in another order for intermediate bulk containers manufactured and tested under provisions of an exemption before October 1, 1994 and for non-DOT specification portable tanks tested before October 1, 1994, intended for export.
[7] This test must be performed only if the intermediate bulk container is designed to be stacked.

[Amdt. 178–108, 60 FR 40039, Aug. 4, 1995]

§ 178.810 Drop test.

(a) *General.* The drop test must be conducted for the qualification of all intermediate bulk container design types and performed periodically as specified in § 178.801(e) of this subpart.

(b) *Special preparation for the drop test.* (1) Metal, rigid plastic, and composite intermediate bulk containers intended to contain solids must be filled to not less than 95 percent of their capacity, or if intended to contain liquids, to not less than 98 percent of their capacity. Pressure relief devices must be removed and their apertures plugged or rendered inoperative.

(2) Fiberboard, wooden, and flexible intermediate bulk containers must be filled with a solid material to not less than 95 percent of their capacity.

(3) Rigid plastic intermediate bulk containers and composite intermediate bulk containers with plastic inner receptacles must be conditioned for testing by reducing the temperature of the packaging and its contents to –18 °C (0 °F) or lower. Test liquids must be kept in the liquid state. Anti-freeze should be used, if necessary.

(c) *Test method.* Samples of all intermediate bulk container design types must be dropped onto a rigid, non-resilient, smooth, flat and horizontal surface. The point of impact must be the most vulnerable part of the base of the intermediate bulk container being tested. Following the drop, the intermediate bulk container must be restored to the upright position for observation.

(d) *Drop height.* (1) For all intermediate bulk containers, drop heights are specified as follows:

(i) Packing Group I: 1.8 m (5.9 feet).

(ii) Packing Group II: 1.2 m (3.9 feet).

(iii) Packing Group III: 0.8 m (2.6 feet).

(2) Drop tests are to be performed with the solid or liquid to be transported or with a non-hazardous material having essentially the same physical characteristics.

(3) The specific gravity and viscosity of a substituted non-hazardous material used in the drop test for liquids must be similar to the hazardous material intended for transportation. Water also may be used for the liquid drop test under the following conditions:

(i) Where the substances to be carried have a specific gravity not exceeding 1.2, the drop heights must be those specified in paragraph (d)(1) of this section for each intermediate bulk container design type; and

(ii) Where the substances to be carried have a specific gravity exceeding 1.2, the drop heights must be as follows:

(A) Packing Group I: SG x 1.5 m (4.9 feet).

(B) Packing Group II: SG x 1.0 m (3.3 feet).

(C) Packing Group III: SG x 0.67 m (2.2 feet).

(e) *Criteria for passing the test.* For all intermediate bulk container design types there may be no loss of contents. A slight discharge from a closure upon impact is not considered to be a failure of the intermediate bulk container provided that no further leakage occurs. A slight discharge (e.g., from closures or stitch holes) upon impact is not considered a failure of the flexible intermediate bulk container provided that no further leakage occurs after the intermediate bulk container has been raised clear of the ground.

§ 178.811 Bottom lift test.

(a) *General.* The bottom lift test must be conducted for the qualification of all intermediate bulk container design types designed to be lifted from the base.

(b) *Special preparation for the bottom lift test.* The intermediate bulk container must be loaded to 1.25 times its maximum permissible gross mass, the load being evenly distributed.

(c) *Test method.* All intermediate bulk container design types must be raised and lowered twice by a lift truck with the forks centrally positioned and spaced at three quarters of the dimension of the side of entry (unless the points of entry are fixed). The forks must penetrate to three quarters of the direction of entry. The test must be repeated from each possible direction of entry.

(d) *Criteria for passing the test.* For all intermediate bulk container design types designed to be lifted from the base, there may be no permanent deformation which renders the intermediate bulk container unsafe for transportation and no loss of contents.

§ 178.812 Top lift test.

(a) *General.* The top lift test must be conducted for the qualification of all intermediate bulk container design types designed to be lifted from the top or, for flexible intermediate bulk containers, from the side.

(b) *Special preparation for the top lift test.* (1) Metal, rigid plastic, and composite intermediate bulk container design types must be loaded to twice the maximum permissible gross mass.

(2) Flexible intermediate bulk container design types must be filled to six times the maximum net mass, the load being evenly distributed.

(c) *Test method.* (1) A metal or flexible intermediate bulk container must be lifted in the manner for which it is designed until clear of the floor and maintained in that position for a period of five minutes. For flexible intermediate bulk container design types, other methods of top lift testing and preparation at least equally effective may be used (see § 178.801(i)).

(2) Rigid plastic and composite intermediate bulk container design types must be:

(i) Lifted by each pair of diagonally opposite lifting devices, so that the hoisting forces are applied vertically, for a period of five minutes; and

(ii) Lifted by each pair of diagonally opposite lifting devices, so that the hoisting forces are applied towards the center at 45° to the vertical, for a period of five minutes.

(d) *Criteria for passing the test.* For all intermediate bulk container design types designed to be lifted from the top, there may be no permanent deformation which renders the intermediate bulk container, including the base pallets when applicable, unsafe for transportation, and no loss of contents.

§ 178.813 Leakproofness test.

(a) *General.* The leakproofness test must be conducted for the qualification of all intermediate bulk container design types and on all production units intended to contain liquids or intended to contain solids that are loaded or discharged under pressure.

(b) *Special preparation for the leakproofness test.* Vented closures must either be replaced by similar non-vented closures or the vent must be sealed. For metal intermediate bulk container design types, the initial test must be carried out before the fitting of any thermal insulation equipment.

(c) *Test method and pressure applied.* The leakproofness test must be carried out for a suitable length of time using air at a gauge pressure of not less than 20 kPa (2.9 psig). Leakproofness of intermediate bulk container design types

must be determined by coating the seams and joints with a heavy oil, a soap solution and water, or other methods suitable for the purpose of detecting leaks. Other methods, if at least equally effective, may be used in accordance with appendix B of this part, or if approved by the Associate Administrator for Hazardous Materials Safety, as provided in § 178.801(i)).

(d) *Criterion for passing the test.* For all intermediate bulk container design types intended to contain liquids or intended to contain solids that are loaded or discharged under pressure, there may be no leakage of air from the intermediate bulk container.

§ 178.814 Hydrostatic pressure test.

(a) *General.* The hydrostatic pressure test must be conducted for the qualification of all metal, rigid plastic, and composite intermediate bulk container design types intended to contain liquids or intended to contain solids loaded or discharged under pressure.

(b) *Special preparation for the hydrostatic pressure test.* For metal intermediate bulk containers, the test must be carried out before the fitting of any thermal insulation equipment. For all intermediate bulk containers, pressure relief devices and vented closures must be removed and their apertures plugged or rendered inoperative.

(c) *Test method.* Hydrostatic gauge pressure must be measured at the top of the intermediate bulk container. The test must be carried out for a period of at least 10 minutes applying a hydrostatic gauge pressure not less than that indicated in paragraph (d) of this section. The intermediate bulk containers may not be mechanically restrained during the test.

(d) *Hydrostatic gauge pressure applied.* (1) For metal intermediate bulk container design types, 31A, 31B, 31N: 65 kPa gauge pressure (9.4 psig).

(2) For metal intermediate bulk container design types 21A, 21B, 21N, 31A, 31B, 31N: 200 kPa (29 psig). For metal intermediate bulk container design types 31A, 31B and 31N, the tests in paragraphs (d)(1) and (d)(2) of this section must be conducted consecutively.

(3) For metal intermediate bulk containers design types 21A, 21B, and 21N, for Packing Group I solids: 250 kPa (36 psig) gauge pressure.

(4) For rigid plastic intermediate bulk container design types 21H1 and 21H2 and composite intermediate bulk container design types 21HZ1 and 21HZ2: 75 kPa (11 psig).

(5) For rigid plastic intermediate bulk container design types 31H1 and 31H2 and composite intermediate bulk container design types 31HZ1 and 31HZ2: whichever is the greater of:

(i) The pressure determined by any one of the following methods:

(A) The gauge pressure (pressure in the intermediate bulk container above ambient atmospheric pressure) measured in the intermediate bulk container at 55 °C (131 °F) multiplied by a safety factor of 1.5. This pressure must be determined on the basis of the intermediate bulk container being filled and closed to no more than 98 percent capacity at 15 °C (60 °F);

(B) If absolute pressure (vapor pressure of the hazardous material plus atmospheric pressure) is used, 1.5 multiplied by the vapor pressure of the hazardous material at 55 °C (131 °F) minus 100 kPa (14.5 psi). If this method is chosen, the hydrostatic test pressure applied must be at least 100 kPa gauge pressure (14.5 psig); or

(C) If absolute pressure (vapor pressure of the hazardous material plus atmospheric pressure) is used, 1.75 multiplied by the vapor pressure of the hazardous material at 50 °C (122 °F) minus 100 kPa (14.5 psi). If this method is chosen, the hydrostatic test pressure applied must be at least 100 kPa gauge pressure (14.5 psig); or

(ii) Twice the greater of: (A) The static pressure of the hazardous material on the bottom of the intermediate bulk container filled to 98 percent capacity; or

(B) The static pressure of water on the bottom of the intermediate bulk container filled to 98 percent capacity.

(e) *Criteria for passing the test(s).* (1) For metal intermediate bulk containers, subjected to the 65 kPa (9.4 psig) test pressure specified in paragraph (d)(1) of this section, there may be no leakage or permanent deformation that would make the intermediate bulk container unsafe for transportation.

(2) For metal intermediate bulk containers intended to contain liquids, when subjected to the 200 kPa (29 psig) and the 250 kPa (36 psig) test pressures specified in paragraphs (d)(2) and (d)(3) of this section, respectively, there may be no leakage.

(3) For rigid plastic intermediate bulk container types 21H1, 21H2, 31H1, and 31H2, and composite intermediate bulk container types 21HZ1, 21HZ2, 31HZ1, and 31HZ2, there may be no leakage and no permanent deformation which renders the intermediate bulk container unsafe for transportation.

§ 178.815 Stacking test.

(a) *General.* The stacking test must be conducted for the qualification of all intermediate bulk container design types intended to be stacked.

(b) *Special preparation for the stacking test.* (1) All intermediate bulk containers except flexible intermediate bulk container design types must be loaded to their maximum permissible gross mass.

(2) The flexible intermediate bulk container must be filled to not less than 95 percent of its capacity and to its maximum net mass, with the load being evenly distributed.

(c) *Test method.* (1) All intermediate bulk containers must be placed on their base on level, hard ground and subjected to a uniformly distributed superimposed test load for a period of at least five minutes (see paragraph (d) of this section).

(2) Fiberboard, wooden, and composite intermediate bulk containers with outer packagings constructed of other than plastic materials must be subjected to the test for 24 hours.

(3) Rigid plastic intermediate bulk container types and composite intermediate bulk container types with plastic outer packagings (11HH1, 11HH2, 21HH1, 21HH2, 31HH1 and 31HH2) which bear the stacking load must be subjected to the test for 28 days at 40 °C (104 °F).

(4) For all intermediate bulk containers, the load must be applied by one of the following methods:

(i) One or more intermediate bulk containers of the same type loaded to their maximum permissible gross mass and stacked on the test intermediate bulk container; or

(ii) The calculated superimposed test load weight loaded on either a flat plate or a reproduction of the base of the intermediate bulk container, which is stacked on the test intermediate bulk container.

(d) *Calculation of superimposed test load.* For all intermediate bulk containers, the load to be placed on the intermediate bulk container must be 1.8 times the combined maximum permissible gross mass of the number of similar intermediate bulk containers that may be stacked on top of the intermediate bulk container during transportation.

(e) *Criteria for passing the test.* (1) For metal, rigid plastic, and composite intermediate bulk containers there may be no permanent deformation which renders the intermediate bulk container unsafe for transportation and no loss of contents.

(2) For fiberboard and wooden intermediate bulk containers there may be no loss of contents and no permanent deformation which renders the whole intermediate bulk container, including the base pallet, unsafe for transportation.

(3) For flexible intermediate bulk containers, there may be no deterioration which renders the intermediate bulk container unsafe for transportation and no loss of contents.

[Amdt. 178–103, 59 FR 38074, July 26, 1994, as amended by Amdt. 178–119, 62 FR 24743, May 6, 1997]

§ 178.816 Topple test.

(a) *General.* The topple test must be conducted for the qualification of all flexible intermediate bulk container design types.

(b) *Special preparation for the topple test.* The flexible intermediate bulk container must be filled to not less than 95 percent of its capacity and to its maximum net mass, with the load being evenly distributed.

(c) *Test method.* A flexible intermediate bulk container must be toppled onto any part of its top upon a rigid, non-resilient, smooth, flat, and horizontal surface.

(d) *Topple height.* For all flexible intermediate bulk containers, the topple height is specified as follows:

(1) Packing Group I: 1.8 m (5.9 feet).

(2) Packing Group II: 1.2 m (3.9 feet).

(3) Packing Group III: 0.8 m (2.6 feet).

(e) *Criteria for passing the test.* For all flexible intermediate bulk containers, there may be no loss of contents. A slight discharge (e.g., from closures or stitch holes) upon impact is not considered to be a failure, provided no further leakage occurs.

§ 178.817 Righting test.

(a) *General.* The righting test must be conducted for the qualification of all flexible intermediate bulk containers designed to be lifted from the top or side.

(b) *Special preparation for the righting test.* The flexible intermediate bulk container must be filled to not less than 95 percent of its capacity and to its maximum net mass, with the load being evenly distributed.

(c) *Test method.* The flexible intermediate bulk container, lying on its side, must be lifted at a speed of at least 0.1 m/second (0.33 ft/s) to an upright position, clear of the floor, by one lifting device, or by two lifting devices when four are provided.

(d) *Criterion for passing the test.* For all flexible intermediate bulk containers, there may be no damage to the intermediate bulk container or its lifting devices which renders the intermediate bulk container unsafe for transportation or handling.

§ 178.818 Tear test.

(a) *General.* The tear test must be conducted for the qualification of all flexible intermediate bulk container design types.

(b) *Special preparation for the tear test.* The flexible intermediate bulk container must be filled to not less than 95 percent of its capacity and to its maximum net mass, the load being evenly distributed.

(c) *Test method.* Once the intermediate bulk container is placed on the ground, a 100-mm (4-inch) knife score, completely penetrating the wall of a wide face, is made at a 45° angle to the principal axis of the intermediate bulk container, halfway between the bottom surface and the top level of the contents. The intermediate bulk container must then be subjected to a uniformly distributed superimposed load equivalent to twice the maximum net mass. The load must be applied for at least five minutes. An intermediate bulk container which is designed to be lifted from the top or the side must, after removal of the superimposed load, be lifted clear of the floor and maintained in that position for a period of five minutes.

(d) *Criterion for passing the test.* The intermediate bulk container passes the tear test if the cut does not propagate more than 25 percent of its original length.

§ 178.819 Vibration test.

(a) *General.* The vibration test must be conducted for the qualification of all rigid intermediate bulk container design types. Flexible intermediate bulk container design types must be capable of withstanding the vibration test.

(b) *Test method.* (1) A sample intermediate bulk container, selected at random, must be filled and closed as for shipment.

(2) The sample intermediate bulk container must be placed on a vibrating platform that has a vertical double-amplitude (peak-to-peak displacement) of one inch. The intermediate bulk container must be constrained horizontally to prevent it from falling off the platform, but must be left free to move vertically and bounce.

(3) The test must be performed for one hour at a frequency that causes the package to be raised from the vibrating platform to such a degree that a piece of material of approximately 1.6-mm (0.063-inch) thickness (such as steel strapping or paperboard) can be passed between the bottom of the intermediate bulk container and the platform. Other methods at least equally effective may be used (see § 178.801(i)).

(c) *Criteria for passing the test.* An intermediate bulk container passes the vibration test if there is no rupture or leakage.

[Amdt. 178–103, 59 FR 38074, July 26, 1994, as amended by Amdt. 178–108, 60 FR 40038, Aug. 4, 1995; Amdt. 178–110, 60 FR 49111, Sept. 21, 1995]

APPENDIX A TO PART 178—SPECIFICATIONS FOR STEEL

TABLE 1

[Open-hearth, basic oxygen, or electric steel of uniform quality. The following chemical composition limits are based on ladle analysis:]

Designation	Chemical composition, percent-ladle analysis		
	Grade 1[1]	Grade 2[1 2]	Grade 3[2 4 5]
Carbon	0.10/0.20	0.24 maximum	0.22 maximum.
Manganese	1.10/1.60	0.50/1.00	1.25 maximum.
Phosphorus, maximum	0.04	0.04	0.045.[6]
Sulfur, maximum	0.05	0.05	0.05.
Silicon	0.15/0.30	0.30 maximum	
Copper, maximum	0.40		
Columbium		0.01/0.04	
Heat treatment authorized	(3)	(3)	(3).
Maximum stress (p.s.i.)	35,000	35,000	35,000.

[1] Addition of other elements to obtain alloying effect is not authorized.
[2] Ferritic grain size 6 or finer according to ASTM E112–63.
[3] Any suitable heat treatment in excess of 1,100° F., except that liquid quenching is not permitted.
[4] Other alloying elements may be added and shall be reported.
[5] For compositions with a maximum carbon content of 0.15 percent of ladle analysis, the maximum limit for manganese on ladle analysis may be 1.40 percent.
[6] Rephosphorized Grade 3 steels containing no more than 0.15 percent phosphorus are permitted if carbon content does not exceed 0.15 percent and manganese does not exceed 1 percent.

CHECK ANALYSIS TOLERANCES

[A heat of steel made under any of the above grades, the ladle analysis of which is slightly out of the specified range is acceptable if the check analysis is within the following variations:]

Element	Limit or maximum specified (percent)	Tolerance (percent) over the maximum limit or under the minimum limit	
		Under minimum limit	Over maximum limit
Carbon	To 0.15 inclusive	0.02	0.03
	Over 0.15 to 0.40 inclusive	0.03	0.04
Manganese	To 0.60 inclusive	0.03	0.03
	Over 0.60 to 1.15 inclusive	0.04	0.04
	Over 1.15 to 2.50 inclusive	0.05	0.05
Phosphorus[7]	All ranges		0.01
Sulfur	All ranges		0.01
Silicon	To 0.30 inclusive	0.02	0.03
	Over 0.30 to 1.00 inclusive	0.05	0.05
Copper	To 1.00 inclusive	0.03	0.03
	Over 1.00 to 2.00 inclusive	0.05	0.05
Nickel	To 1.00 inclusive	0.03	0.03
	Over 1.00 to 2.00 inclusive	0.05	0.05
Chromium	To 0.90 inclusive	0.03	0.03
	Over 0.90 to 2.10 inclusive	0.05	0.05
Molybdenum	To 0.20 inclusive	0.01	0.01
	Over 0.20 to 0.40 inclusive	0.02	0.02
Zirconium	All ranges	0.01	0.05
Columbium	To 0.04 inclusive	0.005	0.01
Aluminum	Over 0.10 to 0.20 inclusive	0.04	0.04
	Over 0.20 to 0.30 inclusive	0.05	0.05

[7] Rephosphorized steels not subject to check analysis for phosphorus.

[Amdt. 178–3, 34 FR 12283, July 25, 1969; 34 FR 12593, Aug. 1, 1969, as amended by Amdt. 178–64, 45 FR 81573, Dec. 11, 1980; Amdt. 178–97, 55 FR 52728, Dec. 21, 1990]

APPENDIX B TO PART 178—ALTERNATIVE LEAKPROOFNESS TEST METHODS

In addition to the method prescribed in §178.604 of this subchapter, the following leakproofness test methods are authorized:

(1) *Helium test.* The packaging must be filled with at least 1 L inert helium gas, air tight closed, and placed in a testing chamber. The testing chamber must be evacuated down to a pressure of 5 kPa which equals an over-pressure inside the packaging of 95 kPa. The air in the testing chamber must be analyzed for traces of helium gas by means of a

mass spectrograph. The test must be conducted for a period of time sufficient to evacuate the chamber and to determine if there is leakage into or out of the packaging. If helium gas is detected, the leaking packaging must be automatically separated from nonleaking drums and the leaking area determined according to the method prescribed in §178.604(d) of this subchapter. A packaging passes the test if there is no leakage of helium.

(2) *Pressure differential test.* The packaging shall be restrained while either pressure or a vacuum is applied internally. The packaging must be pressurized to the pressure required by §178.604(e) of this subchapter for the appropriate packing group. The method of restraint must not affect the results of the test. The test must be conducted for a period of time sufficient to appropriately pressurize or evacuate the interior of the packaging and to determine if there is leakage into or out of the packaging. A packaging passes the pressure differential test if there is no change in measured internal pressure.

(3) *Solution over seams.* The packaging must be restrained while an internal air pressure is applied; the method of restraint may not affect the results of the test. The exterior surface of all seams and welds must be coated with a solution of soap suds or a water and oil mixture. The test must be conducted for a period of time sufficient to pressurize the interior of the packaging to the specified air pressure and to determine if there is leakage of air from the packaging. A packaging passes the test if there is no leakage of air from the packaging.

(4) *Solution over partial seams test.* For other than design qualification testing, the following test may be used for metal drums: The packaging must be restrained while an internal air pressure of 48 kPa (7.0 psig) is applied; the method of restraint may not affect the results of the test. The packaging must be coated with a soap solution over the entire side seam and a distance of not less than eight inches on each side of the side seam along the chime seam(s). The test must be conducted for a period of time sufficient to pressurize the interior of the packaging to the specified air pressure and to determine if there is leakage of air from the packaging. A packaging passes the test if there is no leakage of air from the packaging. Chime cuts must be made on the initial drum at the beginning of each production run and on the initial drum after any adjustment to the chime seamer. Chime cuts must be maintained on file in date order for not less than six months and be made available to a representative of the Department of Transportation on request.

[Amdt. 178–97, 55 FR 52728, Dec. 21, 1990, as amended at 56 FR 66287, Dec. 20, 1991; 57 FR 45466, Oct. 1, 1992]

APPENDIX C TO PART 178—NOMINAL AND MINIMUM THICKNESSES OF STEEL DRUMS AND JERRICANS

For each listed packaging capacity, the following table compares the ISO Standard 3574 nominal thickness with the corresponding ISO Standard 3574 minimum thickness.

Maximum capacity (L)	ISO nominal (mm)	Corresponding ISO minimum (mm)
20	0.7	0.63
30	0.8	0.73
40	0.8	0.73
60	1.0	0.92
120	1.0	0.92
220	1.0	0.92
450	1.9	1.77

[Amdt. 178–106, 59 FR 67522, Dec. 29, 1994]

PART 179—SPECIFICATIONS FOR TANK CARS

Subpart A—Introduction, Approvals and Reports

Sec.
179.1 General.
179.2 Definitions and abbreviations.
179.3 Procedure for securing approval.
179.4 Changes in specifications for tank cars.
179.5 Certificate of construction.
179.6 Repairs and alterations.
179.7 Quality assurance program.

Subpart B—General Design Requirements

179.10 Tank mounting.
179.11 Welding certification.
179.12 Interior heater systems.
179.13 Tank car capacity and gross weight limitation.
179.14 Coupler vertical restraint system.
179.15 Pressure relief devices.
179.16 Tank-head puncture-resistance systems.
179.18 Thermal protection systems.
179.20 Service equipment; protection systems.
179.22 Marking.

Subpart C—Specifications for Pressure Tank Car Tanks (Classes DOT–105, 109, 112, and 114)

179.100 General specification applicable to pressure tank car tanks.
179.100–1 Tanks built under these specifications shall comply with the requirements of §§179.100, 179.101 and when applicable, §§179.102, 179.103, and 179.104.
179.100–3 Type.
179.100–4 Insulation.

179.100–6 Thickness of plates.
179.100–7 Materials.
179.100–8 Tank heads.
179.100–9 Welding.
179.100–10 Postweld heat treatment.
179.100–12 Manway nozzle, cover and protective housing.
179.100–13 Venting, loading and unloading valves, measuring and sampling devices.
179.100–14 Bottom outlets.
179.100–16 Attachments.
179.100–17 Closures for openings.
179.100–18 Tests of tanks.
179.100–19 Tests of safety relief valves.
179.100–20 Stamping.
179.100–21 Stenciling.
179.101 Individual specification requirements applicable to pressure tank car tanks.
179.101–1 Individual specification requirements.
179.102 Special commodity requirements for pressure tank car tanks.
179.102–1 Carbon dioxide, refrigerated liquid.
179.102–2 Chlorine.
179.102–4 Vinyl fluoride, inhibited.
179.102–17 Hydrogen chloride, refrigerated liquid.
179.103 Special requirements for class 114A * * * tank car tanks.
179.103–1 Type.
179.103–2 Manway cover.
179.103–3 Venting, loading and unloading valves, measuring and sampling devices.
179.103–4 Safety relief devices and pressure regulators.
179.103–5 Bottom outlets.

Subpart D—Specifications for Nonpressure Tank Car Tanks (Classes DOT–103, 104, 111AF, 111AW, and 115AW)

179.200 General specifications applicable to non-pressure tank car tanks (Classes DOT–103, 104, and 111).
179.200–1 Tank built under these specifications must meet the requirements of §§179.200, 179.201 and when applicable §179.202.
179.200–3 Type.
179.200–4 Insulation.
179.200–6 Thickness of plates.
179.200–7 Materials.
179.200–8 Tank heads.
179.200–9 Compartment tanks.
179.200–10 Welding.
179.200–11 Postweld heat treatment.
179.200–13 Manway ring or flange, safety relief device flange, bottom outlet nozzle flange, bottom washout nozzle flange and other attachments and openings.
179.200–14 Expansion capacity.
179.200–15 Closures for manways.
179.200–16 Gauging devices, top loading and unloading devices, venting and air inlet devices.
179.200–17 Bottom outlets.
179.200–19 Reinforcements, when used, and appurtenances not otherwise specified.
179.200–21 Closures for openings.
179.200–22 Test of tanks.
179.200–23 Tests of safety relief valves.
179.200–24 Stamping.
179.201 Individual specification requirements applicable to non-pressure tank car tanks.
179.201–1 Individual specification requirements.
179.201–2 Minimum plate thickness.
179.201–3 Lined tanks.
179.201–4 Material.
179.201–5 Postweld heat treatment and corrosion resistance.
179.201–6 Manways and manway closures.
179.201–8 Sampling device and thermometer well.
179.201–9 Gauging device.
179.201–10 Water capacity marking.
179.201–11 Insulation.
179.202—179.202–22 [Reserved]
179.220 General specifications applicable to nonpressure tank car tanks consisting of an inner container supported within an outer shell (class DOT–115).
179.220–1 Tanks built under these specifications must meet the requirements of §179.220, §179.221, and §179.222.
179.220–3 Type.
179.220–4 Insulation.
179.220–6 Thickness of plates.
179.220–7 Materials.
179.220–8 Tank heads.
179.220–9 Compartment tanks.
179.220–10 Welding.
179.220–11 Postweld heat treatment.
179.220–13 Inner container manway nozzle and cover.
179.220–14 Openings in the tanks.
179.220–15 Support system for inner container.
179.220–16 Expansion capacity.
179.220–17 Gauging devices, top loading and unloading devices, venting and air inlet devices.
179.220–18 Bottom outlets.
179.220–20 Reinforcements, when used, and appurtenances not otherwise specified.
179.220–22 Closure for openings.
179.220–23 Test of tanks.
179.220–24 Tests of safety relief valves.
179.220–25 Stamping.
179.220–26 Stenciling.
179.221 Individual specification requirements applicable to tank car tanks consisting of an inner container supported within an outer shell.
179.221–1 Individual specification requirements.

Subpart E—Specifications for Multi-Unit Tank Car Tanks (Classes DOT–106A and 110AW)

179.300 General specifications applicable to multi-unit tank car tanks designed to be removed from car structure for filling and emptying (Classes DOT–106A and 110AW).
179.300–1 Tanks built under these specifications shall meet the requirements of §179.300, §179.301 and when applicable, §179.302.
179.300–3 Type and general requirements.
179.300–4 Insulation.
179.300–6 Thickness of plates.
179.300–7 Materials.
179.300–8 Tank heads.
179.300–9 Welding.
179.300–10 Postweld heat treatment.
179.300–12 Protection of fittings.
179.300–13 Venting, loading and unloading valves.
179.300–14 Attachments not otherwise specified.
179.300–15 Safety relief devices.
179.300–16 Tests of tanks.
179.300–17 Tests of safety relief devices.
179.300–18 Stamping.
179.300–19 Inspection.
179.300–20 Reports.
179.301 Individual specification requirements for multi-unit tank car tanks.
179.302 [Reserved]

Subpart F—Specification for Cryogenic Liquid Tank Car Tanks and Seamless Steel Tanks (Classes DOT–113 and 107A)

179.400 General specification applicable to cryogenic liquid tank car tanks.
179.400–1 General.
179.400–3 Type.
179.400–4 Insulation system and performance standard.
179.400–5 Materials.
179.400–6 Bursting and buckling pressure.
179.400–7 Tank heads.
179.400–8 Thickness of plates.
179.400–9 Stiffening rings.
179.400–10 Sump or siphon bowl.
179.400–11 Welding.
179.400–12 Postweld heat treatment.
179.400–13 Support system for inner tank.
179.400–14 Cleaning of inner tank.
179.400–15 Radioscopy.
179.400–16 Access to inner tank.
179.400–17 Inner tank piping.
179.400–18 Test of inner tank.
179.400–19 Valves and gages.
179.400–20 Pressure relief devices.
179.400–21 Test of pressure relief valves.
179.400–22 Protective housings.
179.400–23 Operating instructions.
179.400–24 Stamping.
179.400–25 Stenciling.
179.401 Individual specification requirements applicable to inner tanks for cryogenic liquid tank car tanks.
179.401–1 Individual specification requirements.
179.500 Specification DOT–107A * * * *, seamless steel tank car tanks.
179.500–1 Tanks built under these specifications shall meet the requirements of §179.500.
179.500–3 Type and general requirements.
179.500–4 Thickness of wall.
179.500–5 Material.
179.500–6 Heat treatment.
179.500–7 Physical tests.
179.500–8 Openings in tanks.
179.500–10 Protective housing.
179.500–11 Loading and unloading valves.
179.500–12 Safety relief devices.
179.500–13 Fixtures.
179.500–14 Test of tanks.
179.500–15 Handling of tanks failing in tests.
179.500–16 Tests of safety relief devices.
179.500–17 Marking.
179.500–18 Inspection and reports.
APPENDIX A TO PART 179—PROCEDURES FOR TANK-HEAD PUNCTURE-RESISTANCE TEST
APPENDIX B TO PART 179—PROCEDURES FOR SIMULATED POOL AND TORCH-FIRE TESTING

AUTHORITY: 49 U.S.C. 5101–5127; 49 CFR part 1.53.

SOURCE: 29 FR 18995, Dec. 29, 1964, unless otherwise noted. Redesignated at 32 FR 5606, Apr. 5, 1967.

EDITORIAL NOTE: The technical amendment appearing at 35 FR 13835, Sept. 1, 1970, deleted the separating hyphens from references to specification identifications of tank cars.

Subpart A—Introduction, Approvals and Reports

§179.1 General.

(a) This part prescribes the specifications for tanks that are to be mounted on or form part of a tank car and which are used for the transportation of hazardous materials in commerce.

(b) Except as provided in paragraph (c) of this section, tanks to which this part is applicable, must be built to the specifications prescribed in this part.

(c) Tanks built to specifications predating those in this part may continue in use as provided in §180.507 of this subchapter.

(d) Any person who performs a function prescribed in this part, shall perform that function in accordance with this part.

(e) When this part requires a tank to be marked with a DOT specification (for example, DOT–105A100W), compliance with that requirement is the responsibility of the tank builder. Marking the tank with the DOT specification shall be understood to certify compliance by the builder that the functions performed by the builder, as prescribed in this part, have been performed in compliance with this part.

(f) The tank builder should inform each person to whom that tank is transferred of any specification requirements which have not been met at time of transfer.

[Amdt. 179–17, 41 FR 38183, Sept. 9, 1976, as amended by Amdt. 179–50, 60 FR 49076, Sept. 21, 1995]

§ 179.2 Definitions and abbreviations.

(a) The following apply in part 179:

(1) *AAR* means Association of American Railroads.

(2) *Approved* means approval by the AAR Committee on Tank Cars.

(3) *ASTM* means American Society for Testing and Materials.

(4) *DOT* and *Department* means Department of Transportation.

(5) Definitions in part 173 of this chapter also apply.

(6) *F* means degrees Fahrenheit.

(7) *NGT* means National Gas Taper Threads.

(8) *NPT* means American Standard Tape Pipe Thread.

(9) *Psi* means pounds per square inch gauge.

(10) *Tank car facility* means an entity that manufactures, repairs, inspects, tests, qualifies, or maintains a tank car to ensure that the tank car conforms to this part and subpart F of part 180 of this subchapter, that alters the certificate of construction of the tank car, that ensures the continuing qualification of a tank car by performing a function prescribed in parts 179 or 180 of this subchapter, or that makes any representation indicating compliance with one or more of the requirements of parts 179 or 180 of this subchapter.

(11) *Tanks* means tank car tanks.

(b) [Reserved]

[29 FR 18995, Dec. 20, 1964. Redesignated at 32 FR 5606, Apr. 5, 1967, and amended by Amdt. 179–10, 36 FR 21344, Nov. 6, 1971; Amdt. 179–50, 60 FR 49076, Sept. 21, 1995; Amdt. 179–50, 61 FR 33255, June 26, 1996]

§ 179.3 Procedure for securing approval.

(a) Application for approval of designs, materials and construction, conversion or alteration of tank car tanks under these specifications, complete with detailed prints, shall be submitted in prescribed form to the Secretary, Mechanical Division, AAR, for consideration by its Committee on Tank Cars and other appropriate committees. Approvals or rejections of applications, based on appropriate committee action, shall be issued by said Secretary.

(b) When, in the opinion of the Committee, such tanks or equipment therefor are in compliance with effective regulations and specifications of the Department, the application will be approved.

(c) When, in the opinion of the Committee, such tanks or equipment therefor are not in compliance with effective regulations and specifications of the Department, the Committee may recommend service trials to determine the merits of a change in specifications. Such service trials may be authorized by the Department under the terms of exemptions.

[29 FR 18995, Dec. 29, 1964. Redesignated at 32 FR 5606, Apr. 5, 1967 and amended by Amdt. 179–41, 52 FR 36672, Sept. 30, 1987]

§ 179.4 Changes in specifications for tank cars.

(a) Proposed changes in or additions to specifications for tanks shall be submitted to the Secretary, Mechanical Division, AAR, for consideration by its Committee on Tank Cars. An application for construction of tanks to any new specification may be submitted with proposed specification. Construction should not be started until the specification has been approved or an exemption has been issued. When proposing a new specification, the applicant shall furnish information to justify a new specification. This data

should include the properties of the lading and the method of loading and unloading.

(b) The Subcommittee on Specifications of the Committee on Tank Cars shall review the proposed specification at its earliest convenience and report its recommendations to the Committee on Tank Cars for prompt consideration. The Committee on Tank Cars shall report its recommendations through said Secretary to the Department; such reports may be submitted to the Bureau of Explosives for its recommendation before action by the Department. Expert opinion thus obtained will be given due consideration by the Department in determining appropriate action.

[29 FR 18995, Dec. 29, 1964. Redesignated at 32 FR 5606, Apr. 5, 1967 and amended by Amdt. 179–41, 52 FR 36672, Sept. 30, 1987]

§179.5 Certificate of construction.

(a) Except as provided in paragraph (b) of this section, before a tank car is placed in service, the party assembling the completed car shall furnish a Certificate of Construction, Form AAR 4–2 to the owner, the Bureau of Explosives (as required by §179.5(d)), and the Secretary, Mechanical Division, AAR, certifying that the tank, equipment, and car completed comply with all the requirements of the specification.

(b) Before a tank of Class DOT–106A, 107A, or 110A is placed in service, the builder must furnish a Certificate of Construction, Form AAR 4–2 to the owner, the Bureau of Explosives (as required by paragraph (d) of this section), and the Secretary, Mechanical Division, AAR, in addition to a Certificate of Inspector's Report as required in §179.300–20 and §179.500–18 in prescribed form certifying that the tank and appurtenances comply with all the requirements of the specifications.

(c) If the owner elects to furnish the appurtenances such as valves and safety devices, the owner shall furnish to the Bureau of Explosives, and to the Secretary, Mechanical Division, AAR, a report in prescribed form, certifying that the appurtenances comply with all the requirements of the specifications.

(d) When cars or tanks which are covered on one application and are identical in all details are built in series, one certificate shall suffice for each series when submitted to the Secretary. One copy of the Certificate of Construction must be furnished to the Bureau of Explosives for each car number of consecutively numbered group or groups covered by the original application.

[Amdt. 179–10, 36 FR 21344, Nov. 6, 1971]

§179.6 Repairs and alterations.

For procedure to be followed in making repairs or alterations, see appendix R of the AAR Specifications for Tank Cars.

[Amdt. 179–10, 36 FR 21344, Nov. 6, 1971]

§179.7 Quality assurance program.

(a) At a minimum, each tank car facility shall have a quality assurance program, approved by AAR, that—

(1) Ensures the finished product conforms to the requirements of the applicable specification and regulations of this subchapter;

(2) Has the means to detect any nonconformity in the manufacturing, repair, inspection, testing, and qualification or maintenance program of the tank car; and

(3) Prevents non-conformities from recurring.

(b) At a minimum, the quality assurance program must have the following elements

(1) Statement of authority and responsibility for those persons in charge of the quality assurance program.

(2) An organizational chart showing the interrelationship between managers, engineers, purchasing, construction, inspection, testing, and quality control personnel.

(3) Procedures to ensure that the latest applicable drawings, design calculations, specifications, and instructions are used in manufacture, inspection, testing, and repair.

(4) Procedures to ensure that the fabrication and construction materials received are properly identified and documented.

(5) A description of the manufacturing, repair, inspection, testing, and qualification or maintenance program, including the acceptance criteria, so

that an inspector can identify the characteristics of the tank car and the elements to inspect, examine, and test at each point.

(6) Monitoring and control of processes and product characteristics during production.

(7) Procedures for correction of nonconformities.

(8) Provisions indicating that the requirements of the AAR Specifications for Tank Cars, Specification M–1002, apply.

(9) Qualification requirements of personnel performing non-destructive inspections and tests.

(10) Procedures for evaluating the inspection and test technique employed, including the accessibility of the area and the sensitivity and reliability of the inspection and test technique and minimum detectable crack length.

(11) Procedures for the periodic calibration and measurement of inspection and test equipment.

(12) A system for the maintenance of records, inspections, tests, and the interpretation of inspection and test results.

(c) Each tank car facility shall ensure that only personnel qualified for each non-destructive inspection and test perform that particular operation.

(d) Each tank car facility shall provide written procedures to its employees to ensure that the work on the tank car conforms to the specification, AAR approval, and owner's acceptance criteria.

(e) Each tank car facility shall train its employees in accordance with Subpart H of part 172 of this subchapter on the program and procedures specified in paragraph (b) of this section to ensure quality.

(f) *Date of conformance.* After July 1, 1998, no tank car facility may manufacture, repair, inspect, test, qualify or maintain tank cars subject to requirements of this subchapter, unless it is operating in conformance with a quality assurance program and written procedures required by paragraphs (a) and (b) of this section.

[Amdt. 179–50, 60 FR 49076, Sept. 21, 1995, as amended by Amdt. 179–50, 61 FR 33255, June 26, 1996]

Subpart B—General Design Requirements

§ 179.10 Tank mounting.

(a) The manner in which tanks are attached to the car structure shall be approved. The use of rivets to secure anchors to tanks prohibited.

(b) [Reserved]

§ 179.11 Welding certification.

(a) Welding procedures, welders and fabricators shall be approved.

(b) [Reserved]

§ 179.12 Interior heater systems.

(a) Interior heater systems shall be of approved design and materials. If a tank is divided into compartments, a separate system shall be provided for each compartment.

(b) Each interior heater system shall be hydrostatically tested at not less than 13.79 bar (200 psi) and shall hold the pressure for 10 minutes without leakage or evidence of distress.

[Amdt. 179–52, 61 FR 28678, June 5, 1996]

§ 179.13 Tank car capacity and gross weight limitation.

Tank cars built after November 30, 1970, must not exceed 34,500 gallons capacity or 263,000 pounds gross weight on rail. Existing tank cars may not be converted to exceed 34,500 gallons capacity or 263,000 pounds gross weight on rail.

[Amdt. 179–4, 35 FR 14217, Sept. 9, 1970]

§ 179.14 Coupler vertical restraint system.

(a) *Performance standard.* Each tank car shall be equipped with couplers capable of sustaining, without disengagement or material failure, vertical loads of at least 200,000 pounds (90,718.5 kg) applied in upward and downward directions in combination with buff loads of 2,000 pounds (907.2 kg), when coupled to cars which may or may not be equipped with couplers having this vertical restraint capability.

(b) *Test verification.* Except as provided in paragraph (d) of this section, compliance with the requirements of paragraph (a) of this section shall be achieved by verification testing of the

coupler vertical restraint system in accordance with paragraph (c) of this section.

(c) *Coupler vertical restraint tests.* A coupler vertical restraint system shall be tested under the following conditions:

(1) The test coupler shall be tested with a mating coupler (or simulated coupler) having only frictional vertical force resistance at the mating interface; or a mating coupler (or simulated coupler) having the capabilities described in paragraph (a) of this section;

(2) The testing apparatus shall simulate the vertical coupler performance at the mating interface and may not interfere with coupler failure or otherwise inhibit failure due to force applications and reactions; and

(3) The test shall be conducted as follows:

(i) A minimum of 200,000 pounds (90,718.5 kg) vertical downward load shall be applied continuously for at least 5 minutes to the test coupler head simultaneously with the application of a nominal 2,000 pounds (907.2 kg) buff load;

(ii) The procedures prescribed in paragraph (c)(3)(i) of this section, shall be repeated with a minimum vertical upward load of 200,000 pounds (90,718.5 kg); and

(iii) A minimum of three consecutive successful tests shall be performed for each load combination prescribed in paragraphs (c)(3) (i) and (ii) of this section. A test is successful when a vertical disengagement or material failure does not occur during the application of any of the loads prescribed in this paragraph.

(d) *Authorized couplers.* As an alternative to the test verifications in paragraph (c) of this section, the following couplers are authorized:

(1) E double shelf couplers designated by the Association of American Railroads' Catalog Nos., SE60CHT, SE60CC, SE60CHTE, SE60CE, SE60DC, SE60DE, SE67CC, SE67CE, SE67BHT, SE67BC, SE67BHTE, SE67BE, SE68BHT, SE68BC, SE68BHTE, SE68BE, SE69AHTE, and SE69AE.

(2) F double shelf couplers designated by the Association of American Railroads' Catalog Nos., SF70CHT, SF70CC, SF70CHTE, SF70CE, SF73AC, SF73AE, SF73AHT, SF73AHTE, SF79CHT, SF79CC, SF79CHTE, and SF79CE.

[Amdt. 179–42, 54 FR 38797, Sept. 20, 1989]

§179.15 Pressure relief devices.

Except for DOT Class 106, 107, 110, and 113 tank cars, tanks must have a pressure relief device, made of material compatible with the lading, that conforms to the following requirements:

(a) *Performance standard.* Each tank must have a pressure relief device, made of material compatible with the lading having sufficient flow capacity to prevent pressure build-up in the tank to no more than the flow rating pressure of the pressure relief device in fire conditions as defined in Appendix A of the Association of American Railroads Specifications for Tank Cars.

(b) *Settings for reclosing pressure relief devices.* (1) Except as provided in paragraph (b)(2) of this section, a reclosing pressure relief valve must have a minimum start-to-discharge pressure equal to the sum of the static head and gas padding pressure and the lading vapor pressure at the following reference temperatures:

(i) 46 °C (115 °F) for noninsulated tanks;

(ii) 43 °C (110 °F) for tanks having a thermal protection system incorporating a metal jacket that provides an overall thermal conductance at 15.5 °C (60 °F) of no more than 10.22 kilojoules per hour per square meter per degree Celsius (0.5 Btu per hour/per square foot/per degree F) temperature differential; and

(iii) 41 °C (105 °F) for insulated tanks.

(2)(i) The start-to-discharge pressure of a pressure relief device may not be lower than 5.17 Bar (75 psig) or exceed 33 percent of the minimum tank burst pressure.

(ii) Tanks built prior to October 1, 1997 having a minimum tank burst pressure of 34.47 Bar (500 psig) or less may be equipped with a reclosing pressure relief valve having a start-to-discharge pressure of not less than 14.5 percent of the minimum tank burst pressure but no more than 33 percent of the minimum tank burst pressure.

(3) The vapor tight pressure of a reclosing pressure relief valve must be at least 80 percent of the start-to-discharge pressure.

(4) The flow rating pressure must be 110 percent of the start-to-discharge pressure for tanks having a minimum tank burst pressure greater than 34.47 Bar (500 psig) and from 110 percent to 130 percent for tanks having a minimum tank burst pressure less than or equal to 34.47 Bar (500 psig).

(5) The tolerance for a reclosing pressure relief valve is ±3 psi for valves with a start-to-discharge pressure of 6.89 Bar (100 psig) or less and ±3 percent for valves with a start-to-discharge pressure greater than 6.89 Bar (100 psig).

(c) *Flow capacity of pressure relief devices.* The total flow capacity of each reclosing and nonreclosing pressure relief device must conform to Appendix A of the Association of American Railroads Specifications for Tank Cars.

(d) *Flow capacity tests.* The manufacturer of any reclosing or nonreclosing pressure relief device must design and test the device in accordance with Appendix A of the Association of American Railroads Specifications for Tank Cars.

(e) *Combination pressure relief systems.* A nonreclosing pressure relief device may be used in series with a reclosing pressure relief valve. The pressure relief valve must be located outboard of the nonreclosing pressure relief device.

(1) When a breaking pin device is used in combination with a reclosing pressure relief valve, the breaking pin must be designed to fail at the start-to-discharge pressure specified in paragraph (b) of this section, and the reclosing pressure relief valve must be designed to discharge at not greater than 95 percent of the start-to-discharge pressure.

(2) When a rupture disc is used in combination with a reclosing pressure relief valve, the rupture disc must be designed to burst at the start-to-discharge pressure specified in paragraph (b) of this section, and the reclosing pressure relief valve must be designed to discharge at not greater than 95 percent of the start-to-discharge pressure. A device must be installed to detect any accumulation of pressure between the rupture disc and the reclosing pressure relief valve. The detection device must be a needle valve, trycock, or tell-tale indicator. The detection device must be closed during transportation.

(3) The vapor tight pressure and the start-to-discharge tolerance is based on the discharge setting of the reclosing pressure relief device.

(f) *Nonreclosing pressure relief device.* In addition to paragraphs (a), (b)(4), (c), and (d) of this section, a nonreclosing pressure relief device must conform to the following requirements:

(1) Until October 1, 1998, a nonreclosing pressure relief device must incorporate a rupture disc designed to burst at a pressure equal to 100% of the tank test pressure, or 33% of the tank burst pressure. After that date, a nonreclosing pressure relief device must incorporate a rupture disc designed to burst at a pressure equal to the greater of 100% of the tank pressure, or 33% of the tank burst pressure.

(2) The approach channel and the discharge channel may not reduce the required minimum flow capacity of the pressure relief device.

(3) The nonreclosing pressure relief device must be designed to prevent interchange with other fittings installed on the tank car, must have a structure that encloses and clamps the rupture disc in position (preventing any distortion or damage to the rupture disc when properly applied), and must have a cover, with suitable means of preventing misplacement, designed to direct any discharge of the lading downward.

(4) The nonreclosing pressure relief device must be closed with a rupture disc that is compatible with the lading and manufactured in accordance with Appendix A of the AAR Specifications for Tank Cars. The tolerance for a rupture disc is +0 to −15 percent of the burst pressure marked on the disc.

(g) *Location of relief devices.* Each pressure relief device must communicate with the vapor space above the lading as near as practicable on the longitudinal center line and center of the tank.

(h) *Marking of pressure relief devices.* Each pressure relief device and rupture disc must be permanently marked in accordance with the Appendix A of the

Association of American Railroads Specifications for Tank Cars.

[Amdt. 179–52, 61 FR 28678, June 5, 1996, as amended by Amdt. 179–52, 61 FR 50255, Sept. 25, 1996; 62 FR 51561, Oct. 1, 1997]

§179.16 Tank-head puncture-resistance systems.

(a) *Performance standard.* When the regulations in this subchapter require a tank-head puncture-resistance system, the system shall be capable of sustaining, without any loss of lading, coupler-to-tank-head impacts at relative car speeds of 29 km/hour (18 mph) when:

(1) The weight of the impact car is at least 119,295 kg (263,000 pounds);

(2) The impacted tank car is coupled to one or more backup cars that have a total weight of at least 217,724 kg (480,000 pounds) and the hand brake is applied on the last ''backup'' car; and

(3) The impacted tank car is pressurized to at least 6.9 Bar (100 psi).

(b) *Verification by testing.* Compliance with the requirements of paragraph (a) of this section shall be verified by full-scale testing according to Appendix A of this part.

(c) *Alternative compliance by other than testing.* As an alternative to requirements prescribed in paragraph (b) of this section, compliance with the requirements of paragraph (a) of this section may be met by installing full-head protection (shields) or full tank-head jackets on each end of the tank car conforming to the following:

(1) The full-head protection (shields) or full tank-head jackets must be at least 1.27 cm (0.5 inch) thick, shaped to the contour of the tank head and made from steel having a tensile strength greater than 379.21 N/mm^2 (55,000 psi).

(2) The design and test requirements of the full-head protection (shields) or full tank-head jackets must meet the impact test requirements of Section 5.3 of the AAR Specifications for Tank Cars.

(3) The workmanship must meet the requirements of Section C, Part II, Chapter 5 of the AAR Specifications for Design, Fabrication, and Construction of Freight Cars.

[Amdt. 179–50, 60 FR 49077, Sept. 21, 1995, as amended by Amdt. 179–50, 61 FR 33255, June 26, 1996]

§179.18 Thermal protection systems.

(a) *Performance standard.* When the regulations in this subchapter require thermal protection on a tank car, the tank car must have sufficient thermal resistance so that there will be no release of any lading within the tank car, except release through the pressure release device, when subjected to:

(1) A pool fire for 100 minutes; and

(2) A torch fire for 30 minutes.

(b) *Thermal analysis.* (1) Compliance with the requirements of paragraph (a) of this section shall be verified by analyzing the fire effects on the entire surface of the tank car. The analysis must consider the fire effects on and heat flux through tank discontinuities, protective housings, underframes, metal jackets, insulation, and thermal protection. A complete record of each analysis shall be made, retained, and upon request, made available for inspection and copying by an authorized representative of the Department. The procedures outlined in ''Temperatures, Pressures, and Liquid Levels of Tank Cars Engulfed in Fires,'' DOT/FRA/OR&D–84/08.11, (1984), Federal Railroad Administration, Washington, DC (available from the National Technical Information Service, Springfield, VA) shall be deemed acceptable for analyzing the fire effects on the entire surface of the tank car.

(2) When the analysis shows the thermal resistance of the tank car does not conform to paragraph (a) of this section, the thermal resistance of the tank car must be increased by using a system listed by the Department under paragraph (c) of this section or by testing a new or untried system and verifying it according to appendix B of this part.

(c) *Systems that no longer require test verification.* The Department maintains a list of thermal protection systems that comply with the requirements of appendix B of this part and that no

longer require test verification. Information necessary to equip tank cars with one of these systems is available in the Dockets Unit, Research and Special Programs Administration, 400 Seventh Street, SW., Washington, DC 20590–0001.

[Amdt. 179–50, 60 FR 49077, Sept. 21, 1995, as amended by Amdt. 179–50, 61 FR 33256, June 26, 1996]

§ 179.20 Service equipment; protection systems.

If an applicable tank car specification authorizes location of filling or discharge connections in the bottom shell, the connections must be designed, constructed, and protected according to paragraphs E9.00 and E10.00 of the AAR Specifications for Tank Cars, M–1002.

[Amdt. 179–50, 60 FR 49077, Sept. 21, 1995]

§ 179.22 Marking.

In addition to any other marking requirement in this subchapter, the following marking requirements apply:

(a) Each tank car must be marked according to the requirements in Appendix C of the AAR Specifications for Tank Cars.

(b) Each tank car that requires a tank-head puncture-resistance system must have the letter ''S'' substituted for the letter ''A'' in the specification marking.

(c) Each tank car that requires a tank-head puncture-resistance system, a thermal protection system, and a metal jacket must have the letter ''J'' substituted for the letter ''A'' or ''S'' in the specification marking.

(d) Each tank car that requires a tank-head puncture-resistance system, a thermal protection system, and no metal jacket must have the letter ''T'' substituted for the letter ''A'' or ''S'' in the specification marking.

[Amdt. 179–50, 60 FR 49077, Sept. 21, 1995, as amended by Amdt. 179–50, 61 FR 33256, June 26, 1996]

Subpart C—Specifications for Pressure Tank Car Tanks (Classes DOT–105, 109, 112, and 114)

§ 179.100 General specification applicable to pressure tank car tanks.

§ 179.100–1 Tanks built under these specifications shall comply with the requirements of §§ 179.100, 179.101 and when applicable, §§ 179.102, 179.103, and 179.104.

§ 179.100–3 Type.

(a) Tanks built under this specification shall be fusion-welded with heads designed convex outward. Except as provided in § 179.103 or § 179.104 they shall be circular in cross section, shall be provided with a manway nozzle on top of the tank of sufficient size to permit access to the interior, a manway cover to provide for the mounting of all valves, measuring and sampling devices, and a protective housing. Other openings in the tank are prohibited, except as provided in part 173 of this chapter, §§ 179.100–14, 179.101–1 (a) Table Note 10, 179.102 or § 179.103.

(b) [Reserved]

[29 FR 18995, Dec. 29, 1964. Redesignated at 32 FR 5606, Apr. 5, 1967, and amended by Amdt. 179–10, 36 FR 21344, Nov. 6, 1971]

§ 179.100–4 Insulation.

(a) If insulation is applied, the tank shell and manway nozzle must be insulated with an approved material. The entire insulation must be covered with a metal jacket of a thickness not less than 11 gauge (0.1196 inch) nominal (Manufacturers' Standard Gauge) and flashed around all openings so as to be weather-tight. The exterior surface of a carbon steel tank, and the inside surface of a carbon steel jacket must be given a protective coating.

(b) If insulation is a specification requirement, it shall be of sufficient thickness so that the thermal conductance at 60° F is not more than 0.075 Btu per hour, per square foot, per degree F temperature differential. If exterior heaters are attached to tank, the

thickness of the insulation over each heater element may be reduced to one-half that required for the shell.

[29 FR 18995, Dec. 29, 1964. Redesignated at 32 FR 5606, Apr. 5, 1967, and amended by Amdt. 179–10, 36 FR 21344, Nov. 6, 1971; Amdt. 179–50, 60 FR 49077, Sept. 21, 1995]

§179.100–6 Thickness of plates.

(a) The wall thickness after forming of the tank shell and heads must not be less than that specified in §179.101, nor that calculated by the following formula:

$$t=Pd/2SE$$

where:

d=Inside diameter in inches;
E=1.0 welded joint efficiency; except for heads with seams=0.9;
P=Minimum required bursting pressure in p.s.i.;
S=Minimum tensile strength of plate material in p.s.i., as prescribed in §179.100–7;
t=Minimum thickness of plate in inches after forming.

(b) If plates are clad with material having tensile strength properties at least equal to the base plate, the cladding may be considered a part of the base plate when determining thickness. If cladding material does not have tensile strength at least equal to the base plate, the base plate alone shall meet the thickness requirement.

(c) When aluminum plate is used, the minimum width of bottom sheet of tank shall be 60 inches, measured on the arc, but in all cases the width shall be sufficient to bring the entire width of the longitudinal welded joint, including welds, above the bolster.

[29 FR 18995, Dec. 29, 1964. Redesignated at 32 FR 5606, Apr. 5, 1967, and amended by Amdt. 179–10, 36 FR 21344, Nov. 6, 1971]

§179.100–7 Materials.

(a) *Steel plate:* Steel plate materials used to fabricate tank shell and manway nozzle must comply with one of the following specifications with the indicated minimum tensile strength and elongation in the welded condition. The maximum allowable carbon content must be 0.31 percent when the individual specification allows carbon greater than this amount. The plates may be clad with other approved materials.

Specifications	Minimum tensile strength (p.s.i.) welded condition[1]	Minimum elongation in 2 inches (percent) welded condition (longitudinal)
AAR TC128, Gr. B	81,000	19
ASTM A 302, Gr. B	80,000	20
ASTM A 516	70,000	20
ASTM A 537, Class 1	70,000	23

[1] Maximum stresses to be used in calculations.

(b) *Aluminum alloy plate:* Aluminum alloy plate material used to fabricate tank shell and manway nozzle must be suitable for fusion welding and must comply with one of the following specifications with its indicated minimum tensile strength and elongation in the welded condition.

Specifications	Minimum tensile strength (p.s.i.) 0 temper, welded condition[3 6]	Minimum elongation in 2 inches (percent) 0 temper, welded condition (longitudinal)
ASTM B 209, Alloy 5052[1]	25,000	18
ASTM B 209, Alloy 5083[2]	38,000	16
ASTM B 209, Alloy 5086[1]	35,000	14
ASTM B 209, Alloy 5154[1]	30,000	18
ASTM B 209, Alloy 5254[1]	30,000	18
ASTM B 209, Alloy 5454[1]	31,000	18
ASTM B 209, Alloy 5652[1]	25,000	18

[1] For fabrication, the parent plate material may be 0, H112, or H32 temper, but design calculations must be based on minimum tensile strength shown.
[2] 0 temper only.
[3] Weld filler metal 5556 must not be used.
[4] Maximum stress to be used in calculations.

(c) *High alloy steel plate.* (1) High alloy steel plate must conform to the following specifications:

Specifications	Minimum tensile strength (p.s.i.) welded condition[1]	Minimum elongation in 2 inches (percent) weld metal (longitudinal)
ASTM A240, Type 304L	70,000	30
ASTM A240, Type 316L	70,000	30

[1] Maximum stresses to be used in calculations.

(2)(i) High alloy steels used to fabricate tank must be tested in accordance with the following procedures in ASTM Specification A262 titled, ''Standard Practices for Detecting Susceptibility to Intergranular Attack in Austenitic Stainless Steel,'' and must

exhibit corrosion rates not exceeding the following:

Test procedures	Material	Corrosion rate i.p.m.
Practice B	Types 304L and 316L.	0.0040
Practice C	Type 304L	0.0020

(ii) Type 304L and 316L test specimens must be given a sensitizing treatment prior to testing.

(d) All attachments welded to tank shell must be of approved material which is suitable for welding to the tank.

[Amdt. 179–10, 36 FR 21344, Nov. 6, 1971, as amended by Amdt. 179–32, 48 FR 27707, June 16, 1983; Amdt. 179–47, 58 FR 50237, Sept. 24, 1993; Amdt. 179–52, 61 FR 28679, June 5, 1996; Amdt 179–52, 61 FR 50255, Sept. 25, 1996]

§ 179.100–8 Tank heads.

(a) The tank head shape shall be an ellipsoid of revolution in which the major axis shall equal the diameter of the shell adjacent to the head and the minor axis shall be one-half the major axis.

(b) Each tank head made from steel which is required to be ''fine grain'' by the material specification, which is hot formed at a temperature exceeding 1700° F., must be normalized after forming by heating to a temperature between 1550° and 1700° F., by holding at that temperature for at least 1 hour per inch of thickness (30-minute minimum), and then by cooling in air. If the material specification requires quenching and tempering, the treatment specified in that specification must be used instead of the one specified above.

[29 FR 18995, Dec. 29, 1964. Redesignated, 32 FR 5606, Apr. 5, 1967 and amended by Amdt. 179–12, 39 FR 15038, Apr. 30, 1974]

§ 179.100–9 Welding.

(a) All joints shall be fusion-welded in compliance with the requirements of AAR Specifications for Tank Cars, appendix W. Welding procedures, welders and fabricators shall be approved. Also see § 179.104.

(b) [Reserved]

§ 179.100–10 Postweld heat treatment.

(a) After welding is complete, steel tanks and all attachments welded thereto must be postweld heat treated as a unit in compliance with the requirements of AAR Specifications for Tank Cars, appendix W.

(b) For aluminum tanks, postweld heat treatment is prohibited.

(c) Tank and welded attachments, fabricated from ASTM A 240 Type 304L or Type 316L materials do not require postweld heat treatment, but these materials do require a corrosion resistance test as specified in § 179.100–7(c)(2).

[Amdt. 179–10, 36 FR 21345, Nov. 6, 1971, as amended by Amdt. 179–47, 58 FR 50238, Sept. 24, 1993; Amdt. 179–52, 61 FR 28679, June 5, 1996]

§ 179.100–12 Manway nozzle, cover and protective housing.

(a) Manway nozzles must be of approved design of forged or rolled steel for steel tanks or of fabricated aluminum alloy for aluminum tanks, with access opening at least 18 inches inside diameter, or at least 14 inches by 18 inches around or oval. Nozzle must be welded to the tank and the opening reinforced in an approved manner in compliance with the requirements of AAR Specifications for Tank Cars, appendix E, Figure E10.

(b) Manway cover shall be machined to approved dimensions and be of forged or rolled carbon or alloy steel, rolled aluminum alloy or nickel when required by the lading. Minimum thickness is listed in § 179.101. Manway cover shall be attached to manway nozzle by through or stud bolts not entering tank, except as provided in § 179.103–2(a).

(c) Except as provided in § 179.103, protective housing of cast, forged or fabricated approved materials must be bolted to manway cover with not less than twenty ¾-inch studs. The shearing value of the bolts attaching protective housing to manway cover must not exceed 70 percent of the shearing value of bolts attaching manway cover to manway nozzle. Housing must have steel sidewalls not less than three-fourths inch in thickness and must be equipped with a metal cover not less than one-fourth inch in thickness that can be securely closed. Housing cover must have suitable stop to prevent cover striking loading and unloading connections and be hinged on one side

only with approved riveted pin or rod with nuts and cotters. Openings in wall of housing must be equipped with screw plugs or other closures.

[29 FR 18995, Dec. 29, 1964. Redesignated at 32 FR 5606, Apr. 5, 1967, and amended by Amdt. 179–10, 36 FR 21345, Nov. 6, 1971]

§179.100–13 Venting, loading and unloading valves, measuring and sampling devices.

(a) Venting, loading and unloading valves must be of approved design, made of metal not subject to rapid deterioration by the lading, and must withstand the tank test pressure without leakage. The valves shall be bolted to seatings on the manway cover, except as provided in §179.103. Valve outlets shall be closed with approved screw plugs or other closures fastened to prevent misplacement.

(b) The interior pipes of the loading and unloading valves shall be anchored and, except as prescribed in §179.102 or §179.103, may be equipped with excess flow valves of approved design.

(c) Gauging device, sampling valve and thermometer well are not specification requirements. When used, they shall be of approved design, made of metal not subject to rapid deterioration by the lading, and shall withstand the tank test pressure without leakage. Interior pipes of the gauging device and sampling valve, except as prescribed in §179.102 or §179.103, may be equipped with excess flow valves of approved design. Interior pipe of the thermometer well shall be anchored in an approved manner to prevent breakage due to vibration. The thermometer well shall be closed by an approved valve attached close to the manway cover, or other approved location, and closed by a screw plug. Other approved arrangements that permit testing thermometer well for leaks without complete removal of the closure may be used.

(d) An excess flow valve as referred to in this specification, is a device which closes automatically against the outward flow of the contents of the tank in case the external closure valve is broken off or removed during transit. Excess flow valves may be designed with a by-pass to allow the equalization of pressures.

(e) Bottom of tank shell may be equipped with a sump or siphon bowl, or both, welded or pressed into the shell. Such sumps or siphon bowls, if applied, are not limited in size and must be made of cast, forged or fabricated metal. Each sump or siphon bowl must be of good welding quality in conjunction with the metal of the tank shell. When the sump or siphon bowl is pressed in the bottom of the tank shell, the wall thickness of the pressed section must not be less than that specified for the shell. The section of a circular cross section tank to which a sump or siphon bowl is attached need not comply with the out-of-roundness requirement specified in AAR Specifications for Tank Cars, appendix W, W14.06. Any portion of a sump or siphon bowl not forming a part of cylinder of revolution must have walls of such thickness and be so reinforced that the stresses in the walls caused by a given internal pressure are no greater than the circumferential stress which would exist under the same internal pressure in the wall of a tank of circular cross section designed in accordance with §179.100–6(a). In no case less than that specified in §179.101–1(a).

[29 FR 18995, Dec. 29, 1964. Redesignated at 32 FR 5606, Apr. 5, 1967, and amended by Amdt. 179–10, 36 FR 21345, Nov. 6, 1971; Amdt. 179–40, 52 FR 13046, Apr. 20, 1987; Amdt. 179–42, 54 FR 38798, Sept. 20, 1989]

§179.100–14 Bottom outlets.

(a) Bottom outlets for discharge of lading is prohibited, except as provided in §179.103–3. If indicated in §179.101, tank may be equipped with a bottom washout of approved construction. If applied, bottom washout shall be in accordance with the following requirements.

(1) The extreme projection of the bottom washout equipment may not be more than that allowed by appendix E of the AAR Specifications for Tank Cars.

(2) Bottom washout shall be of cast, forged or fabricated metal and shall be fusion-welded to the tank. It shall be of good weldable quality in conjunction with metal of tank.

(3) If the bottom washout nozzle extends 6 inches or more from shell of

tank, a V-shaped breakage groove shall be cut (not cast) in the upper part of the outlet nozzle at a point immediately below the lowest part of the inside closure seat or plug. In no case may the nozzle wall thickness at the root of the ''V'' be more than ¼-inch. Where the nozzle is not a single piece, provision shall be made for the equivalent of the breakage groove. The nozzle must be of a thickness to insure that accidental breakage will occur at or below the ''V'' groove or its equivalent. On cars without continuous center sills, the breakage groove or its equivalent may not be more than 15 inches below the tank shell. On cars with continuous center sills, the breakage groove or its equivalent must be above the bottom of the center sill construction.

(4) The closure plug and seat shall be readily accessible or removable for repairs.

(5) The closure of the washout nozzle must be equipped with a ¾-inch solid screw plug. Plug must be attached by at least a ¼-inch chain.

(6) Joints between closures and their seats may be gasketed with suitable material.

(b) [Reserved]

[29 FR 18995, Dec. 29, 1964. Redesignated at 32 FR 5606, Apr. 5, 1967, and amended by Amdt. 179–10, 36 FR 21345, Nov. 6, 1971; Amdt. 179–40, 52 FR 13046, Apr. 20, 1987]

§ 179.100–16 Attachments.

(a) Reinforcing pads must be used between external brackets and shells if the attachment welds exceed 6 linear inches of ¼-inch fillet or equivalent weld per bracket or bracket leg. When reinforcing pads are used, they must not be less than one-fourth inch in thickness, have each corner rounded to a 1-inch minimum radius, and be attached to the tank by continuous fillet welds except for venting provisions. The ultimate shear strength of the bracket-to-reinforcing pad weld must not exceed 85 percent of the ultimate shear strength of the reinforcing pad-to-tank weld.

(b) Attachments not otherwise specified shall be applied by approved means.

[29 FR 18995, Dec. 29, 1964. Redesignated at 32 FR 5606, Apr. 5, 1967, and amended by Amdt. 179–10, 36 FR 21346, Nov. 6, 1971]

§ 179.100–17 Closures for openings.

(a) Closures shall be of approved design and made of metal not subject to rapid deterioration by the lading. Plugs, if used, shall be solid, with NPT threads, and shall be of a length which will screw at least six threads inside the face of fitting or tank.

(b) [Reserved]

§ 179.100–18 Tests of tanks.

(a) Each tank shall be tested by completely filling tank and manway nozzle with water or other liquid having similar viscosity, at a temperature which shall not exceed 100° F during the test; and applying the pressure prescribed in § 179.101. The tank shall hold the prescribed pressure for at least 10 minutes without leakage or evidence of distress.

(b) Insulated tanks shall be tested before insulation is applied.

(c) Caulking of welded joints to stop leaks developed during the foregoing test is prohibited. Repairs in welded joints shall be made as prescribed in AAR specifications for Tank Cars, appendix W.

(d) Testing of exterior heaters is not a specification requirement.

§ 179.100–19 Tests of safety relief valves.

(a) Each valve shall be tested by air or gas for compliance with § 179.15 before being put into service.

(b) [Reserved]

[29 FR 18995, Dec. 29, 1964. Redesignated at 32 FR 5606, Apr. 5, 1967, as amended at 62 FR 51561, Oct. 1, 1997]

§ 179.100–20 Stamping.

(a) To certify that the tank complies with all specification requirements, each tank shall be plainly and permanently stamped in letters and figures at least ⅜ inch high into the metal near the center of both outside heads as follows:

	Example of required stamping
Specification	DOT–105A100W
Material	ASTM A 516
Cladding material (if any)	ASTM A240–304
Tank builder's initials	Clad
Date of original test	ABC
Car assembler (if other than tanker builder).	00–0000 DEF
Water capacity	00000 lbs.

(b) [Reserved]

[29 FR 18995, Dec. 29, 1964. Redesignated at 32 FR 5606, Apr. 5, 1967, and amended by Amdt. 179–10, 36 FR 21346, Nov. 6, 1971; Amdt. 179–52, 61 FR 28679, June 5, 1996]

§179.101–1 Individual specification requirements.

In addition to §179.100, the individual specification requirements are as follows:

DOT specification	Insulation	Bursting pressure (psi)	Minimum plate thickness (inches)	Test pressure (psi)	Manway cover thickness	Bottom outlet	Bottom washout	Reference (179.***)
105A100ALW	Yes	500	5/8	100	[2] 2 1/2	No	No.	
105A200ALW	Yes	500	5/8	200	[2] 2 1/2	No	No.	
105A300ALW	Yes	750	5/8	300	[2] 2 5/8	No	No.	
105A100W	Yes	500	[3] 9/16	100	2 1/4	No	No.	
105A200W	Yes	500	[3] 9/16	200	2 1/4	No	No.	
105A300W	Yes	750	[1] 11/16	300	[7] 2 1/4	No	No.	
105A400W	Yes	1,000	[1] 11/16	400	[7] 2 1/4	No	No.	
105A500W	Yes	1,250	[1] 11/16	500	2 1/4	No	No	102–1, 102–2.
105A600W	Yes	1,500	[1] 11/16	600	2 1/4	No	No	102–4, 102–17.
109A100ALW	Optional	500	5/8	100	[2] 2 1/2	No	Optional.	
109A200ALW	Optional	500	5/8	200	[2] 2 1/2	No	Optional.	
109A300ALW	Optional	750	5/8	300	[2] 2 5/8	No	Optional.	
109A300W	Optional	500	[1] 11/16	300	2 1/4	No	Optional.	
112A200W	Optional [4]	500	[3] [5] 9/16	200	2 1/4	No	No.	
112A340W	Optional [4]	850	[1] 11/16	340	2 1/4	No	No.	
112A400W	Optional [4]	1,000	[1] 11/16	400	2 1/4	No	No.	
112A500W	Optional [4]	1,250	[1] 11/16	500	2 1/4	No	No.	
114A340W	Optional [4]	850	[1] 11/16	340	[6]	Optional	Optional	103.
114A400W	Optional [4]	1,000	[1] 11/16	400	[6]	Optional	Optional	103.
120A200ALW	Yes	500	5/8	200	[2] 2 1/2	Optional	Optional	103.
120A100W	Yes	500	[3] 9/16	100	2 1/4	Optional	Optional	103.
120A200W	Yes	500	[3] 9/16	200	2 1/4	Optional	Optional	103.
120A300W	Yes	750	[1] 11/16	300	2 1/4	Optional	Optional	103.
120A400W	Yes	1,000	[1] 11/16	400	2 1/4	Optional	Optional	103.
120A500W	Yes	1,250	[1] 11/16	500	2 1/4	Optional	Optional	103.

[1] When steel of 65,000 to 81,000 p.s.i. minimum tensile strength is used, the thickness of plates shall be not less than 5/8 inch, and when steel of 81,000 p.s.i. minimum tensile strength is used, the minimum thickness of plate shall be not less than 9/16 inch.

[2] When approved material other than aluminum alloys are used, the thickness shall be not less than 2 1/4 inches.

[3] When steel of 65,000 p.s.i. minimum tensile strength is used, minimum thickness of plates shall be not less than 1/2 inch.

[4] Tank cars not equipped with a thermal protection or an insulation system used for the transportation of a Class 2 (compressed gas) material must have at least the upper two-thirds of the exterior of the tank, including manway nozzle and all appurtenances in contact with this area, finished with a reflective coat of white paint.

[5] For inside diameter of 87 inches or less, the thickness of plates shall be not less than 1/2 inch.

[6] See AAR specifications for tank cars, Appendix E, E4.01 and § 179.103–2.

[7] When the use of nickel is required by the lading, the thickness shall not be less than two inches.

[Amdt. 179–52, 61 FR 28679, June 5, 1996]

§179.102 Special commodity requirements for pressure tank car tanks.

(a) In addition to §§179.100 and 179.101 the following requirements are applicable:

(b) [Reserved]

§179.102–1 Carbon dioxide, refrigerated liquid.

(a) Tank cars used to transport carbon dioxide, refrigerated liquid must comply with the following special requirements:

(1) All plates for tank, manway nozzle and anchorage of tanks must be made of carbon steel complying with ASTM Specification A 516, Grades 55, 60, 65, or 70, or AAR Specification TC128–78, Grade B. The ASTM A516 plate must also meet the Charpy V–Notch test requirements of ASTM A20–79b (see Table 16) in the longitudinal direction of rolling. The TC128 plate must also meet the Charpy V–Notch energy absorption requirements of 15 ft-lb minimum average for 3 specimens and 10 ft-lb minimum for one specimen at minus 50° F in the longitudinal direction of rolling in accord with ASTM Specification A 370. Production-welded test plates prepared as required by W4.00 of AAR Specifications for Tank Cars, appendix W, must include impact test specimens of weld metal and heat-affected zone. As an alternate, anchor legs may be fabricated of stainless steel, ASTM Specification A 240 Types 304, 304L, 316 or 316L for which impact tests are not required.

(2)—(6) [Reserved]

(b) [Reserved]

[29 FR 18995, Dec. 29, 1964. Redesignated at 32 FR 5606, Apr. 5, 1967, and amended by Amdt. 179–10, 36 FR 21347, Nov. 6, 1971; Amdt. 179–28, 46 FR 49906, Oct. 8, 1981; 46 FR 55266, Nov. 9, 1981; Amdt. 179–32, 48 FR 50440, 50441, Nov. 1, 1983; 49 FR 42736, Oct. 24, 1984; Amdt. 179–45, 55 FR 52728, Dec. 21, 1990; Amdt. 179–52, 61 FR 28680, June 5, 1996]

§179.102–2 Chlorine.

(a) Each tank car used to transport chlorine must comply with all of the following:

(1) Tanks must be fabricated from carbon steel complying with ASTM Specification A 516, Grade 70, or AAR Specification TC–128, Grade A or B.

(2)–(3) [Reserved]

(b) [Reserved]

[Amdt. 179–7, 36 FR 14697, Aug. 10, 1971; Amdt. 179–10, 36 FR 21346, Nov. 6, 1971, as amended by Amdt. 179–25, 44 FR 20433, Apr. 5, 1979; Amdt. 179–40, 52 FR 13046, Apr. 20, 1987; Amdt. 179–45, 55 FR 52728, Dec. 21, 1990; Amdt. 179–52, 61 FR 28680, June 5, 1996]

§179.102–4 Vinyl fluoride, inhibited.

Each tank used to transport vinyl fluoride, inhibited, must comply with the following special requirements:

(a) All plates for the tank must be fabricated of material listed in paragraph (b)(2) of this section, and appurtenances must be fabricated of material listed in paragraph (b)(1) or (b)(2) of this section.

(1) Stainless steel, ASTM Specification A240, Type 304, 304L, 316 or 316L, in which case impact tests are not required; or

(2) Steel complying with ASTM Specification A516; Grade 70; ASTM Specification A537, Class 1; or AAR Specification TC128, Grade B, in which case impact tests must be performed as follows:

(i) ASTM Specification A516 and A537 material must meet the Charpy V-notch test requirements, in longitudinal direction of rolling, of ASTM Specification A20.

(ii) AAR Specification TC128 material must meet the Charpy V-notch test requirements, in longitudinal direction of rolling, of 15 ft.-lb. minimum average for 3 specimens, with a 10 ft.-lb. minimum for any one specimen, at minus 50° F. or colder, in accordance with ASTM Specification A 370.

(iii) Production welded test plates must—

(A) Be prepared in accordance with AAR Specifications for Tank Cars, appendix W, W4.00;

(B) Include impact specimens of weld metal and heat affected zone prepared and tested in accordance with AAR Specifications for Tank Cars, appendix W, W9.00; and

(C) Meet the same impact requirements as the plate material.

(b) Insulation must be of approved material.

(c) Excess flow valves must be installed under all liquid and vapor valves, except safety relief valves.

(d) A thermometer well may be installed.

(e) Only an approved gaging device may be installed.

(f) A pressure gage may be installed.

(g) Aluminum, copper, silver, zinc, or an alloy containing any of these metals may not be used in the tank construction, or in fittings in contact with the lading.

(h) The jacket must be stenciled, adjacent to the water capacity stencil, ''MINIMUM OPERATING TEMPERATURE —— ° F.''

(i) The tank car and insulation must be designed to prevent the vapor pressure of the lading from increasing from the pressure at the maximum allowable filling density to the start-to-discharge pressure of the safety relief valve within 30 days, at an ambient temperature of 90° F.

[Amdt. 179–32, 48 FR 27707, June 16, 1983, as amended at 49 FR 24317, June 12, 1984; 49 FR 42736, Oct. 24, 1984; Amdt. 179–45, 55 FR 52728, Dec. 21, 1990; Amdt. 179–52, 61 FR 28680, June 5, 1996]

§ 179.102–17 Hydrogen chloride, refrigerated liquid.

Each tank car used to transport hydrogen chloride, refrigerated liquid must comply with the following special requirements:

(a) The tank car must comply with Specification DOT–105J600W and be designed for loading at minus 50° F. or colder.

(b) All plates for the tank must be fabricated of material listed in paragraph (b)(2) of this section, and appurtenances must be fabricated of material listed in paragraph (b)(1) or (b)(2) of this section.

(1) Stainless steel, ASTM Specification A240, Type 304, 304L, 316, or 316L, in which case impact tests are not required; or

(2) Steel complying with ASTM Specification A516, Grade 70; ASTM Specification A537, Class 1; or AAR Specification TC128, Grade B, in which case impact tests must be performed as follows:

(i) ASTM Specification A516 and A537 material must meet the Charpy V-notch test requirements, in longitudinal direction of rolling, of ASTM Specification A20.

(ii) AAR Specification TC128 material must meet the Charpy V-notch test requirements, in longitudinal direction of rolling of 15 ft.-lb. minimum average for 3 specimens, with a 10 ft.-lb. minimum for any one specimen, at minus 50° F. or colder, in accordance with ASTM Specification A 370.

(iii) Production welded test plates must—

(A) Be prepared in accordance with AAR Specifications for Tank Cars, appendix W, W4.00;

(B) include impact test specimens of weld metal and heat affected zone prepared and tested in accordance with AAR Specifications for Tank Cars, appendix W, W9.00; and

(C) meet the same impact requirements as the plate material.

(c) Insulation must be of approved material.

(d) Safety relief valves must be trimmed with monel or other approved material and equipped with a frangible disc of silver, polytetrafluoroethylene coated monel, or tantalum. Each safety relief device shall have the space between the frangible disc and the relief valve vented with a suitable auxiliary valve. The discharge from each safety relief valve must be directed outside the protective housing.

(e) Loading and unloading valves must be trimmed with Hastelloy B or C, monel, or other approved material, and identified as ''Vapor'' or ''Liquid''. Excess flow valves must be installed under all liquid and vapor valves, except safety relief valves.

(f) A thermometer well may be installed.

(g) Only an approved gaging device may be installed.

(h) A sump must be installed in the bottom of the tank under the liquid pipes.

(i) All gaskets must be made of, or coated with, polytetrafluoroethylene or other approved material.

(j) The tank car tank may be equipped with exterior cooling coils on top of the tank car shell.

(k) The jacket must be stenciled, adjacent to the water capacity stencil,

MINIMUM OPERATING TEMPERATURE —— ° F.

(l) The tank car and insulation must be designed to prevent the pressure of

the lading from increasing from the pressure at the maximum allowable filling density to the start-to-discharge pressure of the safety relief valve within 30 days, at an ambient temperature of 90° F.

[Amdt. 179–32, 48 FR 27708, June 16, 1983, as amended at 48 FR 50441, Nov. 1, 1983; 49 FR 24317, June 12, 1984; 49 FR 42736, Oct. 24, 1984; Amdt. 179–45, 55 FR 52728, Dec. 21, 1990]

§179.103 Special requirements for class 114A * * * tank car tanks.

(a) In addition to the applicable requirements of §§179.100 and 179.101 the following requirements shall be complied with:

(b) [Reserved]

§179.103–1 Type.

(a) Tanks built under this section may be of any approved cross section.

(b) Any portion of the tank shell not circular in cross section shall have walls of such thickness and be so reinforced that the stresses in the walls caused by a given internal pressure are no greater than the circumferential stresses which would exist under the same internal pressure in the wall of a tank of circular cross section designed in accordance with paragraphs §179.100–6 (a) and (b), but in no case shall the wall thickness be less than that specified in §179.101.

(c) [Reserved]

(d) Valves and fittings need not be mounted on the manway cover.

(e) One opening may be provided in each head for use in purging the tank interior.

[29 FR 18995, Dec. 29, 1964. Redesignated at 32 FR 5606, Apr. 5, 1967, and amended by Amdt. 179–50, 60 FR 49077, Sept. 21, 1995]

§179.103–2 Manway cover.

(a) The manway cover must be an approved design.

(b) If no valves or measuring and sampling devices are mounted on manway cover, no protective housing is required.

[29 FR 18995, Dec. 29, 1964. Redesignated at 32 FR 5606, Apr. 5, 1967, and amended by Amdt. 179–50, 60 FR 49077, Sept. 21, 1995]

§179.103–3 Venting, loading and unloading valves, measuring and sampling devices.

(a) Venting, loading and unloading valves, measuring and sampling devices, when used, shall be attached to a nozzle or nozzles on the tank shell or heads.

(b) These valves and appurtenances must be grouped in one location and, except as provided in §179.103–5, must be equipped with a protective housing with cover, or may be recessed into tank shell with cover. An additional set grouped in another location may be provided. Protective housing with cover, when used, must have steel sidewalls not less than three-fourths inch in thickness and a metal cover not less than one-fourth inch in thickness that can be securely closed. Underframe sills are an acceptable alternate to the protective housing cover, provided the arrangement is of approved design. For fittings recessed into tank shell, protective cover must be metal and not less than one-fourth inch in thickness.

(c) When tank car is used to transport liquefied flammable gases, the interior pipes of the loading, unloading, and sampling valves must be equipped with excess flow valves of approved design except when quick closing internal valves of approved design are used. When the interior pipe of the gaging device provides a means for the passage of lading from the interior to the exterior of the tank, it must be equipped with an excess flow valve of approved design or with an orifice not exceeding 0.060 inch.

[29 FR 18995, Dec. 29, 1964. Redesignated at 32 FR 5606, Apr. 5, 1967, and amended by Amdt. 179–10, 36 FR 21348, Nov. 6, 1971]

§179.103–4 Safety relief devices and pressure regulators.

(a) Safety relief devices and pressure regulators must be located on top of the tank near the center of the car on a nozzle, mounting plate or recess in the shell. Through or stud bolts, if used, must not enter the tank.

(b) Metal guard of approved design must be provided to protect safety relief devices and pressure regulators from damage.

[Amdt. 179–10, 36 FR 21348, Nov. 6, 1971]

§ 179.103–5 Bottom outlets.

(a) In addition to or in place of the venting, loading and unloading valves, measuring and sampling devices as prescribed in § 179.103–3, tanks may be equipped with approved bottom outlet valves. If applied, bottom outlet valves must meet the following requirements:

(1) On cars with center sills, a ball valve may be welded to the outside bottom of the tank or mounted on a pad or nozzle with a tongue and groove or male and female flange attachment, but in no case shall the breakage groove or equivalent extend below the bottom flange of the center sill. On cars without continuous center sills, a ball valve may be welded to the outside bottom of the tank or mounted with a tongue and groove or male and female flange attachment on a pad attached to the outside bottom of the tank. The mounting pad must have a maximum thickness of 2½ inches measured on the longitudinal centerline of the tank. The valve operating mechanism must be provided with a suitable locking arrangement to insure positive closure during transit.

(2) When internal bottom outlet valve is used in liquefied flammable gas service, the outlet of the valve must be equipped with an excess flow valve of approved design, except when a quick-closing internal valve of approved design is used. Protective housing is not required.

(3) Bottom outlet must be equipped with a liquid tight closure at its lower end.

(b) Bottom outlet equipment must be of approved design and must meet the following requirements:

(1) The extreme projection of the bottom outlet equipment may not be more than allowed by appendix E of the AAR Specifications for Tank Cars. All bottom outlet reducers and closures and their attachments shall be secured to car by at least ⅜-inch chain, or its equivalent, except that bottom outlet closure plugs may be attached by ¼-inch chain. When the bottom outlet closure is of the combination cap and valve type, the pipe connection to the valve shall be closed by a plug, cap, or approved quick coupling device. The bottom outlet equipment should include only the valve, reducers and closures that are necessary for the attachment of unloading fixtures. The permanent attachment of supplementary exterior fittings must be approved by the AAR Committee on Tank Cars.

(2) To provide for the attachment of unloading connections, the discharge end of the bottom outlet nozzle or reducer, the valve body of the exterior valve, or some fixed attachment thereto, shall be provided with one of the following arrangements or an approved modification thereof. (See appendix E. Fig. E17 of the AAR Specifications for Tank Cars for illustrations of some of the possible arrangements.)

(i) A bolted flange closure arrangement including a minimum 1-inch NPT pipe plug (see Fig. E17.1) or including an auxiliary valve with a threaded closure.

(ii) A threaded cap closure arrangement including a minimum 1-inch NPT pipe plug (see Fig. E17.2) or including an auxiliary valve with a threaded closure.

(iii) A quick-coupling device using a threaded plug closure of at least 1-inch NPT or having a threaded cap closure with a minimum 1-inch NPT pipe plug (see Fig. E17.3 through E17.5). A minimum 1-inch auxiliary test valve with a threaded closure may be substituted for the 1-inch pipe plug (see Fig E17.6). If the threaded cap closure does not have a pipe plug or integral auxiliary test valve, a minimum 1-inch NPT pipe plug shall be installed in the outlet nozzle above the closure (see Fig. E17.7).

(iv) A two-piece quick-coupling device using a clamped dust cap must include an in-line auxiliary valve, either integral with the quick-coupling device or located between the primary bottom outlet valve and the quick-coupling device. The quick-coupling device closure dust cap or outlet nozzle shall be fitted with a minimum 1-inch NPT closure (see Fig. E17.8 and E17.9).

(3) The valve operating mechanism must be provided with a suitable locking arrangement to insure positive closure during transit.

(4) If the outlet nozzle extends 6 inches or more from shell of tank, a V-shaped breakage groove shall be cut (not cast) in the upper part to the outlet nozzle at a point immediately below

the lowest part of value closest to the tank. In no case may the nozzle wall thickness at the roof of the ''V'' be more than ¼-inch. On cars without continuous center sills, the breakage groove or its equivalent may not be more than 15 inches below the tank shell. On cars with continuous center sills, the breakage groove or its equivalent must be above the bottom of the center sill construction.

(5) The valve body must be of a thickness which will insure that accidental breakage of the outlet nozzle will occur at or below the ''V'' groove, or its equivalent, and will not cause distortion of the valve seat or valve.

[Amdt. 179–10, 36 FR 21348, Nov. 6, 1971, as amended by Amdt. 179–40, 52 FR 13046, Apr. 20, 1987; Amdt. 179–41, 52 FR 36672, Sept. 30, 1987; Amdt. 179–50, 60 FR 49077, Sept. 21, 1995; Amdt. 179–52, 61 FR 28680, June 5, 1996; Amdt. 179–53, 61 FR 51342, Oct. 1, 1996]

Subpart D—Specifications for Non-Pressure Tank Car Tanks (Classes DOT–103, 104, 111AF, 111AW, and 115AW)

§179.200 General specifications applicable to non-pressure tank car tanks (Classes DOT–103, 104, and 111).

§179.200–1 Tank built under these specifications must meet the requirements of §§179.200, 179.201 and when applicable §179.202.

§179.200–3 Type.

Tank built under these specifications must be circular in cross section, with formed heads designed convex outward. When specified in §179.201–1, the tank must have at least one manway or one expansion dome with manway, and such other external projections as are prescribed herein. When the tank is divided into compartments, each compartment must be treated as a separate tank.

[Amdt. 179–10, 36 FR 21348, Nov. 6, 1971]

§179.200–4 Insulation.

(a) If insulation is applied, the tank shell and expansion dome when used must be insulated with an approved material. The entire insulation must be covered with a metal jacket of a thickness not less than 11 gauge (0.1196 inch) nominal (Manufacturer's Standard Gauge) and flashed around all openings so as to be weather tight. The exterior surface of a carbon steel tank and the inside surface of a carbon steel jacket must be given a protection coating.

(b) If insulation is a specification requirement, it shall be of sufficient thickness so that the thermal conductance at 60° F is not more than 0.225 Btu per hour, per square foot, per degree F temperature differential, unless otherwise provided in §179.201–1. If exterior heaters are attached to tank, the thickness of the insulation over each heater element may be reduced to one-half that required for the shell.

[29 FR 18995, Dec. 29, 1964. Redesignated at 32 FR 5606, Apr. 5, 1967, and amended by Amdt. 179–10, 36 FR 21349, Nov. 6, 1971; Amdt. 179–50, 60 FR 49078, Sept. 21, 1995]

§179.200–6 Thickness of plates.

(a) The wall thickness after forming of the tank shell, dome shell, and of 2:1 ellipsoidal heads must be not less than specified in §179.201–1, nor that calculated by the following formula:

$$t = \frac{Pd}{2SE}$$

where:

d=Inside diameter in inches;
E=0.9 Welded joint efficiency; except E=1.0 for seamless heads;
P=Minimum required bursting pressure in p.s.i.;
S=Minimum tensile strength of plate material in p.s.i. as prescribed in §179.200–7;
t=Minimum thickness of plate in inches after forming.

(b) The wall thickness after forming of 3:1 ellipsoidal heads must be not less than specified in §179.201–1, nor that calculated by the following formula:

$$t = \frac{Pd}{2SE} \times 1.83$$

where:

d=Inside diameter in inches;
E=0.9 Welded joint efficiency; except E=1.0 for seamless heads;
P=Minimum required bursting pressure in p.s.i.;
S=Minimum tensile strength of plate material in p.s.i. as prescribed in §179.200–7;

t=Minimum thickness of plate in inches after forming.

(c) The wall thickness after forming of a flanged and dished head must be not less than specified in § 179.201–1, nor that calculated by the following formula:

$$t = \frac{5PL}{6SE}$$

where:

E=0.9 Welded joint efficiency; except E=1.0 for seamless heads;
L=Main inside radius to which head is dished, measured on concave side in inches;
P=Minimum required bursting pressure in p.s.i.;
S=Minimum tensile strength of plate material in p.s.i. as prescribed in § 179.200–7;
t=Minimum thickness of plate in inches after forming.

(d) If plates are clad with material having tensile strength properties at least equal to the base plate, the cladding may be considered a part of the base plate when determining thickness. If cladding material does not have tensile strength at least equal to the base plate, the base plate alone must meet the thickness requirements.

(e) For a tank constructed of longitudinal sections, the minimum width of bottom sheet of the tank must be 60 inches measured on the arc, but in all cases the width must be sufficient to bring the entire width of the longitudinal welded joint, including welds, above the bolster.

(f) For a tank built of one piece cylindrical sections, the thickness specified for bottom sheet must apply to the entire cylindrical section.

(g) See § 179.200–9 for thickness requirements for a compartmented tank.

[Amdt. 179–10, 36 FR 21349, Nov. 6, 1971]

§ 179.200–7 Materials.

(a) Plate material used to fabricate the tank and, when used, expansion dome or manway nozzle material, must meet one of the following specifications with the indicated minimum tensile strength and elongation in the welded condition.

(b) *Carbon steel plate:* The maximum allowable carbon content must be 0.31 percent when the individual specification allows carbon content greater than this amount. The plates may be clad with other approved materials:

Specifications	Minimum tensile strength (p.s.i.) welded condition [1]	Minimum elongation in 2 inches (percent) weld metal (longitudinal)
AAR TC 128, Gr. B	81,000	19
ASTM A 516, Gr. 70	70,000	20

[1] Maximum stresses to be used in calculations.

(c) *Aluminum alloy plate:* Aluminum alloy plate must be suitable for welding and comply with one of the following specifications:

Specifications	Minimum tensile strength (p.s.i.) welded condition [3 6]	Minimum elongation in 2 inches (percent) 0 temper weld metal (longitudinal)
ASTM B 209, Alloy 5052 [1]	25,000	18
ASTM B 209, Alloy 5083 [2]	38,000	16
ASTM B 209, Alloy 5086 [1]	35,000	14
ASTM B 209, Alloy 5154 [1]	30,000	18
ASTM B 209, Alloy 5254 [1]	30,000	18
ASTM B 209, Alloy 5454 [1]	31,000	18
ASTM B 209, Alloy 5652 [1]	25,000	18

[1] For fabrication, the parent plate material may be 0, H112, or H32 temper, but design calculations must be based on minimum tensile strength shown.
[2] 0 temper only.
[3] Weld filler metal 5556 must not be used.
[4] Maximum stresses to be used in calculations.

(d) *High alloy steel plate:* High alloy steel plate must comply with one of the following specifications:

Specifications	Minimum tensile strength (p.s.i.) welded condition [1]	Minimum elongation in 2 inches (percent) weld metal (longitudinal)
ASTM A 240, Type 304	75,000	30
ASTM A 240, Type 304L	70,000	30
ASTM A 240, Type 316	75,000	30
ASTM A 240, Type 316L	70,000	30

[1] Maximum stresses to be used in calculations.
[2] High alloy steel materials used to fabricate tank and expansion dome, when used, must be tested in accordance with Practice A of ASTM Specification A 262 titled, 'Standard Practices for Detecting Susceptibility to Intergranular Attack in Austenitic Stainless Steels.' If the specimen does not pass Practice A, Practice B or C must be used and the corrosion rates may not exceed the following:

Test procedure	Material	Corrosion rate i.p.m.
Practice B	Types 304, 304L, 316, and 316L.	0.0040

Test procedure	Material	Corrosion rate i.p.m.
Practice C	Type 304L	.0020

Type 304L and Type 316L test specimens must be given a sensitizing treatment prior to testing. (A typical sensitizing treatment is 1 hour at 1250 F.)

(e) *Nickel plate:* Nickel plate must comply with the following specification:

Specifications	Minimum tensile strength (p.s.i.) welded condition [1]	Minimum elongation in 2 inches (percent) weld metal (longitudinal)
ASTM B 1622 [2]	40,000	20

[1] Maximum stresses to be used in calculations.
[2] When used as cladding for carbon steel plate, low-carbon nickel is required.

(f) *Manganese-molybdenum steel plate:* Manganese-molybdenum steel plate must be suitable for fusion welding and comply with the following specification:

Specifications	Minimum tensile strength (p.s.i.) welded condition [1]	Minimum elongation in 2 inches (percent) weld metal (longitudinal)
ASTM A 302, Gr. B	80,000	20

[1] Maximum stresses to be used in calculations.

(g) All parts and items of construction in contact with the lading must be made of material compatible with plate material and not subject to rapid deterioration by the lading, or be coated or lined with suitable corrosion resistant material.

(h) All external projections which may be in contact with the lading and all castings, forgings, or fabrications used for fittings or attachments to tank and expansion dome, when used, in contact with lading must be made of material to an approved specification. See AAR Specification for Tank Cars, appendix M, M4.05 for approved material specifications for castings for fittings.

[Amdt. 179–10, 36 FR 21349, Nov. 9, 1971; 36 FR 21893, Nov. 17, 1971, as amended by Amdt.179–28, 46 FR 49906, Oct. 8, 1981; Amdt. 179–40, 52 FR 13046, Apr. 20, 1987; Amdt. 179–52, 61 FR 28680, June 5, 1996]

§179.200–8 Tank heads.

(a) All external tank heads must be an ellipsoid of revolution in which the major axis must equal the diameter of the shell and the minor axis must be one-half the major axis.

(b) Internal compartment tank heads may be 2:1 ellipsoidal, 3:1 ellipsoidal, or flanged and dished to thicknesses as specified in §179.200–6. Flanged and dished heads must have main inside radius not exceeding 10 feet, and inside knuckle radius must not be less than 3¾ inches for steel, alloy steel, or nickel tanks, and not less than 5 inches for aluminum alloy tanks.

[Amdt. 179–10, 36 FR 21350, Nov. 6, 1971]

§179.200–9 Compartment tanks.

(a) When a tank is divided into compartments, by inserting interior heads, interior heads must be inserted in accordance with AAR Specifications for Tank Cars, appendix E, E7.00, and must comply with the requirements specified in §179.2011–1. Voids between compartment heads must be provided with at least one tapped drain hole at their lowest point, and a tapped hole at the top of the tank. Top hole must be closed, and the bottom hole may be closed, with not less than three-fourths inch nor more than 1½-inches solid pipe plugs having NPT threads.

(b) When the tank is divided into compartments by construction each compartment as a separate tank, these tanks shall be joined together by a cylinder made of plate, having a thickness not less than that required for the tank shell and applied to the outside surface of tank head flanges. The cylinder shall fit the straight flange portion of the compartment tank head tightly. The cylinder shall contact the head flange for a distance of at least two times the plate thickness, or a minimum of 1 inch, whichever is greater. The cylinder shall be joined to the head flange by a full fillet weld. Distance from head seam to cylinder shall not be less than 1½ inches or three times the plate thickness, whichever is greater. Voids created by the space between heads of tanks joined together to form a compartment tank shall be provided with a tapped drain hole at their lowest point and a tapped hole at top of tank. The

top hole shall be closed and the bottom hole may be closed with solid pipe plugs not less than ¾ inch nor more than 1½ inches having NPT threads.

[29 FR 18995, Dec. 29, 1964. Redesignated at 32 FR 5606, Apr. 5, 1967, and amended by Amdt. 179–10, 36 FR 21350, Nov. 6, 1971]

§ 179.200–10 Welding.

(a) All joints shall be fusion-welded in compliance with the requirements of AAR Specifications for Tank Cars, appendix W. Welding procedures, welders and fabricators shall be approved.

(b) Welding is not permitted on or to ductile iron or malleable iron fittings.

[29 FR 18995, Dec. 29, 1964. Redesignated at 32 FR 5606, Apr. 5, 1967, and amended by Amdt. 179–10, 36 FR 21350, Nov. 6, 1971]

§ 179.200–11 Postweld heat treatment.

After welding is complete, postweld heat treatment must be in compliance with the requirements of AAR Specifications for Tank Cars, appendix W, when specified in § 179.201.1.

[Amdt. 179–10, 36 FR 21350, Nov. 6, 1971]

§ 179.200–13 Manway ring or flange, safety relief device flange, bottom outlet nozzle flange, bottom washout nozzle flange and other attachments and openings.

(a) These attachments shall be fusion welded to the tank and reinforced in an approved manner in compliance with the requirements of appendix E, figure 10, of the AAR Specifications for Tank Cars.

(b) The opening in the manway ring must be at least 16 inches in diameter except that acid resistant lined manways must be at least 18 inches in diameter before lining.

(c) The manway ring or flange, shall be made of cast, forged or fabricated metal. The metal of the dome, tank, or nozzle must be compatible with the manway ring or flange, so that they may be welded together.

(d) The openings for the manway or other fittings shall be reinforced in an approved manner.

[Amdt. 179–40, 52 FR 13047, Apr. 20, 1987]

§ 179.200–14 Expansion capacity.

(a) Tanks shall have expansion capacity as prescribed in this subchapter. This capacity shall be provided in the tank for Class DOT–111A cars, or in a dome for Class DOT–103 and 104 type cars.

(b) For tank cars having an expansion dome, the expansion capacity is the total capacity of the tank and dome combined. The capacity of the dome shall be measured from the inside top of shell of tank to the inside top of dome or bottom of any vent pipe projecting inside of dome, except that when safety relief device is applied to side of dome, the effective capacity of the dome shall be measured from top of safety relief device opening inside of dome to inside top of shell of tank.

(c) The opening in the tank shell within the dome shall be at least 29 inches in diameter. When the opening in the tank shell exceeds 30 inches in diameter, the opening shall be reinforced in an approved manner. This additional reinforcement may be accomplished by the use of a dome opening of the flued-type as shown in appendix E, Figure E 10C of the AAR Specification for Tank Cars or by the use of reinforcing as outlined in Appendix E, E3.04 and Figures E10K and E10L. When the opening in the tank shell is less than the inside diameter of the dome, and the dome pocket is not closed off in an approved manner, dome pocket drain holes shall be provided in the tank shell with nipples projecting inside the tank at least 1-inch.

(d) The dome head shall be of approved contour and shall be designed for pressure on concave side.

(e) Aluminum alloy domes: (1) The dome shell thickness shall be calculated by the formula in § 179.200–6(a).

(2) The dome head may be an ellipsoid of revolution in which the major axis shall be equal to the diameter of the dome shall and the minor axis shall be one-half the major axis. The thickness in this case shall be determined by using formula in § 179.200–6(a).

(3) The dome head, if dished, must be dished to a radius not exceeding 96 inches. Thickness of dished dome head must be calculated by the formula in § 179.200–6(c).

(4) Tank shell shall be reinforced by the addition of a plate equal to or greater than shell in thickness and the cross sectional area shall exceed metal

removed for dome opening, or tank shell shall be reinforced by a seamless saddle plate equal to or greater than shell in thickness and butt welded to tank shell. The reinforcing saddle plate shall be provided with a fluid opening having a vertical flange of the diameter of the dome for butt welding shell of dome to the flange. The reinforcing saddle plate shall extend about the dome a distance measured along shell of tank at least equal to the extension at top of tank. Other approved designs may be used.

(f) For thickness of carbon or alloy steel domes, see §179.201–2.

[29 FR 18995, Dec. 29, 1964. Redesignated at 32 FR 5606, Apr. 5, 1967, and amended by Amdt. 179–10, 36 FR 21350, Nov. 6, 1971; Amdt. 179–28, 46 FR 49906, Oct. 8, 1981; Amdt. 179–52, 61 FR 28680, June 5, 1996]

§179.200–15 Closures for manways.

(a) Manway covers must be of approved type.

(b) Manway covers shall be designed to provide a secure closure of the manway.

(c) Manway covers must be of approved cast, forged, or fabricated metals. Malleable iron, if used, must comply with ASTM A47–68, Grade 35018. Cast iron manway covers must not be used.

(d) All joints between manway covers and their seats shall be made tight against leakage of vapor and liquid by use of gaskets of suitable material.

(e) For other manway cover requirements see §179.201–1.

[29 FR 18995, Dec. 29, 1964. Redesignated at 32 FR 5606, Apr. 5, 1967, and amended by Amdt. 179–10, 36 FR 21350, Nov. 6, 1971; Amdt. 179–37, 50 FR 11066, Mar. 19, 1985]

§179.200–16 Gauging devices, top loading and unloading devices, venting and air inlet devices.

(a) When installed, these devices shall be of an approved design which will prevent interchange with any other fixture, and be tightly closed. Unloading pipes shall be securely anchored within the tank. Each tank or compartment may be equipped with one separate air connection.

(b) When the characteristics of the commodity for which the car is authorized are such that these devices must be equipped with valves or fittings to permit the loading and unloading of the contents, these devices, including valves, shall be of an approved design, and be provided with a protective housing except when plug or ball type valves with operating handles removed are used. Provision shall be made for closing pipe connections of valves.

(c) A tank may be equipped with a vacuum relief valve of an approved design. Protective housing is not required.

(d) When using a visual gauging device on a car with a hinged manway cover, an outage scale visible through the manway opening shall be provided. If loading devices are applied to permit tank loading with cover closed, a telltale pipe may be provided. Telltale pipe shall be capable of determining that required outage is provided. Pipe shall be equipped with ¼ inch minimum NPT control valve mounted outside tank and enclosed within a housing. Other approved devices may be used in lieu of outage scale or telltale pipe.

(e) Bottom of tank shell may be equipped with a sump or siphon bowl, or both, welded or pressed into the shell. Such sumps or siphon bowls, if applied are not limited in size and must be made of cast, forged, or fabricated metal. Each sump or siphon bowl must be of good welding quality in conjunction with the metal of the tank shell. When sump or siphon bowl is pressed in the bottom of the tank shell, the wall thickness of the pressed section must not be less than that specified for the shell. The section of a circular cross section tank to which a sump or siphon bowl is attached need not comply with the out-of-roundness requirement specified in appendix W, W14.06, of the AAR Specifications for Tank Cars. Any portion of a sump or siphon bowl not forming a part of a cylinder of revolution must have walls of such thickness and be so reinforced that the stresses in the walls caused by a given internal pressure are not greater than the circumferential stress which would exist under the same internal pressure in the wall of a tank of circular cross section designed in accordance with §179.200–6 (a) and (d). In no case shall the wall thickness be less than that specified in §179.201–1(a).

(f) When top loading and discharge devices, or venting and air inlet devices are installed with exposed piping to a removed location, shutoff valves must be applied directly to reinforcing pads or nozzles at their communication through the tank shell, and must be enclosed in a protective housing with provision for a seal. The piping must include breakage grooves, and suitable bracing. Relief valves must be applied to liquid lines for protection in case lading is trapped. Provision must be made to insure closure of the valves while the car is in transit.

(g) Protective housing, when required, must be fabricated of approved material and have cover and sidewalls not less than 0.119 inch in thickness.

[29 FR 18995, Dec. 29, 1964. Redesignated at 32 FR 5606, Apr. 5, 1967, and amended by Amdt. 179–10, 36 FR 21350, Nov. 6, 1971; Amdt. 179–52, 61 FR 28680, June 5, 1996]

§ 179.200–17 Bottom outlets.

(a) If indicated in § 179.201–1, tank may be equipped with bottom outlet. Bottom outlet, if applied, must comply with the following requirements:

(1) The extreme projection of the bottom outlet equipment may not be more than that allowed by appendix E of the AAR Specifications for Tank Cars. All bottom outlet reducers and closures and their attachments shall be secured to the car by at least ⅜-inch chain, or its equivalent, except that the bottom outlet closure plugs may be attached by ¼-inch chain. When the bottom outlet closure is of the combination cap and valve type, the pipe connection to the valve shall be closed by a plug, cap, or approved quick coupling device. The bottom outlet equipment should include only the valve, reducers and closures that are necessary for the attachment of unloading fixtures. The permanent attachment of supplementary exterior fittings shall be approved by the AAR Committee on Tank Cars.

(2) Bottom outlet must be of approved construction, and be provided with a liquid-tight closure at its lower end.

(3) On cars with center sills, a ball valve may be welded to the outside bottom of the tank or mounted on a pad or nozzle with a tongue and groove or male and female flange attachment. In no case shall the breakage groove or equivalent extend below the bottom flange of the center sill. On cars without continuous center sills, a ball valve may be welded to the outside bottom of the tank or mounted with a tongue and groove or male and female flange attachment on a pad attached to the outside bottom of the tank. The mounting pad must have a maximum thickness of 2½ inches measured on the longitudinal centerline of the tank. The valve operating mechanism must be provided with a suitable locking arrangement to insure positive closure during transit.

(4) The valve operating mechanism for valves applied to the interior of the tank, and outlet nozzle construction, must insure against the unseating of the valve due to stresses or shocks incident to transportation.

(5) Bottom outlet nozzle of interior valves and the valve body of exterior valves, must be of cast, fabricated, or forged metal. If welded to tank, they must be of good weldable quality in conjunction with metal of tank.

(6) To provide for the attachment of unloading connections, the discharge end of the bottom outlet nozzle or reducer, the valve body of the exterior valve, or some fixed attachment thereto, shall be provided with one of the following arrangements or an approved modification thereof. (See appendix E. Fig. E17 of the AAR Specifications for Tank Cars for illustrations of some of the possible arrangements.)

(i) A bolted flange closure arrangement including a minimum 1-inch NPT pipe plug (see Fig. E17.1) or including an auxiliary valve with a threaded closure.

(ii) A threaded cap closure arrangement including a minimum 1-inch NPT pipe plug (see Fig. E17.2) or including an auxiliary valve with a threaded closure.

(iii) A quick-coupling device using a threaded plug closure of at least 1-inch NPT or having a threaded cap closure with a minimum 1-inch NPT pipe plug (see Fig. E17.3 through E17.5). A minimum 1-inch auxiliary test valve with a threaded closure may be substituted for the 1-inch pipe plug (see Fig. E17.6). If the threaded cap closure does not have a pipe plug or integral auxiliary test valve, a minimum 1-inch NPT pipe

plug shall be installed in the outlet nozzle above the closure (see Fig. E17.7).

(iv) A two-piece quick-coupling device using a clamped dust cap must include an in-line auxiliary valve, either integral with the quick-coupling device or located between the primary bottom outlet valve and the quick-coupling device. The quick-coupling device closure dust cap or outlet nozzle shall be fitted with a minimum 1-inch NPT closure (see Fig. E17.8 and E17.9).

(7) If the outlet nozzle extends 6 inches or more from the shell of the tank, a V-shaped breakage groove shall be cut (not cast) in the upper part of the outlet nozzle at a point immediately below the lowest part of valve closest to the tank. In no case may the nozzle wall thickness at the root of the ''V'' be more than ¼ inch. The outlet nozzle on interior valves or the valve body on exterior valves may be steam jacketed, in which case the breakage groove or its equivalent must be below the steam chamber but above the bottom of center sill construction. If the outlet nozzle is not a single piece, or if exterior valves are applied, provisions shall be made for the equivalent of the breakage groove. On cars without continuous center sills, the breakage groove or its equivalent must be no more than 15 inches below the tank shell. On cars with continuous center sills, the breakage groove or its equivalent must be above the bottom of the center sill construction.

(8) The flange on the outlet nozzle or the valve body of exterior valves must be of a thickness which will prevent distortion of the valve seat or valve by any change in contour of the shell resulting from expansion of lading, or other causes, and which will insure that accidental breakage of the outlet nozzle will occur at or below the ''V'' groove, or its equivalent.

(9) The valve must have no wings or stem projecting below the ''V'' groove or its equivalent. The valve and seat must be readily accessible or removable for repairs, including grinding.

(10) The valve operating mechanism on interior valves must have means for compensating for variation in the vertical diameter of the tank produced by expansion, weight of the liquid contents, or other causes, and may operate from the interior of the tank, but in the event the rod is carried through the dome, or tank shell, leakage must be prevented by packing in stuffing box or other suitable seals and a cap.

(b) If indicated in §179.201–1, tank may be equipped with bottom washout of approved construction. If applied, bottom washout shall be in accordance with the following requirements:

(1) The extreme projection of the bottom washout equipment may not be more than that allowed by appendix E of the AAR Specifications for Tank Cars.

(2) Bottom washout shall be of cast, forged or fabricated metal. If welded to tank, they shall be of good weldable quality in conjunction with metal of tank.

(3) If the washout nozzle extends 6 inches or more from the shell of the tank, a V-shaped breakage groove shall be cut (not cast) in the upper part of the nozzle at a point immediately below the lowest part of the inside closure seat or plug. In no case may the nozzle wall thickness at the root of the ''V'' be more than ¼ inch. Where the nozzle is not a single piece, provisions shall be made for the equivalent of the breakage groove. The nozzle must be of a thickness to insure that accidental breakage will occur at or below the ''V'' groove or its equivalent. On cars without continuous center sills, the breakage groove or its equivalent may not be more than 15 inches below the outer shell. On cars with continuous center sills, the breakage groove or its equivalent must be above the bottom of the center sill construction.

(4) The closure plug and seat must be readily accessible or removable for repairs, including grinding.

(5) The closure of the washout nozzle must be equipped with a ¾-inch solid screw plug. Plug must be attached by at least a ¼-inch chain.

(6) Joints between closures and their seats may be gasketed with suitable material.

[29 FR 18995, Dec. 29, 1964. Redesignated at 32 FR 5606, Apr. 5, 1967, and amended by Amdt. 179–10, 36 FR 21351, Nov. 6, 1971; Amdt. 179–40, 52 FR 13047, Apr. 20, 1987]

§ 179.200–19 Reinforcements, when used, and appurtenances not otherwise specified.

(a) All attachments to tank and dome shall be applied by approved means. Rivets if used shall be caulked inside and outside.

(b) Reinforcing pads must be used between external brackets and shells if the attachment welds exceed 6 lineal inches of ¼-inch fillet or equivalent weld per bracket or bracket leg. When reinforcing pads are used, they must not be less than one-fourth inch in thickness, have each corner rounded to a 1 inch minimum radius, and be attached to the tank by continuous fillet welds except for venting provisions. The ultimate shear strength of the bracket to reinforcing pad weld must not exceed 85 percent of the ultimate shear strength of the reinforcing pad to tank weld.

[29 FR 18995, Dec. 29, 1964. Redesignated at 32 FR 5606, Apr. 5, 1967, and amended by Amdt. 179–10, 36 FR 21351, Nov. 6, 1971]

§ 179.200–21 Closures for openings.

(a) All plugs shall be solid, with NPT threads, and shall be of a length which will screw at least 6 threads inside the face of fitting or tank. Plugs, when inserted from the outside of tank heads, shall have the letter ''S'' at least ⅜ inch in size stamped with steel stamp or cast on the outside surface to indicate the plug is solid.

(b) [Reserved]

§ 179.200–22 Test of tanks.

(a) Each tank shall be tested by completely filling the tank and dome or nozzles with water, or other liquid having similar viscosity, of a temperature which shall not exceed 100° F. during the test; and applying the pressure prescribed in § 179.201–1. Tank shall hold the prescribed pressure for at least 10 minutes without leakage or evidence of distress. All rivets and closures, except safety relief valves or safety vents, shall be in place when test is made.

(b) Insulated tanks shall be tested before insulation is applied.

(c) Rubber-lined tanks shall be tested before rubber lining is applied.

(d) Caulking of welded joints to stop leaks developed during the foregoing tests is prohibited. Repairs in welded joints shall be made as prescribed in AAR Specifications for Tank Cars, appendix W.

§ 179.200–23 Tests of safety relief valves.

(a) Each valve shall be tested by air or gas for compliance with § 179.15 before being put into service.

(b) [Reserved]

[29 FR 18995, Dec. 29, 1964. Redesignated at 32 FR 5606, Apr. 5, 1967, as amended at 62 FR 51561, Oct. 1, 1997]

§ 179.200–24 Stamping.

(a) To certify that the tank complies with all specification requirements, each tank shall be plainly and permanently stamped in letters and figures at least ⅜ inch high into the metal near the center of both outside heads as follows:

	Example of required stamping
Specification	DOT–103–W
Material	ASTM A 516–GR 70
Cladding material (if any)	ASTM A240–304 Clad
Tank builder's initials	ABC
Date of original test	00–0000
Car assembler (if other than tank builder).	DEF

(b) On Class DOT–111 tank cars, the last numeral of the specification number may be omitted from the stamping; for example, DOT–111A100W.

[29 FR 18995, Dec. 29, 1964. Redesignated at 32 FR 5606, Apr. 5, 1967, and amended by Amdt. 179–10, 36 FR 21351, Nov. 6, 1971; Amdt. 179–52, 61 FR 28680, June 5, 1996]

§ 179.201–1 Individual specification requirements.

In addition to § 179.200, the individual specification requirements are as follows:

DOT Specification [1]	Insulation	Bursting pressure (psi)	Minimum plate thickness (inches)	Test pressure (psi)	Bottom outlet	Bottom washout	References (179.201 - ***)
103A–ALW	Optional	240	½	60	No	Optional.	
103AW	Optional	240	179.201–2	60	No	Optional.	
103ALW	Optional	240	½	60	Optional	Optional	6(a).
103ANW	Optional	240	179.201–2	60	No	Optional	6(d).
103BW	Optional	240	179.201–2	60	No	No	6(b), 3.
103CW	Optional	240	179.201–2	60	No	No	6(c), 4,5.
103DW	Optional	240	179.201–2	60	Optional	Optional	6(a), 6(c), 4, 5.
103EW	Optional	240	179.201–2	60	No	Optional	6(c), 4, 5.
103W	Optional	240	179.201–2	60	Optional	Optional	6(a).
104W	Yes	240	179.201–2	60	Optional	Optional	6(a).
111A60ALW1	Optional	240	½	60	Optional	Optional	6(a).
111A60ALW2	Optional	240	½	60	No	Optional.	
111A60W1	Optional	240	7/16	60	Optional	Optional	6(a).
111A60W2	Optional	240	7/16	60	No	Optional.	
111A60W5	Optional	240	7/16	60	No	No	3, 6(b).
111A60W6	Optional	240	7/16	60	Optional	Optional	4, 5, 6(a), 6(c).
111A60W7	Optional	240	7/16	60	No	No	4, 5, 6(a).
111A100ALW1	Optional	500	⅝	100	Optional	Optional	6(a).
111A100ALW2	Optional	500	⅝	100	No	Optional.	
111A100W1	Optional	500	7/16	100	Optional	Optional	6(a).
111A100W2	Optional	500	7/16	100	No	Optional.	
111A100W3	Yes	500	7/16	100	Optional	Optional	6(a).
111A100W4	Yes (see 179.201–11)	500	7/16	100	No	No	6(a), 8, 10.
111A100W5	Optional	500	7/16	100	No	No	3.
111A100W6	Optional	500	7/16	100	Optional	Optional	4, 5, 6(a) and 6(c).
111A100W7	Optional	500	7/16	100	No	No	4, 5, 6(c).

[1] Tanks marked ''ALW'' are constructed from aluminum alloy plate; ''AN'' nickel plate; ''CW,'' ''DW,'' ''EW,'' ''W6,'' and ''W7'' high alloy steel or manganese-molybdenum steel plate; and those marked ''BW'' or ''W5'' must have an interior lining that conforms to § 179.201–3.

[Amdt. 179–52, 61 FR 28680, June 5, 1996]

§ 179.201–2 Minimum plate thickness.

(a) The minimum plate thickness, after forming, must be as follows:

Inside diameter of tanks	Bottom sheets	Shell sheets	Expansion dome sheets	2:1 ellipsoidal heads	3:1 ellipsoidal and dished tank heads	Expansion dome heads	Interior compartment heads
	Inches						
60 inches or under	7/16	1/4	5/16	7/16	1/2	5/16	5/16
Over 60 to 78 inches	7/16	5/16	5/16	7/16	1/2	5/16	5/16
Over 78 to 96 inches	1 1/2	3/8	5/16	7/16	1/2	5/16	3/8
Over 96 to 112 inches	1 1/2	7/16	5/16	7/16	9/16	5/16	7/16
Over 112 to 122 inches	1/2	1/2	5/16	1/2	5/8	5/16	1/2

[1] May be reduced to 7/16 inch when approved steels having tensile strength of 65,000 psi or higher are used.

(b) [Reserved]

[29 FR 18995, Dec. 29, 1964. Redesignated at 32 FR 5606, Apr. 5, 1967, and amended by Amdt. 179–10, 36 FR 21352, Nov. 6, 1971]

§ 179.201–3 Lined tanks.

(a) Rubber-lined tanks.

(1) Each tank or each compartment thereof must be lined with acid-resistant rubber or other approved rubber compound vulcanized or bonded directly to the metal tank, to provide a nonporous laminated lining, at least 5/32-inch thick, except overall rivets and seams formed by riveted attachments in the lining must be double thickness. The rubber lining must overlap at least 1½ inches at all edges which must be straight and be beveled to an angle of approximately 45, or butted edges of lining must be sealed with a 3-inch minimum strip of lining having 45 beveled edges.

(2) As an alternate method, the lining may be joined with a skived butt seam then capped with a separate strip of lining 3 inches wide having 45 beveled edges. An additional rubber reinforcing pad at least 4½ feet square and at least ½-inch thick must be applied by vulcanizing to the lining on bottom of tank directly under the manway opening. The edges of the rubber pad must be beveled to an angle of approximately 45. An opening in this pad for sump is permitted. No lining must be under tension when applied except due to conformation over rivet heads. Interior of tank must be free from scale, oxidation, moisture, and all foreign matter during the lining operation.

(3) Other approved lining materials may be used provided the material is resistant to the corrosive or solvent action of the lading in the liquid or gas phase and is suitable for the service temperatures.

(b) Before a tank car tank is lined with rubber, or other rubber compound, a report certifying that the tank and its equipment have been brought into compliance with spec. DOT–103B, 103BW, 111A60W5, or 111A100W5 must be furnished by car owner to the party who is to apply the lining. A copy of this report in approved form, certifying that tank has been lined in compliance with all requirements of one of the above specifications, must be furnished by party lining tank to car owner. Reports of the latest lining application must be retained by the car owner until the next relining has been accomplished and recorded.

(c) All rivet heads on inside of tank must be buttonhead, or similar shape, and of uniform size. The under surface of heads must be driven tight against the plate. All plates, castings and rivet heads on the inside of the tank must be calked. All projecting edges of plates, castings and rivet heads on the inside of the tank must be rounded and free from fins and other irregular projections. Castings must be free from porosity.

(d) All surfaces of attachments or fittings and their closures exposed to the lading must be covered with at least 1/8-

inch acid resistant material. Attachments made of metal not affected by the lading need not be covered with rubber or other acid resistant material.

(e) Hard rubber or polyvinyl chloride may be used for pressure retaining parts of safety vents provided the material is resistant to the corrosive or solvent action of the lading in the liquid or gas phase and is suitable for the service temperatures.

(f) Polyvinyl chloride lined tanks. Tank car tanks or each compartment thereof may be lined with elastomeric polyvinyl chloride having a minimum lining thickness of three thirty-seconds inch.

(g) Polyurethane lined tanks. Tank car tanks or each compartment thereof may be lined with elastomeric polyurethane having a minimum lining thickness of one-sixteenth inch.

[Amdt. 179–10, 36 FR 21352, Nov. 6, 1971]

§179.201–4 Material.

All fittings, tubes, and castings and all projections and their closures, except for protective housing, must also meet the requirements specified in ASTM specification A 262, except that when preparing the specimen for testing the carburized surface may be finished by grinding or machining.

[Amdt. 179–10, 36 FR 21353, Nov. 6, 1971, as amended by Amdt. 179–52, 61 FR 28681, June 5, 1996; Amdt. 179–52, 61 FR 50255, Sept. 25, 1996]

§179.201–5 Postweld heat treatment and corrosion resistance.

(a) Tanks and attachments welded directly thereto must be postweld heat treated as a unit at the proper temperature except as indicated below. Tanks and attachments welded directly thereto fabricated from ASTM Specification A 240 Type 430A, Type 304 and Type 316 materials must be postweld heat treated as a unit and must be tested to demonstrate that they possess the corrosion resistance specified in §179.200–7(d), Footnote 2. Tanks and attachments welded directly thereto, fabricated from ASTM Specification A 240 Type 304L or Type 316L materials are not required to be postweld heat treated.

(b) Tanks and attachments welded directly thereto, fabricated from ASTM Specification A 240 Type 304L and Type 316 materials must be tested to demonstrate that they possess the corrosion resistance specified in §179.200–7(d), Footnote 2.

[Amdt. 179–10, 36 FR 21353, Nov. 6, 1971, as amended by Amdt. 179–52, 61 FR 28681, June 5, 1996]

§179.201–6 Manways and manway closures.

(a) The manway cover for spec. DOT 103ALW, 103DW, 103W, 104W, 111A60–ALW1, 111A60W1, 111A100ALW1, 111A–100W1, 111A100W3, or 111A100W6 must be designed to make it impossible to remove the cover while the interior of the tank is subjected to pressure.

(b) The manway cover for spec. DOT 103BW, 11A60W5, or 111A100W5 must be made of a suitable metal. The top, bottom and edge of manway cover must be acid resistant material covered as prescribed in §179.201–3. Through-bolt holes must be lined with acid resistant material at least one-eighth inch in thickness. Cover made of metal not affected by the lading need not be acid resistant material covered.

(c) The manway ring and cover for spec. DOT–103CW, 103DW, 103EW, 111360W7, or 11A100W6 must be made of the metal and have the same inspection procedures specified in AAR Specifications for Tanks Cars Appendix M, M3.03.

(d) The manway ring for DOT 103 ANW must be made of cast, forged or fabricated nickel and be a good weldable quality in conjunction with the metal of the dome. Manway cover must be made of nickel.

[Amdt. 179–10, 36 FR 21353, Nov. 6, 1971]

§179.201–8 Sampling device and thermometer well.

(a) Sampling valve and thermometer well are not specification requirements. When used, they must be of approved design, made of metal not subject to rapid deterioration by lading, and must withstand a pressure of 100 pounds per square inch without leakage. Interior pipes of the sampling valve must be equipped with excess flow valves of an approved design. Interior pipe of thermometer well must be closed by an approved valve attached close to fitting where it passes through

the tank and closed by a screw plug. Other approved arrangements that permit testing thermometer well for leaks without complete removal of the closure may be used.

(b) [Reserved]

§ 179.201–9 Gauging device.

A gauging device of an approved design must be applied to permit determining the liquid level of the lading. The gauging device must be made of materials not subject to rapid deterioration by the lading. When the interior pipe of the gauging device provides a means for passage of the lading from the interior to the exterior of the tank, it must be equipped with an excess flow valve of an approved design. If the opening for passage of lading through the gauging device is not more than 0.060 inch diameter an excess flow valve is not required. The gauging device must be provided with a protective housing.

[Amdt. 179–10, 36 FR 21353, Nov. 6, 1971]

§ 179.201–10 Water capacity marking.

(a) Water capacity of the tank in pounds stamped plainly and permanently in letters and figures at least ⅜ inch high into the metal of the tank immediately below the stamped marks specified in § 179.200–24(a). This mark shall also be stenciled on the jacket immediately below the dome platform and directly behind or within 3 feet of the right or left side of the ladder, or ladders, if there is a ladder on each side of the tank, in letters and figures at least 1½ inches high as follows:

WATER CAPACITY

000000 Pounds

(b) [Reserved]

§ 179.201–11 Insulation.

(a) Insulation shall be of sufficient thickness so that the thermal conductance at 60° F. is not more than 0.075 Btu per hour, per square foot, per degree F. temperature differential.

(b) [Reserved]

§ 179.220 General specifications applicable to nonpressure tank car tanks consisting of an inner container supported within an outer shell (class DOT–115).

§ 179.220–1 Tanks built under these specifications must meet the requirements of § 179.220, § 179.221, and § 179.222.

§ 179.220–3 Type.

(a) Tanks built under these specifications must consist of an inner container, a support system for the inner container, and an outer shell.

(b) The inner container must be a fusion welded tank of circular cross section with formed heads designed convex outward and must have a manway on top of the tank as prescribed herein. When the inner container is divided into compartments, each compartment must be considered a separate container.

(c) The outer shell must be a fusion welded tank with formed heads designed convex outward.

[Amdt. 179–9, 36 FR 21340, Nov. 6, 1971]

§ 179.220–4 Insulation.

The annular space between the inner container and the outer shell must contain an approved insulation material.

[Amdt. 179–9, 36 FR 21340, Nov. 6, 1971]

§ 179.220–6 Thickness of plates.

(a) The wall thickness, after forming of the inner container shell and 2:1 ellipsoidal heads must be not less than specified in § 179.221–1, or not less than that calculated by the following formula:

$$t = \frac{Pd}{2SE}$$

where:

d=Inside diameter in inches;

E=0.9 welded joint efficiency; except E=1.0 for seamless heads;

P=Minimum required bursting pressure in p.s.i.;

S=Minimum tensile strength of plate material in p.s.i. as prescribed in AAR Specifications for Tank Cars, appendix M, Table M1;

t=Minimum thickness of plate in inches after forming.

(b) The wall thickness after forming of the inner container heads, if flanged and dished, must be not less than specified in §179.221–1, or not less than that calculated by the following formula:

$$t = \frac{5PL}{6SE}$$

where:

E=0.9 welded joint efficiency; except E=1.0 for seamless heads;

L=Main inside radius to which head is dished, measured on concave side in inches;

P=Minimum required bursting pressure in p.s.i.;

S=Minimum tensile strength of plate material in p.s.i. as prescribed in AAR Specifications for Tank Cars, appendix M., Table M1;

t=Minimum thickness of plate in inches after forming.

(c) The wall thickness after forming of the cylindrical section and heads of the outer shell must be not less than seven-sixteenths of an inch.

(d) See §179.220–9 for plate thickness requirements for inner container when divided into compartments.

[Amdt. 179–9, 36 FR 21340, Nov. 6, 1971]

§179.220–7 Materials.

(a) The plate material used to fabricate the inner container and nozzles must meet one of the following specifications and with the indicated minimum tensile strength and elongation in the welded condition.

(b) Carbon steel plate: The maximum allowable carbon content must be 0.31 percent when the individual specification allows carbon content greater than this amount. The plates may be clad with other approved materials.

Specifications	Minimum tensile strength (p.s.i.) welded condition [1]	Minimum elongation in 2 inches (percent) weld metal (longitudinal)
AAR TC 128, Gr. B	81,000	19
ASTM A 516, Gr. 70	70,000	20

[1] Maximum stresses to be used in calculations.

(c) Aluminum alloy plate: Aluminum alloy plate must be suitable for welding and comply with one of the following specifications:

Specifications	Minimum tensile strength (p.s.i.) welded condition [3 6]	Minimum elongation in 2 inches (percent) weld metal (longitudinal)
ASTM B 209, Alloy 5052 [1]	25,000	18
ASTM B 209, Alloy 5083 [2]	38,000	16
ASTM B 209, Alloy 5086 [1]	35,000	14
ASTM B 209, Alloy 5154 [1]	30,000	18
ASTM B 209, Alloy 5254 [1]	30,000	18
ASTM B 209, Alloy 5454 [1]	31,000	18
ASTM B 209, Alloy 5652 [1]	25,000	18

[1] For fabrication, the parent plate material may be 0 H112, or H32 temper, but design calculations must be based on the minimum tensile strength shown.
[2] 0 temper only.
[3] Weld filler metal 5556 must not be used.
[4] Not authorized for tank shells, manways or domes.
[5] T6 temper only.
[6] Maximum stresses to be used in calculations.

(d) High alloy steel plate: High alloy steel plate must comply with one of the following specifications:

Specifications	Minimum tensile strength (p.s.i.) welded condition [1]	Minimum elongation in 2 inches (percent) weld metal (longitudinal)
ASTM A 240, Type 304	75,000	30
ASTM A 240, Type 304L	70,000	30
ASTM A 240, Type 316	74,000	30
ASTM A 240, Type 316L	70,000	30

[1] Maximum stresses to be used in calculations.

(e) Manganese-molybdenum steel plate: Manganese-molybdenum steel plate must be suitable for fusion welding and must comply with the following specification:

Specifications	Minimum tensile strength (p.s.i.) welded condition [1]	Minimum elongation in 2 inches (percent) weld metal (longitudinal)
ASTM A 302, Gr. B	80,000	20

[1] Maximum stresses to be used in calculations.

(f) Plate materials used to fabricate the outer shell and heads must be those listed in paragraphs (b), (c), (d), or (e) of this section. The maximum allowable carbon content must be 0.31 percent when the individual specification allows carbon content greater than this amount. The plates may be clad with other approved materials.

(g) All appurtenances on the inner container in contact with the lading

must be made of approved material compatible with the plate material of the inner container. These appurtenances must not be subject to rapid deterioration by the lading, or must be coated or lined with suitable corrosion resistant material. See AAR Specifications for Tank Cars, appendix M, M4.05 for approved material specifications for castings for fittings.

[Amdt. 179–9, 36 FR 21340, Nov. 6, 1971, as amended by Amdt. 179–28, 46 FR 49906, Oct. 8, 1981; Amdt. 179–40, 52 FR 13048, Apr. 20, 1987; Amdt. 179–52, 61 FR 28681, June 5, 1996]

§ 179.220–8 Tank heads.

(a) Tank heads of the inner container, inner container compartments and outer shell must be of approved contour, and may be flanged and dished or ellipsoidal for pressure on concave side.

(b) Flanged and dished heads must have main inside radius not exceeding 10 feet and inside knuckle radius must be not less than 3¾ inches for steel and alloy steel tanks nor less than 5 inches for aluminum alloy tanks.

(c) Ellipsoidal heads must be an ellipsoid of revolution in which the major axis must equal the diameter of the shell and the minor axis must be one-half the major axis.

[Amdt. 179–9, 36 FR 21341, Nov. 6, 1971]

§ 179.220–9 Compartment tanks.

(a) The inner container may be divided into compartments by inserting interior heads, or by fabricating each compartment as a separate container and joining with a cylinder, or by fabricating each compartment as a separate tank without a joining cylinder. Each compartment must be capable of withstanding, without evidence of yielding or leakage, the required test pressure applied in each compartment separately, or in any combination of compartments.

(b) When the inner container is divided into compartments by fabricating each compartment as a separate container and joining with a cylinder, the cylinder must have a plate thickness not less than that required for the inner container shell and must be applied to the outside surface of the straight flange portion of the container head. The cylinder must fit the straight flange tightly for a distance of at least two times the plate thickness, or 1 inch, whichever is greater and must be joined to the straight flange by a full fillet weld. Distance from fillet weld seam to container head seam must be not less than 1½ inches or three times the plate thickness, whichever is greater.

[Amdt. 179–9, 36 FR 21341, Nov. 6, 1971]

§ 179.220–10 Welding.

(a) All joints must be fusion-welded in compliance with AAR Specifications for Tank Cars, appendix W. Welding procedures, welders, and fabricators shall be approved.

(b) Radioscopy of the outer shell is not a specification requirement.

(c) Welding is not permitted on or to ductile iron or malleable iron fittings.

[Amdt. 179–9, 36 FR 21341, Nov. 6, 1971]

§ 179.220–11 Postweld heat treatment.

(a) Postweld heat treatment of the inner container is not a specification requirement.

(b) Postweld heat treatment of the cylindrical portions of the outer shell to which the anchorage or draft sills are attached must comply with AAR Specifications for Tank Cars, appendix W.

(c) When cold formed heads are used on the outer shell they must be heat treated before welding to shell if postweld heat treatment is not practicable due to assembly procedures.

[Amdt. 179–9, 36 FR 21341, Nov. 6, 1971]

§ 179.220–13 Inner container manway nozzle and cover.

(a) Inner container manway nozzle must be of approved design with access opening at least 18 inches inside diameter, or at least 14 inches by 18 inches obround or oval.

(b) Manway covers must be of approved type. Design must provide a secure closure of the manway and must make it impossible to remove the cover while the tank interior is under pressure.

(c) All joints between manway covers and their seats must be made tight against leakage of vapor and liquid by use of suitable gaskets.

(d) Manway covers must be cast, forged, or fabricated metal complying with subsection §179.220–7(g) of this section.

(e) A seal must be provided between the inner container manway nozzle and the opening in the outer shell.

[Amdt. 179–9, 36 FR 21341, Nov. 6, 1971]

§179.220–14 Openings in the tanks.

Openings in the inner container and the outer shell must be reinforced in compliance with AAR Specifications for Tank Cars, appendix E. In determining the required reinforcement area for openings in the outer shell, *t* shall be one-fourth inch.

[Amdt. 179–9, 36 FR 21341, Nov. 6, 1971]

§179.220–15 Support system for inner container.

(a) The inner container must be supported within the outer shell by a support system of adequate strength and ductility at its operating temperature to support the inner container when filled with liquid lading to any level. The support system must be designed to support, without yielding, impact loads producing accelerations of the following magnitudes and directions when the inner container is loaded so that the car is at its rail load limit, and the car is equipped with a conventional AAR Specification M–901 draft gear.

Longitudinal	7G
Transverse	3G
Vertical	3G

(b) The longitudinal acceleration may be reduced to 3G where a cushioning device of approved design, which has been tested to demonstrate its ability to limit body forces to 400,000 pounds maximum at a 10 miles per hour impact, is used between the coupler and the tank structure. The support system must be of approved design and the inner container must be thermally isolated from the outer shell to the best practical extent. The inner container and outer shell must be permanently bonded to each other electrically either by the support system used, piping, or by a separate electrical connection of approved design.

[Amdt. 179–9, 36 FR 21341, Nov. 6, 1971, as amended by Amdt. 179–28, 46 FR 49906, Oct. 8, 1981]

§179.220–16 Expansion capacity.

Expansion capacity must be provided in the shell of the inner container as prescribed in §179.221–1.

[Amdt. 179–9, 36 FR 21341, Nov. 6, 1971]

§179.220–17 Gauging devices, top loading and unloading devices, venting and air inlet devices.

(a) When installed, each device must be of approved design which will prevent interchange with any other fixture and must be tightly closed. Each unloading pipe must be securely anchored within the inner container. Each inner container or compartment thereof may be equipped with one separate air connection.

(b) When the characteristics of the commodity for which the car is authorized require these devices to be equipped with valves or fittings to permit the loading and unloading of the contents, these devices including valves, shall be provided with a protective housing except when plug or ball-type valves with operating handles removed are used. Provision must be made for closing pipe connections of valves.

(c) Inner container may be equipped with a vacuum relief valve of approved design. Protective housing is not required.

(d) When a gauging device is required in §179.221–1, an outage scale visible through the manway opening must be provided. If loading devices are applied to permit tank loading with cover closed, a telltale pipe may be provided. The telltail pipe must be capable of determining that required outage is provided. The pipe must be equipped with ¼-inch maximum, NPT control valve mounted outside tank and enclosed within a protective housing. Other approved devices may be used in place of an outage scale or a telltale pipe.

(e) The bottom of the tank shell may be equipped with a sump or siphon bowl, or both, welded or pressed into the shell. These sumps or siphon bowls, if applied, are not limited in size and

must be made of cast, forged, or fabricated metal. Each sump or siphon bowl must be of good welding quality in conjunction with the metal of the tank shell. When the sump or siphon bowl is pressed in the bottom of the tank shell, the wall thickness of the pressed section must not be less than that specified for the shell. The section of a circular cross section tank to which a sump or siphon bowl is attached need not comply with the out-of-roundness requirement specified in appendix W, W14.06 of the AAR Specifications for Tank Cars. Any portion of a sump or siphon bowl not forming a part of a cylinder of revolution must have walls of such thickness and must be so reinforced that the stresses in the walls caused by a given internal pressure are not greater than the circumferential stress which would exist under the same internal pressure in the wall of a tank of circular cross section designed in accordance with §§ 179.220–6(a) and 179.220–9. In no case shall the wall thickness be less than that specified in § 179.221–1(a).

(f) Protective housing, when required, must be of approved material and must have cover and sidewalls not less than 0.119 inch in thickness.

[Amdt. 179–9, 36 FR 21341, Nov. 6, 1971]

§ 179.220–18 Bottom outlets.

(a) The inner container may be equipped with a bottom outlet of approved design and an opening provided in the outer shell of its access. If applied, the bottom outlet must comply with the following requirements:

(1) The extreme projection of the bottom outlet equipment may not be more than that allowed by appendix E of the AAR Specifications for Tank Cars. All bottom outlet reducers and closures and their attachments shall be secured to car by at at least ⅜-inch chain, or its equivalent, except that bottom outlet closure plugs may be attached by ¼-inch chain. When the bottom outlet closure is of the combination cap and valve type, the pipe connection to the valve shall be closed by a plug, or cap. The bottom outlet equipment should include only the valve, reducers and closures that are necessary for the attachment of unloading fixtures. The permanent attachment of supplementary exterior fittings shall be approved by the AAR Committee on Tank Cars.

(2) Each bottom outlet must be provided with a liquid tight closure at its lower end.

(3) The valve and its operating mechanism must be applied to the outside bottom of the inner container. The valve operating mechanism must be provided with a suitable locking arrangement to insure positive closure during transportation.

(4) Valve outlet nozzle and valve body must be of cast, fabricated or forged metal. If welded to inner container, they must be of good weldable quality in conjunction with metal of tank.

(5) To provide for the attachment of unloading connections, the bottom of the main portion of the outlet nozzle or valve body, or some fixed attachment thereto, must be provided with threaded cap closure arrangement or bolted flange closure arrangement having minimum 1-inch threaded pipe plug.

(6) If outlet nozzle and its closure extends below the bottom of the outer shell, a V-shaped breakage groove shall be cut (not cast) in the upper part of the outlet nozzle at a point immediately below the lowest part of the valve closest to the tank. In no case may the nozzle wall thickness at the root of the ''V'' be more than ¼-inch. The outlet nozzle or the valve body may be steam jacketed, in which case the breakage groove or its equivalent must be below the steam chamber but above the bottom of the center sill construction. If the outlet nozzle is not a single piece or its exterior valves are applied, provision shall be made for the equivalent of the breakage groove. On cars without continuous center sills, the breakage groove or its equivalent may not be more than 15 inches below the outer shell. On cars with continuous center sills, the breakage groove or its equivalent must be above the bottom of the center sill construction.

(7) The valve body must be of a thickness which will prevent distortion of the valve seat or valve by any change in contour of the shell resulting from expansion of lading, or other causes, and which will insure that accidental breakage of the outlet nozzle will occur

at or below the ''V'' groove, or its equivalent.

(8) The valve must have no wings or stem projection below the ''V'' groove or its equivalent. The valve and seat must be readily accessible or removable for repairs, including grinding.

(b) Inner container may be equipped with bottom washout of approved design. If applied, bottom washout must comply with the following requirements:

(1) The extreme projection of the bottom washout equipment may not be more than that allowed by appendix E of the AAR Specifications for Tank Cars.

(2) Bottom washout must be of cast, forged or fabricated metals. If it is welded to the inner container, it must be of good weldable quality in conjunction with metal of tank.

(3) If washout nozzle extends below the bottom of the outer shell, a V-shaped breakage groove shall be cut (not cast) in the upper part of the nozzle at a point immediately below the lowest part of the inside closure seat or plug. In no case may the nozzle wall thickness at the root of the ''V'' be more than ¼-inch. Where the nozzle is not a single piece, provisions shall be made for the equivalent of the breakage groove. The nozzle must be of a thickness to insure that accidental breakage will occur at or below the ''V'' groove or its equivalent. On cars without a continuous center sill, the breakage groove or its equivalent may not be more than 15 inches below the outer shell. On cars with continuous center sills, the breakage groove or its equivalent must be above the bottom of the center sill construction.

(4) The closure plug and seat must be readily accessible or removable for repairs.

(5) The closure of the washout nozzle must be equipped with a ¾-inch solid screw plug. Plug must be attached by at least a ¼-inch chain.

(6) Joints between closures and their seats may be gasketed with suitable material.

[Amdt. 179–9, 36 FR 21342, Nov. 6, 1971, as amended by Amdt. 179–40, 52 FR 13048, Apr. 20, 1987]

§179.220–20 Reinforcements, when used, and appurtenances not otherwise specified.

All attachments to inner container and outer shell must be applied by approved means.

[Amdt. 179–9, 36 FR 21342, Nov. 6, 1971]

§179.220–22 Closure for openings.

(a) All plugs must be solid, with NPT threads, and must be of a length which will screw at least six threads inside the face of fitting or tank. Plugs, when inserted from the outside of the outer shell tank heads, must have the letter ''S'' at least three-eighths inch in size stamped with steel stamp or cast on the outside surface to indicate the plug is solid.

(b) Openings in the outer shell used during construction for installation must be closed in an approved manner.

[Amdt. 179–9, 36 FR 21343, Nov. 6, 1971]

§179.220–23 Test of tanks.

(a) Each inner container or compartment must be tested hydrostatically to the pressure specified in §179.221–1. The temperature of the pressurizing medium must not exceed 100° F. during the test. The container must hold the prescribed pressure for at least 10 minutes without leakage or evidence of distress. Safety relief devices must not be in place when the test is made.

(b) The inner container must be pressure tested before installation within the outer shell. Items which, because of assembly sequence, must be welded to inner container after its installation within outer shell must have their attachment welds thoroughly inspected by a nondestructive dye penetrant method or its equivalent.

(c) Pressure testing of outer shell is not a specification requirement.

[Amdt. 179–9, 36 FR 21343, Nov. 6, 1971]

§179.220–24 Tests of safety relief valves.

Each safety relief valve must be tested by air or gas for compliance with §179.15 before being put into service.

[Amdt. 179–9, 36 FR 21343, Nov. 6, 1971, as amended at 62 FR 51561, Oct. 1, 1997]

§ 179.220–25 Stamping.

To certify that the tank complies with all specification requirements, each outer shell must be plainly and permanently stamped in letters and figures at least ⅜-inch high into the metal near the center of both outside heads as follows:

	Examples of required stamping
Specifications	DOT–115A60W6.
Inner container:	
Material	ASTM A240–316L.
Shell thickness	Shell 0.167 in.
Head thickness	Head 0.150 in.
Tank builders initials	ABC.
Date of original test	00–0000.
Outer shell:	
Material	ASTM A285–C.
Tank builders initials	WYZ.
Car assembler (if other than inner container or outer shell builders).	DEF.

[Amdt. 179–9, 36 FR 21343, Nov. 6, 1971]

§ 179.220–26 Stenciling.

(a) The outer shell, or the jacket if the outer shell is insulated, must be stenciled in compliance with AAR Specifications for Tank Cars, appendix C.

(b) Stenciling must be applied on both sides of the outer shell or jacket near the center in letters and figures at least 1½ inches high to indicate the safe upper temperature limit, if applicable, for the inner tank, insulation, and the support system.

[Amdt. 179–9, 36 FR 21343, Nov. 6, 1971]

§ 179.221 Individual specification requirements applicable to tank car tanks consisting of an inner container supported within an outer shell.

§ 179.221–1 Individual specification requirements.

In addition to § 179.220, the individual specification requirements are as follows:

DOT specification	Insulation	Bursting pressure (psi)	Minimum plate thickness (inches)	Test pressure (psi)	Bottom outlet	Bottom washout	Reference (179.221–***)
115A60ALW	Yes	240	3/16	60	Optional.	Optional	
115A60W1	Yes	240	1/8	60	Optional	Optional	1
115A60W6	Yes	240	1/8	60	Optional	Optional	1

[Amdt. 170–52, 61 FR 28681, June 5, 1996, as amended at 62 FR 51561, Oct. 1, 1997]

Subpart E—Specifications for Multi-Unit Tank Car Tanks (Classes DOT–106A and 110AW)

§ 179.300 General specifications applicable to multi-unit tank car tanks designed to be removed from car structure for filling and emptying (Classes DOT–106A and 110AW).

§ 179.300–1 Tanks built under these specifications shall meet the requirements of § 179.300, § 179.301 and when applicable, § 179.302.

§ 179.300–3 Type and general requirements.

(a) Tanks built under this specification shall be cylindrical, circular in cross section, and shall have heads of approved design. All openings shall be located in the heads.

(b) Each tank shall have a water capacity of at least 1500 pounds and not more than 2600 pounds.

(c) For tanks made in foreign countries, a chemical analysis of materials and all tests as specified shall be carried out within the limits of the United States under the supervision of a competent and impartial inspector.

§ 179.300–4 Insulation.

(a) Tanks shall not be insulated.

(b) [Reserved]

§ 179.300–6 Thickness of plates.

(a) For class DOT–110A tanks, the wall thickness after forming of the cylindrical portion of the tank must not be less than that specified in § 179.301 nor that calculated by the following formula:

$$t = \frac{Pd}{2SE}$$

where:

d=inside diameter in inches;
E=1.0 welded joint efficiency;
P=minimum required bursting pressure in p.s.i.;
S=minimum tensile strength of plate material in p.s.i. as prescribed § 179.300–7;
t=minimum thickness of plate material in inches after forming.

(b) For class DOT–106A tanks, the wall thickness of the cylindrical portion of the tank shall not be less than that specified in § 179.301 and shall be such that at the tank test pressure the maximum fiber stress in the wall of the tank will not exceed 15,750 p.s.i. as calculated by the following formula:

$$s=[p(1.3D^2+0.4d^2)]/(D^2-d^2)$$

where:

d=inside diameter in inches;
D=outside diameter in inches;
p=tank test pressure in p.s.i.;
s=wall stress in p.s.i.

(c) If plates are clad with material having tensile strength at least equal to the base plate, the cladding may be considered a part of the base plate when determining the thickness. If cladding material does not have tensile strength at least equal to the base plate, the base plate alone shall meet the thickness requirements.

[29 FR 18995, Dec. 29, 1964, as amended by Order 71, 31 FR 9083, July 1, 1966. Redesignated at 32 FR 5606, Apr. 5, 1967]

EDITORIAL NOTE: For FEDERAL REGISTER citations to § 179.300–6, see the List of CFR Sections Affected in the Finding Aids section of this volume.

§ 179.300–7 Materials.

(a) Steel plate material used to fabricate tanks must conform with the following specifications with the indicated minimum tensile strength and elongation in the welded condition. However, the maximum allowable carbon content for carbon steel must not exceed 0.31 percent, although the individual ASTM specification may allow for a greater amount of carbon. The plates may be clad with other approved materials:

Specifications	Tensile strength (psi) welded condition [1] (minimum)	Elongation in 2 inches (percent) welded condition [1] (longitudinal) (minimum)
ASTM A 240 type 304	75,000	25
ASTM A 240 type 304L	70,000	25
ASTM A 240 type 316	75,000	25
ASTM A 240 type 316L	70,000	25
ASTM A 240 type 321	75,000	25
ASTM A285 Gr. A	45,000	29
ASTM A285 Gr. B	50,000	20
ASTM A285 Gr. C	55,000	20
ASTM A515 Gr. 65	65,000	20
ASTM A515 Gr. 70	70,000	20
ASTM A516 Gr. 70	70,000	20

[1] Maximum stresses to be used in calculations.

(b) [Reserved]

(c) All plates must have their heat number and the name or brand of the manufacturer legibly stamped on them at the rolling mill.

[Amdt. 179–10, 36 FR 21355, Nov. 6, 1971, as amended by Amdt. 179–42, 54 FR 38798, Sept. 20, 1989; Amdt. 179–43, 55 FR 27642, July 5, 1990; Amdt. 179–52, 61 FR 28682, June 5, 1996; Amdt. 179–52, 61 FR 50255, Sept. 25, 1996; Amdt. 179–53, 61 FR 51342, Oct. 1, 1996]

§179.300–8 Tank heads.

(a) Class DOT–110A tanks shall have fusion-welded heads formed concave to pressure. Heads for fusion welding shall be an ellipsoid of revolution 2:1 ratio of major to minor axis. They shall be one piece, hot formed in one heat so as to provide a straight flange at least 1½ inches long. The thickness shall not be less than that calculated by the following formula:

$$t = \frac{Pd}{2SE}$$

where symbols are as defined in §179.300–6(a).

(b) Class DOT–106A tanks must have forged-welded heads, formed convex to pressure. Heads for forge welding must be torispherical with an inside radius not greater than the inside diameter of the shell. They must be one piece, hot formed in one heat so as to provide a straight flange at least 4 inches long. They must have snug drive fit into the shell for forge welding. The wall thickness after forming must be sufficient to meet the test requirements of §179.300–16 and to provide for adequate threading of openings.

[29 FR 18995, Dec. 29, 1964. Redesignated at 32 FR 5606, Apr. 5, 1967, and amended by Amdt. 179–10, 36 FR 21355, Nov. 6, 1971]

§179.300–9 Welding.

(a) Longitudinal joints must be fusion welded. Head-to-shell joints must be forge welded on class DOT–106A tanks and fusion welded on class DOT–110A tanks. Welding procedures, welders and fabricators must be approved in accordance with AAR Specifications for Tank Cars, appendix W.

(b) Fusion-welded joints must be in compliance with the requirements of AAR Specifications for Tank Cars, appendix W, except that circumferential welds in tanks less than 36 inches inside diameter need not be radiotaped.

(c) Forge-welded joints shall be thoroughly hammered or rolled to insure sound welds. The flanges of the heads shall be forge lapwelded to the shell and then crimped inwardly toward the center line at least one inch on the radius. Welding and crimping must be accomplished in one heat.

[29 FR 18995, Dec. 29, 1964. Redesignated at 32 FR 5606, Apr. 5, 1967, and as amended by Amdt. 179–10, 36 FR 21355, Nov. 6, 1971]

§179.300–10 Postweld heat treatment.

After welding is complete, steel tanks and all attachments welded thereto, must be postweld heat treated as a unit in compliance with the requirements of AAR Specifications for Tank Cars, appendix W.

[Amdt. 179–10, 36 FR 21355, Nov. 6, 1971]

§179.300–12 Protection of fittings.

(a) Tanks shall be of such design as will afford maximum protection to any fittings or attachment to the head including the housing referred to in §179.300–12(b). Tank ends shall slope or curve inward toward the axis so that the diameter at each end is at least 2 inches less than the maximum diameter.

(b) Loading and unloading valves shall be protected by a detachable protective housing of approved design which shall not project beyond the end of the tank and shall be securely fastened to the tank head. Safety relief devices shall not be covered by the housing.

§179.300–13 Venting, loading and unloading valves.

(a) Valves shall be of approved type, made of metal not subject to rapid deterioration by lading, and shall withstand tank test pressure without leakage. The valves shall be screwed directly into or attached by other approved methods to one tank head. Provision shall be made for closing outlet connections of the valves.

(b) Threads for openings shall be National Gas Taper Threads (NGT) tapped to gage, clean cut, even and without checks.

§ 179.300–14 Attachments not otherwise specified.

Siphon pipes and their couplings on the inside of the tank head and lugs on the outside of the tank head for attaching the valve protective housing must be fusion-welded in place prior to postweld heat treatment. All other fixtures and appurtenances, except as specifically provided for, are prohibited.

[Amdt. 179–10, 36 FR 21355, Nov. 6, 1971]

§ 179.300–15 Safety relief devices.

(a) Unless prohibited in § 179.302, or in part 173 of this chapter, tanks shall be equipped with one or more safety relief devices of approved type, made of metal not subject to rapid deterioration by the lading and screwed directly into tank heads or attached to tank heads by other approved methods. The total discharge capacity shall be sufficient to prevent building up pressure in tank in excess of 82.5 percent of the tank test pressure. When safety relief devices of the fusible plug type are used, the required discharge capacity shall be available in each head. See AAR Specifications for Tank Cars, appendix A, for formula for calculating discharge capacity.

(b) Threads for openings shall be National Gas Taper Threads (NGT) tapped to gage, clean cut, even and without checks.

(c) Safety relief valves shall be set for start-to-discharge and frangible discs shall burst at a pressure not exceeding that specified in § 179.301.

(d) Fusible plugs shall function at a temperature not exceeding 175° F. and shall be vapor-tight at a temperature of not less than 130° F.

§ 179.300–16 Tests of tanks.

(a) After postweld heat treatment, tanks shall be subjected to hydrostatic expansion test in a water jacket, or by other approved methods. No tank shall have been subjected previously to internal pressure within 100 pounds of the test pressure. Each tank shall be tested to the pressure prescribed in § 179.301. Pressure shall be maintained for 30 seconds and sufficiently longer to insure complete expansion of tank. Pressure gage shall permit reading to accuracy of one percent. Expansion gage shall permit reading of total expansion to accuracy of one percent. Expansion shall be recorded in cubic centimeters.

(1) No leaks shall appear and permanent volumetric expansion shall not exceed 10 percent of total volumetric expansion at test pressure.

(2) [Reserved]

(b) After all fittings have been installed, each tank shall be subjected to interior air pressure test of at least 100 p.s.i. under conditions favorable to detection of any leakage. No leaks shall appear.

(c) Repairs of leaks detected in manufacture or in foregoing tests shall be made by the same process as employed in manufacture of tank. Caulking, soldering, or similar repairing is prohibited.

[29 FR 18995, Dec. 29, 1964. Redesignated at 32 FR 5606, Apr. 5, 1967, and amended by Amdt. 179–10, 36 FR 21355, Nov. 6, 1971]

§ 179.300–17 Tests of safety relief devices.

(a) Each valve shall be tested by air or gas before being put into service. The valve shall open and be vapor-tight at the pressure prescribed in § 179.301.

(b) Frangible discs of safety vents must be tested as prescribed in AAR Specifications for Tank Cars, appendix A, A5.03.

(c) For safety relief devices of the fusible plug type, a sample of the plug used shall function at the temperatures prescribed in § 179.300–15.

(d) The start-to-discharge and vapor-tight pressures shall not be affected by any auxiliary closure or other combination.

[29 FR 18995, Dec. 29, 1964. Redesignated at 32 FR 5606, Apr. 5, 1967, and amended by Amdt. 179–10, 36 FR 21355, Nov. 6, 1971]

§ 179.300–18 Stamping.

(a) To certify that the tank complies with all specification requirements, each tank shall be plainly and permanently stamped in letters and figures ⅜ inch high into the metal of valve end chime as follows:

(1) DOT Specification number.

(2) Material and cladding material if any (immediately below the specification number).

(3) Owner's or builder's identifying symbol and serial number (immediately below the material identification). The symbol shall be registered with the Bureau of Explosives, duplications are not authorized.

(4) Inspector's official mark (immediately below the owner's or builder's symbol).

(5) Date of original tank test (month and year, such as 1–64 for January 1964). This should be so placed that dates of subsequent tests may easily be added thereto.

(6) Water capacity—0000 pounds.

(b) A copy of the above stamping in letters and figures of the prescribed size stamped on a brass plate secured to one of the tank heads is authorized.

§179.300–19 Inspection.

(a) Tank shall be inspected within the United States and Canada by a competent and impartial inspector acceptable to the Bureau of Explosives. For tanks made outside the United States and Canada, the specified inspection shall be made within the United States.

(b) The inspector shall carefully inspect all plates from which tanks are to be made and secure records certifying that plates comply with the specification. Plates which do not comply with §179.300–7 shall be rejected.

(c) The inspector shall make such inspection as may be necessary to see that all the requirements of this specification, including markings, are fully complied with; shall see that the finished tanks are properly stress relieved and tested.

(d) The inspector shall stamp his official mark on each accepted tank as required in §179.300–18, and render the report required in §179.300–20.

§179.300–20 Reports.

(a) Before a tank is placed in service, the inspector shall furnish to the builder, tank owner, Bureau of Explosives and the Secretary, Mechanical Division, Association of American Railroads, a report in approved form certifying that the tank and its equipment comply with all the requirements of this specification.

(b) For builder's Certificate of Construction, see §179.5 (b), (c), and (d).

[29 FR 18995, Dec. 29, 1964. Redesignated at 32 FR 5606, Apr. 5, 1967, and amended by Amdt. 179–10, 36 FR 21355, Nov. 5, 1971]

§179.301 Individual specification requirements for multi-unit tank car tanks.

(a) In addition to §179.300 the individual specification requirements are as follows:

DOT specification	106A500–X	106A800–X	110A500–W	110A600–W	110A800–W	110A1000–W
Bursting pressure, p.s.i. (see §179.300–5)	(1	(1	1250	1500	2000	2500
Minimum thickness shell, inches	13/32	11/16	11/32	3/8	15/32	19/32
Test pressure, p.s.i. (see §179.300–16)	500	800	500	600	800	1000
Safety relief devices, p.s.i. (see §179.300–15)	.....	.....	.....	.....	.....	.....
Start-to-discharge, or burst maximum, p.s.i.	375	600	375	450	600	700
Vapor-tight, minimum p.s.i	300	480	300	360	480	650

[1] None specified.

(b) [Reserved]

[29 FR 18995, Dec. 29, 1964. Redesignated at 32 FR 5606, Apr. 5, 1967, and amended by Amdt. 179–10, 36 FR 21355, Nov. 6, 1971; Amdt. 179–40, 52 FR 13049, Apr. 20, 1987]

§179.302 [Reserved]

Subpart F—Specification for Cryogenic Liquid Tank Car Tanks and Seamless Steel Tanks (Classes DOT–113 and 107A)

SOURCE: Sections 179.400 through 179.401–1 appear at 48 FR 27708, June 16, 1983 (Amdt. 179–32), unless otherwise noted.

Sections 179.500 through 179.500–18 appear at 29 FR 18995, Dec. 29, 1964, unless otherwise noted. Redesignated at 32 FR 5606, Apr. 5, 1967.

§ 179.400 General specification applicable to cryogenic liquid tank car tanks.

§ 179.400–1 General.

A tank built to this specification must comply with §§ 179.400 and 179.401.

§ 179.400–3 Type.

(a) A tank built to this specification must—

(1) Consist of an inner tank of circular cross section supported essentially concentric within an outer jacket of circular cross section, with the out of roundness of both the inner tank and outer jacket limited in accordance with Section VIII, Division I, Paragraph UG–80 of the ASME Code;

(2) Have the annular space evacuated after filling the annular space with an approved insulating material;

(3) Have the inner tank heads designed concave to pressure; and

(4) Have the outer jacket heads designed convex to pressure.

(b) The tank must be equipped with piping systems for vapor venting and transfer of lading, and with pressure relief devices, controls, gages and valves, as prescribed herein.

§ 179.400–4 Insulation system and performance standard.

(a) For the purposes of this specification—

(1) *Standard Heat Transfer Rate* (SHTR), expressed in Btu/day/lb of water capacity, means the rate of heat transfer used for determining the satisfactory performance of the insulation system of a cryogenic tank car tank in cryogenic liquid service (see § 179.401–1 Table).

(2) *Test cryogenic liquid* means the cryogenic liquid, which may be different from the lading intended to be shipped in the tank, being used during the performance tests of the insulation system.

(3) *Normal evaporation rate* (NER), expressed in lbs. (of the cryogenic liquid)/day, means the rate of evaporation, determined by test of a test cryogenic liquid in a tank maintained at a pressure of approximately one atmosphere, absolute. This determination of the NER is the NER test.

(4) *Stabilization period* means the elapsed time after a tank car tank is filled with the test cryogenic liquid until the NER has stabilized, or 24 hours has passed, whichever is greater.

(5) *Calculated heat transfer rate.* The calculated heat transfer rate (CHTR) is determined by the use of test data obtained during the NER test in the formula:

$$q=[N(\Delta h)(90-t_l)]/[V(8.32828)(t_s-t_f)]$$

Where:

q=CHTR, in Btu/day/lb., of water capacity;

N=NER, determined by NER test, in lbs./day;

Δh = latent heat of vaporization of the test cryogenic liquid at the NER test pressure of approximately one atmosphere, absolute, in Btu/lb.;

90 = ambient temperature at 90° F.

V = gross water volume at 60° F. of the inner tank, in gallons;

t_l = equilibrium temperature of intended lading at maximum shipping pressure, in ° F.;

8.32828 = constant for converting gallons of water at 60° F. to lbs. of water at 60° F., in lbs./gallon;

t_s = average temperature of outer jacket, determined by averaging jacket temperatures at various locations on the jacket at regular intervals during the NER test, in ° F.;

t_f = equilibrium temperature of the test cryogenic liquid at the NER test pressure of approximately, one atmosphere, absolute, in ° F.

(b) DOT–113A60W tank cars must—

(1) Be filled with hydrogen, cryogenic liquid to the maximum permitted fill density specified in § 173.319(d)(2) Table of this subchapter prior to performing the NER test; and

(2) Have a CHTR equal to or less than the SHTR specified in § 179.401–1 table for a DOT–113A60W tank car.

(c) DOT–113C120W tank cars must—

(1) Be filled with ethylene, cryogenic liquid to the maximum permitted fill density specified in § 173.319(d)(2) Table of this subchapter prior to performing the NER test, or be filled with nitrogen, cryogenic liquid to 90 percent of the volumetric capacity of the inner tank prior to performing the NER test; and

(2) Have a CHTR equal to or less than 75 percent of the SHTR specified in

§179.401–1 Table for a DOT–113C120W tank car.

(d) Insulating materials must be approved.

(e) If the insulation consists of a powder having a tendency to settle, the entire top of the cylindrical portion of the inner tank must be insulated with a layer of glass fiber insulation at least one-inch nominal thickness, or equivalent, suitably held in position and covering an area extending 25 degrees to each side of the top center line of the inner tank.

(f) The outer jacket must be provided with fittings to permit effective evacuation of the annular space between the outer jacket and the inner tank.

(g) A device to measure the absolute pressure in the annular space must be provided. The device must be portable with an easily accessible connection or permanently positioned where it is readily visible to the operator.

[Amdt. 179–32, 48 FR 27708, June 16, 1983, as amended at 49 FR 24318, June 12, 1984]

§179.400–5 Materials.

(a) Stainless steel of ASTM Specification A240, Type 304 or 304L must be used for the inner tank and its appurtenances, as specified in AAR Specifications for Tank Cars, appendix M, and must be—

(1) In the annealed condition prior to fabrication, forming and fusion welding;

(2) Suitable for use at the temperature of the lading; and

(3) Compatible with the lading.

(b) Any steel casting, steel forging, steel structural shape or carbon steel plate used to fabricate the outer jacket or heads must be as specified in AAR Specifications for Tank Cars, appendix M.

(c) *Impact tests* must be—

(1) Conducted in accordance with AAR Specifications for Tank Cars, appendix W, W9.01;

(2) Performed on longitudinal specimens of the material;

(3) Conducted at the tank design service temperature or colder; and

(4) Performed on test plate welds and materials used for inner tanks and appurtenances and which will be subjected to cryogenic temperatures.

(d) Impact test values must be equal to or greater than those specified in AAR Specifications for Tank Cars, appendix W. The report of impact tests must include the test values and lateral expansion data.

§179.400–6 Bursting and buckling pressure.

(a) [Reserved]

(b) The outer jacket of the required evacuated insulation system must be designed in accordance with §179.400–7(d) and in addition must comply with the design loads specified in Section 6.2 of the AAR Specifications for Tank Cars. The designs and calculations must provide for the loadings transferred to the outer jacket through the support system.

[Amdt. 179–32, 48 FR 27708, June 16, 1983, as amended by Amdt. 179–51, 61 FR 18934, Apr. 29, 1996]

§179.400–7 Tank heads.

(a) Tank heads of the inner tank and outer jacket must be flanged and dished, or ellipsoidal.

(b) Flanged and dished heads must have—

(1) A main inside dish radius not greater than the outside diameter of the straight flange;

(2) An inside knuckle radius of not less than 6 percent of the outside diameter of the straight flange; and

(3) An inside knuckle radius of at least three times the head thickness.

§179.400–8 Thickness of plates.

(a) The minimum wall thickness, after forming, of the inner shell and any 2:1 ellipsoidal head for the inner tank must be that specified in §179.401–1, or that calculated by the following formula, whichever is greater:

$$t=Pd/2SE$$

Where:

t=minimum thickness of plate, after forming, in inches;

P=minimum required bursting pressure, in psi;

d=inside diameter, in inches;

S=minimum tensile strength of the plate material, as prescribed in AAR Specifications for Tank Cars, appendix M, Table M1, in psi;

E=0.9, a factor representing the efficiency of welded joints, except that for seamless heads, E=1.0.

(b) The minimum wall thickness, after forming, of any 3:1 ellipsoidal head for the inner tank must be that specified in § 179.401–1, or that calculated by the following formula, whichever is greater:

$$t=1.83\ Pd/2SE$$

Where:

t=minimum thickness of plate, after forming, in inches;
P=minimum required bursting pressure, in psi;
d=inside diameter, in inches;
S=minimum tensile strength of the plate material, as prescribed in AAR Specifications for Tank Cars, appendix M, Table M1, in psi;
E=0.9, a factor representing the efficiency of welded joints, except that for seamless heads, E=1.0.

(c) The minimum wall thickness, after forming, of a flanged and dished head for the inner tank must be that specified in § 179.401–1, or that calculated by the following formula, whichever is greater:

$$t=[PL(3+\sqrt{(L/r)})]/(8SE)$$

Where:

t=minimum thickness of plate, after forming, in inches;
P=minimum required bursting pressure, in psi;
L=main inside radius of dished head, in inches;
r=inside knuckle radius, in inches;
S=minimum tensile strength of plate material, as prescribed in AAR Specifications for Tank Cars, appendix M, Table M1, in psi;
E=0.9, a factor representing the efficiency of welded joints, except that for seamless heads, E=1.0.

(d) The minimum wall thickness, after forming, of the outer jacket shell may not be less than 7/16 inch. The minimum wall thickness, after forming, of the outer jacket heads may not be less than ½ inch and they must be made from steel specified in § 179.100–23(a)(1). The annular space is to be evacuated, and the cylindrical portion of the outer jacket between heads, or between stiffening rings if used, must be designed to withstand an external pressure of 37.5 psi (critical collapsing pressure), as determined by the following formula:

$$P_c=[2.6E(t/D)^{2.5}]/[(L/D)-0.45(t/D)^{0.5}]$$

Where:

P_c=Critical collapsing pressure (37.5 psi minimum), in psi;
E=modulus of elasticity of jacket material, in psi;
t=minimum thickness of jacket material, after forming, in inches;
D=outside diameter of jacket, in inches;
L=distance between stiffening ring centers in inches. (The heads may be considered as stiffening rings located ⅓ of the head depth from the head tangent line.)

[Amdt. 179–32, 48 FR 27708, June 16, 1983; 49 FR 42736, Oct. 24, 1984]

§ 179.400–9 Stiffening rings.

(a) If stiffening rings are used in designing the cylindrical portion of the outer jacket for external pressure, they must be attached to the jacket by means of fillet welds. Outside stiffening ring attachment welds must be continuous on each side of the ring. Inside stiffening ring attachment welds may be intermittent welds on each side of the ring with the total length of weld on each side not less than one-third of the circumference of the tank. The maximum space between welds may not exceed eight times the outer jacket wall thickness.

(b) A portion of the outer jacket may be included when calculating the moment of inertia of the ring. The effective width of jacket plate on each side of the attachment of the stiffening ring is given by the following formula:

$$W=0.78(Rt)^{0.5}$$

Where:

W=width of jacket effective on each side of the stiffening ring, in inches;
R=outside radius of the outer jacket, in inches;
t=plate thickness of the outer jacket, after forming, in inches.

(c) Where a stiffening ring is used that consists of a closed section having two webs attached to the outer jacket, the jacket plate between the webs may be included up to the limit of twice the value of ''W'', as defined in paragraph (b) of this section. The outer flange of the closed section, if not a steel structural shape, is subject to the same limitations with ''W'' based on the ''R'' and ''t'' values of the flange. Where two separate members such as two angles, are located less than ''2W'' apart they may be treated as a single stiffening ring member. (The maximum length of

plate which may be considered effective is 4W.) The closed section between an external ring and the outer jacket must be provided with a drain opening.

(d) The stiffening ring must have a moment of inertia large enough to support the critical collapsing pressure, as determined by either of the following formulas:

$I=[0.035D^3 L P_c]/E$, or

$I'=[0.046D^3 L P_c]/E$

Where:

I=required moment of inertia of stiffening ring about the centroidal axis parallel to the vessel axis, in inches to the fourth power;

I′=required moment of inertia of combined section of stiffening ring and effective width of jacket plate about the centroidal axis parallel to the vessel axis, in inches to the fourth power;

D=outside diameter of the outer jacket, in inches;

L=one-half of the distance from the centerline of the stiffening ring to the next line of support on one side, plus one-half of the distance from the centerline to the next line of support on the other side of stiffening ring. Both distances are measured parallel to the axis of the vessel, in inches. (A line of support is:

(1) A stiffening ring which meets the requirements of this paragraph, or

(2) A circumferential line of a head at one-third the depth of the head from the tangent line);

P_c=critical collapsing pressure (37.5 psi minimum), in psi;

E=modulus of elasticity of stiffening ring material, in psi.

(e) Where loads are applied to the outer jacket or to stiffening rings from the system used to support the inner tank within the outer jacket, additional stiffening rings, or an increased moment of inertia of the stiffening rings designed for the external pressure, must be provided to carry the support loads.

§179.400–10 Sump or siphon bowl.

A sump or siphon bowl may be in the bottom of the inner tank shell if—

(a) It is formed directly into the inner tank shell, or is formed and welded to the inner tank shell and is of weldable quality metal that is compatible with the inner tank shell;

(b) The stress in any orientation under any condition does not exceed the circumferential stress in the inner tank shell; and

(c) The wall thickness is not less than that specified in §179.401–1.

§179.400–11 Welding.

(a) Except for closure of openings and a maximum of two circumferential closing joints in the cylindrical portion of the outer jacket, each joint of an inner tank and the outer jacket must be a fusion double welded butt joint.

(b) The closure for openings and the circumferential closing joints in the cylindrical portion of the outer jacket, including head to shell joints, may be a single welded butt joint using a backing strip on the inside of the joint.

(c) Each joint must be welded in accordance with the requirements of AAR Specifications for Tank Cars, appendix W.

(d) Each welding procedure, welder, and fabricator must be approved.

§179.400–12 Postweld heat treatment.

(a) Postweld heat treatment of the inner tank is not required.

(b) The cylindrical portion of the outer jacket, with the exception of the circumferential closing seams, must be postweld heat treated as prescribed in AAR Specifications for Tank Cars, appendix W. Any item to be welded to this portion of the outer jacket must be attached before postweld heat treatment. Welds securing the following need not be postweld heat treated when it is not practical due to final assembly procedures:

(1) the inner tank support system to the outer jacket,

(2) connections at piping penetrations,

(3) closures for access openings, and

(4) circumferential closing joints of head to shell joints.

(c) When cold formed heads are used on the outer jacket they must be heat treated before welding to the jacket shell if postweld heat treatment is not practical due to assembly procedures.

§179.400–13 Support system for inner tank.

(a) The inner tank must be supported within the outer jacket by a support system of approved design. The system and its areas of attachment to the

outer jacket must have adequate strength and ductility at operating temperatures to support the inner tank when filled with the lading to any level incident to transportation.

(b) The support system must be designed to support, without yielding, impact loads producing accelerations of the following magnitudes and directions when the inner tank is fully loaded and the car is equipped with a conventional draft gear:

Longitudinal	7''g''
Transverse	3''g''
Vertical	3''g''

The longitudinal acceleration may be reduced to 3''g'' where a cushioning device of approved design, which has been tested to demonstrate its ability to limit body forces to 400,000 pounds maximum at 10 miles per hour, is used between the coupler and the tank structure.

(c) The inner tank and outer jacket must be permanently bonded to each other electrically, by either the support system, piping, or a separate electrical connection of approved design.

§ 179.400–14 Cleaning of inner tank.

The interior of the inner tank and all connecting lines must be thoroughly cleaned and dried prior to use. Proper precautions must be taken to avoid contamination of the system after cleaning.

§ 179.400–15 Radioscopy.

Each longitudinal and circumferential joint of the inner tank, and each longitudinal and circumferential double welded butt joint of the outer jacket, must be examined along its entire length in accordance with the requirements of AAR Specifications for Tank Cars, appendix W.

§ 179.400–16 Access to inner tank.

(a) The inner tank must be provided with a means of access having a minimum inside diameter of 16 inches. Reinforcement of the access opening must be made of the same material used in the inner tank. The access closure must be of an approved material and design.

(b) If a welded closure is used, it must be designed to allow it to be reopened by grinding or chipping and to be closed again by rewelding, preferably without a need for new parts. A cutting torch may not be used.

§ 179.400–17 Inner tank piping.

(a) *Product lines.* The piping system for vapor and liquid phase transfer and venting must be made for material compatible with the product and having satisfactory properties at the lading temperature. The outlets of all vapor phase and liquid phase lines must be located so that accidental discharge from these lines will not impinge on any metal of the outer jacket, car structures, trucks or safety appliances. Suitable provison must be made to allow for thermal expansion and contraction.

(1) *Loading and unloading line.* A liquid phase transfer line must be provided and it must have a manually operated shut-off valve located as close as practicable to the outer jacket, plus a secondary closure that is liquid and gas tight. This secondary closure must permit any trapped pressure to bleed off before the closure can be removed completely. A vapor trap must be incorporated in the line and located as close as practicable to the inner tank. On a DOT–113A60W tank car, any loading and unloading line must be vacuum jacketed between the outer jacket and the shut-off valve and the shut-off valve must also be vacuum jacketed

(2) *Vapor phase line.* A vapor phase line must connect to the inner tank and must be of sufficient size to permit the pressure relief devices specified in § 179.400–20 and connected to this line to operate at their design capacity without excessive pressure build-up in the tank. The vapor phase line must have a manually operated shut-off valve located as close as practicable to the outer jacket, plus a secondary closure that is liquid and gas tight. This secondary closure must permit any trapped pressure to bleed off before the closure can be removed completely.

(3) *Vapor phase blowdown line.* A blowdown line must be provided. It must be attached to the vapor phase line specified in paragraph (a)(2) of this section, upstream of the shut-off valve in that line. A by-pass line with a manually operated shut-off valve must be provided to permit reduction of the inner

tank pressure when the vapor phase line is connected to a closed system. The discharge from this line must be outside the housing and must be directed upward and away from operating personnel.

(b) Any pressure building system provided for the purpose of pressurizing the vapor space of the inner tank to facilitate unloading the liquid lading must be approved.

§179.400–18 Test of inner tank.

(a) After all items to be welded to the inner tank have been welded in place, the inner tank must be pressure tested at the test pressure prescribed in §179.401–1. The temperature of the pressurizing medium may not exceed 100°F. during the test. The inner tank must hold the prescribed pressure for a period of not less than ten minutes without leakage or distortion. In a pneumatic test, due regard for the protection of all personnel should be taken because of the potential hazard involved. After a hydrostatic test the container and piping must be emptied of all water and purged of all water vapor.

(b) Caulking of welded joints to stop leaks developed during the test is prohibited. Repairs to welded joints must be made as prescribed in AAR Specifications for Tank Cars, appendix W.

§179.400–19 Valves and gages.

(a) *Valves.* Manually operated shut-off valves and control valves must be provided wherever needed for control of vapor phase pressure, vapor phase venting, liquid transfer and liquid flow rates. All valves must be made from approved materials compatible with the lading and having satisfactory properties at the lading temperature.

(1) Liquid control valves must be of extended stem design.

(2) Packing, if used, must be satisfactory for use in contact with the lading and of approved materials that will effectively seal the valve stem without causing difficulty of operation.

(3) Each control valve and shut-off valve must be readily operable. These valves must be mounted so that their operation will not transmit excessive forces to the piping system.

(b) *Gages.* Gages, except portable units, must be securely mounted within suitable protective housings. A liquid level gage and a vapor phase pressure gage must be provided as follows:

(1) *Liquid level gage.* (i) A gage of approved design to indicate the quantity of liquefied lading within the inner tank, mounted where it will be readily visible to an operator during transfer operations or storage, or a portable gage with a readily accessible connection, or

(ii) A fixed length dip tube, with a manually operated shut-off valve located as close as practicable to the outer jacket. The dip tube must indicate the maximum liquid level for the allowable filling density. The inner end of the dip tube must be located on the longitudinal centerline of the inner tank and within four feet of the transverse centerline of the inner tank.

(2) *Vapor phase pressure gage.* A vapor phase pressure gage of approved design, with a manually operated shut-off valve located as close as practicable to the outer jacket. The gage must indicate the vapor pressure within the inner tank and must be mounted where it will be readily visible to an operator. An additional fitting for use of a test gage must be provided.

§179.400–20 Pressure relief devices.

(a) The tank must be provided with pressure relief devices for the protection of the tank assembly and piping system. The discharge from these devices must be directed away from operating personnel, principal load bearing members of the outer jacket, car structure, trucks and safety appliances. Vent or weep holes in pressure relief devices are prohibited. All main pressure relief devices must discharge to the outside of the protective housings in which they are located, except that this requirement does not apply to pressure relief valves installed to protect isolated sections of lines between the final valve and end closure.

(b) *Materials.* Materials used in pressure relief devices must be suitable for use at the temperature of the lading and otherwise compatible with the lading in both the liquid and vapor phases.

(c) *Inner tank.* Pressure relief devices for the inner tank must be attached to

vapor phase piping and mounted so as to remain at ambient temperature prior to operation. The inner tank must be equipped with one or more pressure relief valves and one or more safety vents (except as noted in paragraph (c)(3)(iv) of this section), and installed without an intervening shut-off valve (except as noted in paragraph (c)(3)(iii) of this section). Additional requirements are as follows:

(1) *Safety vent.* The safety vent shall function at the pressure specified in § 179.401–1. The safety vent must be flow rated in accordance with the applicable provisions of AAR Specifications for Tank Cars, appendix A, and provide sufficient capacity to meet the requirements of AAR Specifications for Tanks Cars, appendix A, A8.07(a).

(2) *Pressure relief valve.* The pressure relief valve must:

(i) be set to start-to-discharge at the pressure specified in § 179.401–1, and

(ii) meet the requirements of AAR Specifications for Tank Cars, appendix A, A8.07(b).

(3) *Installation of safety vent and pressure relief valve.*

(i) *Inlet piping.*

(A) The opening through all piping and fittings between the inner tank and its pressure relief devices must have a cross-sectional area at least equal to that of the pressure relief device inlet, and the flow characteristics of this upstream system must be such that the pressure drop will not adversely affect the relieving capacity or the proper operation of the pressure relief device.

(B) When the required relief capacity is met by the use of multiple pressure relief device placed on one connection, the inlet internal cross-sectional area of this connection must be sufficient to provide the required flow capacity for the proper operation of the pressure relief device system.

(ii) *Outlet piping.*

(A) The opening through the discharge lines must have a cross-sectional area at least equal to that of the pressure relief device outlet and may not reduce the relieving capacity below that required to properly protect the inner tank.

(B) When the required relieving capacity is met by use of multiple pressure relief devices placed on a common discharge manifold, the manifold outlet internal cross-sectional area must be at least equal to the combined outlet areas of the pressure relief devices.

(iii) Duplicate pressure relief devices may be used when an approved 3-way selector valve is installed to provide for relief through either duplicate pressure relief device. The 3-way valve must be included in the mounting prescribed by AAR Specifications for Tank Cars, appendix A, A6.02(g), when conducting the flow capacity test on the safety vent prescribed by AAR Specifications for Tank Cars, appendix A, A6.01. Flow capacity tests must be performed with the 3-way valve at both of the extreme positions as well as at the mid-position and the flow capacity must be in accordance with AAR Specifications for Tank Cars, appendix A, A8.07(a).

(iv) An alternate pressure relief valve, set as required in § 179.401–1, may be used in lieu of the safety vent, provided it meets the flow capacity prescribed in AAR Specifications for Tank Cars, appendix A at a flow rating pressure of 110 percent of its start-to-discharge pressure. Installation must—

(A) Prevent moisture accumulation at the seat by providing drainage away from that area,

(B) Permit periodic drainage of the vent piping, and

(C) Prevent accumulation of foreign material in the vent system.

(4) *Evaporation control.* The routine release of vaporized lading may be controlled with a pressure controlling and mixing device, except that a pressure controlling and mixing device is required on each DOT–113A60W car. Any pressure controlling and mixing device must—

(i) Be set to start-to-discharge at a pressure not greater than that specified in § 179.401–1;

(ii) Have sufficient capacity to limit the pressure within the inner tank to that pressure specified in § 179.401–1, when the discharge is equal to twice the normal venting rate during transportation, with normal vacuum and the outer shell at 130°F; and

(iii) Prevent the discharge of a gas mixture exceeding 50% of the lower flammability limit to the atmosphere

under normal conditions of storage or transportation.

(5) *Safety interlock.* If a safety interlock is provided for the purpose of allowing transfer of lading at a pressure higher than the pressure control valve setting but less than the pressure relief valve setting, the design must be such that the safety interlock will not affect the discharge path of the pressure relief value or safety vent at any time. The safety interlock must automatically provide an unrestricted discharge path for the pressure control device at all times when the tank car is in transport service.

(d) *Outer jacket.* The outer jacket must be provided with a suitable system to prevent buildup of annular space pressure in excess of 16 psig or the external pressure for which the inner tank was designed, whichever is less. The total relief area provided by the system must be a minimum of 25 square inches, and means must be provided to prevent clogging of any system opening, as well as to ensure adequate communication to all areas of the insulation space. If a safety vent is a part of the system, it must be designed to prevent distortion of the frangible disc when the annular space is evacuated.

(e) *Piping system.* Where a piping circuit can be isolated by closing a valve, means for pressure relief must be provided.

§179.400–21 Test of pressure relief valves.

Each valve must be tested with air or gas for compliance with §179.401–1 before being put into service.

§179.400–22 Protective housings.

Each valve, gage, closure and pressure relief device, with the exception of secondary relief valves for the protection of isolated piping, must be enclosed within a protective housing. The protective housing must be adequate to protect the enclosed components from direct solar radiation, mud, sand, adverse environmental exposure and mechanical damage incident to normal operation of the tank car. It must be designed to provide reasonable access to the enclosed components for operation, inspection and maintenance and so that vapor concentrations cannot build up to a dangerous level inside the housing in the event of valve leakage or pressure relief valve operation. All equipment within the protective housing must be operable by personnel wearing heavy gloves and must incorporate provisions for locks or seals. A protective housing and its cover must be constructed of metal not less than 0.119 inch thick.

§179.400–23 Operating instructions.

All valves and gages must be clearly identified with corrosion-resistant nameplates. A plate of corrosion-resistant material bearing precautionary instructions for the safe operation of the equipment during storage and transfer operations must be securely mounted so as to be readily visible to an operator. The instruction plate must be mounted in each housing containing operating equipment and controls for product handling. These instructions must include a diagram of the tank and its piping system with the various gages, control valves and pressure relief devices clearly identified and located.

§179.400–24 Stamping.

(a) A tank that complies with all specification requirements must have the following information plainly and permanently stamped into the metal near the center of the head of the outer jacket at the ''B'' end of the car, in letters and figures at least ⅜-inch high, in the following order:

	Example of required stamping
Specification	DOT–113A60W.
Design service temperature	Minus 423° F.
Inner tank	Inner Tank.
Material	ASTM A240–304.
Shell thickness	Shell 3/16 inch.
Head thickness	Head 3/16 inch.
Inside diameter	ID 107 inch.
Inner tank builder's initials	ABC.
Date of original test (month and year) and initials of person conducting original test.	00–0000GHK.
Water capacity	00000 lbs.
Outer jacket	Outer jacket.
Material	ASTM A515–70.
Outer jacket builder's initials	DEF.
Car assembler's initials (if other than inner tank or outer jacket builder).	XYZ.

(b) Any stamping on the shell or heads of the inner tank is prohibited.

(c) In lieu of the stamping required by paragraph (a) of this section, the specified markings may be incorporated on a data plate of corrosion-resistant metal, fillet welded in place on the head of the outer jacket at the ''B'' end of the car.

§ 179.400–25 Stenciling.

Each tank car must be stenciled in compliance with the provisions of the AAR Specifications for Tank Cars, appendix C. The stenciling must also include the following:

(a) The date on which the frangible disc was last replaced and the initials of the person making the replacement, on the outer jacket in letters and figures at least 1½ inches high.

(b) The design service temperature and maximum lading weight, in letters and figures at least 1½ inches high adjacent to the hazardous material stencil.

(c) The water capacity, in pounds net at 60°F., with the tank at its coldest operating temperature, after deduction for the volume above the inlet to the pressure relief device or pressure control valve, structural members, baffles, piping, and other appurtenances inside the tank, in letters and figures at least 1½ inches high.

(d) Both sides of the tank car, in letters at least 1½ inches high, with the statement ''Do Not Hump or Cut Off While in Motion.''

(e) The outer jacket, below the tank classification stencil, in letters at least 1½ inches high, with the statement, ''vacuum jacketed.''

§ 179.401 Individual specification requirements applicable to inner tanks for cryogenic liquid tank car tanks.

§ 179.401–1 Individual specification requirements.

In addition to § 179.400, the individual specification requirements for the inner tank and its appurtenances are as follows:

DOT specification	113A60W	113C120W
Design service temperature, °F.	−423	−260.
Material	§ 179.400–5	§ 179.400–5.
Impact test (weld and plate material).	§ 179.400–5(c)	§ 179.400–5(c).
Impact test values	§ 179.400–5(d)	§ 179.400–5(d).
Standard heat transfer rate. (Btu per day per lb. of water capacity, max.) (see § 179.400–4).	0.097	0.4121.
Bursting pressure, min. psi.	240	300.
Minimum plate thickness shell, inches (see § 179.400–7(a)).	3/16	3/16.
Minimum head thickness, inches (see § 179.400–7 (a), (b), and (c)).	3/16	3/16.
Test pressure, psi (see § 179.400–16).	60	120.
Safety vent bursting pressure, max. psi.	60	120.
Pressure relief valve start-to-discharge pressure, psi (± 3 psi).	30	75.
Pressure relief valve vapor tight pressure, min. psi.	24	60.
Pressure relief valve flow rating pressure, max. psi.	40	85.
Alternate pressure relief valve start to-discharge pressure, psi (± 3 psi).		90.
Alternate pressure relief valve vapor tight pressure, min. psi.		72.
Alternate pressure relief valve flow rating pressure, max. psi.		100.
Pressure control valve Start-to-vent, max. psi (see § 179.400–20(c)(4)).	17	Not required.
Relief device discharge restrictions.	§ 179.400–20	179.400–20.
Transfer line insulation	§ 179.400–17	Not required.

[Amdt. 179–32, 48 FR 27708, June 16, 1983, as amended at 49 FR 24318, June 12, 1984]

§ 179.500 Specification DOT–107A * * * * seamless steel tank car tanks.

§ 179.500–1 Tanks built under these specifications shall meet the requirements of § 179.500.

§ 179.500–3 Type and general requirements.

(a) Tanks built under this specification shall be hollow forged or drawn in one piece. Forged tanks shall be machined inside and outside before ends are necked-down and, after necking-down, the ends shall be machined to size on the ends and outside diameter. Machining not necessary on inside or

outside of seamless steel tubing, but required on ends after necking-down.

(b) For tanks made in foreign countries, chemical analysis of material and all tests as specified must be carried out within the limits of the United States under supervision of a competent and disinterested inspector; in addition to which, provisions in §179.500–18 (b) and (c) shall be carried out at the point of manufacture by a recognized inspection bureau with principal office in the United States.

(c) The term ''marked end'' and ''marked test pressure'' used throughout this specification are defined as follows:

(1) ''Marked end'' is that end of the tank on which marks prescribed in §179.500–17 are stamped.

(2) ''Marked test pressure'' is that pressure in pounds per square inch which is indicated by the figures substituted for the **** in the marking DOT–107A **** stamped on the marked end of tank.

(d) The gas pressure at 130 F in the tank shall not exceed 7/10 of the marked test pressure of the tank.

§179.500–4 Thickness of wall.

(a) Minimum thickness of wall of each finished tank shall be such that at a pressure equal to 7/10 of the marked test pressure of the tank, the calculated fiber stress in pounds per square inch at inner wall of tank multiplied by 3.0 will not exceed the tensile strength of any specimen taken from the tank and tested as prescribed in §179.500–7(b). Minimum wall thickness shall be ¼ inch.

(b) Calculations to determine the maximum marked test pressure permitted to be marked on the tank shall be made by the formula:

$$P=[10S(D^2-d^2)]/[7(D^2+d^2)]$$

where:

P=Maximum marked test pressure permitted;

$$S=U/3.0$$

where:

U=Tensile strength of that specimen which shows the lower tensile strength of the two specimens taken from the tank and tested as prescribed in §179.500–7(b).

3=Factor of safety.

$(D^2-d^2/(D^2+d^2)$=The smaller value obtained for this factor by the operations specified in §179.500–4(c).

(c) Measure at one end, in a plane perpendicular to the longitudinal axis of the tank and at least 18 inches from that end before necking-down:

d=Maximum inside diameter (inches) for the location under consideration; to be determined by direct measurement to an accuracy of 0.05 inch.

t=Minimum thickness of wall for the location under consideration; to be determined by direct measurement to an accuracy of 0.001 inch.

Take $D=d+2t$.

Calculate the value of $(D^2-d^2)/(D^2+d^2)$

(1) Make similar measurements and calculation for a corresponding location at the other end of the tank.

(2) Use the smaller result obtained, from the foregoing, in making calculations prescribed in paragraph (b) of this section.

[29 FR 18995, Dec. 29, 1964. Redesignated at 32 FR 5606, Apr. 5, 1967, and amended by Amdt. 179–31, 47 FR 43067, Sept. 30, 1982]

§179.500–5 Material.

(a) Tanks shall be made from open-hearth or electric steel of uniform quality. Material shall be free from seams, cracks, laminations, or other defects injurious to finished tank. If not free from such defects, the surface may be machined or ground to eliminate these defects. Forgings and seamless tubing for bodies of tanks shall be stamped with heat numbers.

(b) Steel (see Note 1) must conform to the following requirements as to chemical composition:

Designation	Class I (percent)	Class II (percent)	Class III (percent)
Carbon, maximum	0.50	0.50	0.53
Manganese, maximum	1.65	1.65	1.85
Phosphorus, maximum	.05	.05	.05
Sulphur, maximum	.06	.05	.05
Silicon, maximum	.35	.30	.37
Molybdenum, maximum	.....	.25	.30
Chromium, maximum	.....	.30	.30
Sum of manganese and carbon not over	2.10	2.10	.....

NOTE 1: Alternate steel containing other alloying elements may be used if approved.

(1) For instructions as to the obtaining and checking of chemical analysis, see §179.500–18(b)(3).

(2) [Reserved]

§ 179.500–6 Heat treatment.

(a) Each necked-down tank shall be uniformly heat treated. Heat treatment shall consist of annealing or normalizing and tempering for Class I, Class II and Class III steel or oil quenching and tempering for Class III steel. Tempering temperatures shall not be less than 1000° F. Heat treatment of alternate steels shall be approved. All scale shall be removed from outside of tank to an extent sufficient to allow proper inspection.

(b) To check uniformity of heat treatment, Brinnel hardness tests shall be made at 18 inch intervals on the entire longitudinal axis. The hardness shall not vary more than 35 points in the length of the tank. No hardness tests need be taken within 12 inches from point of head to shell tangency.

(c) A magnetic particle inspection shall be performed after heat treatment on all tanks subjected to a quench and temper treatment to detect the presence of quenching cracks. Cracks shall be removed to sound metal by grinding and the surface exposed shall be blended smoothly into the surrounding area. A wall thickness check shall then be made of the affected area by ultrasonic equipment or other suitable means acceptable to the inspector and if the remaining wall thickness is less than the minimum recorded thickness as determined by § 179.500–4(b) it shall be used for making the calculation prescribed in paragraph (b) of this section.

§ 179.500–7 Physical tests.

(a) Physical tests shall be made on two test specimens 0.505 inch in diameter within 2-inch gauge length, taken 180 degrees apart, one from each ring section cut from each end of each forged or drawn tube before necking-down, or one from each prolongation at each end of each necked-down tank. These test specimen ring sections or prolongations shall be heat treated, with the necked-down tank which they represent. The width of the test specimen ring section must be at least its wall thickness. Only when diameters and wall thickness will not permit removal of 0.505 by 2-inch tensile test bar, laid in the transverse direction, may test bar cut in the longitudinal direction be substituted. When the thickness will not permit obtaining a 0.505 specimen, then the largest diameter specimen obtainable in the longitudinal direction shall be used. Specimens shall have bright surface and a reduced section. When 0.505 specimen is not used the gauge length shall be a ratio of 4 to 1 length to diameter.

(b) Elastic limit as determined by extensometer, shall not exceed 70 percent of tensile strength for class I steel or 85 percent of tensile strength for class II and class III steel. Determination shall be made at cross head speed of not more than 0.125 inch per minute with an extensometer reading to 0.0002 inch. The extensometer shall be read at increments of stress not exceeding 5,000 pounds per square inch. The stress at which the strain first exceeds

stress (pounds per square inch)/30,000,000 (pounds per square inch) +0.005 (inches per inch)

shall be recorded as the elastic limit.

(1) Elongation shall be at least 18 percent and reduction of area at least 35 percent.

NOTE 1: Upon approval, the ratio of elastic limit to ultimate strength may be raised to permit use of special alloy steels of definite composition that will give equal or better physical properties than steels herein specified.

(2) [Reserved]

[Amdt. 179–8, 36 FR 18470, Sept. 15, 1971]

§ 179.500–8 Openings in tanks.

(a) Each end shall be closed by a cover made of forged steel. Covers shall be secured to ends of tank by through bolts or studs not entering interior of tank. Covers shall be of a thickness sufficient to meet test requirements of § 179.500–12 and to compensate for the openings closed by attachments prescribed herein.

(1) It is also provided that each end may be closed by internal threading to accommodate an approved fitting. The internal threads as well as the threads on fittings for these openings shall be clean cut, even, without checks, and tapped to gauge. Taper threads are required and shall be of a length not less than as specified for American Standard taper pipe threads. External threading of an approved type shall be

permissible on the internal threaded ends.

(b) Joints between covers and ends and between cover and attachments shall be of approved form and made tight against vapor or liquid leakage by means of a confined gasket of suitable material.

§179.500–10 Protective housing.

(a) Safety devices, and loading and unloading valves on tanks shall be protected from accidental injury by approved metal housing, arranged so it may be readily opened to permit inspection and adjustment of safety relief devices and valves, and securely locked in closed position. Housing shall be provided with opening having an opening equal to twice the total discharge area of safety relief device enclosed.

(b) [Reserved]

§179.500–11 Loading and unloading valves.

(a) Loading and unloading valve or valves shall be mounted on the cover or threaded into the marked end of tank. These valves shall be of approved type, made of metal not subject to rapid deterioration by lading or in service, and shall withstand without leakage a pressure equal to the marked test pressure of tank. Provision shall be made for closing service outlet of valves.

(b) [Reserved]

§179.500–12 Safety relief devices.

(a) Tank shall be equipped with one or more safety relief devices of approved type and discharge area, mounted on the cover or threaded into the non-marked end of the tank. If fittings are mounted on a cover, they shall be of the flanged type, made of metal not subject to rapid deterioration by lading or in service. Total flow capacity shall be such that, with tank filled with air at pressure equal to 70 percent of the marked test pressure of tank, flow capacity will be sufficient to reduce air pressure to 30 percent of the marked test pressure within 3 minutes after safety relief device opens.

(b) Safety relief devices shall open at pressure not exceeding the marked test pressure of tank and not less than 7/10 of marked test pressure. (For tolerance for safety relief valves, see §179.500–16(a).)

(c) Cars used for the transportation of flammable gases shall have the safety devices equipped with an approved ignition device.

§179.500–13 Fixtures.

(a) Attachments, other than those mounted on tank covers or serving as threaded closures for the ends of the tank, are prohibited.

(b) [Reserved]

§179.500–14 Test of tanks.

(a) After heat-treatment, tanks shall be subjected to hydrostatic tests in a water jacket, or by other accurate method, operated so as to obtain reliable data. No tank shall have been subjected previously to internal pressure greater than 90 percent of the marked test pressure. Each tank shall be tested to a pressure at least equal to the marked test pressure of the tank. Pressure shall be maintained for 30 seconds, and sufficiently longer to insure complete expansion of tank. Pressure gauge shall permit reading to accuracy of one percent. Expansion gauge shall permit reading of total expansion to accuracy of one percent. Expansion shall be recorded in cubic centimeters.

(b) No leaks shall appear and permanent volumetric expansion shall not exceed 10 percent of the total volumetric expansion at test pressure.

§179.500–15 Handling of tanks failing in tests.

(a) Tanks rejected for failure in any of the tests prescribed may be reheat-treated, and will be acceptable if subsequent to reheat-treatment they are subjected to and pass all of the tests.

(b) [Reserved]

§179.500–16 Tests of safety relief devices.

(a) Safety relief valves shall be tested by air or gas before being put into service. Valve shall open at pressure not exceeding the marked test pressure of tank and shall be vapor-tight at 80 percent of the marked test pressure. These limiting pressures shall not be affected by any auxiliary closure or other combination.

(b) For safety relief devices of frangible disc type, samples of discs used shall burst at a pressure not exceeding the marked test pressure of tank and not less than 7/10 of marked test pressure.

§ 179.500–17 Marking.

(a) Each tank shall be plainly and permanently marked, thus certifying that tank complies with all requirements of this specification. These marks shall be stamped into the metal of necked-down section of tank at marked end, in letters and figures at least ¼ inch high, as follows:

(1) Spec. DOT–107A * * * *, the * * * * to be replaced by figures indicating marked test pressure of the tank. This pressure shall not exceed the calculated maximum marked test pressure permitted, as determined by the formula in § 179.500–4(b).

(2) Serial number immediately below the stamped mark specified in paragraph (a)(1) of this section.

(3) Inspector's official mark immediately below the stamped mark specified in paragraph (a)(1) of this section.

(4) Name, mark (other than trademark), or initials of company or person for whose use tank is being made, which shall be recorded with the Bureau of Explosives.

(5) Date (such as 1–62, for January 1962) of tank test, so placed that dates of subsequent tests may easily be added thereto.

(6) Date (such as 1–62, for January 1962) of latest test of safety relief valve or of frangible disc, required only when tank is used for transportation of flammable gases.

(b) [Reserved]

[29 FR 18995, Dec. 29, 1964, as amended by Amdt. 179–52, 61 FR 28682, June 5, 1996]

§ 179.500–18 Inspection and reports.

(a) Before a tank car is placed in service, the party assembling the completed car shall furnish to car owner, Bureau of Explosives, and the Secretary, Mechanical Division, Association of American Railroads, a report in proper form certifying that tanks and their equipment comply with all the requirements of this specification and including information as to serial numbers, dates of tests, and ownership marks on tanks mounted on car structure.

(b) Purchaser of tanks shall provide for inspection by a competent inspector as follows:

(1) Inspector shall carefully inspect all material and reject that not complying with § 179.500–5.

(2) Inspector shall stamp his official mark on each forging or seamless tube accepted by him for use in making tanks, and shall verify proper application of heat number to such material by occasional inspections at steel manufacturer's plant.

(3) Inspector shall obtain certified chemical analysis of each heat of material.

(4) Inspector shall make inspection of inside surface of tanks before necking-down, to insure that no seams, cracks, laminations, or other defects exist.

(5) Inspector shall fully verify compliance with specification, verify heat treatment of tank as proper; obtain samples for all tests and check chemical analyses; witness all tests; and report minimum thickness of tank wall, maximum inside diameter, and calculated value of D, for each end of each tank as prescribed in § 179.500–4(c).

(6) Inspector shall stamp his official mark on each accepted tank immediately below serial number, and make certified report (see paragraph (c) of this section) to builder, to company or person for whose use tanks are being made, to builder of car structure on which tanks are to be mounted, to the Bureau of Explosives, and to the Secretary, Mechanical Division, Association of American Railroads.

(c) Inspector's report required herein shall be in the following form:

(Place) _____
(Date) _____

STEEL TANKS

It is hereby certified that drawings were submitted for these tanks under AAR Application for Approval _____ and approved by the AAR Committee on Tank Cars under date of _____.

Built for _____ Company
Location at _____
Built by _____ Company
Location at _____
Consigned to _____ Company
Location at _____
Quantity _____

Length (inches) ———————————
Outside diameter (inches) ———————————
Marks stamped into tank as required in § 179.500–17 are:

DOT–107A* * * *

NOTE 1: The marked test pressure substituted for the * * * * on each tank is shown on Record of General Data on Tanks attached hereto.

Serial numbers —— to —— inclusive
Inspector's mark ———————————
Owner's mark ———————————
Test date ———————————
Water capacity (see Record of Hydrostatic Tests).
Tare weights (yes or no) (see Record of Hydrostatic Tests).
These tanks were made by process of ———

Steel used was identified as indicated by the attached list showing the serial number of each tank, followed by the heat number.

Steel used was verified as to chemical analysis and record thereof is attached hereto. Heat numbers were stamped into metal. All material was inspected and each tank was inspected both before and after closing in ends; all material accepted was found free from seams, cracks, laminations, and other defects which might prove injurious to strength of tank. Processes of manufacture and heat-treatment of tanks were witnessed and found to be efficient and satisfactory.

Before necking-down ends, each tank was measured at each location prescribed in § 179.500–4(c) and minimum wall thickness in inches at each location was recorded; maximum inside diameter in inches at each location was recorded; value of D in inches at each location was calculated and recorded; maximum fiber stress in wall at location showing larger value for

$$(D^2+d^2)/(D^2-d^2)$$

was calculated for 7/10 the marked test pressure and recorded. Calculations were made by the formula:

$$S=[0.7P(D^2-d^2)/(D^2+d^2)]$$

Hydrostatic tests, tensile test of material, and other tests as prescribed in this specification, were made in the presence of the inspector, and all material and tanks accepted were found to be in compliance with the requirements of this specification. Records thereof are attached hereto.

I hereby certify that all of these tanks proved satisfactory in every way and comply with the requirements of Department of Transportation Specification No. 107A* * * *.

(Signed) ———————————
(Inspector)
(Place) ———————————
(Date) ———————————

RECORD OF CHEMICAL ANALYSIS OF STEEL FOR TANKS

Numbered ——— to ——— inclusive
Size —— inches outside diameter by ——inches long
Built by ——————————— Company
For ——————————— Company

Heat No.	Tanks represented (serial Nos.)	Chemical analysis							
		C	Mn	P	S	Si	Ni	Cr	Mo

These analyses were made by
(Signed) ———————————
(Place) ———————————
(Date) ———————————

RECORD OF CHEMICAL ANALYSIS OF STEEL IN TANKS

Numbered ——— to ——— inclusive
Size —— inches outside by —— inches long
Built by ——————————— Company
For ——————————— Company

Heat No.	Tanks represented by test (serial Nos.)	Elastic limit (pounds per square inch)	Tensile strength (pounds per square inch)	Elongation (percent in 2 inches)	Reduction of area (percent)

(Signed) ———————————

(Place) .....
(Date) .....

RECORD OF HYDROSTATIC TESTS ON TANKS

Numbered ..... to ..... inclusive
Size ..... inches outside by .... inches long
Built by ..... Company
For ..... Company

Serial Nos. of tanks	Actual test pressure (pounds per square inch)	Total expansion (cubic centimeters)	Permanent expansion (cubic centimeters)	Percent ratio of permanent expansion to total expansion[1]	Tare weight (pounds)[2]	Capacity in pounds of water at 60° F

[1] If tests are made by method involving measurement of amount of liquid forced into tank by test pressure, then the basic data on which calculations are made, such as pump factors, temperature of liquid, coefficient of compressibility of liquid, etc., must also be given.

[2] Do not include protective housing, but state whether with or without valves.

(Signed) .....
(Place) .....
(Date) .....

RECORD OF GENERAL DATA ON TANKS

Numbered ..... to ..... inclusive
Built by ..... Company
For ..... Company

Data obtained as prescribed in § 179.500–4(c)							Larger value of the factor D^2+d^2/D^2-d^2	(S) Calculated fiber stress in pounds per square inch at marked test pressure	Marked test pressure in pounds per square inch stamped in tank	Minimum tensile strength of material in pounds per square inch recorded
Marked end of tank				Other end of tank						
Serial No. of tank	(t) Min. thickness of wall in inches	(d) Max. inside diameter in inches	(D) Calculated value of *D* in inches=*d*+2t	(t) Minimum thickness of wall in inches	(d) Maximum inside diameter in inches	(*D*) calculated value of *D* in inches=*d*+2t				

(Signed) .....

APPENDIX A TO PART 179—PROCEDURES FOR TANK-HEAD PUNCTURE-RESISTANCE TEST

1. This test procedure is designed to verify the integrity of new or untried tank-head puncture-resistance systems and to test for system survivability after coupler-to-tank-head impacts at relative speeds of 29 km/hour (18 mph). Tank-head puncture-resistance is a function of one or more of the following: Head thickness, jacket thickness, insulation thickness, and material of construction.

2. *Tank-head puncture-resistance test.* A tank-head puncture-resistance system must be tested under the following conditions:

a. The ram car used must weigh at least 119,295 kg (263,000 pounds), be equipped with a coupler, and duplicate the condition of a conventional draft sill including the draft yoke and draft gear. The coupler must protrude from the end of the ram car so that it is the leading location of perpendicular contact with the impacted test car.

b. The impacted test car must be loaded with water at six percent outage with internal pressure of at least 6.9 Bar (100 psi) and coupled to one or more ''backup'' cars which have a total weight of 217,724 kg (480,000 pounds) with hand brakes applied on the last ''backup'' car.

c. At least two separate tests must be conducted with the coupler on the vertical centerline of the ram car. One test must be conducted with the coupler at a height of 53.3 cm (21 inches), plus-or-minus 2.5 cm (1 inch), above the top of the sill; the other test must be conducted with the coupler height at 79 cm (31 inches), plus-or-minus 2.5 cm (1 inch), above the top of the sill. If the combined thickness of the tank head and any additional shielding material is less than the combined thickness on the vertical centerline of the car, a third test must be conducted with the coupler positioned so as to strike the thinnest point of the tank head.

3. One of the following test conditions must be applied:

Minimum weight of attached ram cars in kg (pounds)	Minimum velocity of impact in km/hour (mph)	Restrictions
119,295 (263,000) ...	29 (18)	One ram car only.
155,582 (343,000) ...	25.5 (16)	One ram car or one car plus one rigidly attached car.
311,164 (686,000) ...	22.5 (14)	One ram car plus one or more rigidly attached cars.

4. A test is successful if there is no visible leak from the standing tank car for at least one hour after impact.

[Amdt. 179–50, 60 FR 49078, Sept. 21, 1995, as amended by Amdt. 179–50, 61 FR 33256, June 26, 1996]

APPENDIX B TO PART 179—PROCEDURES FOR SIMULATED POOL AND TORCH-FIRE TESTING

1. This test procedure is designed to measure the thermal effects of new or untried thermal protection systems and to test for system survivability when exposed to a 100-minute pool fire and a 30-minute torch fire.

2. *Simulated pool fire test.*

a. A pool-fire environment must be simulated in the following manner:

(1) The source of the simulated pool fire must be hydrocarbon fuel with a flame temperature of 871 °C (1,600 °F), plus-or-minus 37.8 °C (100 °F), throughout the duration of the test.

(2) A square bare plate with thermal properties equivalent to the material of construction of the tank car must be used. The plate dimensions must be not less than one foot by one foot by nominal 1.6 cm (0.625 inch) thick. The bare plate must be instrumented with not less than nine thermocouples to record the thermal response of the bare plate. The thermocouples must be attached to the surface not exposed to the simulated pool fire and must be divided into nine equal squares with a thermocouple placed in the center of each square.

(3) The pool-fire simulator must be constructed in a manner that results in total flame engulfment of the front surface of the bare plate. The apex of the flame must be directed at the center of the plate.

(4) The bare plate holder must be constructed in such a manner that the only heat transfer to the back side of the bare plate is by heat conduction through the plate and not by other heat paths.

(5) Before the bare plate is exposed to the simulated pool fire, none of the temperature recording devices may indicate a plate temperature in excess of 37.8 °C (100 °F) nor less than 0 °C (32 °F).

(6) A minimum of two thermocouple devices must indicate 427 °C (800 °F) after 13 minutes, plus-or-minus one minute, of simulated pool-fire exposure.

b. A thermal protection system must be tested in the simulated pool-fire environment described in paragraph 2a of this appendix in the following manner:

(1) The thermal protection system must cover one side of a bare plate as described in paragraph 2a(2) of this appendix.

(2) The non-protected side of the bare plate must be instrumented with not less than nine thermocouples placed as described in paragraph 2a(2) of this appendix to record the thermal response of the plate.

(3) Before exposure to the pool-fire simulation, none of the thermocouples on the thermal protection system configuration may indicate a plate temperature in excess of 37.8 °C (100 °F) nor less than 0 °C (32 °F).

(4) The entire surface of the thermal protection system must be exposed to the simulated pool fire.

(5) A pool-fire simulation test must run for a minimum of 100 minutes. The thermal protection system must retard the heat flow to the plate so that none of the thermocouples on the non-protected side of the plate indicate a plate temperature in excess of 427 °C (800 °F).

(6) A minimum of three consecutive successful simulation fire tests must be performed for each thermal protection system.

3. *Simulated torch fire test.*

a. A torch-fire environment must be simulated in the following manner:

(1) The source of the simulated torch must be a hydrocarbon fuel with a flame temperature of 1,204 °C (2,200 °F), plus-or-minus 37.8 °C (100 °F), throughout the duration of the test. Furthermore, torch velocities must be 64.4 km/h ± 16 km/h (40 mph ± 10 mph) throughout the duration of the test.

(2) A square bare plate with thermal properties equivalent to the material of construction of the tank car must be used. The plate dimensions must be at least four feet by four feet by nominal 1.6 cm (0.625 inch) thick. The bare plate must be instrumented with not less than nine thermocouples to record the thermal response of the plate. The thermocouples must be attached to the surface not exposed to the simulated torch and must be divided into nine equal squares with a thermocouple placed in the center of each square.

(3) The bare plate holder must be constructed in such a manner that the only heat transfer to the back side of the plate is by heat conduction through the plate and not by other heat paths. The apex of the flame must be directed at the center of the plate.

(4) Before exposure to the simulated torch, none of the temperature recording devices may indicate a plate temperature in excess of 37.8 °C (100 °F) or less than 0 °C (32 °F).

(5) A minimum of two thermocouples must indicate 427 °C (800 °F) in four minutes, plus-or-minus 30 seconds, of torch simulation exposure.

b. A thermal protection system must be tested in the simulated torch-fire environment described in paragraph 3a of this appendix in the following manner:

(1) The thermal protection system must cover one side of the bare plate identical to that used to simulate a torch fire under paragraph 3a(2) of this appendix.

(2) The back of the bare plate must be instrumented with not less than nine

thermocouples placed as described in paragraph 3a(2) of this appendix to record the thermal response of the material.

(3) Before exposure to the simulated torch, none of the thermocouples on the back side of the thermal protection system configuration may indicate a plate temperature in excess of 37.8 °C (100 °F) nor less than 0 °C (32 °F).

(4) The entire outside surface of the thermal protection system must be exposed to the simulated torch-fire environment.

(5) A torch-simulation test must be run for a minimum of 30 minutes. The thermal protection system must retard the heat flow to the plate so that none of the thermocouples on the backside of the bare plate indicate a plate temperature in excess of 427 °C (800 °F).

(6) A minimum of two consecutive successful torch-simulation tests must be performed for each thermal protection system.

[Amdt. 179–50, 60 FR 49078, Sept. 21, 1995]

PART 180—CONTINUING QUALIFICATION AND MAINTENANCE OF PACKAGINGS

Subpart A—General

Sec.
180.1 Purpose and scope.
180.2 Applicability.
180.3 General requirements.

Subparts B–C [Reserved]

Subpart D—Qualification and Maintenance of Intermediate Bulk Containers

180.350 Applicability.
180.351 Qualification of intermediate bulk containers.
180.352 Requirements for retest and inspection of intermediate bulk containers.

Subpart E—Qualification and Maintenance of Cargo Tanks

180.401 Applicability.
180.403 Definitions.
180.405 Qualification of cargo tanks.
180.407 Requirements for test and inspection of specification cargo tanks.
180.409 Minimum qualifications for inspectors and testers.
180.411 Acceptable results of tests and inspections.
180.413 Repair, modification, stretching, or rebarrelling of cargo tanks.
180.415 Test and inspection markings.
180.417 Reporting and record retention requirements.

Subpart F—Qualification and Maintenance of Tank Cars

180.501 Applicability.
180.503 Definitions.
180.505 Quality assurance program.
180.507 Qualification of tank cars.
180.509 Requirements for inspection and test of specification tank cars.
180.511 Acceptable results of inspections and tests.
180.513 Repairs, alterations, conversions, and modifications.
180.515 Markings.
180.517 Reporting and record retention requirements.
180.519 Periodic retest and inspection of tank cars other than single-unit tank car tanks.

AUTHORITY: 49 U.S.C. 5101–5127; 49 CFR 1.53.

SOURCE: Amdt. 180–2, 54 FR 25032, June 12, 1989, unless otherwise noted.

Subpart A—General

§ 180.1 Purpose and scope.

This part prescribes requirements pertaining to the maintenance, reconditioning, repair, inspection and testing of packagings, and any other function having an effect on the continuing qualification and use of a packaging under the requirements of this subchapter.

§ 180.2 Applicability.

(a) Any person who performs a function prescribed in this part shall perform that function in accordance with this part.

(b) Any person who performs a function prescribed in this part is considered subject to the regulations of this subchapter when that person—

(1) Makes any representation indicating compliance with one or more of the requirements of this part; or

(2) Reintroduces into commerce a packaging that bears markings indicating compliance with this part.

[Amdt. 180–2, 54 FR 25032, June 12, 1989, as amended by Amdt. 180–2, 56 FR 27877, June 17, 1991]

§ 180.3 General requirements.

(a) No person may represent, mark, certify, sell, or offer a packaging or container as meeting the requirements

of this part, or an exemption pertaining to this part issued under subchapter A of this chapter, whether or not the packaging or container is intended to be used for the transportation of a hazardous material, unless it is marked, maintained, reconditioned, repaired, or retested, as appropriate, in accordance with this part, an approval issued thereunder, or an exemption issued under subchapter A of this chapter.

(b) The representations, markings, and certifications subject to the prohibitions of paragraph (a) of this section include:

(1) Identifications that include the letters ''DOT'', ''MC'', ''ICC'', or ''UN'';

(2) Exemption, approval, and registration numbers that include the letters ''DOT'';

(3) Test dates displayed in association with specification, registration, approval, or exemption markings indicating conformance to a test or retest requirement of this subchapter, an approval issued thereunder, or an exemption issued under subchapter A of this chapter;

(4) Documents indicating conformance to the testing, inspection, maintenance or other continuing qualification requirements of this part; and

(5) Sales literature, including advertising, indicating that the packaging or container represented therein conforms to requirements contained in subchapter A or C of this chapter.

[Amdt. 180–2, 54 FR 25032, June 12, 1989, as amended by Amdt. 180–3, 58 FR 33306, June 16, 1993]

Subparts B–C [Reserved]

Subpart D—Qualification and Maintenance of Intermediate Bulk Containers

SOURCE: Amdt. 180–5, 59 FR 38079, July 26, 1994, unless otherwise noted.

§180.350 Applicability.

This subpart prescribes requirements, in addition to those contained in parts 107, 171, 172, 173, and 178 of this chapter, applicable to any person responsible for the continuing qualification, maintenance, or periodic retesting of an intermediate bulk container.

§180.351 Qualification of intermediate bulk containers.

(a) *General.* Each intermediate bulk container used for the transportation of hazardous materials must be an authorized packaging.

(b) *Intermediate bulk container specifications.* To qualify as an authorized packaging, each intermediate bulk container must conform to this subpart, the applicable requirements specified in part 173 of this subchapter, and the applicable requirements of subparts N and O of part 178 of this subchapter.

§180.352 Requirements for retest and inspection of intermediate bulk containers.

(a) *General.* Each intermediate bulk container constructed in accordance with a UN standard for which a test or inspection specified in paragraphs (b)(1), (b)(2) and (b)(3) of this section is required may not be filled and offered for transportation or transported until the test or inspection has been successfully completed. This paragraph does not apply to any intermediate bulk container filled prior to the test or inspection due date. The requirements in this section do not apply to DOT 56 and 57 portable tanks.

(b) *Test and inspections for metal, rigid plastic, and composite intermediate bulk containers.* Each intermediate bulk container is subject to the following test and inspections:

(1) The leakproofness test prescribed in §178.813 of this subchapter must be conducted every 2.5 years starting from the date of manufacture marked on each intermediate bulk container intended to contain liquids or intended to contain solids that are loaded or discharged under pressure.

(2) An external visual inspection must be conducted initially after production and every 2.5 years starting from the date of manufacture on each intermediate bulk container to ensure that:

(i) The intermediate bulk container is marked in accordance with requirements in §178.703 of this subchapter. Missing or damaged markings, or

markings difficult to read must be restored or returned to original condition.

(ii) Service equipment is fully functional and free from damage which may cause failure. Missing, broken, or damaged parts must be repaired or replaced.

(iii) The intermediate bulk container, including the outer packaging if applicable, is free from damage which reduces its structural integrity. The intermediate bulk container must be externally inspected for cracks, warpage, corrosion or any other damage which might render the intermediate bulk container unsafe for transportation. An intermediate bulk container found with such defects must be removed from service. The inner receptacle of a composite intermediate bulk container must be removed from the outer intermediate bulk container body for inspection unless the inner receptacle is bonded to the outer body or unless the outer body is constructed in such a way (e.g., a welded or riveted cage) that removal of the inner receptacle is not possible without impairing the integrity of the outer body. Defective inner receptacles must be replaced with a receptacle meeting the design type of the intermediate bulk container or the entire intermediate bulk container must be replaced. For metal intermediate bulk containers, thermal insulation must be removed to the extent necessary for proper examination of the intermediate bulk container body.

(3) Each metal intermediate bulk container must be internally inspected at least every five years to ensure that the intermediate bulk container is free from damage which might reduce its structural integrity.

(i) The intermediate bulk container must be internally inspected for cracks, warpage, and corrosion or any other defect that might render the intermediate bulk container unsafe for transportation. An intermediate bulk container found with such defects must be removed from hazardous materials service until restored to the original design type of the intermediate bulk container.

(ii) Metal intermediate bulk containers must be inspected to ensure the minimum wall thickness requirements in § 178.705(c)(1)(iv)(A) of this subchapter are met. Metal intermediate bulk containers not conforming to minimum wall thickness requirements must be removed from hazardous materials service.

(c) *Initial visual inspection for flexible, fiberboard, or wooden intermediate bulk containers.* Each intermediate bulk container must be visually inspected prior to first use, by the person who places hazardous materials in the intermediate bulk container, to ensure that:

(1) The intermediate bulk container is marked in accordance with requirements in § 178.703 of this subchapter. Additional marking allowed for each design type may be present. Required markings that are missing, damaged or difficult to read must be restored or returned to original condition.

(2) Proper construction and design specifications have been met.

(i) Each flexible intermediate bulk container must be inspected to ensure that:

(A) Lifting straps if used, are securely fastened to the intermediate bulk container in accordance with the design type.

(B) Seams are free from defects in stitching, heat sealing or gluing which would render the intermediate bulk container unsafe for transportation of hazardous materials. All stitched seam-ends must be secure.

(C) Fabric used to construct the intermediate bulk container is free from cuts, tears and punctures. Additionally, fabric must be free from scoring which may render the intermediate bulk container unsafe for transport.

(ii) Each fiberboard intermediate bulk container must be inspected to ensure that:

(A) Fluting or corrugated fiberboard is firmly glued to facings.

(B) Seams are creased and free from scoring, cuts, and scratches.

(C) Joints are appropriately overlapped and glued, stitched, taped or stapled as prescribed by the design. Where staples are used, the joints must be inspected for protruding staple-ends which could puncture or abrade the inner liner. All such ends must be protected before the intermediate bulk

container is authorized for hazardous materials service.

(iii) Each wooden intermediate bulk container must be inspected to ensure that:

(A) End joints are secured in the manner prescribed by the design.

(B) Intermediate bulk container walls are free from defects in wood. Inner protrusions which could puncture or abrade the liner must be covered.

(d) *Retest date.* The date of the most recent periodic retest must be marked as provided in §178.703(b) of this subchapter.

(e) *Record retention.* The intermediate bulk container owner or lessee shall keep records of periodic retests and initial and periodic inspections. Records must include design types and packaging specifications, test and inspection dates, name and address of test and inspection facilities, names or name of any persons conducting tests or inspections, and test or inspection specifics and results. Records must be kept for each packaging at each location where periodic tests are conducted, until such tests are successfully performed again or for at least 2.5 years from the date of the last test. These records must be made available for inspection by a representative of the Department on request.

Subpart E—Qualification and Maintenance of Cargo Tanks

§180.401 Applicability.

This subpart prescribes requirements, in addition to those contained in parts 107, 171, 172, 173 and 178 of this subchapter, applicable to any person responsible for the continuing qualification, maintenance or periodic testing of a cargo tank.

[Amdt. 180–2, 54 FR 25032, June 12, 1989, as amended at 55 FR 37065, Sept. 7, 1990]

§180.403 Definitions.

In addition to the definitions contained in §§171.8 and 178.345–1 of this subchapter, the following definitions apply to this subpart:

Corrosive to the tank/valve means a lading meets the criteria for corrosivity specified in §173.136 of this subchapter, for the material of construction of the tank or valve; or the lading has been shown through experience to be corrosive to the tank or valve.

Modification means any change to the original design and construction of a cargo tank or a cargo tank motor vehicle which affects its structural integrity or lading retention capability. Any modification which involves welding on the cargo tank wall also must meet all requirements for ''Repair'' as defined in this section. Excluded from this category are the following:

(1) A change to motor vehicle equipment such as lights, truck or tractor power train components, steering and brake systems, and suspension parts, and changes to appurtenances, such as fender attachments, lighting brackets, ladder brackets; and

(2) Replacement of components such as valves, vents, and fittings with a component of a similar design and of the same size.

Owner means the person who owns a cargo tank motor vehicle used for the transportation of hazardous materials, or that person's authorized agent.

Rebarrelling means replacing more than 50 percent of the combined shell and head material of a cargo tank.

Repair means any welding on a cargo tank wall done to return a cargo tank or a cargo tank motor vehicle to its original design and construction specification, or to a condition prescribed for a later equivalent specification in effect at the time of the repair. Excluded from this category are the following:

(1) A change to motor vehicle equipment such as lights, truck or tractor power train components, steering and brake systems, and suspension parts, and changes to appurtenances, such as fender attachments, lighting brackets, ladder brackets; and

(2) Replacement of components such as valves, vents, and fittings with a component of a similar design and of the same size.

(3) Replacement of an appurtenance by welding to a mounting pad.

Replacement of a barrel means to replace the existing tank on a motor vehicle chassis with an unused (new) tank. For the definition of *tank,* see

§ 178.345–1(c), § 178.337–1, or § 178.338–1 of this subchapter, as applicable.

Stretching means any change in length, width or diameter of the cargo tank, or any change to a cargo tank motor vehicle's undercarriage that may affect the cargo tank's structural integrity.

[Amdt. 180–2, 54 FR 25032, June 12, 1989, as amended at 55 FR 37065, Sept. 7, 1990; Amdt. 180–3, 57 FR 45466, Oct. 1, 1992; Amdt. 180–7, 59 FR 55177, Nov. 3, 1994; 60 FR 17402, Apr. 5, 1995; Amdt. 180–10, 61 FR 51342, Oct. 1, 1996]

§ 180.405 Qualification of cargo tanks.

(a) *General.* Unless otherwise provided in this subpart, each cargo tank used for the transportation of hazardous material must be an authorized packaging.

(b) *Cargo tank specifications.* To qualify as an authorized packaging, each cargo tank must conform to this subpart, the applicable requirements specified in part 173 of this subchapter for the specific lading and, where a DOT specification cargo tank is required, an applicable specification in effect on the date the initial construction began: MC 300, MC 301, MC 302, MC 303, MC 304, MC 305, MC 306, MC 307, MC 310, MC 311, MC 312, MC 330, MC 331, MC 338, DOT 406, DOT 407, or DOT 412 (§ 178.337, § 178.338, § 178.345, § 178.346, § 178.347, § 178.348 of this subchapter). However, no cargo tank may be marked or certified after August 31, 1995, to the applicable MC 306, MC 307, MC 312, MC 331 or MC 338 specification in effect on December 30, 1990.

(c) *Cargo tank specifications no longer authorized for construction.* (1) A cargo tank made to a specification listed in Column 1 may be used when authorized in this part, provided the cargo tank was marked or certified before the date listed in Column 2:

Column 1	Column 2
MC 300	Sept. 2, 1967.
MC 301	June 12, 1961.
MC 302, MC 303, MC 304, MC 305, MC 310, MC 311.	Sept. 2, 1967.
MC 330	May 15, 1967.
MC 306, MC 307, MC 312	Sept. 1, 1995.

(2) A cargo tank of a specification listed in paragraph (c)(1) of this section may have its pressure relief devices and outlets modified as follows:

(i) A Specification MC 300, MC 301, MC 302, MC 303, or MC 305 cargo tank, to conform with a Specification MC 306 or DOT 406 cargo tank (See §§ 178.346–10 and 178.346–11 of this subchapter).

(ii) A Specification MC 306 cargo tank to conform to a Specification DOT 406 cargo tank (§§ 178.346–10 and 178.346–11 of this subchapter).

(iii) A Specification MC 304 cargo tank, to conform with a Specification MC 307 or DOT 407 cargo tank (See §§ 178.347–10 and 178.347–11 of this subchapter).

(iv) A Specification MC 307 cargo tank, to conform with a Specification DOT 407 cargo tank (See §§ 178.347–10 and 178.347–11 of this subchapter).

(v) A Specification MC 310 or MC 311 cargo tank, to conform with a Specification MC 312 or DOT 412 cargo tank (See §§ 178.348–10 and 178.348–11 of this subchapter).

(vi) A Specification MC 312 cargo tank, to conform with a Specification DOT 412 cargo tank (See §§ 178.348–10 and 178.348–11 of this subchapter).

(vii) A Specification MC 330 cargo tank, to conform with a Specification MC 331 cargo tank, except as specifically required by § 173.315 of this subchapter (see §§ 178.337–8 and 178.337–9 of this subchapter).

(d) *MC 338 cargo tank.* The owner of a cargo tank that conforms to and was used under the terms of an exemption issued before October 1, 1984, that authorizes the transportation of a cryogenic liquid shall remove the exemption number stenciled on the cargo tank and stamp the specification plate (or a plate placed adjacent to the specification plate) ''DOT MC 338'' followed by the exemption number, for example, ''DOT MC 338–E * * * *''. (Asterisks to be replaced by the exemption number). The cargo tank must be remarked prior to the expiration date of the exemption. During the period the cargo tank is in service, the owner of a cargo tank that is remarked in this manner must retain at its principal place of business a copy of the last exemption in effect. No new construction of cargo tanks pursuant to such exemption is authorized.

(1) The holding time must be determined, as required in § 178.338–9 of this subchapter, on each cargo tank or on

at least one cargo tank of each design. Any subsequent cargo tank manufactured to the same design type (see § 178.320), if not individually tested, must have the optional test regimen performed during the first shipment (see § 178.338–9 (b) and (c) of this subchapter).

(2) The holding time determined by test for one authorized cryogenic liquid may be used as the basis for establishing the holding time for other authorized cryogenic liquids.

(e) *MC 331 cargo tanks.* The owner of a MC 331 (§ 178.337 of this subchapter) cargo tank that conforms to and was used under an exemption issued before October 1, 1984, that authorizes the transportation of ethane, refrigerated liquid; ethane-propane mixture, refrigerated liquid; or hydrogen chloride, refrigerated liquid shall remove the exemption number stenciled on the cargo tank and stamp the exemption number on the specification plate (or a plate placed adjacent to the specification plate), immediately after the DOT Specification, for example, ''DOT MC 331–E * * * *''. (Asterisks to be replaced by the exemption number.) The cargo tank must be remarked prior to the expiration date of the exemption. During the period the cargo tank is in service, the owner of a cargo tank that is remarked in this manner must retain at the owner's principal place of business a copy of the last exemption in effect.

(f) *MC 306, MC 307, MC 312 cargo tanks.* Either a Registered Inspector or a Design Certifying Engineer and the owner of a MC 306, MC 307 or MC 312 cargo tank motor vehicle constructed in accordance with and used under an exemption issued before December 31, 1990, that authorizes a condition specified in this paragraph shall examine the cargo tank motor vehicle and its design to determine if it meets the requirements of the applicable MC 306, MC 307 or MC 312 specification in effect at the time of manufacture, except as specified herein.

(1) A cargo tank motor vehicle constructed after August 1, 1981, or the date specified in the applicable exemption, in conformance with the following conditions that apply, may be remarked and certified in accordance with paragraphs (f) (5) and (6) of this section:

(i) A vacuum-loaded cargo tank must have an ASME Code stamped specification plate marked with a minimum internal design pressure of 25 psig, and be designed for a minimum external design pressure of 15 psig.

(ii) An outlet equipped with a self-closing system which includes an external stop-valve must have the stop valve and associated piping protected within the vehicle's rear-end tank protection device, vehicle frame or an equally adequate accident damage protection device (See § 178.345–8 of this subchapter.) The self-closing system (See § 178.345–11 of this subchapter) must be equipped with a remotely actuated means of closure as follows:

(A) For a cargo tank used in other than corrosive service, the remote means of closure must be activated for closure by manual or mechanical means and, in case of fire, by an automatic heat activated means.

(B) For a cargo tank used in corrosive service, the remote means of closure may be actuated by manual or mechanical means only.

(iii) A cargo tank having an unreinforced portion of the shell exceeding 60 inches must have the circumferential reinforcement located so that the thickness and tensile strength of shell material in combination with the frame and circumferential reinforcement produces a structural integrity at least equal to that prescribed in § 178.345–3 of this subchapter or the specification in effect at time of manufacture.

(iv) A cargo tank having a projection from the tank shell or head that may contain lading in any tank position is authorized, provided such projection is as strong as the tank shell or head and is located within the motor vehicle's rear-end tank protection or other appropriate accident damage protection device.

(v) A cargo tank may be constructed of nickel, titanium, or other ASME sheet or plate materials in accordance with an exemption.

(2) A vacuum-loaded cargo tank constructed after August 1, 1981, or the date specified in the applicable exemption, in conformance with paragraph

(f)(1) of this section, except that an outlet equipped with an external valve which is not part of a self-closing system:

(i) Must be equipped with a self-closing system prior to September 1, 1993.

(ii) May be remarked and certified in accordance with paragraphs (f)(5) and (6) of this section after the cargo tank motor vehicle has been equipped with the self-closing system.

(3) A vacuum-loaded cargo tank constructed prior to August 1, 1981, in conformance with paragraph (f)(1) of this section, except for paragraph (f)(1)(i), may be remarked and certified in accordance with paragraphs (f) (5) and (6) of this section.

(4) A vacuum-loaded cargo tank constructed prior to August 1, 1981, in conformance with paragraph (f)(1) of this section, except for paragraph (f)(1)(i) of this section, and except that an outlet is equipped with an external valve which is not part of a self-closing system:

(i) Must be equipped with a self-closing system prior to September 1, 1993.

(ii) May be remarked and certified in accordance with paragraphs (f)(5) and (6) of this section after the cargo tank motor vehicle has been equipped with the self-closing system.

(5) The owner of a cargo tank for which a determination has been made that the cargo tank is in conformance with paragraph (f) (1), (2), (3), or (4) of this section shall complete a written certification, in English, signed by the owner and containing at least the following information:

(i) A statement certifying that each cargo tank conforms to § 180.405 (f) (1), (2), (3), or (4);

(ii) The applicable DOT exemption number, the applicable specification number and the owner's and manufacturer's serial number for the cargo tank;

(iii) A statement setting forth any modifications made to bring the cargo tank into conformance with § 180.405(f) (1), (2), (3), or (4), or the applicable specification;

(iv) A statement identifying the person certifying the cargo tank and the date of certification.

(6) The owner of a certified cargo tank shall remove the exemption number stenciled on the cargo tank and shall durably mark the specification plate (or a plate placed adjacent to the specification plate) ''MC +++–E ****####'' (where ''+++'' is to be replaced by the applicable specification number, ''* * * *'' by the exemption number and ''# # # #'' by the alloy.)

(7) During the period the cargo tank is in service, and for one year thereafter, the owner of a cargo tank that is certified and remarked in this manner must retain on file at its principal place of business a copy of the certificate and the last exemption in effect.

(g) *Cargo tank manhole assemblies.* (1) MC 306, MC 307, and MC 312 cargo tanks marked or certified after December 30, 1990, and DOT 406, DOT 407, and DOT 412 cargo tank motor vehicles must be equipped with manhole assemblies conforming with § 178.345–5 of this subchapter.

(2) On or before August 31, 1995, each owner of a cargo tank marked or certified before December 31, 1990, authorized for the transportation of a hazardous material, must have the cargo tank equipped with manhole assemblies conforming with § 178.345–5, except for the dimensional requirements in § 178.345–5(a), the hydrostatic testing requirements in § 178.345–5(b), and the marking requirements in § 178.345–5(e) of this subchapter. A manhole assembly meeting one of the following provisions is considered to be in compliance with this paragraph:

(i) Manhole assemblies on MC 300, MC 301, MC 302, MC 303, MC 305, MC 306, MC 310, MC 311 and MC 312 cargo tanks which are marked or certified in writing as conforming to § 178.345–5 of this subchapter or TTMA RP No. 61, or are tested and certified in accordance with TTMA TB No. 107.

(ii) Manhole assemblies on MC 304 and MC 307 cargo tanks.

(iii) Manhole assemblies on MC 310, MC 311, and MC 312 cargo tanks with a test pressure of 36 psig or greater.

(3) The owner of five or more DOT specification cargo tanks requiring retrofit or certification of the manhole closure must retrofit or certify at least 20 percent of the affected cargo tanks each year beginning in 1991 until all affected manhole closures on cargo tanks have been retrofitted or certified. The

owner of fewer than 5 DOT specification cargo tanks has until August 31, 1995 to retrofit or certify the manhole closures.

(h) *Pressure relief system.* Properly functioning reclosing pressure relief valves and frangible or fusible vents need not be replaced. However, replacement of reclosing pressure relief valves on MC-specification cargo tanks is authorized subject to the following requirements:

(1) Until August 31, 1998, the owner of a cargo tank may replace a reclosing pressure relief device with a device which is in compliance with the requirements for pressure relief devices in effect at the time the cargo tank specification became superseded. If the pressure relief device is installed as an integral part of a manhole cover assembly, the manhole cover must comply with the requirements of paragraph (g) of this section.

(2) After August 31, 1998, replacement for any reclosing pressure relief valve must be capable of reseating to a leak-tight condition after a pressure surge, and the volume of lading released may not exceed one liter. Specific performance requirements for these pressure relief valves are set forth in §178.345–10(b)(3) of this subchapter.

(3) As provided in paragraph (c)(2) of this section, the owner of a cargo tank may elect to modify reclosing pressure relief devices to more recent cargo tank specifications. However, replacement devices constructed to the requirements of §178.345–10 of this subchapter must provide the minimum venting capacity required by the original specification to which the cargo tank was designed and constructed.

(i) *Flammable cryogenic liquids.* Each cargo tank used to transport a flammable cryogenic liquid must be examined after each shipment to determine its actual holding time (See §173.318(g)(3) of this subchapter.)

(j) *Withdrawal of certification.* A specification cargo tank that for any reason no longer meets the applicable specification may not be used to transport hazardous materials unless the cargo tank is repaired and retested in accordance with §§180.413 and 180.407 prior to being returned to hazardous materials service. If the cargo tank is not in conformance with the applicable specification requirements, the specification plate on the cargo tank must be removed, obliterated or securely covered. The details of the conditions necessitating withdrawal of the certification must be recorded and signed on the written certificate for that cargo tank. The vehicle owner shall retain the certificate for at least 1 year after withdrawal of the certification.

(k) *DOT specification cargo tank with no marked design pressure or a marked design pressure of less than 3 psig.* The owner of an MC 300, MC 301, MC 302, MC 303, MC 305, MC 306 or MC 312 cargo tank, which has a pressure relief system set at 3 psig, may mark or remark the cargo tank with an MAWP or design pressure of not greater than 3 psig.

(l) *MC 300, MC 301, MC 302, MC 303, MC 305, MC 306 cargo tank—Rear accident damage protection.* (1) Notwithstanding the requirements in §180.405(b), the applicable specification requirement for a rear bumper or rear-end tank protection device on MC 300, MC 301, MC 302, MC 303, MC 305, and MC 306 cargo tanks does not apply to a cargo tank truck (power unit) until July 1, 1992, if the cargo tank truck—

(i) Was manufactured before July 1, 1989;

(ii) Is used to transport gasoline or any other petroleum distillate product; and

(iii) Is operated in combination with a cargo tank full trailer. However, an empty cargo tank truck, without a cargo tank full trailer attached, may be operated without the required rear bumper or rear-end tank protection device on a one-time basis while being transported to a repair facility for installation of a rear bumper or rear-end protection device.

(2) Each cargo tank shall be provided with a rear accident damage protection device to protect the tank and piping in the event of a rear-end collision and reduce the likelihood of damage which could result in the loss of lading. The rear-end protection device must be in the form of a rear-end tank protection device meeting the requirements of §178.345–8(d) or a rear bumper meeting the following:

(i) The bumper shall be located at least 6 inches to the rear of any vehicle

component used for loading or unloading or that may contain lading while the vehicle is in transit.

(ii) The dimensions of the bumper shall conform to § 393.86 of this title.

(iii) The structure of the bumper shall be designed to withstand, without leakage of lading, the impact of the vehicle with rated payload, at a deceleration of 2 ''g'' using a safety factor of two based on the ultimate strength of the bumper material. Such impact shall be considered uniformly distributed and applied horizontally (parallel to the ground) from any direction at an angle not exceeding 30 degrees to the longitudinal axis of the vehicle.

[Amdt. 180–2, 54 FR 25032, June 12, 1989, as amended at 55 FR 21038, May 22, 1990; 55 FR 37066, Sept. 7, 1990; 56 FR 27877, 27878, June 17, 1991; Amdt. 180–3, 57 FR 45466, Oct. 1, 1992; 58 FR 12905, Mar. 8, 1993; Amdt. 180–4, 58 FR 51534, Oct. 1, 1993; Amdt. 180–2, 59 FR 1786, Jan. 12, 1994; Amdt. 180–6, 59 FR 49135, Sept. 26, 1994; Amdt. 180–7, 59 FR 55177, Nov. 3, 1994]

§ 180.407 Requirements for test and inspection of specification cargo tanks.

(a) *General.* (1) A cargo tank constructed in accordance with a DOT specification for which a test or inspection specified in this section has become due, may not be filled and offered for transportation or transported until the test or inspection has been successfully completed. This paragraph does not apply to any cargo tank filled prior to the test or inspection due date.

(2) Except during a pressure test or during loading or unloading, a cargo tank may not be subjected to a pressure greater than its design pressure or MAWP.

(3) A person witnessing or performing a test or inspection specified in this section must meet the minimum qualifications prescribed in § 180.409.

(4) Each cargo tank must be evaluated in accordance with the acceptable results of tests and inspections prescribed in § 180.411.

(5) Each cargo tank which has successfully passed a test or inspection specified in this section must be marked in accordance with § 180.415.

(6) A cargo tank which fails a prescribed test or inspection must:

(i) Be repaired and retested in accordance with § 180.413; or

(ii) Be removed from hazardous materials service and the specification plate removed, obliterated or covered in a secure manner.

(b) *Conditions requiring test and inspection of cargo tanks.* Without regard to any other test or inspection requirements, a specification cargo tank must be tested and inspected in accordance with this section prior to further use if:

(1) The cargo tank shows evidence of bad dents, corroded or abraded areas, leakage, or any other condition that might render it unsafe for transportation service.

(2) The cargo tank has been in an accident and has been damaged to an extent that may adversely affect its lading retention capability.

(3) The cargo tank has been out of hazardous materials transportation service for a period of one year or more. Each cargo tank that has been out of hazardous materials transportation service for a period of one year or more must be pressure tested in accordance with § 180.407(g) prior to further use.

(4) The cargo tank has been modified from its original design specification.

(5) The Department so requires based on the existence of probable cause that the cargo tank is in an unsafe operating condition.

(c) *Periodic test and inspection.* Each specification cargo tank must be tested and inspected as specified in the following table by an inspector meeting the qualifications in § 180.409.

COMPLIANCE DATES—INSPECTIONS AND TEST UNDER § 180.407(C)

Test or inspection (cargo tank specification, configuration, and service)	Date by which first test must be completed (see note 1)	Interval period after first test
External Visual Inspection:		
All cargo tanks designed to be loaded by vacuum with full opening rear heads.	September 1, 1991	6 months.
All other cargo tanks	September 1, 1991	1 year.
Internal Visual Inspection:		
All insulated cargo tanks, except MC 330, MC 331, MC 338	September 1, 1991	1 year.

COMPLIANCE DATES—INSPECTIONS AND TEST UNDER § 180.407(C)—Continued

Test or inspection (cargo tank specification, configuration, and service)	Date by which first test must be completed (see note 1)	Interval period after first test
All cargo tanks transporting lading corrosive to the tank	September 1, 1991	1 year.
All other cargo tanks, except MC 338	September 1, 1995	5 years.
Lining Inspection:		
All lined cargo tanks transporting lading corrosive to the tank	September 1, 1991	1 year.
Leakage Test:		
MC 330 and MC 331 cargo tanks in chlorine service	September 1, 1991	2 years.
All other cargo tanks except MC 338	September 1, 1991	1 year.
Pressure Test:		
(Hydrostatic or pneumatic) (See Notes 2 and 3)		
All cargo tanks which are insulated with no manhole or insulated and lined, except MC 338.	September 1, 1991	1 year.
All cargo tanks designed to be loaded by vacuum with full opening rear heads.	September 1, 1992	2 years.
MC 330 and MC 331 cargo tanks in chlorine service	September 1, 1992	2 years.
All other cargo tanks	September 1, 1995	5 years.
Thickness Test:		
All unlined cargo tanks transporting material corrosive to the tank, except MC 338.	September 1, 1992	2 years.

Note 1: If a cargo tank is subject to an applicable inspection or test requirement under the regulations in effect on December 30, 1990, and the due date (as specified by a requirement in effect on December 30, 1990) for completing the required inspection or test occurs before the compliance date listed in Table I, the earlier date applies.

Note 2: Pressure testing is not required for MC 330 and MC 331 cargo tanks in dedicated sodium metal service.

Note 3: Pressure testing is not required for uninsulated lined cargo tanks, with a design pressure or MAWP 15 psig or less, which receive an external visual inspection and lining inspection at least once each year.

(d) *External visual inspection and testing.* (1) Where insulation precludes external visual inspection, the cargo tank, other than an MC 330 or MC 331 cargo tank, must be given a visual internal inspection in accordance with § 180.407(e). The tank must be hydrostatically or pneumatically tested in accordance with § 180.407(c) and (g) where:

(i) Visual inspection is precluded by internal lining or coating, or

(ii) The cargo tank is not equipped with a manhole or inspection opening.

(2) The external visual inspection and testing must include as a minimum the following:

(i) The tank shell and heads must be inspected for corroded or abraded areas, dents, distortions, defects in welds and any other conditions, including leakage, that might render the tank unsafe for transportation service;

(ii) The piping, valves, and gaskets must be carefully inspected for corroded areas, defects in welds, and other conditions, including leakage, that might render the tank unsafe for transportation service;

(iii) All devices for tightening manhole covers must be operative and there must be no evidence of leakage at manhole covers or gaskets;

(iv) All emergency devices and valves including self-closing stop valves, excess flow valves and remote closure devices must be free from corrosion, distortion, erosion and any external damage that will prevent safe operation. Remote closure devices and self-closing stop valves must be functioned to demonstrate proper operation;

(v) Missing bolts, nuts and fusible links or elements must be replaced, and loose bolts and nuts must be tightened;

(vi) All markings on the cargo tank required by parts 172, 178 and 180 of this subchapter must be legible;

(vii) [Reserved]

(viii) All major appurtenances and structural attachments on the cargo tank including, but not limited to, suspension system attachments, connecting structures, and those elements of the upper coupler (fifth wheel) assembly that can be inspected without dismantling the upper coupler (fifth wheel) assembly must be inspected for any corrosion or damage which might prevent safe operation;

(ix) For cargo tanks transporting lading corrosive to the tank, areas covered by the upper coupler (fifth wheel) assembly must be inspected at least

once in each two year period for corroded and abraded areas, dents, distortions, defects in welds, and any other condition that might render the tank unsafe for transportation service. The upper coupler (fifth wheel) assembly must be removed from the cargo tank for this inspection.

(3) All reclosing pressure relief valves must be externally inspected for any corrosion or damage which might prevent safe operation. All reclosing pressure relief valves on cargo tanks carrying lading corrosive to the valve must be removed from the cargo tank for inspection and testing. Each reclosing pressure relief valve required to be removed and tested must open at the required set pressure and reseat to a leak-tight condition at 90 percent of the set-to-discharge pressure or the pressure prescribed for the applicable cargo tank specification.

(4) Corroded or abraded areas of the cargo tank wall must be thickness tested in accordance with the procedures set forth in paragraphs (i)(2), (i)(3), (i)(5) and (i)(6) of this section.

(5) The gaskets on any full opening rear head must be:

(i) Visually inspected for cracks or splits caused by weather or wear; and

(ii) Replaced if cuts or cracks which are likely to cause leakage, or are of a depth one-half inch or more, are found.

(6) The inspector must record the results of the external visual examination as specified in § 180.417(b).

(e) *Internal visual inspection.* (1) When the cargo tank is not equipped with a manhole or inspection opening, or the cargo tank design precludes an internal inspection, the tank shall be hydrostatically or pneumatically tested in accordance with 180.407(c) and (g).

(2) The internal visual inspection must include as a minimum the following:

(i) The tank shell and heads must be inspected for corroded and abraded areas, dents, distortions, defects in welds, and any other condition that might render the tank unsafe for transportation service.

(ii) Tank liners must be inspected as specified in § 180.407(f).

(3) Corroded or abraded areas of the cargo tank wall must be thickness tested in accordance with paragraphs (i)(2), (i)(3), (i)(5) and (i)(6) of this section.

(4) The inspector must record the results of the internal visual inspection as specified in § 180.417(b).

(f) *Lining inspection.* The integrity of the lining on all lined cargo tanks, when lining is required by this subchapter, must be verified at least once each year as follows:

(1) Rubber (elastomeric) lining must be tested for holes as follows:

(i) Equipment must consist of:

(A) A high frequency spark tester capable of producing sufficient voltage to ensure proper calibration;

(B) A probe with an ''L'' shaped 2.4 mm (0.09 inch) diameter wire with up to a 30.5 cm (12-inch) bottom leg (end bent to a 12.7 mm (0.5 inch) radius), or equally sensitive probe; and

(C) A steel calibration coupon 30.5 cm × 30.5 cm (12 inches × 12 inches) covered with the same material and thickness as that to be tested. The material on the coupon shall have a test hole to the metal substrate made by puncturing the material with a 22 gauge hypodermic needle or comparable piercing tool.

(ii) The probe must be passed over the surface of the calibration coupon in a constant uninterrupted manner until the hole is found. The hole is detected by the white or light blue spark formed. (A sound lining causes a dark blue or purple spark.) The voltage must be adjusted to the lowest setting that will produce a minimum 12.7 mm (0.5 inch) spark measured from the top of the lining to the probe. To assure that the setting on the probe has not changed, the spark tester must be calibrated periodically using the test calibration coupon, and the same power source, probe, and cable length.

(iii) After calibration, the probe must be passed over the lining in an uninterrupted stroke.

(iv) Holes that are found must be repaired using equipment and procedures prescribed by the lining manufacturer or lining installer.

(2) Linings made of other than rubber (elastomeric material) must be tested using equipment and procedures prescribed by the lining manufacturer or lining installer.

(3) Degraded or defective areas of the cargo tank liner must be removed and the cargo tank wall below the defect must be inspected. Corroded areas of the tank wall must be thickness tested in accordance with paragraphs (i)(2), (i)(3), (i)(5) and (i)(6) of this section.

(4) The inspector must record the results of the lining inspection as specified in § 180.417(b).

(g) *Pressure test.* All components of the cargo tank wall, as defined in § 178.320(a) of this subchapter, must be pressure tested as prescribed by this paragraph.

(1) *Test Procedure*—(i) As part of the pressure test, the inspector must perform an external and internal visual inspection, except that on an MC 338 cargo tank, or a cargo tank not equipped with a manhole or inspection opening, an internal inspection is not required.

(ii) All reclosing pressure relief valves must be:

(A) Removed from the cargo tank for inspection and testing. Each reclosing pressure relief valve must open at the required set pressure and reseat to a leak-tight condition at 90 percent of the set-to-discharge pressure or the pressure prescribed for the applicable cargo tank specification; or,

(B) Replaced.

(iii) Except for cargo tanks carrying lading corrosive to the tank, areas covered by the upper coupler (fifth wheel) assembly must be inspected for corroded and abraded areas, dents, distortions, defects in welds, and any other condition that might render the tank unsafe for transportation service. The upper coupler (fifth wheel) assembly must be removed from the cargo tank for this inspection.

(iv) Each cargo tank must be tested hydrostatically or pneumatically to the internal pressure specified in the following table:

Specification	Test pressure
MC 300, 301, 302, 303, 305, 306.	20.7 kPa (3 psig) or design pressure, whichever is greater.
MC 304, 307.	275.8 kPa (40 psig) or 1.5 times the design pressure, whichever is greater.
MC 310, 311, 312.	20.7 kPa (3 psig) or 1.5 times the design pressure, whichever is greater.
MC 330, 331.	1.5 times either the MAWP or the re-rated pressure, whichever is applicable.
MC 338.	1.25 times either the MAWP or the re-rated pressure, whichever is applicable.
DOT 406.	34.5 kPa (5 psig) or 1.5 times the MAWP, whichever is greater.
DOT 407.	275.8 kPa (40 psig) or 1.5 times the MAWP, whichever is greater.
DOT 412.	1.5 times the MAWP.

(v) Each owner of 5 or more MC 300, MC 301, MC 302, MC 303, MC 304, MC 305, MC 306, MC 307, MC 310, MC 311, or MC 312 cargo tanks must pressure test at least 20 percent of the cargo tanks in his ownership each year beginning in 1991. The owner of fewer than five MC specification cargo tanks has until August 31, 1995, to pressure test these units.

(vi) Each cargo tank of a multi-tank cargo tank motor vehicle must be tested with the adjacent cargo tanks empty and at atmospheric pressure.

(vii) All closures except pressure relief devices must be in place during the test. All prescribed loading and unloading venting devices rated at less than test pressure may be removed during the test. If retained, the devices must be rendered inoperative by clamps, plugs, or other equally effective restraining devices. Restraining devices may not prevent detection of leaks or damage the venting devices and must be removed immediately after the test is completed.

(viii) *Hydrostatic test method.* Each cargo tank, including its domes, must be filled with water or other liquid having similar viscosity, at a temperature not exceeding 100 °F. The cargo tank must then be pressurized to not less than the pressure specified in paragraph (g)(1)(iv) of this section. The cargo tank, including its closures, must hold the prescribed test pressure for at least 10 minutes during which time it shall be inspected for leakage, bulging or any other defect.

(ix) *Pneumatic test method.* Pneumatic testing may involve higher risk than

hydrostatic testing. Therefore, suitable safeguards must be provided to protect personnel and facilities should failure occur during the test. The cargo tank must be pressurized with air or an inert gas. The pneumatic test pressure in the cargo tank must be reached by gradually increasing the pressure to one-half of the test pressure. Thereafter, the pressure must be increased in steps of approximately one-tenth of the test pressure until the required test pressure has been reached. The test pressure must be held for at least 5 minutes. The pressure must then be reduced to the MAWP, which must be maintained during the time the entire cargo tank surface is inspected. During the inspection, a suitable method must be used for detecting the existence of leaks. This method must consist either of coating the entire surface of all joints under pressure with a solution of soap and water, or using other equally sensitive methods.

(2) When testing an insulated cargo tank, the insulation and jacketing need not be removed unless it is otherwise impossible to reach test pressure and maintain a condition of pressure equilibrium after test pressure is reached, or the vacuum integrity cannot be maintained in the insulation space. If an MC 338 cargo tank used for the transportation of a flammable gas or oxygen, refrigerated liquid is opened for any reason, the cleanliness must be verified prior to closure using the procedures contained in § 178.338–15 of this subchapter.

(3) Each MC 330 and MC 331 cargo tank constructed of quenched and tempered steel (Part UHT of the ASME Code), or constructed of other than quenched and tempered steel but without postweld heat treatment, used for the transportation of anhydrous ammonia, or any other hazardous materials that may cause corrosion stress cracking, must be internally inspected by the wet fluorescent magnetic particle method immediately prior to and in conjunction with the performance of the pressure test prescribed in this section. Each MC 330 and MC 331 cargo tank constructed of quenched and tempered steel (Part UHT of the ASME Code) used for the transportation of liquefied petroleum gas must be internally inspected by the wet fluorescent magnetic particle method immediately prior to and in conjunction with the performance of the pressure test prescribed in this section. The wet fluorescent magnetic particle inspection must be in accordance with Section V of the ASME Code and CGA Technical Bulletin TB–2. This paragraph does not apply to cargo tanks that do not have manholes. (See § 180.417(c) for reporting requirements.)

(4) All pressure bearing portions of a cargo tank heating system employing a medium such as, but not limited to, steam or hot water for heating the lading must be hydrostatically pressure tested at least once every 5 years. The test pressure must be at least 1.5 times the heating system design pressure and must be maintained for five minutes. A heating system employing flues for heating the lading must be tested to ensure against lading leakage into the flues or into the atmosphere.

(5) *Exceptions.* (i) Pressure testing is not required for MC 330 and MC 331 cargo tanks in dedicated sodium metal service.

(ii) Pressure testing is not required for uninsulated lined cargo tanks, with a design pressure or MAWP of 15 psig or less, which receive an external visual inspection and a lining inspection at least once each year.

(6) *Acceptance criteria.* A cargo tank that leaks, fails to retain test pressure or pneumatic inspection pressure, shows distortion, excessive permanent expansion, or other evidence of weakness that might render the cargo tank unsafe for transportation service, may not be returned to service, except as follows: A cargo tank with a heating system which does not hold pressure may remain in service as an unheated cargo tank if:

(i) The heating system remains in place and is structurally sound and no lading may leak into the heating system, and

(ii) The specification plate heating system information is changed to indicate that the cargo tank has no working heating system.

(7) The inspector must record the results of the pressure test as specified in § 180.417(b).

(h) *Leakage test.* (1) Each cargo tank must be tested for leaks in accordance with § 180.407(c). The leakage test must include product piping with all valves and accessories in place and operative, except that any venting devices set to discharge at less than the leakage test pressure must be removed or rendered inoperative during the test. Test pressure must be maintained at least 5 minutes. Suitable safeguards must be provided to protect personnel should a failure occur. MC 330 and MC 331 cargo tanks may be leakage tested with the hazardous materials contained in the tank during the test. Leakage test pressure must be not less than 80 percent of the tank design pressure or MAWP, whichever is marked on the certification or specification plate, except as follows:

(i) A cargo tank with an MAWP of 690 kPa (100 psig) or more may be leakage tested at its maximum normal operating pressure provided it is in dedicated service or services; or

(ii) An MC 330 or MC 331 cargo tank in dedicated liquified petroleum gas service may be leakage tested at not less than 414 kPa (60 psig).

(2) Cargo tanks equipped with vapor collection equipment may be leakage tested in accordance with the Environmental Protection Agency's ''Method 27—Determination of Vapor Tightness of Gasoline Delivery Tank Using Pressure-Vacuum Test,'' as set forth in 40 CFR Part 60, Appendix A. Acceptance criteria are found at 40 CFR 60.501.

(3) A cargo tank that fails to retain leakage test pressure may not be returned to service as a specification cargo tank, except under conditions specified in § 180.411(d).

(4) The inspector must record the results of the leakage test as specified in § 180.417(b).

(i) *Thickness testing.* (1) The shell and head thickness of all unlined cargo tanks used for the transportation of materials corrosive to the tank must be measured at least once every 2 years, except that cargo tanks measuring less than the sum of the minimum prescribed thickness, plus one-fifth of the original corrosion allowance, must be tested annually.

(2) Measurements must be made using a device capable of accurately measuring thickness to within +/− 0.002 of an inch.

(3) Any person performing thickness testing must be trained in the proper use of the thickness testing device used in accordance with the manufacturer's instruction.

(4) Thickness testing must be performed in the following areas of the cargo tank wall, as a minimum:

(i) Areas of the tank shell and heads and shell and head area around any piping that retains lading;

(ii) Areas of high shell stress such as the bottom center of the tank;

(iii) Areas near openings;

(iv) Areas around weld joints;

(v) Areas around shell reinforcements;

(vi) Areas around appurtenance attachments;

(vii) Areas near upper coupler (fifth wheel) assembly attachments;

(viii) Areas near suspension system attachments and connecting structures;

(ix) Known thin areas in the tank shell and nominal liquid level lines; and

(x) Connecting structures joining multiple cargo tanks of carbon steel in a self-supporting cargo tank motor vehicle.

(5) Minimum thicknesses for MC 300, MC 301, MC 302, MC 303, MC 304, MC 305, MC 306, MC 307, MC 310, MC 311, and MC 312 cargo tanks are shown in the tables below. The columns headed ''Specified Manufactured Thickness'' tabulate the minimum values required for new construction, generally found in Tables I and II of each specification. ''In-Service Minimum Thicknesses'' are based on 90 percent of the manufactured thickness as specified in the DOT specification, rounded to three places.

TABLE I.—MINIMUM THICKNESS FOR MC 300, MC 303, MC 304, MC 306, MC 307, MC 310, MC 311 AND MC 312 SPECIFICATION CARGO TANKS CONSTRUCTED OF STEEL AND STEEL ALLOYS

Specified manufactured thickness (US gauge or inches)	Nominal decimal equivalent for reference (inches)	In-service minimum thickness (inches)
19	0.0418	0.038
18	0.0478	0.043
17	0.0538	0.048

TABLE I.—MINIMUM THICKNESS FOR MC 300, MC 303, MC 304, MC 306, MC 307, MC 310, MC 311 AND MC 312 SPECIFICATION CARGO TANKS CONSTRUCTED OF STEEL AND STEEL ALLOYS—Continued

Specified manufactured thickness (US gauge or inches)	Nominal decimal equivalent for reference (inches)	In-service minimum thickness (inches)
16	0.0598	0.054
15	0.0673	0.061
14	0.0747	0.067
13	0.0897	0.081
12	0.1046	0.094
11	0.1196	0.108
10	0.1345	0.121
9	0.1495	0.135
8	0.1644	0.148
7	0.1793	0.161
3/16	0.1875	0.169
1/4	0.2500	0.225
5/16	0.3125	0.281
3/8	0.3750	0.338

TABLE II.—MINIMUM THICKNESS FOR MC 301, MC 302, MC 304, MC 305, MC 306, MC 307, MC 311 AND MC 312 SPECIFICATION CARGO TANKS CONSTRUCTED OF ALUMINUM AND ALUMINUM ALLOYS

Specified manufactured thickness (inches)	In-service minimum thickness (inches)
0.078	0.070
0.087	0.078
0.096	0.086
0.109	0.098
0.130	0.117
0.141	0.127
0.151	0.136
0.172	0.155
0.173	0.156
0.194	0.175
0.216	0.194
0.237	0.213
0.270	0.243
0.360	0.324
0.450	0.405
0.540	0.486

(6) An owner of a cargo tank that no longer conforms with the minimum thickness prescribed for the maximum lading density marked on the specification plate may use the cargo tank to carry lading of lower density under the following conditions:

(i) A Design Certifying Engineer must certify that the cargo tank design and thickness is appropriate for the lower density lading, by issuance of a new manufacturer's certificate, and

(ii)The tank's nameplate must be changed to reflect the new service limits (maximum density of lading).

(7) An owner of a cargo tank that no longer conforms with the minimum thickness prescribed for the specification may not return the cargo tank to hazardous materials service. The tank's specification plate must be removed, obliterated or covered in a secure manner.

(8) The inspector must record the results of the thickness test as specified in § 180.417(b).

[Amdt. 180–2, 54 FR 25032, June 12, 1989, as amended at 55 FR 21038, May 22, 1990; 55 FR 37067, Sept. 7, 1990; 56 FR 27878, June 17, 1991; Amdt 180–3, 57 FR 45466, Oct. 1, 1992; Amdt. 180–4, 58 FR 51534, Oct. 1, 1993; Amdt. 180–6, 59 FR 49135, Sept. 26, 1994; Amdt. 180–7, 59 FR 55177, 55178, Nov. 3, 1994; 60 FR 17402, Apr. 5, 1995; Amdt. 180–9, 61 FR 27176, May 30, 1996; Amdt. 180–10, 61 FR 51342, Oct. 1, 1996]

§ 180.409 Minimum qualifications for inspectors and testers.

(a) Except as otherwise provided in this section, any person performing or witnessing the inspections and tests specified in § 180.407(c) must—

(1) Be registered with the Department in accordance with part 107, subpart F of this chapter, and

(2) Be familiar with DOT specification cargo tanks and must be trained and experienced in use of the inspection and testing equipment needed.

(b) A person who only performs annual external visual inspections and leakage tests on a cargo tank motor vehicle, owned or operated by that person, with a capacity of less than 13,250 liters (3,500 gallons) used exclusively for flammable liquid petroleum fuels, is not required to meet the educational and years of experience requirements set forth in the definition of ''Registered Inspector'' in § 171.8 of this subchapter. Although not required to meet the educational and years of experience requirements, a person who performs visual inspections or leakage tests or signs the inspection reports must have the knowledge and ability to perform such inspections and tests and must perform them as required by this subchapter, and must register with the Department as required by subpart F of part 107 of this chapter.

(c) A person who performs only annual external visual inspections and leakage tests on a permanently mounted non-bulk tank, owned or operated by that person, for petroleum products as authorized by § 173.8(c) of this subchapter, is not required to be registered in accordance with subpart F of part 107 of this chapter. In addition the person who signs the inspection report required by § 180.417(b) of this subpart for such non-bulk tanks is not required to be registered. Although not required to register, a person who performs visual inspections or leakage tests or signs the inspection reports must have the knowledge and ability to perform such inspections and tests and must perform them as required by this subchapter.

(d) A motor carrier or cargo tank owner who meets the requirements of paragraph (a) of this section may use an employee who is not a Registered Inspector to perform a portion of the pressure retest required by § 180.407(g). External and internal visual inspections must be accomplished by a Registered Inspector, but the hydrostatic or pneumatic pressure test, as set forth in § 180.407(g)(1)(viii) and (ix), respectively, may be done by an employee who is not a Registered Inspector provided that—

(1) The employee is familiar with the cargo tank and is trained and experienced in the use of the inspection and testing equipment used;

(2) The employer submits certification that such employee meets the qualification requirements to the Associate Administrator for Hazardous Materials Safety, Attn: (DHM–32), Research and Special Programs Administration, Department of Transportation, 400 Seventh Street, SW., Washington, DC 20590; and

(3) The employer retains a copy of the tester's qualifications with the documents required by § 180.417(b).

[Amdt. 180–2, 55 FR 37069, Sept. 7, 1990, as amended by Amdt. 180–3, 56 FR 66287, Dec. 20, 1991; 57 FR 45466, Oct. 1, 1992; Amdt. 180–11, 62 FR 1217, Jan. 8, 1997]

§ 180.411 Acceptable results of tests and inspections.

(a) *Corroded or abraded areas.* The minimum thickness may not be less than that prescribed in the applicable specification.

(b) *Dents, cuts, digs and gouges.* (See CGA Pamphlet C–6 for evaluation procedures.)

(1) For dents at welds or that include a weld, the maximum allowable depth is ½ inch. For dents away from welds, the maximum allowable depth is 1/10 of the greatest dimension of the dent, but in no case may the depth exceed one inch.

(2) The minimum thickness remaining beneath a cut, dig, or gouge may not be less than that prescribed in the applicable specification.

(c) *Weld or structural defects.* Any cargo tank with a weld defect such as a crack, pinhole, or incomplete fusion, or a structural defect must be taken out of hazardous materials service until repaired.

(d) *Leakage.* All sources of leakage must be properly repaired prior to returning a tank to hazardous materials service.

(e) *Relief valves.* Any pressure relief valve that fails to open and reclose at the prescribed pressure must be repaired or replaced.

(f) *Liner integrity.* Any defect shown by the test must be properly repaired.

(g) *Pressure test.* Any tank that fails to meet the acceptance criteria found in the individual specification that applies must be properly repaired.

§ 180.413 Repair, modification, stretching, or rebarrelling of cargo tanks.

(a) *General.* For purposes of this section, ''stretching'' is not considered a ''modification'' and ''rebarrelling'' is not considered a ''repair.'' Any repair, modification, stretching, or rebarrelling of a cargo tank must be performed in conformance with the requirements of this section.

(b) *Repair*—(1) *Non-ASME Code stamped cargo tanks.* Any work involving repair on an MC 300, MC 301, MC 302, MC 303, MC 304, MC 305, MC 306, MC 307, MC 310, MC 311, or MC 312 cargo tank that is not ASME Code stamped must be performed by:

(i) A cargo tank manufacturer holding a valid ASME Certificate of Authorization for the use of the ASME ''U'' stamp and registered with DOT; or

(ii) A repair facility holding a valid National Board Certificate of Authorization for the use of the National Board ''R'' stamp and registered with DOT.

(2) *ASME Code stamped cargo tanks.* Any work involving repair on any ASME Code stamped cargo tank must be performed by a repair facility holding a valid National Board Certificate of Authorization for the use of the National Board ''R'' stamp and registered in accordance with subpart F of part 107 of subchapter B of this chapter.

(3) The following provisions apply to cargo tank repairs:

(i) DOT 406, DOT 407, and DOT 412 cargo tanks must be repaired in accordance with the specification requirements in effect either at the time of manufacture or at the time of repair;

(ii) MC 300, MC 301, MC 302, MC 303, MC 305, and MC 306 cargo tanks must be repaired in accordance with either the original specification or with the DOT 406 specification in effect at the time of repair;

(iii) MC 304 and MC 307 cargo tanks must be repaired in accordance with either the original specification or with the DOT 407 specification in effect at the time of repair;

(iv) MC 310, MC 311, and MC 312 cargo tanks must be repaired in accordance with either the original specification or with the DOT 412 specification in effect at the time of the repair;

(v) MC 338 cargo tanks must be repaired in accordance with the specification requirements in effect either at the time of manufacture or at the time of repair; and

(vi) MC 330 and MC 331 cargo tanks must be repaired in accordance with the repair procedures described in CGA Technical Bulletin TB–2 and the National Board Inspection Code—Provisions for Repair of Pressure Vessels. Each cargo tank having cracks or other defects requiring welded repairs must meet all of the requirements of § 178.337–16 of this subchapter (in effect at the time of the repair), except that postweld heat treatment after minor weld repairs is not required. When any repair is made of defects revealed by the wet fluorescent magnetic particle inspection, including those by grinding, the affected area of the cargo tank must again be examined by the wet fluorescent magnetic particle method after hydrostatic testing to assure that all defects have been removed.

(4) Prior to any repair work, the cargo tank must be emptied of any hazardous material lading. Cargo tanks containing flammable or toxic lading must be purged.

(5) Any repair of a cargo tank involving welding on the shell or head must be certified by a Registered Inspector. Any repair of an ASME Code ''U'' stamped cargo tank must be in accordance with the National Board Inspection Code.

(6) The suitability of any repair affecting the structural integrity of the cargo tank must be determined by the testing required either in the applicable manufacturing specification, or in § 180.407(g)(1)(iv).

(c) *Maintenance or replacement of piping, valves, hoses or fittings.* In the event of repair, maintenance or replacement, any piping, valve, or fitting must be properly installed in accordance with the provisions of the applicable specification before the cargo tank is returned to hazardous materials service. After maintenance or replacement which does not involve welding on the cargo tank wall, the repaired piping, valves or fittings, the replaced segment of the piping must be leak tested. After repair or replacement of piping, valves or fittings which involves welding on the cargo tank wall, the entire cargo tank, including the repaired or replaced piping, valve or fitting, must be pressure tested in accordance with the applicable specification. Hoses permanently attached to the cargo tank must be tested either before or after installation.

(d) *Modification, stretching, or rebarrelling.* Modification, stretching or rebarrelling of a cargo tank must conform to the following provisions:

(1) *Non-ASME Code stamped cargo tanks.* If the modification, stretching, or rebarrelling will result in a design type change, then it must be approved by a Design Certifying Engineer. Any work involving modification, stretching, or rebarrelling on an MC 300, MC 301, MC 302, MC 303, MC 304, MC 305, MC 306, MC 307, MC 310, MC 311, or MC 312

cargo tank that is not ASME stamped must be performed by:

(i) A cargo tank manufacturer holding a valid ASME Certificate of Authorization for the use of the ASME ''U'' stamp and registered with DOT; or

(ii) A repair facility holding a valid National Board Certificate of Authorization for the use of the National Board ''R'' stamp and registered with DOT.

(2) *ASME Code stamped cargo tanks.* The modification, stretching, or rebarrelling on any ASME Code stamped cargo tank must be performed by a repair facility holding a valid National Board Certificate of Authorization for the use of the National Board ''R'' stamp and registered in accordance with subpart F of part 107 of subchapter B of this chapter. If the modification, stretching, or rebarrelling will result in a design type change, then it must be approved by a Design Certifying Engineer.

(3) Except as provided in paragraph (d)(3)(v) in this section, all new material and equipment, and equipment affected by modification, stretching or rebarrelling must meet the requirements of the specification in effect at the time such work is performed, and must meet the applicable structural integrity requirements (§§ 178.337–3, 178.338–3, or 178.345–3 of this subchapter). The work must conform to the requirements of the applicable specification as follows:

(i) For specification MC 300, MC 301, MC 302, MC 303, MC 305 and MC 306 cargo tanks, the provisions of either specification MC 306 or DOT 406 until August 31, 1995 and, thereafter to specification DOT 406 only;

(ii) For specification MC 304 and MC 307 cargo tanks, the provisions of either specification MC 307 or DOT 407 until August 31, 1995 and, thereafter to specification DOT 407 only;

(iii) For specification MC 310, MC 311, and MC 312 cargo tanks, the provisions of either specification MC 312 or DOT 412 until August 31, 1995 and, thereafter to specification DOT 412 only;

(iv) For specification MC 330 cargo tanks, the provisions of specification MC 331; and

(v) For Specification MC 338 cargo tanks, the provisions of specification MC 338. However, structural modifications to MC 338 cargo tanks authorized under § 180.405(d) may conform to applicable provisions of the ASME Code instead of specification MC 338, provided the structural integrity of the modified cargo tank is at least equivalent to that of the original cargo tank.

(4) The person performing the modification, stretching, or rebarrelling must:

(i) Have knowledge of the original design concept, particularly with respect to structural design analysis, material and welding procedures;

(ii) Assure compliance with the rebuilt cargo tank's structural integrity, venting, and accident damage protection requirements;

(iii) Assure compliance with all applicable Federal Motor Carrier Safety Regulations for any newly installed safety equipment;

(iv) Perform all retest procedures on each cargo tank in accordance with the applicable specification and § 180.407;

(v) Change the existing specification plate to reflect the cargo tank as modified, stretched or rebarrelled. This must include the name of the person doing the work, his DOT registration number, date, retest information, etc. A supplemental specification plate may be installed immediately adjacent to the existing plate(s), or the existing specification plate may be removed and replaced with a new plate; and

(vi) On a variable specification cargo tank, install a supplemental or new variable specification plate, and replace the specification listed on the original specification plate with the words ''see variable specification plate''.

(5) The design of the modified, stretched, or rebarrelled cargo tank must be approved by a Design Certifying Engineer registered in accordance with subpart F of part 107 of subchapter B of this chapter. The Design Certifying Engineer must certify that the modified, stretched, or rebarrelled cargo tank meets the structural integrity requirements of the applicable specification. The person performing the modifying, stretching or rebarrelling and a Registered Inspector must

certify that the cargo tank is in compliance with this section and the applicable specification by issuing a supplemental manufacturer's certificate. The registration number of the Registered Inspector and the person performing the modification, stretching, or rebarrelling must be entered on the certificate. When a cargo tank is rebarrelled, it must be designed, constructed and certified in accordance with a cargo tank specification currently authorized for construction in Part 178 of this subchapter.

(6) If the mounting of the cargo tank on the cargo tank motor vehicle involves welding on the cargo tank head or shell, then the mounting must be performed as follows:

(i) *Non-ASME Code stamped cargo tanks.* For a non-ASME Code stamped cargo tank—

(A) By a cargo tank manufacturer holding an ASME ''U'' stamp, registered with DOT, and under the direction of a Design Certifying Engineer; or

(B) By a repair facility holding an ASME ''U'' stamp or a National Board ''R'' stamp, registered with DOT, and under the direction of a Design Certifying Engineer.

(ii) *ASME Code stamped cargo tank.* For an ASME Code stamped cargo tank, by a repair facility holding a National Board ''R'' stamp, registered in accordance with subpart F of part 107 of subchapter B of this chapter, and approved by a Design Certifying Engineer.

(7) If the mounting of a cargo tank on a cargo tank motor vehicle does not involve welding on the cargo tank head or shell, or a change or modification of the methods of attachment, then the mounting shall be in accordance with the original specification or with the specification in effect at the time of the mounting. If the mounting involves any change or modification of the methods of attachment, then the mounting must be approved by a Design Certifying Engineer.

(8) Prior to any modification, stretching, or rebarrelling a cargo tank must be emptied of any hazardous material lading. Cargo tanks containing flammable or toxic lading must be purged.

(9) Any modification, stretching, or rebarrelling on the cargo tank involving welding on the shell or head must be certified by a Registered Inspector. Any repair of an ASME Code ''U'' stamped cargo tank must be in accordance with the National Board Inspection Code.

(10) The suitability of any modification affecting the structural integrity of the cargo tank, with respect to pressure, must be determined by the testing required either in the applicable manufacturing specification, or in § 180.407(g)(1)(iv).

(e) *Records.* Each owner of a cargo tank must retain at its principal place of business all records of repair, modification, stretching, or rebarrelling made to each cargo tank during the time the cargo tank is in service and for one year thereafter. Copies of these records must be retained by a motor carrier, who is not the owner of the cargo tank, at its principal place of business during the period the cargo tank is in the carrier's service. The seller of a specification cargo tank shall provide the purchaser a copy of the cargo tank Certificate of Compliance, and all repair, inspection and test reports upon sale as an MC or DOT cargo tank.

[Amdt. 180–7, 59 FR 55178, Nov. 3, 1994; 60 FR 17402, Apr. 5, 1995, as amended by Amdt. 180–10, 61 FR 51342, Oct. 1, 1996]

§ 180.415 Test and inspection markings.

(a) Each cargo tank successfully completing the test and inspection requirements contained in § 180.407 must be marked as specified in this section.

(b) Each cargo tank must be durably and legibly marked, in English, with the date (month and year) and the type of test or inspection performed. The date must be readily identifiable with the applicable test or inspection. The marking must be in letters and numbers at least 32 mm (1.25 inches) high, on the tank shell near the specification plate or anywhere on the front head. The type of test or inspection may be abbreviated as follows: V for external visual inspection and test; I for internal visual inspection; P for pressure test; L for lining inspection, K for leakage test; and T for thickness test. For

example, the markings ''10–95 P, V, L'' would indicate that in October 1995 the cargo received and passed the prescribed pressure test, external visual inspection and test, and the lining inspection.

(c) For a cargo tank motor vehicle composed of multiple cargo tanks constructed to the same specification, which are tested and inspected at the same time, one set of test and inspection markings may be used to satisfy the requirements of this section. For a cargo tank motor vehicle composed of multiple cargo tanks constructed to different specifications, which are tested and inspected at different intervals, the test and inspection markings must appear in the order of the cargo tank's corresponding location, from front to rear.

[Amdt. 180–2, 56 FR 27879, June 17, 1991, as amended by Amdt. 180–3, 56 FR 66287, Dec. 20, 1991; 57 FR 45466, Oct. 1, 1992; Amdt. 180–6, 59 FR 49135, Sept. 26, 1994; Amdt. 180–10, 61 FR 51343, Oct. 1, 1996]

§180.417 Reporting and record retention requirements.

(a) *Vehicle certification.* (1) Each owner of a specification cargo tank shall retain the manufacturer's data report or certificate and related papers certifying that the specification cargo tank identified in the documents was manufactured and tested in accordance with the applicable specification. The owner shall retain the documents throughout his ownership of the specification cargo tank and for one year thereafter. In the event of change of ownership, the prior owner shall retain non-fading photo copies of these documents for at least one year.

(2) Each motor carrier who uses a specification cargo tank motor vehicle must obtain a copy of the manufacturer's certificate and related papers or the alternative report authorized in paragraph (a)(3) (i) or (ii) of this section and retain the documents as specified in this paragraph. A motor carrier who is not the owner of a cargo tank motor vehicle must retain a copy of the vehicle certification report at its principal place of business for as long as the cargo tank motor vehicle is used by that carrier and for one year thereafter. Upon a written request to, and with the approval of the Regional Director, Office of Motor Carrier Safety, Federal Highway Administration, for the region in which a motor carrier has its principal place of business, a motor carrier may retain the certificate and related papers required by this paragraph at a regional or terminal office. The addresses and jurisdictions of the various regional Motor Carrier Safety Offices are provided in §390.40 of this title. The provisions of this section do not apply to a motor carrier leasing a cargo tank for less than 30 days.

(3) *DOT Specification cargo tanks manufactured before September 1, 1995*—(i) *Non-ASME Code stamped cargo tanks*— If an owner does not have a manufacturer's certificate for a cargo tank and he wishes to certify it as a specification cargo tank, the owner must perform appropriate tests and inspections, under the direct supervision of a Registered Inspector, to determine if the cargo tank conforms with the applicable specification. Both the owner and the Registered Inspector must certify that the cargo tank fully conforms to the applicable specification. The owner must retain the certificate, as specified in this section.

(ii) *ASME Code stamped cargo tanks.* If the owner does not have the manufacturer's certificate and data report required by the specification, the owner may contact the National Board for a copy of the manufacturer's data report, if the cargo tank was registered with the National Board, or copy the information contained on the cargo tank's identification and ASME Code plates. Additionally, both the owner and the Registered Inspector must certify that the cargo tank fully conforms to the specification. The owner must retain such documents, as specified in this section.

(b) *Test or inspection reporting.* Each cargo tank which is tested or reinspected as specified in §180.407 must have a written report, in English, prepared in accordance with this paragraph.

(1) The test or inspection report must include the following:

(i) Type of test or inspection performed and a listing of all items either tested or inspected (a checklist is acceptable);

(ii) Owner's and manufacturer's serial numbers;

(iii) DOT Specification;

(iv) Test Date (Month and year);

(v) Location of defects found and method used to repair each defect;

(vi) Name and address of person performing the test, the DOT registration number of the facility or the person performing the test;

(vii) Disposition statement, such as ''Cargo tank returned to service'' or ''Cargo tank withdrawn from service''; and

(viii) DOT registration number of the inspector, and dated signature of inspector and owner.

(2) The owner and the motor carrier, if not the owner, must each retain a copy of the test and inspection reports until the next test or inspection of the same type is successfully completed. This requirement does not apply to a motor carrier leasing a cargo tank for less than 30 days.

(c) *Additional requirements for Specification MC 330 and MC 331 cargo tanks.* (1) After completion of the pressure test specified in § 180.407(g)(3), each motor carrier operating a Specification MC 330 or MC 331 cargo tank in anhydrous ammonia, liquefied petroleum gas, or any other service that may cause stress corrosion cracking, must make a written report containing the following information:

(i) Carrier's name, address of principal place of business, and telephone number;

(ii) Complete identification plate data required by Specification MC 330 or MC 331, including data required by ASME Code;

(iii) Carrier's equipment number;

(iv) A statement indicating whether or not the tank was stress relieved after fabrication;

(v) Name and address of the person performing the test and the date of the test;

(vi) A statement of the nature and severity of any defects found. In particular, information must be furnished to indicate the location of defects detected, such as in weld, heat-affected zone, the liquid phase, the vapor phase, or the head-to-shell seam. If no defect or damage was discovered, that fact must be reported;

(vii) A statement indicating the methods employed to make repairs, who made the repairs, and the date they were completed. Also, a statement of whether or not the tank was stress relieved after repairs and, if so, whether full or local stress relieving was performed;

(viii) A statement of the disposition of the cargo tank, such as ''cargo tank scrapped'' or ''cargo tank returned to service''; and

(ix) A statement of whether or not the cargo tank is used in anhydrous ammonia, liquefied petroleum gas, or any other service that may cause stress corrosion cracking. Also, if the cargo tank has been used in anhydrous ammonia service since the last report, a statement indicating whether each shipment of ammonia was certified by its shipper as containing 0.2 percent water by weight.

(2) A copy of the report must be retained by the carrier at its principal place of business during the period the cargo tank is in the carrier's service and for one year thereafter. Upon a written request to, and with the approval of, the Director, Regional Office of Motor Carrier Safety, Federal Highway Administration for the region in which a motor carrier has its principal place of business, the carrier may maintain the reports at a regional or terminal office.

(3) The requirement in paragraph (c)(1) of this section does not apply to a motor carrier leasing a cargo tank for less than 30 days.

(d) *Supplying reports.* Each carrier offering a DOT Specification cargo tank for sale or lease must make available for inspection a copy of the most recent report made under this section to each purchaser or lessee. Copies of such reports must be provided to the purchaser, or the lessee if the cargo tank is leased for more than 30 days.

[Amdt. 180–2, 54 FR 25032, June 12, 1989, as amended at 55 FR 21038, May 22, 1990; 55 FR 37069, Sept. 7, 1990; 56 FR 27879, June 17, 1991; 58 FR 12905, Mar. 8, 1993; Amdt. 180–2, 59 FR 1786, Jan. 12, 1994; Amdt. 180–10, 61 FR 51343, Oct. 1, 1996]

Subpart F—Qualification and Maintenance of Tank Cars

SOURCE: Amdt. 180–8, 60 FR 49079, Sept. 21, 1995, unless otherwise noted.

§ 180.501 Applicability.

(a) This subpart prescribes requirements, in addition to those contained in parts 107, 171, 172, 173, and 179 of this subchapter, applicable to any person who manufactures, fabricates, marks, maintains, repairs, inspects, or services tank cars to ensure continuing qualification.

(b) Any person who performs a function prescribed in this part shall perform that function in accordance with this part.

[Amdt. 180–8, 60 FR 49079, Sept. 21, 1995, as amended by Amdt. 179–50, 61 FR 33256, June 26, 1996]

§ 180.503 Definitions.

The definitions contained in §§ 171.8 and 179.2 of this subchapter apply.

§ 180.505 Quality assurance program.

The quality assurance program requirements of § 179.7 of this subchapter apply.

§ 180.507 Qualification of tank cars.

(a) Each tank car marked as meeting a ''DOT'' specification or any other tank car used for the transportation of a hazardous material must meet the requirements of this subchapter or the applicable specification to which the tank was constructed.

(b) *Tank car specifications no longer authorized for construction.* (1) Tank cars prescribed in the following table are authorized for service provided they conform to all applicable safety requirements of this subchapter:

Specification prescribed in the current regulations	Other specifications permitted	Notes
105A200W	105A100W	1
105A200ALW	105A100ALW	1
105A300W	ICC–105, 105A300.	
105A400W	105A400.	
105A500W	105A500.	
105A600W	105A600.	
106A500X	ICC–27, BE–27, 106A500.	
106A800X	106A800.	
107A * * * *		2

Note 1: Tanks built as Specification DOT 105A100W or DOT 105A100ALW may be altered and converted to DOT 105A200W and DOT 105A200ALW, respectively.

Note 2: The test pressures of tanks built in the United States between January 1, 1941 and December 31, 1955, may be increased to conform to Specification 107A. Original and revised test pressure markings must be indicated and may be shown on the tank or on a plate attached to the bulkhead of the car. Tanks built before 1941 are not authorized.

(2) For each tank car conforming to and used under an exemption issued before October 1, 1984, which authorized the transportation of a cryogenic liquid in a tank car, the owner or operator shall remove the exemption number stenciled on the tank car and stamp the tank car with the appropriate Class DOT–113 specification followed by the applicable exemption number. For example: DOT–113D60W–E * * * * (asterisks to be replaced by the exemption number). The owner or operator marking a tank car in this manner shall retain on file a copy of the last exemption in effect during the period the tank car is in service. No person may modify a tank car marked under this paragraph unless the modification is in compliance with an applicable requirement or provision of this subchapter.

(3) Specification DOT–113A175W, DOT–113C60W, DOT–113D60W, and DOT–113D120W tank cars may continue in use, but new construction is not authorized.

(4) Class DOT 105A and 105S tank cars used to transport hydrogen chloride, refrigerated liquid under the terms of DOT–E 3992 may continue in service, but new construction is not authorized.

§ 180.509 Requirements for inspection and test of specification tank cars.

(a) *General.* (1) Each tank car facility shall evaluate a tank car according to the requirements specified in § 180.511.

(2) Each tank car that successfully passes a periodic inspection and test must be marked as prescribed in § 180.515.

(3) A written report as specified in § 180.517(b) must be prepared for each tank car that is inspected and tested under this section.

(b) *Conditions requiring inspection and test of tank cars.* Without regard to any other periodic inspection and test requirements, a tank car must have an

appropriate inspection and test according to the type of defect and the type of maintenance or repair performed if:

(1) The tank car shows evidence of abrasion, corrosion, cracks, dents, distortions, defects in welds, or any other condition that makes the tank car unsafe for transportation. An example is if maintenance is performed to replace a fitting, then only a leakage pressure test needs to be performed.

(2) The tank car was in an accident and damaged to an extent that may adversely affect its capability to retain its contents.

(3) The tank bears evidence of damage caused by fire.

(4) The Associate Administrator for Safety, FRA, requires it based on the existence of probable cause that a tank car or a class or design of tank cars may be in an unsafe operating condition.

(c) *Frequency of inspection and tests.* Each tank car shall have an inspection and test according to the requirements of this paragraph.

(1) For Class 107 tank cars and tank cars of riveted construction, the tank car must have a hydrostatic pressure test and visual inspection conforming to the requirements in effect prior to July 1, 1996, for the tank specification.

(2) For Class DOT 113 tank cars, see § 173.319(e) of this subchapter.

(3) For fusion welded tank cars, each tank car must have an inspection and test in accordance with paragraphs (d) through (k) of this section.

(i) For cars transporting materials not corrosive to the tank, every 10 years for the tank and service equipment (i.e., filling and discharge, venting, safety, heating, and measuring devices).

(ii) For non-lined or non-coated tank cars transporting materials corrosive to the tank, an interval based on the following formula, but in no case shall the interval exceed 10 years for the tank and 5 years for service equipment:

$$i = \frac{t_1 - t_2}{r}$$

(iii) For lined or coated tank cars transporting a material corrosive to the tank, every 10 years for the tank, 5 years for the service equipment.

(A) When a lining or coating is applied to protect the tank shell from the lading, the owner of the lining or coating shall determine the periodic inspection interval, test technique, and acceptance criteria for the lining or coating. The owner must maintain at its principal place of business all supporting documentation used to make such a determination, such as the lining or coating manufacturer's recommended inspection interval, test technique, and acceptance criteria. The supporting documentation must be made available to FRA upon request.

(B) The owner of the lining or coating shall provide the periodic inspection interval, test technique, and acceptance criteria for the lining or coating to the person responsible for qualifying the lining and coating.

(d) *Visual inspection.* At a minimum, each tank car facility must visually inspect the tank externally and internally as follows:

(1) An internal inspection of the tank shell and heads for abrasion, corrosion, cracks, dents, distortions, defects in welds, or any other condition that makes the tank car unsafe for transportation, and except in the areas where insulation or a thermal protection system precludes it, an external inspection of the tank shell and heads for abrasion, corrosion, cracks, dents, distortions, defects in welds, or any other condition that makes the tank car unsafe for transportation;

(2) An inspection of the piping, valves, fittings, and gaskets for indications of corrosion and other conditions that make the tank car unsafe for transportation;

(3) An inspection for missing or loose bolts, nuts, or elements that make the tank car unsafe for transportation;

(4) An inspection of all closures on the tank car for proper securement in a tool tight condition and an inspection of the protective housings for proper securement;

(5) An inspection of excess flow valves having threaded seats for tightness; and

(6) An inspection of the required markings on the tank car for legibility.

(e) *Structural integrity inspections and tests.* At a minimum, each tank car facility shall inspect the tank car for

structural integrity as specified in this section. The structural integrity inspection and test shall include all transverse fillet welds greater than 0.64 cm (0.25 inch) within 121.92 cm (4 feet) of the bottom longitudinal center line; the termination of longitudinal fillet welds greater than 0.64 cm (0.25 inch) within 121.92 cm (4 feet) of the bottom longitudinal center line; and all tank shell butt welds within 60.96 cm (2 feet) of the bottom longitudinal center line by one or more of the following inspection and test methods to determine that the welds are in proper condition:

(1) Dye penetrant test;

(2) Radiography test;

(3) Magnetic particle test;

(4) Ultrasonic test; or

(5) Optically-aided visual inspection (e.g., magnifiers, fiberscopes, borescopes, and machine vision technology).

(f) *Thickness tests.* (1) Each tank car facility shall measure the thickness of the tank car shell, heads, sumps, domes, and nozzles on each tank car by using a device capable of accurately measuring the thickness to within ±0.05 mm (±0.002 inch).

(2) After repairs, alterations, conversions or modifications of a tank car that result in a reduction to the tank car shell thickness, the tank car facility shall measure the thickness of the tank car shell in the area of reduced shell thickness to ensure that the shell thickness conforms to paragraph (g) of this section.

(g) *Service life shell thickness allowance.* (1) A tank car found with a shell thickness below the required minimum thickness after forming for its specification, as stated in part 179 of this subchapter, may continue in service if:

(i) Construction of the tank car shell and heads is from carbon steel, stainless steel, aluminum, nickel, or manganese-molybdenum steel; and

(ii) Any reduction in the required minimum thickness of the tank shell or head is not more than that provided in the following table:

ALLOWABLE SHELL THICKNESS REDUCTIONS

Damage type	Class DOT 103, 104, 111, and 115 tank cars		Class DOT 105, 109, 112, and 114 tank cars	
	Top shell and tank head	Bottom shell	Top shell and tank head	Bottom shell
Corrosion	3.17 mm (0.125 inch).	1.58 mm (0.063 inch).	0.79 mm (0.031 inch).	0.79 mm (0.031 inch).
Corrosion and mechanical.	3.17 mm (0.125 inch).	1.58 mm (0.063 inch).	0.79 mm (0.031 inch).	0.79 mm (0.031 inch).
Corrosion, local	4.76 mm (0.188 inch).	3.17 mm (0.125 inch).	1.58 mm (0.063 inch).	1.58 mm (0.063 inch).
Mechanical, local	3.17 mm (0.125 inch).	1.58 mm (0.063 inch).	1.58 mm (0.063 inch).	1.58 mm (0.063 inch).
Corrosion and mechanical, local.	4.76 mm (0.188 inch).	3.17 mm (0.125 inch).	1.58 mm (0.063 inch).	1.58 mm (0.063 inch).

Notes:

1. The perimeter for a local reduction may not exceed a 60.96 cm (24 inch) perimeter. Local reductions in the top shell must be separated from other reductions in the top shell by at least 40.64 cm (16 inches). The cumulative perimeter for local reductions in the bottom shell may not exceed 182.88 cm (72 inches).
2. Any reduction in the tank car shell may not affect the structural strength of the tank car so that the tank car shell no longer conforms to Section 6.2 of the AAR Specifications for Tank Cars.
3. Any reduction applies only to the outer shell for Class DOT 115 tank cars.
4. For Class DOT 103 and 104 tank cars, the inside diameter may not exceed 243.84 cm (96 inches).

(h) *Safety system inspections.* At a minimum, each tank car facility must inspect:

(1) Tank car thermal protection systems, tank head puncture resistance systems, coupler vertical restraint systems, and systems used to protect discontinuities (i.e., skid protection and protective housings) to ensure their integrity.

(2) Reclosing pressure relief devices by:

(i) Removing the safety relief device from the tank car for inspection; and

(ii) Testing the safety relief device with air or another gas to ensure that it conforms to the start-to-discharge pressure for the specification or hazardous material in this subchapter.

(i) *Lining and coating inspection and test.* When this subchapter requires a lining or coating, at a minimum, each tank car facility must inspect the lining or coating installed on the tank car according to the inspection interval test technique, and acceptance criteria established by the owner of the lining or coating in accordance with paragraph (c)(3)(iii) of this section.

(j) *Leakage pressure test.* (1) After reassembly of a tank car or service equipment, a tank car facility must perform a leak test on the tank or service equipment to detect leakage, if any, between manway covers, cover plates, and service equipment. The test may be conducted with the hazardous material in the tank. When the test pressure exceeds the start-to-discharge or burst pressure of a pressure relief device, the device must be rendered inoperative. The written procedures and test method for leak testing must ensure for the sensitivity and reliability of the test method and for the serviceability of components to prevent premature failure.

(2) Interior heater systems must be tested hydrostatically at 13.87 Bar (200 psi) and must show no signs of leakage.

(k) *Alternative inspection and test procedures.* In lieu of the other requirements of this section, a person may use an alternative inspection and test procedure or interval based on a damage-tolerance fatigue evaluation (that includes a determination of the probable locations and modes of damage due to fatigue, corrosion, or accidental damage), when the evaluation is examined by the Association of American Railroads Tank Car Committee and approved by the Associate Administrator for Safety, FRA.

(l) *Inspection and test compliance date for tank cars.* After July 1, 2000, each tank car with a metal jacket or with a thermal protection system shall have an inspection and test conforming to this section no later than the date the tank car requires a periodic hydrostatic pressure test (i.e., the marked due date on the tank car for the hydrostatic test).

(2) After July 1, 1998, each tank car without a metal jacket shall have an inspection and test conforming to this section no later than the date the tank car requires a periodic hydrostatic pressure test (i.e., the marked due date on the tank car for the hydrostatic test).

(3) For tank cars on a 20-year periodic hydrostatic pressure test interval (i.e., Class DOT 103W, 104W, 111A60W1, 111A100W1, and 111A100W3 tank cars), the next inspection and test date is the midpoint between the compliance date in paragraph (l)(1) or (2) of this section and the remaining years until the tank would have had a hydrostatic pressure test.

[Amdt. 180–8, 60 FR 49079, Sept. 21, 1995, as amended by Amdt. 179–50, 61 FR 33256, June 26, 1996; 62 FR 51561, Oct. 1, 1997]

§ 180.511 Acceptable results of inspections and tests.

Provided it conforms with other applicable requirements of this subchapter, a tank car is qualified for use if it successfully passes the following inspections and tests conducted in accordance with this subpart:

(a) *Visual inspection.* A tank car successfully passes the visual inspection when the inspection shows no structural defect that may cause leakage from or failure of the tank before the next inspection and test interval.

(b) *Structural integrity inspection and test.* A tank car successfully passes the structural integrity inspection and test when it shows no structural defect that may initiate cracks or propagate cracks and cause failure of the tank before the next inspection and test interval.

(c) *Service life shell thickness.* A tank car successfully passes the service life shell thickness inspection when the tank shell and heads show no thickness reduction below that allowed in § 180.509(g).

(d) *Safety system inspection.* A tank car successfully passes the safety system inspection when each thermal protection system, tank head puncture resistance system, coupler vertical restraint system, and system used to protect discontinuities (e.g., breakage grooves on bottom outlets and protective housings) on the tank car conform to this subchapter.

(e) *Lining and coating inspection.* A tank car successfully passes the lining and coating inspection and test when

the lining or conforms to the owner's acceptance criteria.

(f) *Leakage pressure test.* A tank car successfully passes the leakage pressure test when all product piping, fittings and closures show no indication of leakage.

(g) *Hydrostatic test.* A Class 107 tank car or a riveted tank car successfully passes the hydrostatic test when it shows no leakage, distortion, excessive permanent expansion, or other evidence of weakness that might render the tank car unsafe for transportation service.

[Amdt. 180–8, 60 FR 49079, Sept. 21, 1995, as amended by Amdt. 179–50, 61 FR 33256, June 26, 1996]

§180.513 Repairs, alterations, conversions, and modifications.

(a) In order to repair tank cars, the tank car facility must comply with the requirements of Appendix R of the AAR Specifications for Tank Cars.

(b) Unless the exterior tank car shell or interior tank car jacket has a protective coating, after a repair that requires the complete removal of the tank car jacket, the exterior tank car shell and the interior tank car jacket must have a protective coating applied to prevent the deterioration of the tank shell and tank jacket.

§180.515 Markings.

(a) When a tank car passes the required inspection and test with acceptable results, the tank car facility shall mark the date of the inspection and test and the due date of the next inspection and test on the tank car in accordance with Appendix C of the AAR Specifications for Tank Cars. When a tank car facility performs multiple inspection and test at the same time, one date may be used to satisfy the requirements of this section. One date also may be shown when multiple inspection and test have the same due date.

(b) Converted tank cars must have the new specification and conversion date permanently marked in letters and figures at least 0.95 cm (0.375 inch) high on the outside of the manway nozzle or the edge of the manway nozzle flange on the left side of the car. The marking may have the last numeral of the specification number omitted (e.g., ''DOT 111A100W'' instead of ''DOT 111A100W1'').

(c) When pressure tested within six months of installation and protected from deterioration, the test date marking of a safety relief device is the installation date on the tank car.

[Amdt. 180–8, 60 FR 49079, Sept. 21, 1995, as amended by Amdt. 179–50, 61 FR 33256, June 26, 1996]

§180.517 Reporting and record retention requirements.

(a) *Certification and representation.* Each owner of a specification tank car shall retain the certificate of construction (AAR Form 4–2) and related papers certifying that the manufacture of the specification tank car identified in the documents is in accordance with the applicable specification. The owner shall retain the documents throughout the period of ownership of the specification tank car and for one year thereafter. Upon a change of ownership, the requirements of Section 1.3.15 of the AAR Specifications for Tank Cars apply.

(b) *Inspection and test reporting.* Each tank car that is inspected as specified in §180.509 must have a written report, in English, prepared according to this paragraph. The owner must retain a copy of the inspection and test reports until successfully completing the next inspection and test of the same type. The inspection and test report must include the following:

(1) Type of inspection and test performed (a checklist is acceptable);

(2) The results of each inspection and test performed;

(3) Owner's reporting mark;

(4) DOT Specification;

(5) Inspection and test date (month and year);

(6) Location and description of defects found and method used to repair each defect;

(7) The name and address of the tank car facility and the signature of inspector.

§180.519 Periodic retest and inspection of tank cars other than single-unit tank car tanks.

(a) *General.* Unless otherwise provided in this subpart, tanks designed to

be removed from cars for filling and emptying and tanks built to a Class DOT 107A specification and their safety relief devices must be retested periodically as specified in Retest Table 1 of paragraph (b)(5) of this section. Retests may be made at any time during the calendar year the retest falls due.

(b) *Pressure test.* (1) Each tank, except as provided in paragraph (b)(8) of this section, must be subjected to the specified hydrostatic pressure and its permanent expansion determined. Pressure must be maintained for 30 seconds and far as long as necessary to secure complete expansion of the tank. Before testing, the pressure gauge must be shown to be accurate within 1 percent at test measure. The expansion gauge must be shown to be accurate, at test pressure, to within 1 percent. Expansion must be recorded in cubic centimeters. Permanent volumetric expansion may not exceed 10 percent of total volumetric expansion at test pressure and the tank must not leak or show evidence of distress.

(2) Each tank, except tanks built to specification DOT 107A, must also be subjected to interior air pressure test of at least 100 psi under conditions favorable to detection of any leakage. No leaks may appear.

(3) Safety relief valves must be retested by air or gas, must start to discharge at or below the prescribed pressure and must be vapor tight at or above the prescribed pressure.

(4) Frangible discs and fusible plugs must be removed from the tank and visually inspected.

(5) Tanks must be retested as specified in Retest Table 1 of this paragraph (b)(5), and before returning to service after repairs involving welding or heat treatment:

RETEST TABLE 1

Specification	Retest interval—years		Minimum Retest pressure—p.s.i.		Safety relief valve pressure—p.s.i.	
	Tank	Safety relief devices [d]	Tank hydrostatic expansion [c]	Tank air test	Start-to-discharge	Vapor tight
DOT 27	5	2	500	100	375	300
106A500	5	2	500	100	375	300
106A500X	5	2	500	100	375	300
106A800	5	2	800	100	600	480
106A800X	5	2	800	100	600	480
106A800NCI	5	2	800	100	600	480
107A * * * *	[d]5	[a]2	([b])	None	None	None
110A500–W	5	2	500	100	375	300
110A600–W	5	2	600	100	500	360
110A800–W	5	2	800	100	600	480
110A1000–W	5	2	1,000	100	750	600
BE–27	5	2	500	100	375	300

Notes:

[a] If DOT 107A * * * * tanks are used for transportation of flammable gases, one frangible disc from each car must be burst at the interval prescribed. The sample disc must burst at a pressure not exceeding the marked test pressure of the tank and not less than 70 percent of the marked test pressure. If the sample disc does not burst within the prescribed limits, all discs on the car must be replaced.

[b] The hydrostatic expansion test pressure must at least equal the marked test pressure.

[c] See § 180.519(b)(1).

[d] Safety relief valves of the spring-loaded type on tanks used exclusively for fluorinated hydrocarbons and mixtures thereof which are free from corroding components may be retested every 5 years.

(6) The month and year of test, followed by a ''V'' if visually inspected as described in paragraph (c) of this section, must be plainly and permanently stamped into the metal of one head or chime of each tank with successful test results; for example, 01–90 for January 1990. On DOT 107A**** tanks, the date must be stamped into the metal of the marked end, except that if all tanks mounted on a car have been tested, the date may be stamped into the metal of a plate permanently applied to the bulkhead on the ''A'' end of the car. Dates of previous tests and all prescribed markings must be kept legible.

(c) *Visual inspection.* Tanks of Class DOT 106A and DOT 110A–W specifications (§§ 179.300, 179.301, 179.302 of this subchapter) used exclusively for transporting fluorinated hydrocarbons and mixtures thereof, and that are free

from corroding components, may be given a periodic complete internal and external visual inspection in place of the periodic hydrostatic retest. Visual inspections shall be made only by competent persons. The tank must be accepted or rejected in accordance with the criteria in CGA Pamphlet C–6.

(d) *Written records.* The results of the pressure test and visual inspection must be recorded on a suitable data sheet. Completed copies of these reports must be retained by the owner and by the person performing the pressure test and visual inspection as long as the tank is in service. The information to be recorded and checked on these data sheets are: Date of test and inspection; DOT specification number; tank identification (registered symbol and serial number, date of manufacture and ownership symbol); type of protective coating (painted, etc., and statement as to need for refinishing or recoating); conditions checked (leakage, corrosion, gouges, dents or digs, broken or damaged chime or protective ring, fire, fire damage, internal condition); test pressure; results of tests; and disposition of tank (returned to service, returned to manufacturer for repair, or scrapped); and identification of the person conducting the retest or inspection.

[Amdt. 180–8, 60 FR 49079, Sept. 21, 1995, as amended by Amdt. 179–50, 61 FR 33257, June 26, 1996]

FINDING AIDS

A list of CFR titles, subtitles, chapters, subchapters and parts and an alphabetical list of agencies publishing in the CFR are included in the CFR Index and Finding Aids volume to the Code of Federal Regulations which is published separately and revised annually.

Material Approved for Incorporation by Reference
Table of CFR Titles and Chapters
Alphabetical List of Agencies Appearing in the CFR
List of CFR Sections Affected

Material Approved for Incorporation by Reference

(Revised as of October 1, 1997)

The Director of the Federal Register has approved under 5 U.S.C. 552(a) and 1 CFR Part 51 the incorporation by reference of the following publications. This list contains only those incorporations by reference effective as of the revision date of this volume. Incorporations by reference found within a regulation are effective upon the effective date of that regulation. For more information on incorporation by reference, see the preliminary pages of this volume.

49 CFR (PARTS 100–185)

RESEARCH AND SPECIAL PROGRAMS ADMINISTRATION, DEPARTMENT OF TRANSPORTATION (HAZARDOUS MATERIALS REGULATIONS)

	49 CFR
Aluminum Association	
420 Lexington Ave., New York, NY 10017	
Aluminum Standards and Data, Seventh Edition, June 1982	171.7; 172.102; 178.46; 178.65
American National Standards Institute	
1430 Broadway, New York, NY 10018	
ANSI B9.1–89, Safety Code for Mechanical Refrigeration	173.306
ANSI B16.5–77 Steel Pipe Flanges, Flanged Fittings	178.345; 178.360
ANSI N14.1–90 Packaging of Uranium Hexafluoride for Transport	173.417; 173.420
ANSI N14.1–87 Packaging of Uranium Hexafluoride for Transport	173.417; 173.420
ANSI N14.1–82 Packaging of Uranium Hexafluoride for Transport	173.417; 173.420
ANSI N14.1–71, Packaging of Uranium Hexafluoride for Transport	173.417; 173.420
ANSI/ASHRAE 15–1994, Safety Code for Mechanical Refrigeration	171.7; 173.306
American Pyrotechnics Association	
P.O. Box 213, Chestertown, MD 21620	
APA Standard 87–1 Standards for Construction and Approval for Transportation of Fireworks and Novelties, April 1993 ed.	173.56
American Society of Mechanical Engineers	
Service Center, 22 Law Drive, P.O. Box 2900, Fairfield, NJ 07007, Telephone (610) 832-9585, FAX (610) 832-9555	
ASME Code:	
ASME Code:	
Sections II (Parts A and B), V, VIII and IX of 1986 Ed. of American Society of Mechanical Engineers Boiler and Pressure Code and Addenda through June 30, 1985.	173.32; 173.306; 173.315; 173.318; 173.420; 177.814
Section II (Parts A and B) (1992 and Addenda through December 31, 1993).	171.1; 178.245; 178.255; 178.270; 178.271; 178.272; 178.337; 178.338; 178.345; 178.346; 178.347; 178.348; 179.400; 180.407; 180.417

49 CFR (PARTS 100–185)—Continued

RESEARCH AND SPECIAL PROGRAMS ADMINISTRATION, DEPARTMENT OF TRANSPORTATION (HAZARDOUS MATERIALS REGULATIONS)—Continued

	49 CFR
Section V (FR Nondestructive Examination) (1992 and Addenda through December 31, 1993).	171.1; 178.245; 178.255; 178.270; 178.271; 178.272; 178.337; 178.338; 178.345; 178.346; 178.347; 178.348; 179.400; 180.407; 180.417
Section VIII, Division 1 Pressure Vessels (1992 with Interpretations, Volume 30, 1992 and Addenda through December 31, 1993).	171.1; 178.245; 178.255; 178.270; 178.271; 178.272; 178.337; 178.338; 178.345; 178.346; 178.347; 178.348; 179.400; 180.407; 180.417
ASME Code, Section V (FR Nondestructive examination, 1977)	173.33
American Society for Testing and Materials	
100 Barr Harbor Drive, West Conshohocken, PA, 19428-2959, Telephone (610) 832-9585, FAX (610) 832-9555	
Noncurrent ASTM standards are available from: Engineering Societies Library, 354 E. 47th St., New York, NY 10017.	
ASTM A 20/A 20M–93a Standard Specification for General Requirements for Steel Plates for Pressure Vessels.	171.7; 178.337–2; 179.102–4; 179.102–17
ASTM A 47–68 Malleable Iron Castings	179.200
ASTM A 53–69a Welded Seamless Steel Pipe	179.12–2
ASTM A 178–70 Electric Resistance Welded Carbon Steel Boiler Tubes.	179.12
ASTM A 192–69 Seamless Carbon Steel Boiler Tubes for High Pressure Service.	179.12
ASTM A 240–82 Standard Specification for Heat-Resisting Chromium and Chromium-Nickel Stainless Steel Plate, Sheet and Strip for Fusion-Welded Unfired Pressure Vessels, Revision A.	171.7
ASTM A 240/A 240M–94b Standard Specification for Heat-Resisting Chromium and Chromium-Nickel Stainless Steel Plate, Sheet and Strip for Pressure Vessels.	171.7; 178.57; 178.358–5; 179.100–7; 179.100–10; 179.102–1; 179.102–4; 179.102–17; 179.200–7; 179.201–5; 179.220–7; 179.400–5
ASTM A 242–81 High-Strength Low Alloy Structural Steel	179.100
ASTM A 262–93a Standard Practices for Detecting Susceptibility to Intergranular Attack in Austenitic Stainless Steels.	171.7; 179.100–7; 179.200–7; 179.201–4
ASTM A 269–69 Seamless and Welded Austenitic Stainless Steel Tubing for General Service.	179.12–2
ASTM A 285–78 Pressure Vessel Plates, Carbon Steel, Low- and Intermediate-Tensile Strength.	179.100; 179.200; 179.220; 179.300

Material Approved for Incorporation by Reference

49 CFR (PARTS 100–185)—Continued

RESEARCH AND SPECIAL PROGRAMS ADMINISTRATION, DEPARTMENT OF TRANSPORTATION (HAZARDOUS MATERIALS REGULATIONS)—Continued

	49 CFR
ASTM A 300–58 Steel Plates for Pressure Vessels for Service at Low Temperatures.	178.337
ASTM A 302/A 302M–93 Standard Specification for Pressure Vessel Plates, Alloy Steel, Manganese-Molybdenum and Manganese-Molybdenum Nickel.	171.7; 179.100–7; 179.200–7; 179.220–7
ASTM A 312–70a Seamless and Welded Austenitic Stainless Steel Pipe.	179.12
ASTM A 333–67 Seamless and Welded Steel Pipe for Low-Temperature Service.	178.45
ASTM A 366/A 366M–91 (1993)e1 Standard Specification for Steel: Sheet, Carbon, Cold-Rolled, Commercial Quality.	178.601
ASTM A 370–94 Standard Test Methods and Definitions for Mechanical Testing of Steel Products.	171.7; 179.102–1; 179.102–4; 179.102–17
ASTM A 388–67 Ultrasonic Testing and Inspection of Heavy Steel Forging.	178.45
ASTM A 441–81 High-Strength Low-Alloy Structural Manganese Vanadium Steel.	178.338
ASTM A 514–81 High-Yield-Strength, Quenched and Tempered Alloy Steel Plate, Suitable for Welding.	178.338
ASTM A 515–69 Carbon Steel Plates for Pressure Vessels for Intermediate and Higher Temperature Service.	179.100; 179.200; 179.220; 179.300
ASTM A 516/A 516M–90 Standard Specification for Pressure Vessel Plates, Carbon Steel, for Moderate and Lower-Temperature Service.	171.7; 178.337–2; 179.100–7; 179.102–1; 179.102–2; 179.102–4; 179.102–17; 179.200–7; 179.200–20; 179.220–7
ASTM A 537/A 537M–91 Standard for Pressure Vessel Plates, Heat-Treated, Carbon-Manganese-Silicon Steel.	171.7; 179.100–7; 179.102–4; 179.102–17
ASTM A 568/A 568M–95 Standard Specification for Steel: Sheet, Carbon, and High-Strength, Low-Alloy, Hot-Rolled and Cold-Rolled, General Requirements.	178.601
ASTM A 572–82 High-Strength Low Alloy Columbium-Vanadium Steels of Structural Quality.	178.338; 179.100
ASTM A 588–81 High-Strength Low-Alloy Structural Steel with 50 ksi Minimum Yield Point to 4 in. Thick.	178.338; 179.100
ASTM A 606–75 Steel Sheet and Strip, Hot-Rolled and Cold-Rolled, High Strength, Low Alloy, with Improved Atmospheric Corrosion Resistance (reapproved 1981).	178.338
ASTM A 612–72a High-Strength Steel Plates for Pressure Vessels for Moderate and Lower Temperature Service.	178.337
ASTM A 633–79a Normalized High-Strength Low Alloy Structural Steel.	178.338
ASTM A 715–81 Steel Sheet and Strip, Hot-Rolled, High-Strength, Low-Alloy, with Improved Formability.	179.200
ASTM B 90–69 Magnesium Alloy Sheet and Plate	178.251
ASTM B 161–70 Nickel Seamless Pipe and Tube, 1970	179.12

49 CFR (PARTS 100–185)—Continued

RESEARCH AND SPECIAL PROGRAMS ADMINISTRATION, DEPARTMENT OF TRANSPORTATION (HAZARDOUS MATERIALS REGULATIONS)—Continued

	49 CFR
ASTM B 162–93a Standard Specification for Nickel Plate, Sheet, and Strip.	171.7; 179.200–7
ASTM B 209–93 Standard Specification for Aluminum and Aluminum-Alloy Sheet and Plate.	171.7; 179.100–7; 179.200–7; 179.220–7
ASTM B 210–70 Aluminum Alloy Drawn Stainless Tables (FR B210–68 (78)).	179.12
ASTM B 221–76 Aluminum Alloy Extruded Bars, Rods, Shapes, and Tubes.	179.12
ASTM B 241–76 Aluminum-Alloy Seamless Pipe and Seamless Extruded Tube.	179.12–2
ASTM B 557–84 Tension Testing Wrought and Cast Aluminum and Magnesium-Alloy Products.	171.7; 178.46; 178.251
ASTM B 580–79 Standard Specification for Anodie Oxide Coatings on Aluminium.	173.316; 173.318
ASTM D 56–93 Flash Point by Tag Closed Tester	173.120
ASTM D 93–90 Flash Point by Pensky Martens Closed Tester	173.120
ASTM D 93–94 Standard Test Methods for Flash-Point by Pensky-Martens Closed-Cup Tester.	171.7; 173.120
ASTM D 445–88 Kinematic Viscosity of Transparent and Opaque Liquids (and the Calculation of Dynamic Voscosity).	171.8
ASTM D 1200–88 Viscosity by Ford Viscosity Cup	171.8
ASTM D 1238–90b Standard Test Method for Flow Rates of Thermoplastics for Extrusion Plastometer.	171.7; 173.225
ASTM D 1838–64 Copper Strip Corrosion by Liquefied Petroleum (LP) Gases.	173.315
ASTM D 3278–89 Flash Point of Liquids by Setaflash Closed Tester	173.120
ASTM D 3278–95 Standard Test Methods for Flash Point of Liquids by Setaflash Closed-Cup Apparatus.	171.7; 173.120
ASTM 3828–93 Standard Test Methods for Flash Point by Small Scale Closed Tester.	173.120
ASTM D 4206–96 Standard Test Method for Sustained Burning of Liquid Measures Using the Small Scale Open-Cup Apparatus.	173.120
ASTM D 4359–90 Standard Test Method for Determining Whether a Material is a Liquid or a Solid.	130.5; 171.8
ASTM E 8–89b Tension Testing of Metallic Materials	178.36; 178.37; 178.38; 178.39; 178.44; 178.45; 178.50; 178.51; 178.53; 178.55; 178.56; 178.57; 178.58; 178.59; 178.60; 178.61; 178.68; 178.251
ASTM E 23–60 Notched Bar Impact Testing of Metallic Materials	178.57; 179.400
ASTM E 112–88 Standard Test Methods for Determining Average Grain Size.	171.7; 178.44
ASTM E 290–92 Standard Test Method for Semi-Guided Bend Test for Ductility of Metallic Materials.	171.7; 178.46
ASTM E 681–85 Standard Test Method for Concentration Limits of Flammability of Chemicals.	173.115

49 CFR (PARTS 100–185)—Continued

RESEARCH AND SPECIAL PROGRAMS ADMINISTRATION, DEPARTMENT OF TRANSPORTATION (HAZARDOUS MATERIALS REGULATIONS)—Continued

	49 CFR
ASTM G 23–69 Standard Recommended Practice for Operating Light-and-Water Exposure Apparatus (Carbon-Arc Type) for Exposure of Nonmetallic Materials.	172.407; 172.519
ASTM G 26–70 Standard Recommended Practice for Operating Light-and-Water-Exposure Apparatus (Xenon-Arc-Type) for Exposure of Nonmetallic Materials.	172.407; 172.519
ASTM G 31–72 (Reapproved 1990) Standard Practice for Laboratory Immersion Corrosion Testing of Metals.	171.7; 173.137
ASTM G 31–72 (Reapproved 1995) Standard Practice for Laboratory Immersion Corrosion Testing of Metals.	171.7; 173.137
American Water Works Association (AWWA)	
1010 Vermont Avenue, NW., Suite 810, Washington, DC 20005	
AWWA Standard C207–55, Steel Pipe Flanges; 1955	178.360
American Welding Society (AWS)	
550 N.W. Le Jeune Road, Miami, FL 33126	
AWS Code B 3.0; Standard Qualification Procedure; 1972 (FRB 3.0–41 rev. May 73).	178.356
AWS Code D1.0; Code for Welding in Building Construction, (FR D1.0–66).	178.356
Association of American Railroads (AAR)	
American Railroads Building, 50 F St., NW., Washington, DC 20001	
AAR Manual of Standards and Recommended Practices, Section I, Specially Equipped Freight Car and Intermodal Equipment, 1988.	171.7; 174.55; 174.63
AAR Manual of Standards and Recommended Practices, Section C—Part III, Specification for Tank Cars, Specification M–1002, September 1992.	171.7; 173.31; 174.63; 179.6; 179.7; 179.12; 179.16; 179.20; 179.22; 179.100; 179.101; 179.102; 179.103; 179.105; 179.200; 179.201; 179.220; 179.300; 179.400; 180.509; 180.513; 180.517; 180.575
AAR Specification for Design, Fabrication and Construction of Freight Cars; Volume 1, 1988.	179.100–23
Chlorine Institute, Inc.	
2001 L Street, NW., Suite 506, Washington, DC 20036	
Type 1-1/2 JQ 225, Dwg. H51970, Revision D, April 5, 1989; or Type 1-1/2 JQ 225, Dwg. H50155, Revision F, April 4, 1989.	173.315
Standard Chlorine Angle Valve Assembly, Dwg. 104–6, December 1, 1982.	178.337–9
Excess Flow Valve with Removable Seat, Dwg. 101–6, September 1, 1973.	178.337–11
Excess Flow Valve with Removable Baskets, 106–5, September 1, 1973.	178.337–11
Standards for Housing and Manway Covers for Steel Cargo Tanks, Dwg. 137–3, September 1, 1982.	178.337–10
Centers for Disease Control and Prevention/National Institutes of Health	
Superintendent of Documents, U.S. Government Printing Office, Washington, DC 20402, Telephone 202–512-1800	

49 CFR (PARTS 100–185)—Continued

RESEARCH AND SPECIAL PROGRAMS ADMINISTRATION, DEPARTMENT OF TRANSPORTATION (HAZARDOUS MATERIALS REGULATIONS)—Continued

	49 CFR
Biosafety in Microbiological and Biomedical Laboratories, Third Edition, May 1993.	173.134
Compressed Gas Association, Inc. (CGA) 1725 Jefferson Davis Highway, Suite 1004, Arlington, VA 22202	
CGA Pamphlet C–3 Standards for Welding and Brazing on Thinned Walled Containers.	171.7; 178.47; 178.50; 178.51; 178.53; 178.54; 178.56; 178.57; 178.58; 178.59; 178.60; 178.61; 178.65; 178.68
CGA Pamphlet C–5 Cylinder Service Life-Seamless Steel High Pressure Cylinders, 1991.	171.7; 173.302
CGA Pamphlet C–6 Standards for Visual Inspection of Compressed Gas Cylinders, 1993.	171.7; 173.34; 180.519
Pamphlet CGA C–6.1 Standards for Visual Inspection of High Pressure Aluminum Compressed Gas Cylinders, 1995.	171.7; 173.34
CGA Pamphlet C–6.2 Guidelines for Visual Inspection and Requalification of Fiber Reinforced High Pressure Cylinders, 1988.	171.7; 173.34
CGA Pamphlet C–6.3 Guidelines for Visual Inspection and Requalification of Low Pressure Aluminum Compressed Gas Cylinders, 1991.	171.7; 173.34
CGA Pamphlet C–7 A Guide for the Preparation of Precautionary Markings for Compressed Gas Containers, Appendix A, issued 1992 (6th Edition).	172.400a
CGA Pamphlet C–8 Standard for Requalification of DOT–3HT Cylinder Design, 1985.	173.34
CGA Pamphlet C–11 Recommended Practices for Inspection of Compressed Gas Cylinders at Time of Manufacture, 1993.	171.7; 178.35
CGA Pamphlet C–12 Qualification Procedure for Acetylene Cylinder Design, 1979.	171.7; 173.34; 173.303; 178.59; 178.60
CGA Pamphlet C–13, Guidelines for Periodic Visual Inspection and Requalification of Acetylene Cylinders, 1992.	171.7; 173.34; 173.303
CGA Pamphlet C–14 Procedures for Fire Testing of DOT Cylinder Pressure Relief Device Systems, 1979.	173.34
CGA Pamphlet G–2.2 Guideline Method for Determining Minimum of 0.2% Water in Anhydrous Ammonia, 1985.	173.315
CGA Pamphlet G–4.1 Cleaning Equipment for Oxygen Service, 1985	178.338
CGA Pamphlet S–1.1 Pressure Relief Device Standards Part 1—Cylinders for Compressed Gases, 1994.	171.7; 173.34
CGA Pamphlet S–1.2 Safety Relief Device Standards Part 2—Cargo and Portable Tanks for Compressed Gases, 1980.	173.315; 173.318
CGA Technical Bulletin TB–2 Guidelines for Inspection and Repair of MC–330 and MC–331 Cargo Tanks, 1980.	180.413
Department of Defense 2461 Eisenhower Ave., Alexandria, VA 22331	
TB 700–2 Explosives Hazard Classification Procedures, December 1989.	173.56
Department of Energy (USDOE) Office of Scientific and Technical Information, P.O. Box 62, Oak Ridge, TN 37831	

49 CFR (PARTS 100–185)—Continued

RESEARCH AND SPECIAL PROGRAMS ADMINISTRATION, DEPARTMENT OF TRANSPORTATION (HAZARDOUS MATERIALS REGULATIONS)—Continued

	49 CFR
USDOE, CAPE—1622, Revision 1, and Supp. 1, Civilian Application Program Engineering Drawings.	178.356; 178.358
USDOE, Material and Equipment Specification No. SP—9 Rev. 1, and Supp., Fire Resistant Phenolic Foam.	178.356; 178.358
USDOE, ORO–651—Uranium Hexafluoride Handling Procedures and Container Criteria, Revision 3, 1972.	178.356; 178.358
USDOE, ORO–651—Uranium Hexafluoride: A Manual of Good Handling Practices, Rev. 6, 1991 ed.	171.7; 173.417
USDOE KSS–471, November 30, 1986—Proposal for Modifications to U.S. Department of Transportation Specification 21PF–1 Fire and Shock Resistant Phenolic Foam—Insulated Metal Overpack.	178.358
Fertilizer Institute	
501 Second St., NE., Washington, DC 20002	
Definitions and Test Procedures for Ammonium Nitrate Fertilizer, August 1984.	174.510
General Services Administration	
Specification Office, Rm. 6662, 7th and D St., SW., Washington, DC 20407	
Federal Specification RR–C–901C, Cylinders, Compressed Gas: High Pressure, Steet DOT 3AA, and Aluminum Applications, January 15, 1981.	172.302; 173.304; 173.336
Institute of Electrical and Electronic Engineers (IEEE)	
IEEE Service Center, 445 Hoes Lane, Piscataway, NJ 08854	
IEEE Std. 45–1983, Recommended Practice for Electric Installations on Shipboard, 1983.	111.05–7; 111.15–2(b); 111.30–1; 111,30–5(a); 111.30–19(a); 111.33–3(a); 111.33–5(a); 111.40–1; 111.60–1(a); 111.60–2; 111.60–3; 111.60–5(a); 111.60–6(a); 111.60–11(c); 111.60–13(a); 111.60–19(b); 111.60–21; 111.75–5(b); 111.105–3; 111.105–31(e); 111.105–41; 111.107–1(c); 113.65–5
Institute of Makers of Explosives (IME)	
1120 19th Street, NW., Suite 310, Washington, DC 20036	
IME Safety Library Publication No. 22 (IME Standard 22), Recommendation for the Safe Transportation of Detonators in a Vehicle with Certain Other Explosive Materials, May 1993.	177.835
International Atomic Energy Agency (IAEA)	
Wagramerstrasse 5, P.O. Box 100, A–1400, Vienna, Austria	
IAEA, Regulations for the Safe Transport of Radioactive Materials, Safety Series No. 6, 1985 (as amended 1990).	171.12; 173.416; 173.417; 173.473; 173.476

49 CFR (PARTS 100–185)—Continued

RESEARCH AND SPECIAL PROGRAMS ADMINISTRATION, DEPARTMENT OF TRANSPORTATION (HAZARDOUS MATERIALS REGULATIONS)—Continued

	49 CFR
International Civil Aviation Organization (ICAO)	
P.O. Box 400, Place de l'Aviation Internationale, 1000 Sherbrooke Street West, Montreal, Quebec, Canada H3A 2R2	
Technical Instructions for the Safe Transport of Dangerous Goods by Air, 1995–1996 Edition.	171.7; 171.11; 172.401
ICAO Technical Instructions for the Safe Transport of Dangerous Goods by Air, 1997–1998 Edition.	171.11; 172.401
ICAO Technical Instructions also available from INTEREG, P.O. Box 60105, Chicago, IL 60660	
International Maritime Organization	
4 Albert Embankment, London, SE17SR, England	
IMO Sales, New York Nautical Instrument and Service Corp., 140 W. Broadway, New York, NY 10013	
IMO International Maritime Dangerous Goods (IMDG) Code, 1990 Consolidated Edition as amended by Amendment 27 (1994) (English edition).	171.12; 172.401; 172.407; 173.21; 176.2; 176.5; 176.11; 176.27; 176.30
IMO International Maritime Dangerous Goods (IMDG) Code, 1994 Consolidated Edition, as amended by Amendment 28 (1996) (English edition).	171.12; 172.401; 172.407; 176.2; 176.5; 176.11; 176.27; 176.30
International Organization for Standardization (ISO)	
Case Postale 56, CH–1211, Geneve 20, Switzerland	
Also available from ANSI, 1430 Broadway, New York, NY 10018.	
ISO TR 4826–1979(E), Sealed Radioactive Sources—Leak Test Methods.	173.469
ISO 82–1974(E) Steel Tensile Testing	178.270–3
ISO 535–1991(E) Paper and Board—Determination of Water Absorptiveness—Cobb Method.	171.7; 178.516
ISO 780–1985 Packaging-Pictorial marking for handling of goods	172.312
ISO 1496–3: 1995(E), Series 1 Freight Containers—Specification and Testing—Part 3, Tank Containers for Liquids, Gases and Pressurized Dry Bulk.	173.411
ISO 2431–84(E) Standard Cup Method	173.121
ISO 2592–1973(E) Petroleum products—Determination of flash and fire points—Cleveland open cup method.	171.7; 173.120
ISO 2919–1980(E), Sealed Radioactive Sources—Classification	173.469
ISO 3036–1975(E), Board-Determination of Puncture Resistance	171.7; 178.708
ISO 3574–1986(E) Cold-reduced carbon steel sheet of commercial and drawing qualities.	171.7; 178.503
ISO 9328–1–1991(E) Steel plates and strips for pressure purposes—Technical delivery conditions—Part 1; General requirements.	171.7; 173.137
National Board of Boiler and Pressure Vessel Inspectors	
1055 Crupper Avenue, Columbus, OH 43229	
National Board Inspection Code, A Manual for Boiler and Pressure Inspectors, NB–23, 1992 Edition.	171.1; 180.413
National Fire Protection Association	
1 Batterymarch Park, Quincy, MA 02269-9101, FAX (617) 770-3500	
NFPA Pamphlet No. 58—Standard for the Storage and Handling of Liquefied Petroleum Gases, 1979.	173.315

Material Approved for Incorporation by Reference

49 CFR (PARTS 100–185)—Continued

RESEARCH AND SPECIAL PROGRAMS ADMINISTRATION, DEPARTMENT OF TRANSPORTATION (HAZARDOUS MATERIALS REGULATIONS)—Continued

	49 CFR
National Institute of Standards and Technology, Department of Commerce 5285 Port Royal Rd., Springfield, VA 22151	
NSB Handbook H–28 (1957), 1957 Handbook of Screw-Thread Standards for Federal Services, Part II, December 1966 Ed.	171.1; 178.45; 178.46
National Motor Freight Traffic Ass'n, Inc. Agent, 1616 P Street, NW., Washington, DC 20036	
National Motor Freight Classification NMF 100–I, 1982	177.841
Organization for Economic Cooperation and Development (OECD) OECD Publications and Information Center, 2001 L Street, Suite 700, Washington, DC 20036	
OECD Guideline for Testing of Chemicals, No. 404, ''Acute Dermal Irritation/Corrosion,'' 1992.	171.7; 173.137
Transport Canada TDG Canadian Government Publishing Center, Supply and Services, Canada, Ottawa, Ontario, Canada K1A0S9	
Transportation of Dangerous Goods Regulations, as of July 1, 1985, including Registration Numbers SOR/85–314, SOR/85–585, SOR/85–609, SOR/86–526, SOR/88–635, SOR/87–335, SOR/87–186, SOR/89–39, SOR/89–294, SOR/90–847, SOR/91–711, SOR/91–712, SOR/92–447, SOR/92–600, SOR/93–203, SOR/93–274, SOR/93–525, SOR/94–146, and SOR/94–264, SOR/95–241 and SOR/95–547 (English edition).	171.7; 171.12a; 172.401; 172.502; 174.11
Truck Trailer Manufacturers Association 1020 Princess Street, Alexandria, VA 22314	
TTMA RP No. 61–94, Performance of Manhole and/or Fill Opening Assemblies on MC 306 and DOT 406 Cargo Tanks, December 28, 1994 edition.	171.7
TTMA RP No. 81, Performance of Spring Loaded Pressure Relief Valves on MC 306, MC 307, and MC 312 Tanks, 1989 Edition.	171.7; 178.345–10
TTMA Technical Bulletin No. 107–89 Procedure for Testing In-Service, Unmarked, and/or Uncertified MC 306 Type Cargo Tank Manhole Covers, May 24, 1989 edition.	180.405
United Nations United Nations Sales Section, New York, NY 10017	
UN Recommendations of the Transport of Dangerous Goods, Sixth Revised Edition (1989).	172.401; 172.407; 172.519
UN Recommendations on the Transport of Dangerous Goods, Eighth Revised Edition (1993).	171.7; 172.401; 172.407; 172.519
UN Recommendations on the Transport of Dangerous Goods, Ninth Revised Edition (1995).	171.7; 172.401; 172.407; 172.519

Table of CFR Titles and Chapters

(Revised as of September 30, 1997)

Title 1—General Provisions

I Administrative Committee of the Federal Register (Parts 1—49)
II Office of the Federal Register (Parts 50—299)
IV Miscellaneous Agencies (Parts 400—500)

Title 2—[Reserved]

Title 3—The President

I Executive Office of the President (Parts 100—199)

Title 4—Accounts

I General Accounting Office (Parts 1—99)
II Federal Claims Collection Standards (General Accounting Office—Department of Justice) (Parts 100—299)

Title 5—Administrative Personnel

I Office of Personnel Management (Parts 1—1199)
II Merit Systems Protection Board (Parts 1200—1299)
III Office of Management and Budget (Parts 1300—1399)
IV Advisory Committee on Federal Pay (Parts 1400—1499)
V The International Organizations Employees Loyalty Board (Parts 1500—1599)
VI Federal Retirement Thrift Investment Board (Parts 1600—1699)
VII Advisory Commission on Intergovernmental Relations (Parts 1700—1799)
VIII Office of Special Counsel (Parts 1800—1899)
IX Appalachian Regional Commission (Parts 1900—1999)
XI Armed Forces Retirement Home (Part 2100)
XIV Federal Labor Relations Authority, General Counsel of the Federal Labor Relations Authority and Federal Service Impasses Panel (Parts 2400—2499)
XV Office of Administration, Executive Office of the President (Parts 2500—2599)
XVI Office of Government Ethics (Parts 2600—2699)
XXI Department of the Treasury (Parts 3100—3199)
XXII Federal Deposit Insurance Corporation (Part 3201)
XXIII Department of Energy (Part 3301)

Title 5—Administrative Personnel—Continued

Chap.	
XXIV	Federal Energy Regulatory Commission (Part 3401)
XXVI	Department of Defense (Part 3601)
XXVIII	Department of Justice (Part 3801)
XXIX	Federal Communications Commission (Parts 3900—3999)
XXX	Farm Credit System Insurance Corporation (Parts 4000—4099)
XXXI	Farm Credit Administration (Parts 4100—4199)
XXXIII	Overseas Private Investment Corporation (Part 4301)
XXXV	Office of Personnel Management (Part 4501)
XL	Interstate Commerce Commission (Part 5001)
XLI	Commodity Futures Trading Commission (Part 5101)
XLII	Department of Labor (Part 5201)
XLIII	National Science Foundation (Part 5301)
XLV	Department of Health and Human Services (Part 5501)
XLVI	Postal Rate Commission (Part 5601)
XLVII	Federal Trade Commission (Part 5701)
XLVIII	Nuclear Regulatory Commission (Part 5801)
L	Department of Transportation (Part 6001)
LII	Export-Import Bank of the United States (Part 6201)
LIII	Department of Education (Parts 6300—6399)
LIV	Environmental Protection Agency (Part 6401)
LVII	General Services Administration (Part 6701)
LVIII	Board of Governors of the Federal Reserve System (Part 6801)
LIX	National Aeronautics and Space Administration (Part 6901)
LX	United States Postal Service (Part 7001)
LXI	National Labor Relations Board (Part 7101)
LXII	Equal Employment Opportunity Commission (Part 7201)
LXIII	Inter-American Foundation (Part 7301)
LXV	Department of Housing and Urban Development (Part 7501)
LXVI	National Archives and Records Administration (Part 7601)
LXIX	Tennessee Valley Authority (Part 7901)
LXXI	Consumer Product Safety Commission (Part 8101)
LXXIV	Federal Mine Safety and Health Review Commission (Part 8401)
LXXVI	Federal Retirement Thrift Investment Board (Part 8601)
LXXVII	Office of Management and Budget (Part 8701)

Title 6—[Reserved]

Title 7—Agriculture

SUBTITLE A—Office of the Secretary of Agriculture (Parts 0—26)

SUBTITLE B—Regulations of the Department of Agriculture

I Agricultural Marketing Service (Standards, Inspections, Marketing Practices), Department of Agriculture (Parts 27—209)

II Food and Consumer Service, Department of Agriculture (Parts 210—299)

Title 7—Agriculture—Continued

Chap.	
III	Animal and Plant Health Inspection Service, Department of Agriculture (Parts 300—399)
IV	Federal Crop Insurance Corporation, Department of Agriculture (Parts 400—499)
V	Agricultural Research Service, Department of Agriculture (Parts 500—599)
VI	Natural Resources Conservation Service, Department of Agriculture (Parts 600—699)
VII	Farm Service Agency, Department of Agriculture (Parts 700—799)
VIII	Grain Inspection, Packers and Stockyards Administration (Federal Grain Inspection Service), Department of Agriculture (Parts 800—899)
IX	Agricultural Marketing Service (Marketing Agreements and Orders; Fruits, Vegetables, Nuts), Department of Agriculture (Parts 900—999)
X	Agricultural Marketing Service (Marketing Agreements and Orders; Milk), Department of Agriculture (Parts 1000—1199)
XI	Agricultural Marketing Service (Marketing Agreements and Orders; Miscellaneous Commodities), Department of Agriculture (Parts 1200—1299)
XIII	Northeast Dairy Compact Commission (Parts 1300—1399)
XIV	Commodity Credit Corporation, Department of Agriculture (Parts 1400—1499)
XV	Foreign Agricultural Service, Department of Agriculture (Parts 1500—1599)
XVI	Rural Telephone Bank, Department of Agriculture (Parts 1600—1699)
XVII	Rural Utilities Service, Department of Agriculture (Parts 1700—1799)
XVIII	Rural Housing Service, Rural Business-Cooperative Service, Rural Utilities Service, and Farm Service Agency, Department of Agriculture (Parts 1800—2099)
XXVI	Office of Inspector General, Department of Agriculture (Parts 2600—2699)
XXVII	Office of Information Resources Management, Department of Agriculture (Parts 2700—2799)
XXVIII	Office of Operations, Department of Agriculture (Parts 2800—2899)
XXIX	Office of Energy, Department of Agriculture (Parts 2900—2999)
XXX	Office of the Chief Financial Officer, Department of Agriculture (Parts 3000—3099)
XXXI	Office of Environmental Quality, Department of Agriculture (Parts 3100—3199)
XXXII	[Reserved]
XXXIII	Office of Transportation, Department of Agriculture (Parts 3300—3399)
XXXIV	Cooperative State Research, Education, and Extension Service, Department of Agriculture (Parts 3400—3499)
XXXV	Rural Housing Service, Department of Agriculture (Parts 3500—3599)

Title 7—Agriculture—Continued

Chap.

XXXVI National Agricultural Statistics Service, Department of Agriculture (Parts 3600—3699)

XXXVII Economic Research Service, Department of Agriculture (Parts 3700—3799)

XXXVIII World Agricultural Outlook Board, Department of Agriculture (Parts 3800—3899)

XLI [Reserved]

XLII Rural Business-Cooperative Service and Rural Utilities Service, Department of Agriculture (Parts 4200—4299)

Title 8—Aliens and Nationality

I Immigration and Naturalization Service, Department of Justice (Parts 1—499)

Title 9—Animals and Animal Products

I Animal and Plant Health Inspection Service, Department of Agriculture (Parts 1—199)

II Grain Inspection, Packers and Stockyards Administration (Packers and Stockyards Programs), Department of Agriculture (Parts 200—299)

III Food Safety and Inspection Service, Meat and Poultry Inspection, Department of Agriculture (Parts 300—599)

Title 10—Energy

I Nuclear Regulatory Commission (Parts 0—199)

II Department of Energy (Parts 200—699)

III Department of Energy (Parts 700—999)

X Department of Energy (General Provisions) (Parts 1000—1099)

XI United States Enrichment Corporation (Parts 1100—1199)

XV Office of the Federal Inspector for the Alaska Natural Gas Transportation System (Parts 1500—1599)

XVII Defense Nuclear Facilities Safety Board (Parts 1700—1799)

Title 11—Federal Elections

I Federal Election Commission (Parts 1—9099)

Title 12—Banks and Banking

I Comptroller of the Currency, Department of the Treasury (Parts 1—199)

II Federal Reserve System (Parts 200—299)

III Federal Deposit Insurance Corporation (Parts 300—399)

IV Export-Import Bank of the United States (Parts 400—499)

V Office of Thrift Supervision, Department of the Treasury (Parts 500—599)

VI Farm Credit Administration (Parts 600—699)

VII National Credit Union Administration (Parts 700—799)

Title 12—Banks and Banking—Continued

Chap.

VIII Federal Financing Bank (Parts 800—899)

IX Federal Housing Finance Board (Parts 900—999)

XI Federal Financial Institutions Examination Council (Parts 1100—1199)

XIV Farm Credit System Insurance Corporation (Parts 1400—1499)

XV Thrift Depositor Protection Oversight Board (Parts 1500—1599)

XVII Office of Federal Housing Enterprise Oversight, Department of Housing and Urban Development (Parts 1700-1799)

XVIII Community Development Financial Institutions Fund, Department of the Treasury (Parts 1800—1899)

Title 13—Business Credit and Assistance

I Small Business Administration (Parts 1—199)

III Economic Development Administration, Department of Commerce (Parts 300—399)

Title 14—Aeronautics and Space

I Federal Aviation Administration, Department of Transportation (Parts 1—199)

II Office of the Secretary, Department of Transportation (Aviation Proceedings) (Parts 200—399)

III Commercial Space Transportation, Federal Aviation Administration, Department of Transportation (Parts 400—499)

V National Aeronautics and Space Administration (Parts 1200—1299)

Title 15—Commerce and Foreign Trade

SUBTITLE A—Office of the Secretary of Commerce (Parts 0—29)

SUBTITLE B—Regulations Relating to Commerce and Foreign Trade

I Bureau of the Census, Department of Commerce (Parts 30—199)

II National Institute of Standards and Technology, Department of Commerce (Parts 200—299)

III International Trade Administration, Department of Commerce (Parts 300—399)

IV Foreign-Trade Zones Board, Department of Commerce (Parts 400—499)

VII Bureau of Export Administration, Department of Commerce (Parts 700—799)

VIII Bureau of Economic Analysis, Department of Commerce (Parts 800—899)

IX National Oceanic and Atmospheric Administration, Department of Commerce (Parts 900—999)

XI Technology Administration, Department of Commerce (Parts 1100—1199)

XIII East-West Foreign Trade Board (Parts 1300—1399)

XIV Minority Business Development Agency (Parts 1400—1499)

Title 15—Commerce and Foreign Trade—Continued

Chap.

SUBTITLE C—Regulations Relating to Foreign Trade Agreements

XX Office of the United States Trade Representative (Parts 2000—2099)

SUBTITLE D—Regulations Relating to Telecommunications and Information

XXIII National Telecommunications and Information Administration, Department of Commerce (Parts 2300—2399)

Title 16—Commercial Practices

I Federal Trade Commission (Parts 0—999)

II Consumer Product Safety Commission (Parts 1000—1799)

Title 17—Commodity and Securities Exchanges

I Commodity Futures Trading Commission (Parts 1—199)

II Securities and Exchange Commission (Parts 200—399)

IV Department of the Treasury (Parts 400—499)

Title 18—Conservation of Power and Water Resources

I Federal Energy Regulatory Commission, Department of Energy (Parts 1—399)

III Delaware River Basin Commission (Parts 400—499)

VI Water Resources Council (Parts 700—799)

VIII Susquehanna River Basin Commission (Parts 800—899)

XIII Tennessee Valley Authority (Parts 1300—1399)

Title 19—Customs Duties

I United States Customs Service, Department of the Treasury (Parts 1—199)

II United States International Trade Commission (Parts 200—299)

III International Trade Administration, Department of Commerce (Parts 300—399)

Title 20—Employees' Benefits

I Office of Workers' Compensation Programs, Department of Labor (Parts 1—199)

II Railroad Retirement Board (Parts 200—399)

III Social Security Administration (Parts 400—499)

IV Employees' Compensation Appeals Board, Department of Labor (Parts 500—599)

V Employment and Training Administration, Department of Labor (Parts 600—699)

VI Employment Standards Administration, Department of Labor (Parts 700—799)

VII Benefits Review Board, Department of Labor (Parts 800—899)

VIII Joint Board for the Enrollment of Actuaries (Parts 900—999)

Title 20—Employees' Benefits—Continued

Chap.

IX Office of the Assistant Secretary for Veterans' Employment and Training, Department of Labor (Parts 1000—1099)

Title 21—Food and Drugs

I Food and Drug Administration, Department of Health and Human Services (Parts 1—1299)

II Drug Enforcement Administration, Department of Justice (Parts 1300—1399)

III Office of National Drug Control Policy (Parts 1400—1499)

Title 22—Foreign Relations

I Department of State (Parts 1—199)

II Agency for International Development, International Development Cooperation Agency (Parts 200—299)

III Peace Corps (Parts 300—399)

IV International Joint Commission, United States and Canada (Parts 400—499)

V United States Information Agency (Parts 500—599)

VI United States Arms Control and Disarmament Agency (Parts 600—699)

VII Overseas Private Investment Corporation, International Development Cooperation Agency (Parts 700—799)

IX Foreign Service Grievance Board Regulations (Parts 900—999)

X Inter-American Foundation (Parts 1000—1099)

XI International Boundary and Water Commission, United States and Mexico, United States Section (Parts 1100—1199)

XII United States International Development Cooperation Agency (Parts 1200—1299)

XIII Board for International Broadcasting (Parts 1300—1399)

XIV Foreign Service Labor Relations Board; Federal Labor Relations Authority; General Counsel of the Federal Labor Relations Authority; and the Foreign Service Impasse Disputes Panel (Parts 1400—1499)

XV African Development Foundation (Parts 1500—1599)

XVI Japan-United States Friendship Commission (Parts 1600—1699)

XVII United States Institute of Peace (Parts 1700—1799)

Title 23—Highways

I Federal Highway Administration, Department of Transportation (Parts 1—999)

II National Highway Traffic Safety Administration and Federal Highway Administration, Department of Transportation (Parts 1200—1299)

III National Highway Traffic Safety Administration, Department of Transportation (Parts 1300—1399)

Title 24—Housing and Urban Development

Chap.

SUBTITLE A—Office of the Secretary, Department of Housing and Urban Development (Parts 0—99)

SUBTITLE B—Regulations Relating to Housing and Urban Development

I Office of Assistant Secretary for Equal Opportunity, Department of Housing and Urban Development (Parts 100—199)

II Office of Assistant Secretary for Housing-Federal Housing Commissioner, Department of Housing and Urban Development (Parts 200—299)

III Government National Mortgage Association, Department of Housing and Urban Development (Parts 300—399)

V Office of Assistant Secretary for Community Planning and Development, Department of Housing and Urban Development (Parts 500—599)

VI Office of Assistant Secretary for Community Planning and Development, Department of Housing and Urban Development (Parts 600—699) [Reserved]

VII Office of the Secretary, Department of Housing and Urban Development (Housing Assistance Programs and Public and Indian Housing Programs) (Parts 700—799)

VIII Office of the Assistant Secretary for Housing—Federal Housing Commissioner, Department of Housing and Urban Development (Section 8 Housing Assistance Programs and Section 202 Direct Loan Program) (Parts 800—899)

IX Office of Assistant Secretary for Public and Indian Housing, Department of Housing and Urban Development (Parts 900—999)

X Office of Assistant Secretary for Housing—Federal Housing Commissioner, Department of Housing and Urban Development (Interstate Land Sales Registration Program) (Parts 1700—1799)

XII Office of Inspector General, Department of Housing and Urban Development (Parts 2000—2099)

XX Office of Assistant Secretary for Housing—Federal Housing Commissioner, Department of Housing and Urban Development (Parts 3200—3899)

XXV Neighborhood Reinvestment Corporation (Parts 4100—4199)

Title 25—Indians

I Bureau of Indian Affairs, Department of the Interior (Parts 1—299)

II Indian Arts and Crafts Board, Department of the Interior (Parts 300—399)

III National Indian Gaming Commission, Department of the Interior (Parts 500—599)

IV Office of Navajo and Hopi Indian Relocation (Parts 700—799)

V Bureau of Indian Affairs, Department of the Interior, and Indian Health Service, Department of Health and Human Services (Part 900)

VI Office of the Assistant Secretary-Indian Affairs, Department of the Interior (Part 1001)

Title 25—Indians—Continued

Chap.

VII Office of the Special Trustee for American Indians, Department of the Interior (Part 1200)

Title 26—Internal Revenue

I Internal Revenue Service, Department of the Treasury (Parts 1—799)

Title 27—Alcohol, Tobacco Products and Firearms

I Bureau of Alcohol, Tobacco and Firearms, Department of the Treasury (Parts 1—299)

Title 28—Judicial Administration

I Department of Justice (Parts 0—199)

III Federal Prison Industries, Inc., Department of Justice (Parts 300—399)

V Bureau of Prisons, Department of Justice (Parts 500—599)

VI Offices of Independent Counsel, Department of Justice (Parts 600—699)

VII Office of Independent Counsel (Parts 700—799)

Title 29—Labor

SUBTITLE A—Office of the Secretary of Labor (Parts 0—99)

SUBTITLE B—Regulations Relating to Labor

I National Labor Relations Board (Parts 100—199)

II Office of Labor-Management Standards, Department of Labor (Parts 200—299)

III National Railroad Adjustment Board (Parts 300—399)

IV Office of Labor-Management Standards, Department of Labor (Parts 400—499)

V Wage and Hour Division, Department of Labor (Parts 500—899)

IX Construction Industry Collective Bargaining Commission (Parts 900—999)

X National Mediation Board (Parts 1200—1299)

XII Federal Mediation and Conciliation Service (Parts 1400—1499)

XIV Equal Employment Opportunity Commission (Parts 1600—1699)

XVII Occupational Safety and Health Administration, Department of Labor (Parts 1900—1999)

XX Occupational Safety and Health Review Commission (Parts 2200—2499)

XXV Pension and Welfare Benefits Administration, Department of Labor (Parts 2500—2599)

XXVII Federal Mine Safety and Health Review Commission (Parts 2700—2799)

XL Pension Benefit Guaranty Corporation (Parts 4000—4999)

Title 30—Mineral Resources

Chap.

I Mine Safety and Health Administration, Department of Labor (Parts 1—199)

II Minerals Management Service, Department of the Interior (Parts 200—299)

III Board of Surface Mining and Reclamation Appeals, Department of the Interior (Parts 300—399)

IV Geological Survey, Department of the Interior (Parts 400—499)

VI Bureau of Mines, Department of the Interior (Parts 600—699)

VII Office of Surface Mining Reclamation and Enforcement, Department of the Interior (Parts 700—999)

Title 31—Money and Finance: Treasury

SUBTITLE A—Office of the Secretary of the Treasury (Parts 0—50)

SUBTITLE B—Regulations Relating to Money and Finance

I Monetary Offices, Department of the Treasury (Parts 51—199)

II Fiscal Service, Department of the Treasury (Parts 200—399)

IV Secret Service, Department of the Treasury (Parts 400—499)

V Office of Foreign Assets Control, Department of the Treasury (Parts 500—599)

VI Bureau of Engraving and Printing, Department of the Treasury (Parts 600—699)

VII Federal Law Enforcement Training Center, Department of the Treasury (Parts 700—799)

VIII Office of International Investment, Department of the Treasury (Parts 800—899)

Title 32—National Defense

SUBTITLE A—Department of Defense

I Office of the Secretary of Defense (Parts 1—399)

V Department of the Army (Parts 400—699)

VI Department of the Navy (Parts 700—799)

VII Department of the Air Force (Parts 800—1099)

SUBTITLE B—Other Regulations Relating to National Defense

XII Defense Logistics Agency (Parts 1200—1299)

XVI Selective Service System (Parts 1600—1699)

XIX Central Intelligence Agency (Parts 1900—1999)

XX Information Security Oversight Office, National Archives and Records Administration (Parts 2000—2099)

XXI National Security Council (Parts 2100—2199)

XXIV Office of Science and Technology Policy (Parts 2400—2499)

XXVII Office for Micronesian Status Negotiations (Parts 2700—2799)

XXVIII Office of the Vice President of the United States (Parts 2800—2899)

XXIX Presidential Commission on the Assignment of Women in the Armed Forces (Part 2900)

Title 33—Navigation and Navigable Waters

Chap.

I Coast Guard, Department of Transportation (Parts 1—199)

II Corps of Engineers, Department of the Army (Parts 200—399)

IV Saint Lawrence Seaway Development Corporation, Department of Transportation (Parts 400—499)

Title 34—Education

SUBTITLE A—Office of the Secretary, Department of Education (Parts 1—99)

SUBTITLE B—Regulations of the Offices of the Department of Education

I Office for Civil Rights, Department of Education (Parts 100—199)

II Office of Elementary and Secondary Education, Department of Education (Parts 200—299)

III Office of Special Education and Rehabilitative Services, Department of Education (Parts 300—399)

IV Office of Vocational and Adult Education, Department of Education (Parts 400—499)

V Office of Bilingual Education and Minority Languages Affairs, Department of Education (Parts 500—599)

VI Office of Postsecondary Education, Department of Education (Parts 600—699)

VII Office of Educational Research and Improvement, Department of Education (Parts 700—799)

XI National Institute for Literacy (Parts 1100-1199)

SUBTITLE C—Regulations Relating to Education

XII National Council on Disability (Parts 1200—1299)

Title 35—Panama Canal

I Panama Canal Regulations (Parts 1—299)

Title 36—Parks, Forests, and Public Property

I National Park Service, Department of the Interior (Parts 1—199)

II Forest Service, Department of Agriculture (Parts 200—299)

III Corps of Engineers, Department of the Army (Parts 300—399)

IV American Battle Monuments Commission (Parts 400—499)

V Smithsonian Institution (Parts 500—599)

VII Library of Congress (Parts 700—799)

VIII Advisory Council on Historic Preservation (Parts 800—899)

IX Pennsylvania Avenue Development Corporation (Parts 900—999)

XI Architectural and Transportation Barriers Compliance Board (Parts 1100—1199)

XII National Archives and Records Administration (Parts 1200—1299)

XIV Assassination Records Review Board (Parts 1400-1499)

Title 37—Patents, Trademarks, and Copyrights

Chap.

I Patent and Trademark Office, Department of Commerce (Parts 1—199)

II Copyright Office, Library of Congress (Parts 200—299)

IV Assistant Secretary for Technology Policy, Department of Commerce (Parts 400—499)

V Under Secretary for Technology, Department of Commerce (Parts 500—599)

Title 38—Pensions, Bonuses, and Veterans' Relief

I Department of Veterans Affairs (Parts 0—99)

Title 39—Postal Service

I United States Postal Service (Parts 1—999)

III Postal Rate Commission (Parts 3000—3099)

Title 40—Protection of Environment

I Environmental Protection Agency (Parts 1—799)

V Council on Environmental Quality (Parts 1500—1599)

Title 41—Public Contracts and Property Management

SUBTITLE B—Other Provisions Relating to Public Contracts

50 Public Contracts, Department of Labor (Parts 50–1—50–999)

51 Committee for Purchase From People Who Are Blind or Severely Disabled (Parts 51–1—51–99)

60 Office of Federal Contract Compliance Programs, Equal Employment Opportunity, Department of Labor (Parts 60–1—60–999)

61 Office of the Assistant Secretary for Veterans Employment and Training, Department of Labor (Parts 61–1—61–999)

SUBTITLE C—Federal Property Management Regulations System

101 Federal Property Management Regulations (Parts 101–1—101–99)

105 General Services Administration (Parts 105–1—105–999)

109 Department of Energy Property Management Regulations (Parts 109–1—109–99)

114 Department of the Interior (Parts 114–1—114–99)

115 Environmental Protection Agency (Parts 115–1—115–99)

128 Department of Justice (Parts 128–1—128–99)

SUBTITLE D—Other Provisions Relating to Property Management [Reserved]

SUBTITLE E—Federal Information Resources Management Regulations System

201 Federal Information Resources Management Regulation (Parts 201–1—201–99) [Reserved]

SUBTITLE F—Federal Travel Regulation System

301 Travel Allowances (Parts 301–1—301–99)

302 Relocation Allowances (Parts 302–1—302–99)

Title 41—Public Contracts and Property Management—Continued

Chap.

303 Payment of Expenses Connected with the Death of Certain Employees (Parts 303–1—303–2)

304 Payment from a Non-Federal Source for Travel Expenses (Parts 304–1—304–99)

Title 42—Public Health

I Public Health Service, Department of Health and Human Services (Parts 1—199)

IV Health Care Financing Administration, Department of Health and Human Services (Parts 400—499)

V Office of Inspector General-Health Care, Department of Health and Human Services (Parts 1000—1999)

Title 43—Public Lands: Interior

SUBTITLE A—Office of the Secretary of the Interior (Parts 1—199)

SUBTITLE B—Regulations Relating to Public Lands

I Bureau of Reclamation, Department of the Interior (Parts 200—499)

II Bureau of Land Management, Department of the Interior (Parts 1000—9999)

III Utah Reclamation Mitigation and Conservation Commission (Parts 10000—10005)

Title 44—Emergency Management and Assistance

I Federal Emergency Management Agency (Parts 0—399)

IV Department of Commerce and Department of Transportation (Parts 400—499)

Title 45—Public Welfare

SUBTITLE A—Department of Health and Human Services (Parts 1—199)

SUBTITLE B—Regulations Relating to Public Welfare

II Office of Family Assistance (Assistance Programs), Administration for Children and Families, Department of Health and Human Services (Parts 200—299)

III Office of Child Support Enforcement (Child Support Enforcement Program), Administration for Children and Families, Department of Health and Human Services (Parts 300—399)

IV Office of Refugee Resettlement, Administration for Children and Families Department of Health and Human Services (Parts 400—499)

V Foreign Claims Settlement Commission of the United States, Department of Justice (Parts 500—599)

VI National Science Foundation (Parts 600—699)

VII Commission on Civil Rights (Parts 700—799)

VIII Office of Personnel Management (Parts 800—899)

Title 45—Public Welfare—Continued

Chap.

X Office of Community Services, Administration for Children and Families, Department of Health and Human Services (Parts 1000—1099)

XI National Foundation on the Arts and the Humanities (Parts 1100—1199)

XII ACTION (Parts 1200—1299)

XIII Office of Human Development Services, Department of Health and Human Services (Parts 1300—1399)

XVI Legal Services Corporation (Parts 1600—1699)

XVII National Commission on Libraries and Information Science (Parts 1700—1799)

XVIII Harry S. Truman Scholarship Foundation (Parts 1800—1899)

XXI Commission on Fine Arts (Parts 2100—2199)

XXII Christopher Columbus Quincentenary Jubilee Commission (Parts 2200—2299)

XXIII Arctic Research Commission (Part 2301)

XXIV James Madison Memorial Fellowship Foundation (Parts 2400—2499)

XXV Corporation for National and Community Service (Parts 2500—2599)

Title 46—Shipping

I Coast Guard, Department of Transportation (Parts 1—199)

II Maritime Administration, Department of Transportation (Parts 200—399)

IV Federal Maritime Commission (Parts 500—599)

Title 47—Telecommunication

I Federal Communications Commission (Parts 0—199)

II Office of Science and Technology Policy and National Security Council (Parts 200—299)

III National Telecommunications and Information Administration, Department of Commerce (Parts 300—399)

Title 48—Federal Acquisition Regulations System

1 Federal Acquisition Regulation (Parts 1—99)

2 Department of Defense (Parts 200—299)

3 Department of Health and Human Services (Parts 300—399)

4 Department of Agriculture (Parts 400—499)

5 General Services Administration (Parts 500—599)

6 Department of State (Parts 600—699)

7 United States Agency for International Development (Parts 700—799)

8 Department of Veterans Affairs (Parts 800—899)

9 Department of Energy (Parts 900—999)

10 Department of the Treasury (Parts 1000—1099)

Title 48—Federal Acquisition Regulations System—Continued

Chap.

12 Department of Transportation (Parts 1200—1299)

13 Department of Commerce (Parts 1300—1399)

14 Department of the Interior (Parts 1400—1499)

15 Environmental Protection Agency (Parts 1500—1599)

16 Office of Personnel Management Federal Employees Health Benefits Acquisition Regulation (Parts 1600—1699)

17 Office of Personnel Management (Parts 1700—1799)

18 National Aeronautics and Space Administration (Parts 1800—1899)

19 United States Information Agency (Parts 1900—1999)

20 Nuclear Regulatory Commission (Parts 2000—2099)

21 Office of Personnel Management, Federal Employees Group Life Insurance Federal Acquisition Regulation (Parts 2100—2199)

23 Social Security Administration (Parts 2300—2399)

24 Department of Housing and Urban Development (Parts 2400—2499)

25 National Science Foundation (Parts 2500—2599)

28 Department of Justice (Parts 2800—2899)

29 Department of Labor (Parts 2900—2999)

34 Department of Education Acquisition Regulation (Parts 3400—3499)

35 Panama Canal Commission (Parts 3500—3599)

44 Federal Emergency Management Agency (Parts 4400—4499)

51 Department of the Army Acquisition Regulations (Parts 5100—5199)

52 Department of the Navy Acquisition Regulations (Parts 5200—5299)

53 Department of the Air Force Federal Acquisition Regulation Supplement (Parts 5300—5399)

54 Defense Logistics Agency, Department of Defense (Part 5452)

57 African Development Foundation (Parts 5700—5799)

61 General Services Administration Board of Contract Appeals (Parts 6100—6199)

63 Department of Transportation Board of Contract Appeals (Parts 6300—6399)

99 Cost Accounting Standards Board, Office of Federal Procurement Policy, Office of Management and Budget (Parts 9900—9999)

Title 49—Transportation

SUBTITLE A—Office of the Secretary of Transportation (Parts 1—99)

SUBTITLE B—Other Regulations Relating to Transportation

I Research and Special Programs Administration, Department of Transportation (Parts 100—199)

II Federal Railroad Administration, Department of Transportation (Parts 200—299)

Title 49—Transportation—Continued

Chap.

III Federal Highway Administration, Department of Transportation (Parts 300—399)

IV Coast Guard, Department of Transportation (Parts 400—499)

V National Highway Traffic Safety Administration, Department of Transportation (Parts 500—599)

VI Federal Transit Administration, Department of Transportation (Parts 600—699)

VII National Railroad Passenger Corporation (AMTRAK) (Parts 700—799)

VIII National Transportation Safety Board (Parts 800—999)

X Surface Transportation Board, Department of Transportation (Parts 1000—1399)

Title 50—Wildlife and Fisheries

I United States Fish and Wildlife Service, Department of the Interior (Parts 1—199)

II National Marine Fisheries Service, National Oceanic and Atmospheric Administration, Department of Commerce (Parts 200—299)

III International Fishing and Related Activities (Parts 300—399)

IV Joint Regulations (United States Fish and Wildlife Service, Department of the Interior and National Marine Fisheries Service, National Oceanic and Atmospheric Administration, Department of Commerce); Endangered Species Committee Regulations (Parts 400—499)

V Marine Mammal Commission (Parts 500—599)

VI Fishery Conservation and Management, National Oceanic and Atmospheric Administration, Department of Commerce (Parts 600—699)

CFR Index and Finding Aids

Subject/Agency Index

List of Agency Prepared Indexes

Parallel Tables of Statutory Authorities and Rules

Acts Requiring Publication in the Federal Register

List of CFR Titles, Chapters, Subchapters, and Parts

Alphabetical List of Agencies Appearing in the CFR

Alphabetical List of Agencies Appearing in the CFR

(Revised as of September 30, 1997)

Agency	CFR Title, Subtitle or Chapter
ACTION	45, XII
Administrative Committee of the Federal Register	1, I
Advanced Research Projects Agency	32, I
Advisory Commission on Intergovernmental Relations	5, VII
Advisory Committee on Federal Pay	5, IV
Advisory Council on Historic Preservation	36, VIII
African Development Foundation	22, XV
Federal Acquisition Regulation	48, 57
Agency for International Development, United States	22, II
Federal Acquisition Regulation	48, 7
Agricultural Marketing Service	7, I, IX, X, XI
Agricultural Research Service	7, V
Agriculture Department	
Agricultural Marketing Service	7, I, IX, X, XI
Agricultural Research Service	7, V
Animal and Plant Health Inspection Service	7, III; 9, I
Chief Financial Officer, Office of	7, XXX
Commodity Credit Corporation	7, XIV
Cooperative State Research, Education, and Extension Service	7, XXXIV
Economic Research Service	7, XXXVII
Energy, Office of	7, XXIX
Environmental Quality, Office of	7, XXXI
Farm Service Agency	7, VII, XVIII
Federal Acquisition Regulation	48, 4
Federal Crop Insurance Corporation	7, IV
Food and Consumer Service	7, II
Food Safety and Inspection Service	9, III
Foreign Agricultural Service	7, XV
Forest Service	36, II
Grain Inspection, Packers and Stockyards Administration	7, VIII; 9, II
Information Resources Management, Office of	7, XXVII
Inspector General, Office of	7, XXVI
National Agricultural Library	7, XLI
National Agricultural Statistics Service	7, XXXVI
Natural Resources Conservation Service	7, VI
Operations, Office of	7, XXVIII
Rural Business-Cooperative Service	7, XVIII, XLII
Rural Development Administration	7, XLII
Rural Housing Service	7, XVIII, XXXV
Rural Telephone Bank	7, XVI
Rural Utilities Service	7, XVII, XVIII, XLII
Secretary of Agriculture, Office of	7, Subtitle A
Transportation, Office of	7, XXXIII
World Agricultural Outlook Board	7, XXXVIII
Air Force Department	32, VII
Federal Acquisition Regulation Supplement	48, 53
Alaska Natural Gas Transportation System, Office of the Federal Inspector	10, XV
Alcohol, Tobacco and Firearms, Bureau of	27, I
AMTRAK	49, VII
American Battle Monuments Commission	36, IV
American Indians, Office of the Special Trustee	25, VII

Agency	CFR Title, Subtitle or Chapter
Animal and Plant Health Inspection Service	7, III; 9, I
Appalachian Regional Commission	5, IX
Architectural and Transportation Barriers Compliance Board	36, XI
Arctic Research Commission	45, XXIII
Armed Forces Retirement Home	5, XI
Arms Control and Disarmament Agency, United States	22, VI
Army Department	32, V
Engineers, Corps of	33, II; 36, III
Federal Acquisition Regulation	48, 51
Assassination Records Review Board	36, XIV
Benefits Review Board	20, VII
Bilingual Education and Minority Languages Affairs, Office of	34, V
Blind or Severely Disabled, Committee for Purchase From People Who Are	41, 51
Board for International Broadcasting	22, XIII
Census Bureau	15, I
Central Intelligence Agency	32, XIX
Chief Financial Officer, Office of	7, XXX
Child Support Enforcement, Office of	45, III
Children and Families, Administration for	45, II, III, IV, X
Christopher Columbus Quincentenary Jubilee Commission	45, XXII
Civil Rights, Commission on	45, VII
Civil Rights, Office for	34, I
Coast Guard	33, I; 46, I; 49, IV
Commerce Department	44, IV
Census Bureau	15, I‘
Economic Affairs, Under Secretary	37, V
Economic Analysis, Bureau of	15, VIII
Economic Development Administration	13, III
Emergency Management and Assistance	44, IV
Export Administration, Bureau of	15, VII
Federal Acquisition Regulation	48, 13
Fishery Conservation and Management	50, VI
Foreign-Trade Zones Board	15, IV
International Trade Administration	15, III; 19, III
National Institute of Standards and Technology	15, II
National Marine Fisheries Service	50, II, IV
National Oceanic and Atmospheric Administration	15, IX; 50, II, III, IV, VI
National Telecommunications and Information Administration	15, XXIII; 47, III
National Weather Service	15, IX
Patent and Trademark Office	37, I
Productivity, Technology and Innovation, Assistant Secretary for	37, IV
Secretary of Commerce, Office of	15, Subtitle A
Technology, Under Secretary for	37, V
Technology Administration	15, XI
Technology Policy, Assistant Secretary for	37, IV
Commercial Space Transportation	14, III
Commodity Credit Corporation	7, XIV
Commodity Futures Trading Commission	5, XLI; 17, I
Community Planning and Development, Office of Assistant Secretary for	24, V, VI
Community Services, Office of	45, X
Comptroller of the Currency	12, I
Construction Industry Collective Bargaining Commission	29, IX
Consumer Product Safety Commission	5, LXXI; 16, II
Cooperative State Research, Education, and Extension Service	7, XXXIV
Copyright Office	37, II
Cost Accounting Standards Board	48, 99
Council on Environmental Quality	40, V
Customs Service, United States	19, I
Defense Contract Audit Agency	32, I
Defense Department	5, XXVI; 32, Subtitle A
Advanced Research Projects Agency	32, I
Air Force Department	32, VII

Agency	CFR Title, Subtitle or Chapter
Army Department	32, V; 33, II; 36, III, 48, 51
Defense Intelligence Agency	32, I
Defense Logistics Agency	32, I, XII; 48, 54
Defense Mapping Agency	32, I
Engineers, Corps of	33, II; 36, III
Federal Acquisition Regulation	48, 2
Navy Department	32, VI; 48, 52
Secretary of Defense, Office of	32, I
Defense Contract Audit Agency	32, I
Defense Intelligence Agency	32, I
Defense Logistics Agency	32, XII; 48, 54
Defense Mapping Agency	32, I
Defense Nuclear Facilities Safety Board	10, XVII
Delaware River Basin Commission	18, III
Drug Enforcement Administration	21, II
East-West Foreign Trade Board	15, XIII
Economic Affairs, Under Secretary	37, V
Economic Analysis, Bureau of	15, VIII
Economic Development Administration	13, III
Economic Research Service	7, XXXVII
Education, Department of	5, LIII
Bilingual Education and Minority Languages Affairs, Office of	34, V
Civil Rights, Office for	34, I
Educational Research and Improvement, Office of	34, VII
Elementary and Secondary Education, Office of	34, II
Federal Acquisition Regulation	48, 34
Postsecondary Education, Office of	34, VI
Secretary of Education, Office of	34, Subtitle A
Special Education and Rehabilitative Services, Office of	34, III
Vocational and Adult Education, Office of	34, IV
Educational Research and Improvement, Office of	34, VII
Elementary and Secondary Education, Office of	34, II
Employees' Compensation Appeals Board	20, IV
Employees Loyalty Board	5, V
Employment and Training Administration	20, V
Employment Standards Administration	20, VI
Endangered Species Committee	50, IV
Energy, Department of	5, XXIII; 10, II, III, X
Federal Acquisition Regulation	48, 9
Federal Energy Regulatory Commission	5, XXIV; 18, I
Property Management Regulations	41, 109
Energy, Office of	7, XXIX
Engineers, Corps of	33, II; 36, III
Engraving and Printing, Bureau of	31, VI
Enrichment Corporation, United States	10, XI
Environmental Protection Agency	5, LIV; 40, I
Federal Acquisition Regulation	48, 15
Property Management Regulations	41, 115
Environmental Quality, Office of	7, XXXI
Equal Employment Opportunity Commission	5, LXII; 29, XIV
Equal Opportunity, Office of Assistant Secretary for	24, I
Executive Office of the President	3, I
Administration, Office of	5, XV
Environmental Quality, Council on	40, V
Management and Budget, Office of	25, III, LXXVII; 48, 99
National Drug Control Policy, Office of	21, III
National Security Council	32, XXI; 47, 2
Presidential Documents	3
Science and Technology Policy, Office of	32, XXIV; 47, II
Trade Representative, Office of the United States	15, XX
Export Administration, Bureau of	15, VII
Export-Import Bank of the United States	5, LII; 12, IV
Family Assistance, Office of	45, II
Farm Credit Administration	5, XXXI; 12, VI
Farm Credit System Insurance Corporation	5, XXX; 12, XIV

Agency	CFR Title, Subtitle or Chapter
Farm Service Agency	7, VII, XVIII
Federal Acquisition Regulation	48, 1
Federal Aviation Administration	14, I
Commercial Space Transportation	14, III
Federal Claims Collection Standards	4, II
Federal Communications Commission	5, XXIX; 47, I
Federal Contract Compliance Programs, Office of	41, 60
Federal Crop Insurance Corporation	7, IV
Federal Deposit Insurance Corporation	5, XXII; 12, III
Federal Election Commission	11, I
Federal Emergency Management Agency	44, I
Federal Acquisition Regulation	48, 44
Federal Employees Group Life Insurance Federal Acquisition Regulation	48, 21
Federal Employees Health Benefits Acquisition Regulation	48, 16
Federal Energy Regulatory Commission	5, XXIV; 18, I
Federal Financial Institutions Examination Council	12, XI
Federal Financing Bank	12, VIII
Federal Highway Administration	23, I, II; 49, III
Federal Home Loan Mortgage Corporation	1, IV
Federal Housing Enterprise Oversight Office	12, XVII
Federal Housing Finance Board	12, IX
Federal Inspector for the Alaska Natural Gas Transportation System, Office of	10, XV
Federal Labor Relations Authority, and General Counsel of the Federal Labor Relations Authority	5, XIV; 22, XIV
Federal Law Enforcement Training Center	31, VII
Federal Maritime Commission	46, IV
Federal Mediation and Conciliation Service	29, XII
Federal Mine Safety and Health Review Commission	5, LXXIV; 29, XXVII
Federal Pay, Advisory Committee on	5, IV
Federal Prison Industries, Inc.	28, III
Federal Procurement Policy Office	48, 99
Federal Property Management Regulations	41, 101
Federal Property Management Regulations System	41, Subtitle C
Federal Railroad Administration	49, II
Federal Register, Administrative Committee of	1, I
Federal Register, Office of	1, II
Federal Reserve System	12, II
Board of Governors	5, LVIII
Federal Retirement Thrift Investment Board	5, VI, LXXVI
Federal Service Impasses Panel	5, XIV
Federal Trade Commission	5, XLVII; 16, I
Federal Transit Administration	49, VI
Federal Travel Regulation System	41, Subtitle F
Fine Arts, Commission on	45, XXI
Fiscal Service	31, II
Fish and Wildlife Service, United States	50, I, IV
Fishery Conservation and Management	50, VI
Food and Drug Administration	21, I
Food and Consumer Service	7, II
Food Safety and Inspection Service	9, III
Foreign Agricultural Service	7, XV
Foreign Assets Control, Office of	31, V
Foreign Claims Settlement Commission of the United States	45, V
Foreign Service Grievance Board	22, IX
Foreign Service Impasse Disputes Panel	22, XIV
Foreign Service Labor Relations Board	22, XIV
Foreign-Trade Zones Board	15, IV
Forest Service	36, II
General Accounting Office	4, I, II
General Services Administration	5, LVII
Contract Appeals, Board of	48, 61
Federal Acquisition Regulation	48, 5
Federal Property Management Regulations System	41, 101, 105
Federal Travel Regulation System	41, Subtitle F
Payment From a Non-Federal Source for Travel Expenses	41, 304

Agency	CFR Title, Subtitle or Chapter
Payment of Expenses Connected With the Death of Certain Employees	41, 303
Relocation Allowances	41, 302
Travel Allowances	41, 301
Geological Survey	30, IV
Government Ethics, Office of	5, XVI
Government National Mortgage Association	24, III
Grain Inspection, Packers and Stockyards Administration	7, VIII; 9, II
Great Lakes Pilotage	46, III
Harry S. Truman Scholarship Foundation	45, XVIII
Health and Human Services, Department of	5, XLV; 45, Subtitle A
Child Support Enforcement, Office of	45, III
Children and Families, Administration for	45, II, III, IV, X
Community Services, Office of	45, X
Family Assistance, Office of	45, II
Federal Acquisition Regulation	48, 3
Food and Drug Administration	21, I
Health Care Financing Administration	42, IV
Human Development Services, Office of	45, XIII
Indian Health Service	25, V
Inspector General (Health Care), Office of	42, V
Public Health Service	42, I
Refugee Resettlement, Office of	45, IV
Health Care Financing Administration	42, IV
Housing and Urban Development, Department of	5, LXV; 24, Subtitle B
Community Planning and Development, Office of Assistant Secretary for	24, V, VI
Equal Opportunity, Office of Assistant Secretary for	24, I
Federal Acquisition Regulation	48, 24
Federal Housing Enterprise Oversight, Office of	12, XVII
Government National Mortgage Association	24, III
Housing—Federal Housing Commissioner, Office of Assistant Secretary for	24, II, VIII, X, XX
Inspector General, Office of	24, XII
Public and Indian Housing, Office of Assistant Secretary for	24, IX
Secretary, Office of	24, Subtitle A, VII
Housing—Federal Housing Commissioner, Office of Assistant Secretary for	24, II, VIII, X, XX
Human Development Services, Office of	45, XIII
Immigration and Naturalization Service	8, I
Independent Counsel, Office of	28, VII
Indian Affairs, Bureau of	25, I, V
Indian Affairs, Office of the Assistant Secretary	25, VI
Indian Arts and Crafts Board	25, II
Indian Health Service	25, V
Information Agency, United States	22, V
Federal Acquisition Regulation	48, 19
Information Resources Management, Office of	7, XXVII
Information Security Oversight Office, National Archives and Records Administration	32, XX
Inspector General	
Agriculture Department	7, XXVI
Health and Human Services Department	42, V
Housing and Urban Development Department	24, XII
Institute of Peace, United States	22, XVII
Inter-American Foundation	5, LXIII; 22, X
Intergovernmental Relations, Advisory Commission on	5, VII
Interior Department	
American Indians, Office of the Special Trustee	25, VII
Endangered Species Committee	50, IV
Federal Acquisition Regulation	48, 14
Federal Property Management Regulations System	41, 114
Fish and Wildlife Service, United States	50, I, IV
Geological Survey	30, IV
Indian Affairs, Bureau of	25, I, V
Indian Affairs, Office of the Assistant Secretary	25, VI
Indian Arts and Crafts Board	25, II

Agency	CFR Title, Subtitle or Chapter
Land Management, Bureau of	43, II
Minerals Management Service	30, II
Mines, Bureau of	30, VI
National Indian Gaming Commission	25, III
National Park Service	36, I
Reclamation, Bureau of	43, I
Secretary of the Interior, Office of	43, Subtitle A
Surface Mining and Reclamation Appeals, Board of	30, III
Surface Mining Reclamation and Enforcement, Office of	30, VII
Internal Revenue Service	26, I
International Boundary and Water Commission, United States and Mexico, United States Section	22, XI
International Development, United States Agency for	22, II
Federal Acquisition Regulation	48, 7
International Development Cooperation Agency, United States	22, XII
International Development, United States Agency for	22, II; 48, 7
Overseas Private Investment Corporation	5, XXXIII; 22, VII
International Fishing and Related Activities	50, III
International Investment, Office of	31, VIII
International Joint Commission, United States and Canada	22, IV
International Organizations Employees Loyalty Board	5, V
International Trade Administration	15, III; 19, III
International Trade Commission, United States	19, II
Interstate Commerce Commission	5, XL
James Madison Memorial Fellowship Foundation	45, XXIV
Japan–United States Friendship Commission	22, XVI
Joint Board for the Enrollment of Actuaries	20, VIII
Justice Department	5, XXVIII; 28, I
Drug Enforcement Administration	21, II
Federal Acquisition Regulation	48, 28
Federal Claims Collection Standards	4, II
Federal Prison Industries, Inc.	28, III
Foreign Claims Settlement Commission of the United States	45, V
Immigration and Naturalization Service	8, I
Offices of Independent Counsel	28, VI
Prisons, Bureau of	28, V
Property Management Regulations	41, 128
Labor Department	5, XLII
Benefits Review Board	20, VII
Employees' Compensation Appeals Board	20, IV
Employment and Training Administration	20, V
Employment Standards Administration	20, VI
Federal Acquisition Regulation	48, 29
Federal Contract Compliance Programs, Office of	41, 60
Federal Procurement Regulations System	41, 50
Labor-Management Standards, Office of	29, II, IV
Mine Safety and Health Administration	30, I
Occupational Safety and Health Administration	29, XVII
Pension and Welfare Benefits Administration	29, XXV
Public Contracts	41, 50
Secretary of Labor, Office of	29, Subtitle A
Veterans' Employment and Training, Office of the Assistant Secretary for	41, 61; 20, IX
Wage and Hour Division	29, V
Workers' Compensation Programs, Office of	20, I
Labor-Management Standards, Office of	29, II, IV
Land Management, Bureau of	43, II
Legal Services Corporation	45, XVI
Library of Congress	36, VII
Copyright Office	37, II
Management and Budget, Office of	5, III, LXXVII; 48, 99
Marine Mammal Commission	50, V
Maritime Administration	46, II
Merit Systems Protection Board	5, II
Micronesian Status Negotiations, Office for	32, XXVII

Agency	CFR Title, Subtitle or Chapter
Mine Safety and Health Administration	30, I
Minerals Management Service	30, II
Mines, Bureau of	30, VI
Minority Business Development Agency	15, XIV
Miscellaneous Agencies	1, IV
Monetary Offices	31, I
National Aeronautics and Space Administration	5, LIX; 14, V
Federal Acquisition Regulation	48, 18
National Agricultural Library	7, XLI
National Agricultural Statistics Service	7, XXXVI
National Archives and Records Administration	5, LXVI; 36, XII
Information Security Oversight Office	32, XX
National Bureau of Standards	15, II
National Capital Planning Commission	1, IV
National Commission for Employment Policy	1, IV
National Commission on Libraries and Information Science	45, XVII
National and Community Service, Corporation for	45, XXV
National Council on Disability	34, XII
National Credit Union Administration	12, VII
National Drug Control Policy, Office of	21, III
National Foundation on the Arts and the Humanities	45, XI
National Highway Traffic Safety Administration	23, II, III; 49, V
National Indian Gaming Commission	25, III
National Institute for Literacy	34, XI
National Institute of Standards and Technology	15, II
National Labor Relations Board	5, LXI; 29, I
National Marine Fisheries Service	50, II, IV
National Mediation Board	29, X
National Oceanic and Atmospheric Administration	15, IX; 50, II, III, IV, VI
National Park Service	36, I
National Railroad Adjustment Board	29, III
National Railroad Passenger Corporation (AMTRAK)	49, VII
National Science Foundation	5, XLIII; 45, VI
Federal Acquisition Regulation	48, 25
National Security Council	32, XXI
National Security Council and Office of Science and Technology Policy	47, II
National Telecommunications and Information Administration	15, XXIII; 47, III
National Transportation Safety Board	49, VIII
National Weather Service	15, IX
Natural Resources Conservation Service	7, VI
Navajo and Hopi Indian Relocation, Office of	25, IV
Navy Department	32, VI
Federal Acquisition Regulation	48, 52
Neighborhood Reinvestment Corporation	24, XXV
Northeast Dairy Compact Commission	7, XIII
Nuclear Regulatory Commission	5, XLVIII; 10, I
Federal Acquisition Regulation	48, 20
Occupational Safety and Health Administration	29, XVII
Occupational Safety and Health Review Commission	29, XX
Offices of Independent Counsel	28, VI
Operations Office	7, XXVIII
Overseas Private Investment Corporation	5, XXXIII; 22, VII
Panama Canal Commission	48, 35
Panama Canal Regulations	35, I
Patent and Trademark Office	37, I
Payment From a Non-Federal Source for Travel Expenses	41, 304
Payment of Expenses Connected With the Death of Certain Employees	41, 303
Peace Corps	22, III
Pennsylvania Avenue Development Corporation	36, IX
Pension and Welfare Benefits Administration	29, XXV
Pension Benefit Guaranty Corporation	29, XL
Personnel Management, Office of	5, I, XXXV; 45, VIII
Federal Acquisition Regulation	48, 17
Federal Employees Group Life Insurance Federal Acquisition Regulation	48, 21

Agency	CFR Title, Subtitle or Chapter
Federal Employees Health Benefits Acquisition Regulation	48, 16
Postal Rate Commission	5, XLVI; 39, III
Postal Service, United States	5, LX; 39, I
Postsecondary Education, Office of	34, VI
President's Commission on White House Fellowships	1, IV
Presidential Commission on the Assignment of Women in the Armed Forces	32, XXIX
Presidential Documents	3
Prisons, Bureau of	28, V
Productivity, Technology and Innovation, Assistant Secretary	37, IV
Public Contracts, Department of Labor	41, 50
Public and Indian Housing, Office of Assistant Secretary for	24, IX
Public Health Service	42, I
Railroad Retirement Board	20, II
Reclamation, Bureau of	43, I
Refugee Resettlement, Office of	45, IV
Regional Action Planning Commissions	13, V
Relocation Allowances	41, 302
Research and Special Programs Administration	49, I
Rural Business-Cooperative Service	7, XVIII, XLII
Rural Development Administration	7, XLII
Rural Housing Service	7, XVIII, XXXV
Rural Telephone Bank	7, XVI
Rural Utilities Service	7, XVII, XVIII, XLII
Saint Lawrence Seaway Development Corporation	33, IV
Science and Technology Policy, Office of	32, XXIV
Science and Technology Policy, Office of, and National Security Council	47, II
Secret Service	31, IV
Securities and Exchange Commission	17, II
Selective Service System	32, XVI
Small Business Administration	13, I
Smithsonian Institution	36, V
Social Security Administration	20, III; 48, 23
Soldiers' and Airmen's Home, United States	5, XI
Special Counsel, Office of	5, VIII
Special Education and Rehabilitative Services, Office of	34, III
State Department	22, I
Federal Acquisition Regulation	48, 6
Surface Mining and Reclamation Appeals, Board of	30, III
Surface Mining Reclamation and Enforcement, Office of	30, VII
Surface Transportation Board	49, X
Susquehanna River Basin Commission	18, VIII
Technology Administration	15, XI
Technology Policy, Assistant Secretary for	37, IV
Technology, Under Secretary for	37, V
Tennessee Valley Authority	5, LXIX; 18, XIII
Thrift Depositor Protection Oversight Board	12, XV
Thrift Supervision Office, Department of the Treasury	12, V
Trade Representative, United States, Office of	15, XX
Transportation, Department of	5, L
Coast Guard	33, I; 46, I; 49, IV
Commercial Space Transportation	14, III
Contract Appeals, Board of	48, 63
Emergency Management and Assistance	44, IV
Federal Acquisition Regulation	48, 12
Federal Aviation Administration	14, I
Federal Highway Administration	23, I, II; 49, III
Federal Railroad Administration	49, II
Federal Transit Administration	49, VI
Maritime Administration	46, II
National Highway Traffic Safety Administration	23, II, III; 49, V
Research and Special Programs Administration	49, I
Saint Lawrence Seaway Development Corporation	33, IV
Secretary of Transportation, Office of	14, II; 49, Subtitle A
Surface Transportation Board	49, X

Agency	CFR Title, Subtitle or Chapter
Transportation, Office of	7, XXXIII
Travel Allowances	41, 301
Treasury Department	5, XXI; 17, IV
Alcohol, Tobacco and Firearms, Bureau of	27, I
Community Development Financial Institutions Fund	12, XVIII
Comptroller of the Currency	12, I
Customs Service, United States	19, I
Engraving and Printing, Bureau of	31, VI
Federal Acquisition Regulation	48, 10
Federal Law Enforcement Training Center	31, VII
Fiscal Service	31, II
Foreign Assets Control, Office of	31, V
Internal Revenue Service	26, I
International Investment, Office of	31, VIII
Monetary Offices	31, I
Secret Service	31, IV
Secretary of the Treasury, Office of	31, Subtitle A
Thrift Supervision, Office of	12, V
Truman, Harry S. Scholarship Foundation	45, XVIII
United States and Canada, International Joint Commission	22, IV
United States and Mexico, International Boundary and Water Commission, United States Section	22, XI
United States Enrichment Corporation	10, XI
Utah Reclamation Mitigation and Conservation Commission	43, III
Veterans Affairs Department	38, I
Federal Acquisition Regulation	48, 8
Veterans' Employment and Training, Office of the Assistant Secretary for	41, 61; 20, IX
Vice President of the United States, Office of	32, XXVIII
Vocational and Adult Education, Office of	34, IV
Wage and Hour Division	29, V
Water Resources Council	18, VI
Workers' Compensation Programs, Office of	20, I
World Agricultural Outlook Board	7, XXXVIII

List of CFR Sections Affected

All changes in this volume of the Code of Federal Regulations which were made by documents published in the FEDERAL REGISTER since January 1, 1986, are enumerated in the following list. Entries indicate the nature of the changes effected. Page numbers refer to FEDERAL REGISTER pages. The user should consult the entries for chapters and parts as well as sections for revisions.

For the period before January 1, 1986, see the ''List of Sections Affected, 1949–1963 and 1964–1972, 1973–1985,'' published in seven separate volumes.

1986

49 CFR

51 FR Page

Chapter I

106 Authority citation revised 5969, 34986
106 Appendix A amended 5969, 34986
107 Authority citation revised 5969, 34986
107.1—107.123 (Subpart B) Appendix A amended 34986
107.105 (d) removed 34986
107.303 Amended 34986
107.309 (a) and (b)(1) amended 34986
107.339 Amended 34987
171 Authority citation revised 23078, 42176, 44791
171.7 (d)(4)(iii) and (23) revised 5970
(d)(21) revised 34987
(d)(27) revised 44791
171.8 Amended 5970, 23078, 42176
Effective date deferred to 3–3–87 33900
Effective date deferred 46672
171.11 (d)(1)(i) revised 42177
(d)(9) added 44791
Effective date deferred 46672
171.12a (c) revised 23075
(a)(3)(i) revised 42177
Effective date deferred 46672
171.15 (b) amended 34987
171.17 (a) amended 34987
172 Authority citation revised 23078, 25639, 42177

49 CFR—Continued

51 FR Page

Chapter I—Continued

172.101 Table amended 5970, 34987, 41633
(b) and (c)(9) revised 42177
Table amended; Appendix added 42177
Effective date deferred 46672
172.102 (a)(1) added 25639
(e) revised 42195
Effective date deferred 46672
172.202 (e) revised 5970
172.203 (h) revised 5970
(c) revised 42195
Effective date deferred 46672
172.324 Revised 42195
Effective date deferred 46672
172.328 (c) introductory text revised 5970
172.334 (c) revised 23078
Effective date deferred to 3–3–87 33900
172.502 (a) introductory text, (b) and (c) introductory text revised 5970
172.504 (a), (b), and (c) revised; Tables 1 and 2 amended 5971
Table 2 amended 23078
Effective date deferred to 3–3–87 33900
172.507 Revised 5971
172.510 (d) revised 5971
(c)(1) removed; (c) (2) and (3) redesignated as (c) (1) and (2) and revised 23078
Effective date deferred to 3–3–87 33900

49 CFR—Continued

51 FR Page

Chapter I—Continued

172.512 (a)(2) revised 5971
172.525 (a) revised 23079
Effective date deferred to 3–3–87 33900
(b) amended 34987
172 Appendix B amended 23079
Appendix B effective date deferred to 3–3–87 33900
173.3a (b)(1) corrected 3788
173.5a Added 5971
173.6 (b)(7) amended 5974
173.12 (b) revised 5971
173.25 (c) added 5971
173.31 (b)(4) removed 5972
173.32 (b)(3) removed; (b)(4) redesignated as (b)(3) 5972
173.33 (f)(5) amended 5974
173.34 (c)(3) amended; (g)(4)(ii) revised 5972
173.112 (a)(2) revised 5972
173.114a (h)(3) removed; (i) redesignated as (j); new (i) added 5972
173.115 (d)(2) revised 5972
173.118a (b) (5) and (6) amended; (b)(7) added 5972
173.119 (m) (10), (11), and (12) amended 5974
173.120 (c) revised 5972
173.123 (a)(6) amended 5974
173.131 (a) introductory text revised 5972
173.134 (a)(6) amended 5974
173.135 (a)(9) amended 5974
173.136 (a)(8) amended 5974
173.141 (a)(8) amended 5974
173.145 (a)(7) amended 5974
173.148 (a)(5) amended 5974
173.154 (a) (4) and (18) amended 5974
173.190 (b)(4) amended 5974
173.206 (c)(3) amended 5974
173.224 (a)(4) amended 5974
173.245 (a)(38) revised 5972
(a) (29), (30), and (31) amended 5974
173.247 (a)(12) amended 5974
173.247a (a)(3) amended 5974
173.248 (a)(6) amended 5974
173.249 (a)(6) amended 5974
173.252 (a)(4) amended 5974
173.253 (a)(6) amended 5974
173.254 (a)(5) amended 5974
173.255 (a)(5) amended 5974
173.260 (a)(3) amended; (f) removed 5972

49 CFR—Continued

51 FR Page

Chapter I—Continued

173.262 (b)(3) amended 34987
173.263 (a)(10) amended 5974
173.264 (a)(14) and (b)(3) amended 5974
173.266 (e) amended 5974
(f)(1) amended 34987
173.267 (a)(7) amended 5974
173.268 (b)(3) amended 5974
173.271 (a)(8) introductory text and (iv) amended 5974
173.272 (i)(18) revised 5972
(i)(21) amended 5974
173.273 (a)(5) amended 5974
173.274 (a)(4) amended 5974
173.276 (a)(6) amended 5974
173.277 (a)(9) amended 5974
173.280 (a)(8) amended 5974
173.287 (b)(8) amended 5974
173.289 (a)(4) amended 5974
173.292 (a)(2) amended 5974
173.294 (a)(3) amended 5974
173.295 (a)(9) amended 5974
173.296 (a)(2) amended 5974
173.297 (a)(1) amended 5974
173.304 (a)(2) table amended; (a)(3) revised 5973
173.306 (d)(1) revised 5973
173.315 (a)(1) table Note 2 amended; (m)(7) revised 5973
(i)(13) amended 5974
173.346 (a)(10) revised 5973
(a)(12) amended 5974
173.347 (a)(3) amended 5974
173.348 (a)(1) amended 5974
173.352 (a)(5) amended 5974
173.353 (e) amended 5974
173.354 Note 1 amended 5974
173.358 (a)(14) amended 5974
173.359 (a)(16) amended 5974
173.366 (a)(3) removed 5973
173.369 (a)(14) amended 5974
173.373 (a)(6) amended 5974
173.415 (c) revised 34987
173.417 (b)(2)(ii) Table 5 footnote 8 revised; (b)(5) amended 5973
173.420 Added 41633
(a)(2) revised 46675
173.421–1 Heading, (a), and (b) introductory text revised 5973
173.427 Introductory text, (c), and (d) revised; (e) added 5973
173.465 (d)(2) amended 5973
174 Authority citation revised 23079
174.25 (a)(2) table amended; (c) revised 23079

49 CFR—Continued

51 FR Page

Chapter I—Continued
Effective date deferred to 3–3–87 33900
174.61 (b) revised 5974
174.81 (f) table amended 5974
174.93 Revised 23079
Effective date deferred to 3–3–87 33900
174.101 (n) introductory text and (o) introductory text revised 5974
174.750 (b) amended 34987
175 Authority citation revised 44791
175.10 (a)(2)(ii) revised 4369
(a)(4) introductory text and (15) revised 44791
175.20 Amended 34987
175.30 (e)(1) revised 5974
(e)(1)(ii) amended; (e)(1)(iii) added 44791
176.5 (c) removed 5974
176.15 (b) removed 5974
176.18 (a)(4) and (b) amended 5974
176.48 (c) amended 5974
176.96 Revised 5974
176.135 (c) amended 5974
176.163 (c) removed 5974
176.410 (e)(2) revised 5974
177.825 (b)(1)(ii) revised 5975
177.835 (c)(3) amended 5975
177.837 (e) amended 5975
177.839 (d) amended 5975
177.840 (d) and (f) amended 5975
177.841 (d) and (e) amended 5975
177.848 (f) table amended 5975
177.854 (f) (1) and (2) amended 5975
177.859 (b) amended 5975
178.16–19 (c)(2) amended 34987
178.45–17 (e) amended 34987
178.50–19 Revised 5975
178.51–19 (c)(5) revised; (c)(6) added 5975
178.61–20 (a)(2), (b), and (c) revised 5975
178.65–14 (d) amended 34987
178.92–12 (a) introductory text revised 5976
178.98–9 (a)(1) revised 5976
178.99–9 (a)(1) revised 5976
178.100–9 (a)(1) revised 5976
178.102–4 (a) introductory text revised 5976
178.131–9 (a)(1) revised 5976
178.132–9 (a)(1) revised 5976

49 CFR—Continued

51 FR Page

Chapter I—Continued
178.150–3 (a)(2) revised 5976
178.205–16 (a) revised 5976
178.209–8 (a)(2) and Note 1 revised 5976
178.337–1 (d) amended 5977
178.337–10 (d) amended 5977
178.337–13 (b) amended 5977
178.337–17 (a) amended 5976
(b) amended 5977
178.338–3 (b) amended 34987
178.338–18 (a) and (b) amended 5976
178.340–10 (b) amended 5977

1987

49 CFR

52 FR Page

Chapter I
107.101—107.123 (Subpart B) Appendix A amended 13037, 36671
172.101 Table amended; appendix effective date suspended in part 41303
107.315 (c) revised 36671
171 Authority citation revised 29527, 36671
171.7 (d) (1), (2), (3) (ii), (iii), (iv), and (ix) revised; (d)(3) (x), (xi), (xii), and (5)(xxxiv) added 13037
(c) (21) and (31) amended 36671
171.8 Amended 13037, 24474, 36671
Amended; eff. 2–1–88 29527
171.11 (d)(1)(i) correctly revised 4825
171.12 (a) amended 13037
171.12a (a)(3) correctly revised 4825
171.15 (c) Note added 8592
171.17 Removed 8592
172 Authority citation revised 36671
172.101 (c) corrected; Appendix correctly revised 4825
Table amended 13038, 36671
172.102 (e) correctly revised 4842
Table amended 36671
172.101—172.102 (Subpart B) Appendix A amended 36671
172.202 (a)(4) and (c)(1) revised 13038
172.203 (c) correctly revised 4842
172.324 Correctly revised 4843
172.326 (d)(1) added; eff. 2–1–88 29527
172.328 (e) revised; eff. 2–1–88 29527

49 CFR—Continued

52 FR Page

Chapter I—Continued

172.331 Added; eff. 2–1–88 29527
172.332 (a) and (c)(1) revised; eff. 2–1–88 29527
172.334 (a) and (b) revised; (g) added; eff. 2–1–88 29528
172.336 (c) (4) and (5) revised 13038
(b) introductory text revised; eff. 2–1–88 29528
172.338 Revised; eff. 2–1–88 29528
172.400 (c) amended 36671
172.504 Table 2 footnote 8 revised 13038
172.510 (e) added; eff. 2–1–88 29528
(b) removed 36671
172.512 (a)(1) amended 36671
172.519 (b) (2) and (4) revised; eff. 5–18–88 13038
173 Authority citation revised 8592, 25341, 36672
173.4 (b) amended 15949
173.11 (b)(4) revised 13038
173.12 (b)(2) revised 13038
173.25 (c) introductory text revised 13039
173.29 Heading revised; (e) added; eff. 2–1–88 29528
173.31 (d)(6) Table 2 amended 13039
173.33 (d)(13) amended 13039
173.34 (e)(8) amended 13039
(e)(9) note 1 corrected 36672
173.51 (g) revised 13039
173.57 (b) removed 13039
173.58 (b) removed 13039
173.81 Heading and (b) revised 13039
173.86 (a)(2) revised; (h) and (i) added 13039
173.87 Amended 13039
173.93 (a)(2) added 13039
173.104 Heading and (c) revised 13039
173.115 (b)(2)(ii) corrected 36672
173.118a (b)(6) revised 8592
173.122 (a)(4) removed 13039
173.164 (a)(2) revised 13040
173.197a Revised 13040
173.220 (a) introductory text revised; (a)(3) added 13040
173.245a (a) table footnote 2 revised 13040
173.253 (a) (7) and (8) revised 13040
(a)(2) corrected 36672
173.262 (b)(4) amended 13040
173.266 (f)(2) amended 13040
173.271 (a)(7), (8)(iv) and (9) revised 13040

49 CFR—Continued

52 FR Page

Chapter I—Continued

(a) (7) and (9) corrected 36672
173.272 (i)(2) corrected 36672
173.277 (d)(1) removed 13040
173.294 Heading, (a) (2) and (3) and (b) revised 13041
(a) introductory text and (3) corrected 36672
173.301 (k)(1) revised 13041
173.302 (a)(5)(iv) revised 13041
173.304 (a)(2) table amended 13041
(a)(4) introductory text corrected 36672
173.314 (c) table Note 6 amended 13041
173.315 (c) introductory text revised 13041
173.316 (c)(2) table revised 13041
173.318 (b) and (f) (2) and (3) revised 13041
173.320 Revised 13043
173.386 (d) corrected 36672
173.420 (a)(1) revised 7582
(a)(2) revised 25341
173.421–1 (b)(2) amended 15949
(a) corrected 36672
173.421–2 (d) amended 15949
173.427 (a) corrected 36672
173.965 Added 13043
174 Authority citation revised 8592
174.45 Revised 8592
175 Authority citation revised 8592, 36672
175.31 (a) amended 36672
175.45 (d) removed 8592
176 Authority citation revised 8592
176.48 (b) revised 8592
176.76 (g)(2) added 13043
177 Authority citation revised 8592, 36672
177.807 Revised 8592
177.814 (b) revised 13043
177.824 (f) introductory text revised; (f)(2) amended 13044
(f) introductory text revised 36672
177.825 (b)(1) introductory text revised; (c) corrected 36672
177.834 (k) removed 13044
177.835 Parenthetical phrase following heading revised 13044
177.837 Parenthetical phrase following heading revised 13044
177.838 Parenthetical phrase following heading and (g) revised 13044

49 CFR—Continued

52 FR Page

Chapter I—Continued

177.839 Parenthetical phrase following heading revised 13044
177.840 Parenthetical phrase following heading revised 13044
177.841 Parenthetical phrase following heading revised; (e) amended 13044
177.848 (b) revised 13044
177.861 (a) corrected 36672
178 Authority citation revised 36672
178.38–10 (b) amended 13044
178.42–14 (a) introductory text revised 13044
178.46–4 (a) revised 13044
178.46–5 (d) (1) and (2) footnote 1 revised 13045
178.46–6 (c) revised 13045
178.46–8 (e) revised 13045
178.51–10 (d) revised 13045
178.53–9 (a) amended 13045
178.54 Removed 13045
178.54—178.54–23 Removed 36672
178.61–10 (b) revised 13045
178.135–8 (a)(1) revised 36672
178.245–1 (a) introductory text revised 13045
178.337–1 (d) amended 13046
178.337–13 (b) amended 13046
179 Authority citation revised 36672
179.3 (c) amended 36672
179.4 (a) amended 36672
179.100–13 (a) revised 13046
179.100–14 (a) (1) and (3) revised 13046
179.102–2 (a)(3) revised 13046
179.103–5 (b) (1) and (4) revised 13046
(b)(1) corrected 36672
179.200–7 (b), (c), (d), (e) and (f) table column headings revised 13046
179.200–13 Revised 13047
179.200–17 (a) (1), (6), and (7) and (b) (1) and (3) revised 13047
179.202–8 Revised 13047
179.202–11 Revised 13047
179.202–16 Revised 13048
179.220–1 Revised 13048
179.220–7 (b), (c), (d) and (e) table column headings revised 13048
179.220–18 (a) (1) and (6) and (b) (1) and (3) revised 13048
179.220–19 (c) amended 13048

49 CFR—Continued

52 FR Page

Chapter I—Continued

179.221–1 Table amended 13049
179.222 Added 13049
179.222–1 Added 13049
Correctly designated 36672
179.301 (a) table revised 13049

1988

49 CFR

53 FR Page

Chapter I

107.101—107.123 (Subpart B) Appendix A amended 38273
171 Authority citation revised 16991
171.7 (c)(16) and (d)(4)(iii) and (16) revised; eff. 4–1–89 36550
(c) (7), (9), and (14) amended 38273
171.8 Amended 16991
172.101 Table corrected; CFR correction 8846
Table amended; eff. 1–2–89 17160
Table amended 38273
172.101—172.102 (Subpart B) Appendix A removed 37577
172.200 (b) revised; eff. 1–2–89 17160
172.331 (d) amended 38274
172.402 (g) removed 38274
172.403 (d) added 38274
173.3a (d) removed 38274
173.10 (e) amended 38274
173.22 (d) removed 16992
173.247 (a)(2) amended 38274
173.315 (a)(1) table amended 38274
173.325—173.388 (Subpart H) Heading amended 38274
173.403 (s) amended 38274
173.417 (a)(8) and (b)(5) text revised; (b)(5) Table 6 amended; eff. 4–1–89 36551
173.420 (a)(1) and (2)(i), (b) and (c) amended; eff. 4–1–89 36551
173.435 Table amended 38274
173.1080 Revised; eff. 1–2–89 17160
174.24 (b) revised; eff. 1–2–89 17160
174.715 (b) amended 38274
174.750 (a) amended 38274
177.817 (d) revised; eff. 1–2–89 17160
177.825 (b)(1) revised 16991
(f) added 16992
178.44–12 Footnote 1 amended 38274
178.83–3 (b) amended 38274
178.118–6 (a) table amended 38275
178.121–1 (a) and (d) revised; eff. 4–1–89 36551

49 CFR—Continued

53 FR Page

Chapter I—Continued

178.121–2 (b) and (g) revised; eff. 4–1–89 36551
178.121–3 Revised; eff. 4–1–89 36551
178.121–4 Revised; eff. 4–1–89 36551
178.121–5 Added; eff. 4–1–89 36552
178.121–6 Added; eff. 4–1–89 36552

1989

49 CFR

54 FR Page

Chapter I

107 Authority citation revised 22899
Meeting, effective date extended to 2–12–90 38233
107.319 (c) amended; (d) added 22899
107.501—107.504 (Subpart F) Added; eff. 12–12–89 25003
Regulation at 54 FR 25003 and 38233 effective date delayed to 6–12–90 50382
107 Appendix A to Subpart B amended 40067
171 Technical correction 28750
Meeting; effective date extended to 2–12–90 38233
171.2 (e) added; eff. 12–12–89 25004
(e) regulation at 54 FR 25004 and 38233 effective date delayed to 6–12–90 50382
171.3 (b)(1) amended 40068
171.7 (d)(27) revised 954
(c) (33) and (34), (d) (29), and (30) added; eff. 12–12–89 25004
(d)(4)(iv) added 35652
(d)(31) added; (c) (4), (5), (19), (d)(2), (7)(iv), (17) revised; eff. 11–15–89 38793
(c)(35) and (d)(32) added; eff. 11–24–89 39326
(c)(35) and (d)(32) correctly designated 41447
(d)(31) correctly designated 47987
(e) regulation at 54 FR 25004 and 38233 effective date delayed to 6–12–90 50382
171.8 Amended; eff. 12–12–89 25004
Amended; eff. 4–2–90 27144
Amended; eff. 11–15–89 38793
Amended 40068
Amended; eff. 11–24–89 39326
Amended; eff. 10–31–89 39501

49 CFR—Continued

54 FR Page

Chapter I—Continued

(e) regulation at 54 FR 25004 and 38233 effective date delayed to 6–12–90 50382
171.11 (d)(10) added; eff. 4–2–90 27144
171.12 (b) amended; (b) (1) and (2) added; (d) revised; eff. 11–15–89 38793
(b) correctly revised 47987
171.12a (a)(7) added; eff. 4–2–90 27144
171.15 (a) revised; eff. 1–1–90 25812
171.16 (a) and (b) revised; Note added; eff. date 1–1–90 25813
171.21 Added; eff. date 1–1–90 25813
172 Heading and authority citation revised 27144
Meeting; effective date extended to 2–12–90 38233
172.101 Amended; eff. 11–15–89 38793
Table amended 40068
Table corrected 41448, 47987, 51031
172.101 Appendix revised 34668
Appendix amended; eff. 10–31–89 39501
Appendix amended 49998
172.201 (d) added; eff. 4–2–90 27144
172.203 (h)(1)(i) and (2)(i) amended; eff. 12–12–89 25004
(i)(2) removed; (i)(3) redesignated as (i)(2); (k) revised; (m) added; eff. 4–2–90 27144
(k) corrected 28750
(c)(1) introductory text revised; eff. 10–31–89 39505
(e) regulation at 54 FR 25004 and 38233 effective date delayed to 6–12–90 50382
172.301 (c) redesignated as (d); new (c) added; eff. 4–2–90 27145
172.302 Removed; eff. 4–2–90 27145
172.324 (a) introductory text revised; eff. 10–31–89 39505
172.504 (c) revised; eff. 11–15–89 38794
172.600—172.604 (Subpart G) Added; eff. 4–2–90 27145
172.600 (c)(1) corrected 28750
172.602 (c)(2) corrected 28750
173 Heading corrected 40068
173 Meeting, effective date extended to 2–12–90 38233
173.4 (b) amended 14814
173.5 (a)(2) amended; eff. 11–15–89 38794

49 CFR—Continued

54 FR Page

Chapter I—Continued

173.6 (c) amended 40068
173.12 (f) added; eff. 4–2–90 27146
173.22 (a)(2) introductory text revised; (b) removed; eff. 12–12–89 25005
Regulation at 54 FR 25005 and 38233 effective date delayed to 6–12–90 50382
173.25 (c) introductory text revised; eff. 11–15–89 38794
173.31 (a)(1) introductory text amended; (a)(11) added; (f)(1) revised 8338
Effective date extended 20856, 35878
(a)(7) removed; (a) (5) and (6) revised; (c)(14) and (d)(10) added; eff. 11–15–89 38794
(a)(5) correctly revised 47987
173.33 (a)(2) added 18822
Revised; eff. 12–12–89 25005
Regulation at 54 FR 25005 and 38233 effective date delayed to 6–12–90 50382
173.34 (e) table amended; eff. 11–15–89 38794
173.86 (b) revised; (j) added; eff. 11–24–89 39326
173.88 (d) revised; eff. 11–24–89 39327
173.100 (t) and (x) removed; (r) and (u) revised; eff. 11–24–89 39327
173.104 (c) amended 40068
173.115 (b)(1), (2) (i) and (ii) revised; eff. 11–15–89 38794
173.118 (c) corrected 10010
(a) amended; 11–15–89 38795
173.118a (b)(7) amended; 11;15;89 38795
173.119 (m) (11) and (12) removed; (a) introductory text and (17), (b) introductory text and (1), (e)(3), and (m)(10) revised; eff. 12–12–89 25006
Regulation at 54 FR 25006 and 38233 effective date delayed to 6–12–90 50382
173.123 (a)(6) revised; eff. 12–12–89 25007
Regulation at 54 FR 25007 and 38233 effective date delayed to 6–12–90 50382
173.131 (a) introductory text and (2) revised; eff. 12–12–89 25007

49 CFR—Continued

54 FR Page

Chapter I—Continued

Regulation at 54 FR 25007 and 38233 effective date delayed to 6–12–90 50382
173.134 (a)(6) revised; eff. 12–12–89 25007
Regulation at 54 FR 25007 and 38233 effective date delayed to 6–12–90 50382
173.135 (a)(9) revised; eff. 12–12–89 25007
Regulation at 54 FR 25007 and 38233 effective date delayed to 6–12–90 50382
173.136 (a)(8) revised; eff. 12–12–89 25007
Regulation at 54 FR 25007 and 38233 effective date delayed to 6–12–90 50382
173.141 (a)(8) revised; eff. 12–12–89 25007
Regulation at 54 FR 25007 and 38233 effective date delayed to 6–12–90 50382
173.145 (a)(7) revised; eff. 12–12–89 25007
Regulation at 54 FR 25007 and 38233 effective date delayed to 6–12–90 50382
173.148 (a)(5) revised; eff. 12–12–89 25007
Regulation at 54 FR 25007 and 38233 effective date delayed to 6–12–90 50382
173.154 (a)(4) revised; (a)(18) removed; eff. 12–12–89 25007
Regulation at 54 FR 25007 and 38233 effective date delayed to 6–12–90 50382
173.182 Footnote 1 amended; 11–15–89 38795
173.190 (b)(4) revised; eff. 12–12–89 25008
Regulation at 54 FR 25008 and 38233 effective date delayed to 6–12–90 50382
173.206 (c)(3) revised; eff. 12–12–89 25008
Regulation at 54 FR 25008 and 38233 effective date delayed to 6–12–90 50382
173.224 (a)(4) revised; eff. 12–12–89 25008
Regulation at 54 FR 25008 and 38233 effective date delayed to 6–12–90 50382

49 CFR—Continued

54 FR Page

Chapter I—Continued

173.242 (b) amended 40068
173.245 (a)(29) revised; (a) (30) and (31) removed; eff. 12–12–89 25008
Regulation at 54 FR 25008 and 38233 effective date delayed to 6–12–90..... 50382
173.247 (a)(12) revised; eff. 12–12–89..... 25008
(a) amended 40069
Regulation at 54 FR 25008 and 38233 effective date delayed to 6–12–90..... 50382
173.247a (a)(3) revised; eff. 12–12–89..... 25008
Regulation at 54 FR 25008 and 38233 effective date delayed to 6–12–90..... 50382
173.248 (a)(6) revised; eff. 12–12–89..... 25009
Regulation at 54 FR 25009 and 38233 effective date delayed to 6–12–90..... 50382
173.249 (a) (1) and (6) revised; eff. 12–12–89..... 25009
Regulation at 54 FR 25009 and 38233 effective date delayed to 6–12–90..... 50382
(a) amended 40069
173.249a (d)(1) revised; (d)(6) added; eff. 12–12–89..... 25009
Regulation at 54 FR 25009 and 38233 effective date delayed to 6–12–90..... 50382
(d)(3) revised; eff. 11–15–89 38795
Amended 40069
173.250 (b) revised; eff. 11–15–89..... 38795
173.250a (a) (1) and (2) revised; eff. 12–12–89..... 25009
Regulation at 54 FR 25009 and 38233 effective date delayed to 6–12–90..... 50382
173.252 (a)(4) revised; eff. 12–12–89..... 25009
Regulation at 54 FR 25009 and 38233 effective date delayed to 6–12–90..... 50382
173.253 (a)(6) revised; eff. 12–12–89..... 25009
Regulation at 54 FR 25009 and 38233 effective date delayed to 6–12–90..... 50382
173.254 (a)(5) revised; eff. 12–12–89..... 25009

49 CFR—Continued

54 FR Page

Chapter I—Continued

Regulation at 54 FR 25009 and 38233 effective date delayed to 6–12–90..... 50382
173.255 (a)(5) revised; eff. 12–12–89..... 25009
Regulation at 54 FR 25009 and 38233 effective date delayed to 6–12–90..... 50382
173.257 (a)(4) revised; eff. 12–12–89..... 25010
Regulation at 54 FR 25010 and 38233 effective date delayed to 6–12–90..... 50382
173.262 (a)(11) and (b)(4) revised; eff. 12–12–89 25010
(b) (1), (2) and (3) amended; 11–15–89..... 38795
Regulation at 54 FR 25010 and 38233 effective date delayed to 6–12–90..... 50382
173.263 (a)(10) revised; eff. 12–12–89..... 25010
Regulation at 54 FR 25010 and 38233 effective date delayed to 6–12–90..... 50382
173.264 (a)(14) Note 1 removed; (a)(14) and (b)(3) revised; eff. 12–12–89..... 25010
(b)(1) introductory text amended; eff. 11–15–89..... 38795
(b)(1) introductory text correctly amended..... 47987
Regulation at 54 FR 25010 and 38233 effective date delayed to 6–12–90..... 50382
173.265 (b)(4) revised; eff. 12–12–89..... 25010
Regulation at 54 FR 25010 and 38233 effective date delayed to 6–12–90..... 50382
173.266 (f)(2) revised; eff. 12–12–89..... 25010
Regulation at 54 FR 25010 and 38233 effective date delayed to 6–12–90..... 50382
173.267 (a)(7) revised; eff. 12–12–89..... 25010
Regulation at 54 FR 25010 and 38233 effective date delayed to 6–12–90..... 50382
173.268 (b)(3) revised; eff. 12–12–89..... 25010
Regulation at 54 FR 25010 and 38233 effective date delayed to 6–12–90..... 50382

49 CFR—Continued

54 FR Page

Chapter I—Continued

173.271 (a)(8) revised; eff. 12–12–89 25010
Regulation at 54 FR 25010 and 38233 effective date delayed to 6–12–90 50382
173.272 (i) (25) and (28) removed; (c) through (f) and (i)(21) revised; eff. 12–12–89 25011
(b) designated as (a)(1); (b) reserved 40069
Regulation at 54 FR 25011 and 38233 effective date delayed to 6–12–90 50382
173.273 (a)(5) and (b)(2) revised; eff. 12–12–89 25011
Regulation at 54 FR 25011 and 38233 effective date delayed to 6–12–90 50382
173.274 (a)(4) revised; eff. 12–12–89 25011
Regulation at 54 FR 25011 and 38233 effective date delayed to 6–12–90 50382
173.276 (a)(6) revised; eff. 12–12–89 25011
Regulation at 54 FR 25011 and 38233 effective date delayed to 6–12–90 50382
173.277 (a)(9) revised; eff. 12–12–89 25011
Regulation at 54 FR 25011 and 38233 effective date delayed to 6–12–90 50382
173.280 (a)(8) revised; eff. 12–12–89 25012
Regulation at 54 FR 25012 and 38233 effective date delayed to 6–12–90 50382
173.287 (b)(8) revised; eff. 12–12–89 25012
Regulation at 54 FR 25012 and 38233 effective date delayed to 6–12–90 50382
173.289 (a) (1) and (4) revised; eff. 12–12–89 25012
Regulation at 54 FR 25012 and 38233 effective date delayed to 6–12–90 50382
173.292 (a) (1) and (2) revised; eff. 12–12–89 25012
Regulation at 54 FR 25012 and 38233 effective date delayed to 6–12–90 50382
173.294 (a)(3) revised; eff. 12–12–89 25012

49 CFR—Continued

54 FR Page

Chapter I—Continued

Regulation at 54 FR 25012 and 38233 effective date delayed to 6–12–90 50382
173.295 (a)(9) revised; (a)(10) removed; eff. 12–12–89 25012
Regulation at 54 FR 25012 and 38233 effective date delayed to 6–12–90 50382
173.296 (a)(2) revised; eff. 12–12–89 25012
Regulation at 54 FR 25012 and 38233 effective date delayed to 6–12–90 50382
173.297 (a)(1) revised; eff. 12–12–89 25012
Regulation at 54 FR 25012 and 38233 effective date delayed to 6–12–90 50382
173.301 (d)(3), (l)(1) amended; (l) introductory text revised; 11–15–89 38795
173.304 (b) and (a)(2) table amended; 11–15–89 38795
(b) corrected 47987
173.306 (d)(2) amended 40069
173.314 (c) table amended; eff. 11–15–89 38796
173.315 (a) introductory text, table Note 4, (h)(4), (i)(1), and (k)(5) revised; (a) table Note 17 amended; (n) and (o) added; eff. 12–12–89 25012
(a)(1) table amended; eff. 11–15–89 38796
Regulation at 54 FR 25012 and 38233 effective date delayed to 6–12–90 50382
173.318 (b)(2)(i)(C) and (g)(3) added; (b)(2)(ii) amended; eff. 12–12–89 25013
Regulation at 54 FR 25013 and 38233 effective date delayed to 6–12–90 50382
173.346 (a)(12) revised; eff. 12–12–89 25013
Regulation at 54 FR 25013 and 38233 effective date delayed to 6–12–90 50382
173.347 (a)(3) revised; eff. 12–12–89 25013
Regulation at 54 FR 25013 and 38233 effective date delayed to 6–12–90 50382
173.352 (a)(5) revised; eff. 12–12–89 25013

49 CFR—Continued

54 FR Page

Chapter I—Continued

Regulation at 54 FR 25013 and 38233 effective date delayed to 6–12–90 50382

173.353 (e) revised; eff. 12–12–89 25013

Regulation at 54 FR 25013 and 38233 effective date delayed to 6–12–90 50382

173.353a (a) amended 40069

173.354 (a)(5) revised; Note 1 and footnote 1 removed; eff. 12–12–89 25014

Regulation at 54 FR 25014 and 38233 effective date delayed to 6–12–90 50382

173.358 (a)(14) revised; eff. 12–12–89 25014

Regulation at 54 FR 25014 and 38233 effective date delayed to 6–12–90 50382

173.359 (a)(16) revised; eff. 12–12–89 25014

Regulation at 54 FR 25014 and 38233 effective date delayed to 6–12–90 50382

173.369 (a)(14) revised; eff. 12–12–89 25014

Regulation at 54 FR 25014 and 38233 effective date delayed to 6–12–90 50382

173.373 (a)(6) revised; eff. 12–12–89 25014

Heading and introductory text amended 40069

Regulation at 54 FR 25014 and 38233 effective date delayed to 6–12–90 50382

173.374 (a)(4) revised; eff. 12–12–89 25014

Regulation at 54 FR 25014 and 38233 effective date delayed to 6–12–90 50382

173.386 Heading amended 40068

173.403 (i) amended 40069

173.417 (b)(1) Table 4 amended; eff. 11–15–89 38796

173.420 Revised 35652

173.421–1 (b)(2) amended 14814

173.421–2 (d) amended 14814

173.425 (b)(8) revised; eff. 10–31–89 39506

174.104 (c), (d), and (f) amended 40069

174.510 Amended; eff. 11–15–89 38796

Corrected 47987

49 CFR—Continued

54 FR Page

Chapter I—Continued

175.10 (a)(21) revised 955

(a) (5) and (7) revised; eff. 11–15–89 38796

175.45 (a) and (b) introductory text revised; (c) amended; eff. date 1–1–90 25813

176 Technical correction 28750

Meeting; effective date extended to 2–12–90 38233

Authority citation revised; eff. 11–15–89 38796

176.11 (a) introductory text revised; eff. 11–15–89 38796

176.30 (a)(3)(i) added; eff. 4–2–90 27146

176.76 (b) amended; eff. 12–12–89 25014

Regulation at 54 FR 25014 and 38233 effective date delayed to 6–12–90 50382

176.340 (a)(2) revised; eff. 11–15–89 38796

176.905 (k) introductory text revised; eff. 11–15–89 38796

177 Meeting; effective date extended to 2–12–90 38233

177.800 Revised; eff. 12–12–89 25015

Regulation at 54 FR 25015 and 38233 effective date delayed to 6–12–90 50382

177.801 Revised; eff. 12–12–89 25015

Regulation at 54 FR 25015 and 38233 effective date delayed to 6–12–90 50382

177.802 Revised; eff. 12–12–89 25015

Regulation at 54 FR 25015 and 38233 effective date delayed to 6–12–90 50382

177.814 Revised; eff. 12–12–89 25015

Regulation at 54 FR 25015 and 38233 effective date delayed to 6–12–90 50382

177.822 (b) amended; eff. 12–12–89 25015

Regulation at 54 FR 25015 and 38233 effective date delayed to 6–12–90 50382

177.824 Revised; eff. 12–12–89 25015

Regulation at 54 FR 25015 and 38233 effective date delayed to 6–12–90 50382

177.835 (k) amended; eff. 12–12–89 25015

49 CFR—Continued

54 FR Page

Chapter I—Continued

Regulation at 54 FR 25015 and 38233 effective date delayed to 6–12–90 50382

177.840 Heading and (f) revised; eff. 12–12–89 25015

Regulation at 54 FR 25015 and 38233 effective date delayed to 6–12–90 50382

178 Meeting; effective date extended to 2–12–90 38233

178.39–5 (a) revised; eff. 11–15–89 38797

178.51–15 (b) amended 40069

178.115–6 (b) table amended 40069

Correctly designated and amended 51031

178.210–12 (a) amended 40069

178.224–1 (a)(1) table revised; eff. 11–15–89 38797

(a)(1) correctly revised 47987

178.224–2 (c) table revised; eff. 11–15–89 38797

(d) amended 40069

178.251–7 (a) amended; eff. 11–15–89 38797

178.320 Added; eff. 12–12–89 25015

Effective date extended to 2–12–90 38233

Regulation at 54 FR 25015 and 38233 effective date delayed to 6–12–90 50382

178.337 Heading revised; eff. 12–12–89 25015

Effective date extended to 2–12–90 38233

Regulation at 54 FR 25015 and 38233 effective date delayed to 6–12–90 50382

178.337–1 (e) revised; eff. 12–12–89 25015

Effective date extended to 2–12–90 38233

Regulation at 54 FR 25015 and 38233 effective date delayed to 6–12–90 50382

178.337–2 (c) revised; eff. 12–12–89 25015

Effective date extended to 2–12–90 38233

Regulation at 54 FR 25015 and 38233 effective date delayed to 6–12–90 50382

178.337–3 Revised; eff. 12–12–89 25015

Effective date extended to 2–12–90 38233

49 CFR—Continued

54 FR Page

Chapter I—Continued

Regulation at 54 FR 25015 and 38233 effective date delayed to 6–12–90 50382

178.337–4 (b) amended; eff. 12–12–89 25017

Effective date extended to 2–12–90 38233

Regulation at 54 FR 25017 and 38233 effective date delayed to 6–12–90 50382

178.337–6 (a) revised; eff. 12–12–89 25017

Effective date extended to 2–12–90 38233

Regulation at 54 FR 25017 and 38233 effective date delayed to 6–12–90 50382

178.337–8 (a)(2) and (b) revised; eff. 12–12–89 25017

Effective date extended to 2–12–90 38233

Regulation at 54 FR 25017 and 38233 effective date delayed to 6–12–90 50382

178.337–9 Section and (a) headings, (b), and (d)(1) revised; eff. 12–12–89 25017

Effective date extended to 2–12–90 38233

Regulation at 54 FR 25017 and 38233 effective date delayed to 6–12–90 50382

178.337–11 Revised; eff. 12–12–89 25017

Effective date extended to 2–12–90 38233

Regulation at 54 FR 25017 and 38233 effective date delayed to 6–12–90 50382

178.337–14 (b) revised; eff. 12–12–89 25018

Effective date extended to 2–12–90 38233

Regulation at 54 FR 25016 and 38233 effective date delayed to 6–12–90 50382

178.337–15 Revised; eff. 12–12–89 25018

Regulation at 54 FR 25016 and 38233 effective date delayed to 6–12–90 50382

178.337–18 (a) amended; eff. 12–12–89 25018

Effective date extended to 2–12–90 38233

49 CFR—Continued

54 FR Page

Chapter I—Continued
Regulation at 54 FR 25016 and 38233 effective date delayed to 6–12–90 50382
178.338–3 Revised; eff. 12–12–89 25018
Effective date extended to 2–12–90 38233
Regulation at 54 FR 25016 and 38233 effective date delayed to 6–12–90 50382
178.338–8 (b) revised; eff. 12–12–89 25019
Effective date extended to 2–12–90 38233
Regulation at 54 FR 25019 and 38233 effective date delayed to 6–12–90 50382
178.338–17 Revised; eff. 12–12–89 25020
Effective date extended to 2–12–90 38233
Regulation at 54 FR 25020 and 38233 effective date delayed to 6–12–90 50382
178.340—178.343 Removed; eff. 12–12–89 25020
Effective date extended to 2–12–90 38233
Regulation at 54 FR 25020 and 38233 effective date delayed to 6–12–90 50382
178.340–8 (b) revised 18822
178.341 Regulation at 54 FR 25020 and 38233 effective date delayed to 6–12–90 50382
178.342 Regulation at 54 FR 25020 and 38233 effective date delayed to 6–12–90 50382
178.343 Regulation at 54 FR 25020 and 38233 effective date delayed to 6–12–90 50382
178.345 Added; eff. 12–12–89 25020
Effective date extended to 2–12–90 38233
Regulation at 54 FR 25020 and 38233 effective date delayed to 6–12–90 50382
178.345–1 Added; eff. 12–12–89 25021
Effective date extended to 2–12–90 38233
Regulation at 54 FR 25020 and 38233 effective date delayed to 6–12–90 50382
178.345–2 Added; eff. 12–12–89 25021
Effective date extended to 2–12–90 38233

49 CFR—Continued

54 FR Page

Chapter I—Continued
Regulation at 54 FR 25021 and 38233 effective date delayed to 6–12–90 50382
178.345–3 Added; eff. 12–12–89 25021
Effective date extended to 2–12–90 38233
Regulation at 54 FR 25021 and 38233 effective date delayed to 6–12–90 50382
178.345–4 Added; eff. 12–12–89 25022
Effective date extended to 2–12–90 38233
Regulation at 54 FR 25022 and 38233 effective date delayed to 6–12–90 50382
178.345–5 Added; eff. 12–12–89 25022
Effective date extended to 2–12–90 38233
Regulation at 54 FR 25022 and 38233 effective date delayed to 6–12–90 50382
178.345–6—178.345–8 Added; eff. 12–12–89 25023
Effective date extended to 2–12–90 38233
178.345–6 Regulation at 54 FR 25023 and 38233 effective date delayed to 6–12–90 50382
178.345–7 Regulation at 54 FR 25023 and 38233 effective date delayed to 6–12–90 50382
178.345–8 Regulation at 54 FR 25023 and 38233 effective date delayed to 6–12–90 50382
178.345–9—178.345–10 Added; eff. 12–12–89 25025
Effective date extended to 2–12–90 38233
178.345–9 Regulation at 54 FR 25025 and 38233 effective date delayed to 6–12–90 50382
178.345–10 Regulation at 54 FR 25025 and 38233 effective date delayed to 6–12–90 50382
178.345–11—178.345–13 Added; eff. 12–12–89 25026
Effective date extended to 2–12–90 38233
Regulation at 54 FR 25026 and 38233 effective date delayed to 6–12–90 50382
178.345–12 Regulation at 54 FR 25026 and 38233 effective date delayed to 6–12–90 50382

49 CFR—Continued

54 FR Page

Chapter I—Continued

178.345–13 Regulation at 54 FR 25026 and 38233 effective date delayed to 6–12–90 50382
178.345–14 Added; eff. 12–12–89 25027
Effective date extended to 2–12–90 38233
Regulation at 54 FR 25027 and 38233 effective date delayed to 6–12–90 50382
178.345–15 Added; eff. 12–12–89 25028
Effective date extended to 2–12–90 38233
Regulation at 54 FR 25028 and 38233 effective date delayed to 6–12–90 50382
178.346 Added; eff. 12–12–89 25028
Effective date extended to 2–12–90 38233
Regulation at 54 FR 25028 and 38233 effective date delayed to 6–12–90 50382
178.346–1 Added; eff. 12–12–89 25028
Effective date extended to 2–12–90 38233
Regulation at 54 FR 25028 and 38233 effective date delayed to 6–12–90 50382
178.346–2 Added; eff. 12–12–89 25028
Effective date extended to 2–12–90 38233
Regulation at 54 FR 25028 and 38233 effective date delayed to 6–12–90 50382
178.346–3—178.346–15 Added; eff. 12–12–89 25029
Effective date extended to 2–12–90 38233
178.346–3 Regulation at 54 FR 25029 and 38233 effective date delayed to 6–12–90 50382
178.346–4 Regulation at 54 FR 25029 and 38233 effective date delayed to 6–12–90 50382
178.346–5 Regulation at 54 FR 25029 and 38233 effective date delayed to 6–12–90 50382
178.346–6 Regulation at 54 FR 25029 and 38233 effective date delayed to 6–12–90 50382
178.346–7 Regulation at 54 FR 25029 and 38233 effective date delayed to 6–12–90 50382
178.346–8 Regulation at 54 FR 25029 and 38233 effective date delayed to 6–12–90 50382

49 CFR—Continued

54 FR Page

Chapter I—Continued

178.346–9 Regulation at 54 FR 25029 and 38233 effective date delayed to 6–12–90 50382
178.346–10 Regulation at 54 FR 25029 and 38233 effective date delayed to 6–12–90 50382
178.346–11 Regulation at 54 FR 25029 and 38233 effective date delayed to 6–12–90 50382
178.346–12 Regulation at 54 FR 25029 and 38233 effective date delayed to 6–12–90 50382
178.346–13 Regulation at 54 FR 25029 and 38233 effective date delayed to 6–12–90 50382
178.346–14 Regulation at 54 FR 25029 and 38233 effective date delayed to 6–12–90 50382
178.346–15 Regulation at 54 FR 25029 and 38233 effective date delayed to 6–12–90 50382
178–347 Added; eff. 12–12–89 25029
Effective date extended to 2–12–90 38233
Regulation at 54 FR 25029 and 38233 effective date delayed to 6–12–90 50382
178.347–1 Added; eff. 12–12–89 25029
Effective date extended to 2–12–90 38233
Regulation at 54 FR 25029 and 38233 effective date delayed to 6–12–90 50382
178.347–2—178.347–14 Added; eff. 12–12–89 25030
Effective date extended to 2–12–90 38233
178.347–2 Regulation at 54 FR 25030 and 38233 effective date delayed to 6–12–90 50382
178.347–3 Regulation at 54 FR 25030 and 38233 effective date delayed to 6–12–90 50382
178.347–5 Regulation at 54 FR 25030 and 38233 effective date delayed to 6–12–90 50382
178.347–6 Regulation at 54 FR 25030 and 38233 effective date delayed to 6–12–90 50382
178.347–7 Regulation at 54 FR 25030 and 38233 effective date delayed to 6–12–90 50382
178.347–8 Regulation at 54 FR 25030 and 38233 effective date delayed to 6–12–90 50382

49 CFR—Continued

54 FR Page

Chapter I—Continued

178.347–9 Regulation at 54 FR 25030 and 38233 effective date delayed to 6–12–90 50382
178.347–10 Regulation at 54 FR 25030 and 38233 effective date delayed to 6–12–90 50382
178.347–11 Regulation at 54 FR 25030 and 38233 effective date delayed to 6–12–90 50382
178.347–12 Regulation at 54 FR 25030 and 38233 effective date delayed to 6–12–90 50382
178.347–13 Regulation at 54 FR 25030 and 38233 effective date delayed to 6–12–90 50382
178.347–14 Regulation at 54 FR 25030 and 38233 effective date delayed to 6–12–90 50382
178.347–15 Added; eff. 12–12–89 25031
Regulation at 54 FR 25031 and 38233 effective date delayed to 6–12–90 50382
Effective date extended to 2–12–90 38233
178.348 Added; eff. 12–12–89 25031
Effective date extended to 2–12–90 38233
Regulation at 54 FR 25031 and 38233 effective date delayed to 6–12–90 50382
178.348–1 Added; eff. 12–12–89 25031
Effective date extended to 2–12–90 38233
Regulation at 54 FR 25031 and 38233 effective date delayed to 6–12–90 50382
178.348–2 Added; eff. 12–12–89 25031
Table II corrected 28750
Effective date extended to 2–12–90 38233
Regulation at 54 FR 25031 and 38233 effective date delayed to 6–12–90 50382
178.348–3—178.348–15 Added; eff. 12–12–89 25032
Effective date extended to 2–12–90 38233
178.348–3 Regulation at 54 FR 25032 and 38233 effective date delayed to 6–12–90 50382
178.348–4 Regulation at 54 FR 25032 and 38233 effective date delayed to 6–12–90 50382

49 CFR—Continued

54 FR Page

Chapter I—Continued

178.348–5 Regulation at 54 FR 25032 and 38233 effective date delayed to 6–12–90 50382
178.348–6 Regulation at 54 FR 25032 and 38233 effective date delayed to 6–12–90 50382
178.348–7 Regulation at 54 FR 25032 and 38233 effective date delayed to 6–12–90 50382
178.348–8 Regulation at 54 FR 25032 and 38233 effective date delayed to 6–12–90 50382
178.348–9 Regulation at 54 FR 25032 and 38233 effective date delayed to 6–12–90 50382
178.348–10 Regulation at 54 FR 25032 and 38233 effective date delayed to 6–12–90 50382
178.348–11 Regulation at 54 FR 25032 and 38233 effective date delayed to 6–12–90 50382
178.348–12 Regulation at 54 FR 25032 and 38233 effective date delayed to 6–12–90 50382
178.348–13 Regulation at 54 FR 25032 and 38233 effective date delayed to 6–12–90 50382
178.348–14 Regulation at 54 FR 25032 and 38233 effective date delayed to 6–12–90 50382
178.348–15 Regulation at 54 FR 25032 and 38233 effective date delayed to 6–12–90 50382
179.14 Revised; eff. 11–15–89 38797
179.100–13 (d) revised; eff. 11–15–89 38798
179.100–15 (c) revised; eff. 11–15–89 38798
179.100–23 (c) added; eff. 11–15–89 38798
179.105–1 (c)(1) amended; eff. 11–15–89 38799
179.105–2 (a), (b)(1) and (c)(1) amended; eff. 11–15–89 38799
179.105–3 (a) amended; eff. 11–15–89 38799
179.105–6 Removed; eff. 11–15–89 38798
179.105–9 Removed; eff. 11–15–89 38798
179.106–1 (c) amended; eff. 11–15–89 38799
179.106–2 (a), (b)(1) and (c)(1) amended; eff. 11–15–89 38799

49 CFR—Continued

54 FR Page

Chapter I—Continued

179.106–3 (a), (b)(1) and (c)(1) amended; eff. 11–15–89 38799
179.106–4 (a) and (b) amended; eff. 11–15–89 38799
179.200–18 (b) revised; (c) added; eff. 11–15–89 38798
179.201–1 (a) Table amended; eff. 11–15–89 38798
179.203–1 (c) and (d) amended; eff. 11–15–89 38798
(c) amended 47988
179.203–2 (a)(1) amended; eff. 11–15–89 38799
179.300–7 (a) revised; eff. 11–15–89 38798
180 Added; eff. 12–12–89 25032
Meeting; effective date extended to 2–12–90 38233
Regulation at 54 FR 25015 and 38233 effective date delayed to 6–12–90 50382

1990

49 CFR

55 FR Page

Chapter I

106 Authority citation revised 39978
106.5 (a) amended 39978
106.9 Amended 39978
107.101 Introductory text amended 52465
107.101—107.123 (Subpart B) Appendix A amended 39978
107.103 (b)(1) amended 39978
(a) amended 52465
107.105 (a)(1) amended 39978
107.111 (b)(1) amended 39978
107.113 (a) amended 52465
107.123 (a) amended 39978
107.201 (c) amended 52465
107.203 (b)(1) amended 39978
107.215 (b)(1) amended 39978
107.315 (c) amended 39978
107.325 (a) and (b) amended 39979
107.335 Amended 39978
107.402 (a) amended 39978
107.501—107.504 (Subpart F) Regulation at 54 FR 25003 effective date delayed to 9–1–90 21035
Regulation at 54 FR 25003 effective date delayed to 12–31–90 37028
107.501 Revised; eff. 12–31–90 37047

49 CFR—Continued

55 FR Page

Chapter I—Continued

107.502 (e) removed; (a) through (d) redesignated as (b) through (e); new (a) and (f) added; eff. 12–31–90 37047
(c) redesignated as (d) and amended; eff. 12–31–90 39978
107.503 (a) introductory text, (a)(3), (4), (6), (b) and (c) revised; eff. 12–31–90 37047
107.504 Regulation at 54 FR 25003 effective date delayed to 12–31–90; (a) revised; (c) amended; (f) added; eff. 12–31–90 37048
107.601—107.603 (Subpart G) Added (OMB numbers) 52465
171—180 (Subchapter C) Interpretative rule 6758
171 Authority citation revised 874, 39978
171.2 Regulation at 54 FR 25004 effective date delayed to 9–1–90 21035
Regulation at 54 FR 25004 effective date delayed to 12–31–90 37028
171.3 (e) removed; Notes 1 and 2 revised 52466
171.6 Added 52466
171.7 Regulation at 54 FR 25004 effective date delayed to 9–1–90 21035
Regulation at 54 FR 25004 effective date delayed to 12–31–90 37028
(b) amended 39978
Revised 52466
171.8 Amended 424
Regulation at 54 FR 27144 effective date delayed to 6–4–90; amended 874
Regulation at 54 FR 27144 effective date delayed to 9–17–90 20796
Regulation at 54 FR 25004 effective date delayed to 9–1–90 21035
Regulation at 54 FR 27144 and 55 FR 874 effective date delayed to 12–31–90; amended; eff. 12–31–90 33711
Regulation at 54 FR 25004 effective date delayed to 12–31–90; amended; eff. 12–31–90 37048
Amended 52470
171.10 Revised 52472

49 CFR—Continued

55 FR Page

Chapter I—Continued
171.11 Regulation at 54 FR 27144 effective date delayed to 6–4–90 874
Regulation at 54 FR 27144 effective date delayed to 9–17–90 20796
Regulation at 54 FR 27144 effective date delayed to 12–31–90; (d)(10) republished 33711
(d)(1)(i)(C) amended 46798
(c) revised; (d)(4)(i) and (ii) removed; (d)(4)(iii) and (iv) redesignated as (d)(4)(i) and (ii); (d)(11) added 52472
171.12 Revised 52472
171.12a Regulation at 54 FR 27144 effective date delayed to 6–4–90 874
Regulation at 54 FR 27144 effective date delayed to 9–17–90 20796
Regulation at 54 FR 27144 effective date delayed to 12–31–90; (a)(7) republished 33711
Revised 52473
171.14 Revised 52473
171.16 (b) and Note amended 39978
171.20 (b) amended 39978
172 Regulation at 54 FR 27144 effective date delayed to 12–31–90 33711
Authority citation revised 39979, 52474
Heading revised 52474
172.1—172.3 (Subpart B) Heading revised 52474
172.101 Table amended; eff. 12–31–90 37048
Table amended 39979
Appendix revised 46798
(a) through (j) revised; (k) and (l) added; Table revised 52474
172.102 Revised 52582
172.201 Regulation at 54 FR 27144 effective date delayed to 6–4–90 874
Regulation at 54 FR 27144 effective date delayed to 9–17–90 20796
Regulation at 54 FR 27144 effective date delayed to 12–31–90; (d) republished 33711
(a)(3) amended; (a)(4)(i) and (ii) removed 52589

49 CFR—Continued

55 FR Page

Chapter I—Continued
172.202 (a) through (d) revised 52589
172.203 Regulation at 54 FR 27144 effective date delayed to 6–4–90; (k)(2), (4)(i), (ii), and (l) revised 874, 875
Regulation at 54 FR 27144 and 55 FR 875 effective date delayed to 9–17–90 20796
Regulation at 54 FR 25004 effective date delayed to 9–1–90 21035
Regulation at 54 FR 27144 and 55 FR 875 effective date delayed to 12–31–90; (i)(2) and (l) removed; (i)(3) redesignated as (i)(2); (k)(1) introductory text, (2) introductory text, (3) introductory text, and (m) republished; (k)(4) revised; eff. 12–31–90 33711
Regulation at 54 FR 25004 effective date delayed to 12–31–90; (h)(1)(i) amended; eff.12–31–90 37048
(c)(1)(iii) amended 46825
(l) removed; (c)(2), (i)(2), (j), (k) and (m)(3) revised 52589
172.301 Regulation at 54 FR 27145 effective date delayed to 6–4–90; (c) revised; (d)(3) added 874, 875
Regulation at 54 FR 27145 and 55 FR 875 effective date delayed to 9–17–90 20796
Regulation at 54 FR 27145 and 55 FR 875 effective date delayed to 12–31–90; (c) republished; (d)(3) revised; eff. 12–31–90 ..... 33711, 33712
Revised 52590
172.302 Regulation at 54 FR 27145 effective date delayed to 6–4–90 874
Regulation at 54 FR 27145 effective date delayed to 9–17–90 20796
Regulation at 54 FR 27145 effective date delayed to 12–31–90; removal republished 33711, 33712
Added 52591
172.303 Added 52591
172.306 Removed 52591
172.308 Revised 52591
172.312 Revised 52591

49 CFR—Continued

55 FR Page

Chapter I—Continued

172.313 Added 52592
172.316 (a) and (c) revised 52592
172.320 Added 52592
172.324 (a)(3) amended 46825
Heading and introductory text revised 52592
172.326 Revised 52592
172.328 Revised 52592
172.330 Revised 52593
172.331 (d) amended 39981
Revised 52593
172.332 (b)(1), (3), (c)(1), (2), (3) and (5) revised 52593
172.334 (a) revised; (b)(1) and (3) amended 52593
172.336 (b) introductory text amended; (b)(1), (c)(2) and (3) revised 52593
172.400 Revised 52593
172.400a Added 52594
172.401 (a) introductory text amended; (d) removed 52594
172.402 Revised 52594
172.403 (e) removed 52594
172.405 Revised 52594
172.406 Revised 52594
172.407 (d)(1) and (3) amended 39981
Revised 52595
172.411 Revised 52595
172.415 Revised 52596
172.416 Revised 52596
172.417 Revised 52596
172.419 Revised 52597
172.420 Revised 52597
172.422 Revised 52597
172.423 Revised 52597
172.426 Revised 52597
172.427 Revised 52598
172.430 Revised 52598
172.431 Added 52598
172.432 Revised 52598
172.436 Revised 52598
172.438 Revised 52598
172.440 Revised 52598
172.442 Revised 52599
172.444 Removed 52599
172.446 Added 52599
172.448 Revised 52599
172.500 Revised 52599
172.502 Revised 52599
172.504 Revised 52600
172.505 Revised 875, 52601
Regulation at 55 FR 875 effective date delayed to 9–17–90 20796

49 CFR—Continued

55 FR Page

Chapter I—Continued

Regulation at 55 FR 875 effective date delayed to 12–31–90; revised; eff. 12–31–90 ..... 33711, 33712
172.508 (a) revised 52601
172.510 (a) amended 39981
(a) revised 52601
172.512 (b) introductory text, (1) and (2) amended 52601
172.514 Revised 52601
172.516 (c) introductory text revised; (c)(7) added 52601
172.519 Revised 52601
172.522 Revised 52602
172.523 Revised 52602
172.524 Revised 52602
172.525 Redesignated as 172.526; new 172.525 added 52603
172.526 Redesignated from 172.525 52603
172.528 Revised 52603
172.530 Revised 52603
172.532 Revised 52603
172.536 Removed 52603
172.540 Revised 52603
172.542 Revised 52603
172.544 Revised 52604
172.546 Revised 52604
172.547 Added 52604
172.548 Revised 52604
172.550 Revised 52604
172.552 Revised 52605
172.553 Added 52605
172.554 Revised 52605
172.556 Revised 52605
172.558 Revised 52605
172.560 Added 52605
172.600—172.604 (Subpart G) Regulation at 54 FR 27145 effective date delayed to 6–4–90 874
Regulation at 54 FR 27145 effective date delayed to 9–17–90 20796
Regulation at 54 FR 27145 effective date delayed to 12–31–90 33711
172.600 (a), (b), (c) introductory text, (1), and (d) republished; (c)(2) revised; eff. 12–31–90 33712
172.602 Regulation at 54 FR 27145 effective date delayed to 6–4–90; (a)(1), (5), (b)(3)(ii) and (iii), and (c)(1) revised 874, 875
Regulation at 55 FR 875 effective date delayed to 9–17–90 20796

49 CFR—Continued

55 FR Page

Chapter I—Continued
Regulation at 55 FR 875 effective date delayed to 12–31–90; republished; eff. 12–31–90 .....33711, 33712
172.604 Regulation at 55 FR 875 effective date delayed to 6–4–90; (a)(2) revised 874, 875
Regulation at 54 FR 27146 effective date delayed to 9–17–90 20796
Regulation at 55 FR 875 effective date delayed to 12–31–90; (a) introductory text, (3), and (b) republished; (a)(1) and (2) revised; eff. 12–31–90.....33711, 33713
172 Appendix B removed.....52606
173 Authority citation revised.....875, 27642
173.1 (d) added.....52606
173.2 Revised 52606
173.2a Added 52606
173.3 Revised 52607
173.4 (a)(1)(iii) revised.....875
Regulation at 55 FR 875 effective date delayed to 9–17–90 20796
Regulation at 55 FR 875 effective date delayed to 12–31–90; (a)(1)(iii) republished.....33711, 33713
Revised.....52608
173.5 (a)(2), (3) and (b) amended 52608
173.6 Removed 52608
173.7 (b) and (d) amended 52608
173.9 Revised 52608
173.10 (a), (b) and (e) amended 52608
173.12 Regulation at 54 FR 27146 effective date delayed to 6–4–90.....874
Regulation at 54 FR 27146 effective date delayed to 9–17–90 20796
Regulation at 54 FR 27146 effective date delayed to 12–31–90; (f) republished 33711, 33713
(e) amended 39981
Revised.....52609
173.21 Revised.....52609
173.22 Regulation at 54 FR 25005 effective date delayed to 9–1–90.....21035

49 CFR—Continued

55 FR Page

Chapter I—Continued
Regulation at 54 FR 25004 effective date delayed to 12–31–90; (a)(2) introductory text; eff. 12–31–90 37048
(a)(4) added 52610
173.22a (b) amended.....39981
173.23 (a) revised 52610
173.24 Revised.....52610
173.24a Added.....52611
173.24b Added.....52612
173.25 (a)(3) revised; (a)(5) added; (b) removed.....52612
173.26 Revised 52612
173.27 Revised 52612
173.28 (m)(3)(ii) amended.....39981
Revised.....52614
173.29 Revised.....52614
173.31 (a)(1) amended; (a)(11) revised.....424
(a)(5) amended 27642
(a)(11)(vi) and (ix) revised 39001
(a)(1) revised; (a)(12) through (17) added; (c) Table 1 footnote v removed.....52615
173.32 (a)(6) and (q) through (s) added.....52615
173.32c (a), (b), (g)(2) and (o) revised; (p) added 52616
173.32d Removed.....52616
173.33 Regulation at 54 FR 25005 effective date delayed to 9–1–90; (c)(4) and (d)(1) amended 21035, 21038
Regulation at 54 FR 25005 and 55 FR 21037 effective date delayed to 12–31–90; (d)(3) amended; (a)(3), (b)(3), (4), (c)(1) introductory text, (vi), (2) through (5), (d)(1), (2) and (e) revised; eff. 12–31–90 37048
(b)(2)(ii) and (iii) removed; (f) and (g) added 52616
173.34 (e)(1)(iv) amended 39981
173.40 Added 52616
173.50—173.63 (Subpart C) Revised.....52617
173.115—173.156 (Subpart D) Revised.....52634
173.119 Regulation at 54 FR 25006 effective date delayed to 9–1–90.....21035

49 CFR—Continued

55 FR Page

Chapter I—Continued

Regulation at 54 FR 25006 effective date delayed to 12–31–90; (a)(17)(i), (ii), (e)(3)(ii), (iii), (m)(10)(iv) and (v) revised; eff. 12–31–90 37049

173.123 Regulation at 54 FR 25006 effective date delayed to 9–1–90 21035

Regulation at 54 FR 25006 effective date delayed to 12–31–90 37028

173.131 Regulation at 54 FR 25007 effective date delayed to 9–1–90 21035

Regulation at 54 FR 25007 effective date delayed to 12–31–90; (a)(2) revised; eff. 12–30–90 37049

173.134 Regulation at 54 FR 25007 effective date delayed to 9–1–90 21035

Regulation at 54 FR 25007 effective date delayed to 12–31–90 37028

173.135 Regulation at 54 FR 25007 effective date delayed to 9–1–90 21035

Regulation at 54 FR 25007 effective date delayed to 12–31–90; (a)(9)(iii), (iv) and (v) revised; eff. 12–30–90 37050

173.136 Regulation at 54 FR 25007 effective date delayed to 9–1–90 21035

Regulation at 54 FR 25007 effective date delayed to 12–31–90; (a)(8) revised; eff. 12–31–90 37050

173.141 Regulation at 54 FR 25007 effective date delayed to 9–1–90 21035

Regulation at 54 FR 25007 effective date delayed to 12–31–90; (a)(8) revised; eff. 12–31–90 37050

173.145 Regulation at 54 FR 25007 effective date delayed to 9–1–90 21035

Regulation at 54 FR 25007 effective date delayed to 12–31–90; (a)(7)(ii) revised; eff. 12–31–90 37050

173.148 Regulation at 54 FR 25007 effective date delayed to 9–1–90 21035

Regulation at 54 FR 25005 effective date delayed to 12–31–90 37028

49 CFR—Continued

55 FR Page

Chapter I—Continued

173.154 Regulation at 54 FR 25007 effective date delayed to 9–1–90 21035

Regulation at 54 FR 25007 effective date delayed to 12–31–90; (a)(17) amended; (a)(4)(iii) through (vi) redesignated as (a)(4)(ii) through (v); (a)(4)(i)(B) and (C), new (a)(4)(ii) and (v) revised; eff. 12–31–90 37050

173.158—173.230 (Subpart E) Revised 52643

173.190 Regulation at 54 FR 25008 effective date delayed to 9–1–90 21035

Regulation at 54 FR 25008 effective date delayed to 12–31–90; (b)(4)(iv) revised; eff. 12–31–90 37050

173.206 Regulation at 54 FR 25008 effective date delayed to 9–1–90 21035

Regulation at 54 FR 25008 effective date delayed to 12–31–90; (c)(3)(v) revised; eff. 12–31–90 37050

173.217 Heading and (a) introductory text amended 39981

173.224 Regulation at 54 FR 25008 effective date delayed to 9–1–90 21035

Regulation at 54 FR 25008 effective date delayed to 12–31–90; (a)(4)(iii) and (iv) redesignated as (a)(4)(ii) and (iii); new (a)(4)(iii) revised; eff. 12–31–90 37050

173.240—173.249 (Subpart F) Revised 52663

173.245 Regulation at 54 FR 25008 effective date delayed to 9–1–90 21035

Regulation at 54 FR 25008 effective date delayed to 12–31–90; (a)(29)(iii) and (iv) revised; eff. 12–31–90 37051

173.247 Regulation at 54 FR 25008 effective date delayed to 9–1–90 21035

Regulation at 54 FR 25008 effective date delayed to 12–31–90; (a)(12)(ii) revised; eff. 12–31–90 37051

49 CFR—Continued

55 FR Page

Chapter I—Continued
(a)(12)(iii) amended; eff. 12–31–90 39981
173.247a Regulation at 54 FR 25008 effective date delayed to 9–1–90 21035
Regulation at 54 FR 25008 effective date delayed to 12–31–90; (a)(3)(iii) revised; eff. 12–31–90 37051
173.248 Regulation at 54 FR 25009 effective date delayed to 9–1–90 21035
Regulation at 54 FR 25009 effective date delayed to 12–31–90; (a)(6)(ii) revised; eff. 12–31–90 37051
173.249 Regulation at 54 FR 25009 effective date delayed to 9–1–90 21035
Regulation at 54 FR 25009 effective date delayed to 12–31–90; (a)(6)(iv) revised; eff. 12–31–90 37051
173.249a Regulation at 54 FR 25009 effective date delayed to 9–1–90 21035
Regulation at 54 FR 25009 effective date delayed to 12–31–90; (d)(6)(iv) revised; eff. 12–31–90 37051
173.250a Regulation at 54 FR 25009 effective date delayed to 9–1–90 21035
Regulation at 54 FR 25009 effective date delayed to 12–31–90; (a)(2)(ii) revised; eff. 12–31–90 37051
173.252 Regulation at 54 FR 25009 effective date delayed to 9–1–90 21035
Regulation at 54 FR 25009 effective date delayed to 12–31–90; (a)(4)(ii) amended; (a)(4)(iv) and (v) revised; eff. 12–31–90 37051
(a)(5) amended 39981
173.253 Regulation at 54 FR 25009 effective date delayed to 9–1–90 21035
Regulation at 54 FR 25009 effective date delayed to 12–31–90; (a)(6)(iii) revised; eff. 12–31–90 37051

49 CFR—Continued

55 FR Page

Chapter I—Continued
173.254 Regulation at 54 FR 25009 effective date delayed to 9–1–90 21035
Regulation at 54 FR 25009 effective date delayed to 12–31–90; (a)(5)(ii) revised; eff. 12–31–90 37052
173.255 Regulation at 54 FR 25009 effective date delayed to 9–1–90 21035
Regulation at 54 FR 25009 effective date delayed to 12–31–90 37028
173.257 Regulation at 54 FR 25010 effective date delayed to 9–1–90 21035
Regulation at 54 FR 25009 effective date delayed to 12–31–90; (a)(4)(ii) revised; eff. 12–31–90 37052
173.262 Regulation at 54 FR 25010 effective date delayed to 9–1–90 21035
Regulation at 54 FR 25010 effective date delayed to 12–31–90; (a)(11)(ii) revised; eff. 12–31–90 37052
173.263 Regulation at 54 FR 25010 effective date delayed to 9–1–90 21035
Regulation at 54 FR 25010 effective date delayed to 12–31–90; (a)(10)(ii) revised; eff. 12–31–90 37052
173.264 Regulation at 54 FR 25010 effective date delayed to 9–1–90 21035
Regulation at 54 FR 25010 effective date delayed to 12–31–90; (a)(14)(ii) and (b)(3) revised; eff. 12–31–90 37052
173.265 Regulation at 54 FR 25010 effective date delayed to 9–1–90 21035
Regulation at 54 FR 25010 effective date delayed to 12–31–90; (b)(4)(ii) revised; eff. 12–31–90 37052
173.266 Regulation at 54 FR 25010 effective date delayed to 9–1–90 21035

49 CFR—Continued

55 FR Page

Chapter I—Continued

Regulation at 54 FR 25010 effective date delayed to 12–31–90; (f)(2)(iv) redesignated as (f)(2)(vi); new (f)(2)(v) added; eff. 12–31–90 37052

173.267 Regulation at 54 FR 25010 effective date delayed to 9–1–90 21035

Regulation at 54 FR 25010 effective date delayed at 12–31–90 37028

173.268 Regulation at 54 FR 25010 effective date delayed to 9–1–90 21035

Regulation at 54 FR 25010 effective date delayed at 12–31–90 37028

173.271 Regulation at 54 FR 25010 effective date delayed to 9–1–90 21035

Regulation at 54 FR 25010 effective date delayed to 12–31–90; (a)(8)(iv) revised; eff. 12–31–90 37052

173.272 Regulation at 54 FR 25011 effective date delayed to 9–1–90 21035

Regulation at 54 FR 25011 effective date delayed to 12–31–90; (d), (e), (f), (g), (h) and (i)(21)(iv) revised; eff. 12–31–90 37052

173.273 Regulation at 54 FR 25011 effective date delayed to 9–1–90 21035

Regulation at 54 FR 25011 effective date delayed to 12–31–90; (a)(5) and (b)(2) revised; eff. 12–31–90 37053

173.274 Regulation at 54 FR 25011 effective date delayed to 9–1–90 21035

Regulation at 54 FR 25011 effective date delayed to 12–31–90; (a)(4) revised; eff. 12–31–90 37053

173.276 Regulation at 54 FR 25011 effective date delayed to 9–1–90 21035

Regulation at 54 FR 25011 effective date delayed to 12–31–90; (a)(6) introductory text and (iii) revised; eff. 12–31–90 37053

173.277 Regulation at 54 FR 25011 effective date delayed to 9–1–90 21035

49 CFR—Continued

55 FR Page

Chapter I—Continued

Regulation at 54 FR 25011 effective date delayed to 12–31–90; (a)(9)(ii) revised; eff. 12–31–90 37053

173.280 Regulation at 54 FR 25012 effective date delayed to 9–1–90 21035

Regulation at 54 FR 25012 effective date delayed to 12–31–90; (a)(8)(ii) revised; eff. 12–31–90 37053

173.287 Regulation at 54 FR 25012 effective date delayed to 9–1–90 21035

Regulation at 54 FR 25012 effective date delayed to 12–31–90 37028

173.289 Regulation at 54 FR 25012 effective date delayed to 9–1–90 21035

Regulation at 54 FR 25012 effective date delayed to 12–31–90 37028

173.292 Regulation at 54 FR 25012 effective date delayed to 9–1–90 21035

Regulation at 54 FR 25012 effective date delayed to 12–31–90; heading and (a)(2)(iv) revised; eff. 12–31–90 37053

173.294 Regulation at 54 FR 25012 effective date delayed to 9–1–90 21035

Regulation at 54 FR 25012 effective date delayed to 12–31–90; (a)(3)(ii) revised; eff. 12–31–90 37053

173.295 Regulation at 54 FR 25012 effective date delayed to 9–1–90 21035

Regulation at 54 FR 25012 effective date delayed to 12–31–90; (a)(9)(iii) revised; eff. 12–31–90 37053

173.296 Regulation at 54 FR 25012 effective date delayed to 9–1–90 21035

Regulation at 54 FR 25012 effective date delayed to 12–31–90 37028

173.297 Regulation at 54 FR 25012 effective date delayed to 9–1–90 21035

49 CFR—Continued

55 FR Page

Chapter I—Continued
Regulation at 54 FR 25012 effective date delayed to 12–31–90; (a)(1) corrected; (a)(1)(ii) revised; eff. 12–31–90 37054
173.300—173.320 (Subpart G) Heading revised 52664
173.300 Removed 52665
173.300a (b)(1) and (e) amended 39981
173.300b (b)(1) amended 39981
173.306 (a)(1), (3) introductory text and (b) introductory text amended; (h) added 52665
173.308 (a) introductory text amended 52665
173.314 Revised 52665
173.315 Regulation at 54 FR 25012 effective date delayed to 9–1–90 21035
Regulation at 54 FR 25012 effective date delayed to 12–31–90; (a)(1) introductory text removed; (i)(1)(ii) revised; eff. 12–31–90 37054
(a)(2) added 52667
173.318 Regulation at 54 FR 25013 effective date delayed to 9–1–90 21035
Regulation at 54 FR 25013 effective date delayed to 12–31–90; (b)(2)(i)(C) revised; (b)(2)(ii) amended; eff. 12–31–90 37054
173.321 Added 52667
173.322 Added 52667
173.323 Added 52667
173.324 Added 52668
173.325—173.388 (Subpart H) Removed 52667
173.334 Added 52668
173.335 Added 52669
173.336 Added 52669
173.337 Added 52669
173.338 Added 52669
173.340 Added 52669
173.346 Regulation at 54 FR 25013 effective date delayed to 9–1–90 21035
Regulation at 54 FR 25013 effective date delayed to 12–31–90; (a)(12) revised; eff. 12–31–90 37054
173.347 Regulation at 54 FR 25013 effective date delayed to 9–1–90 21035

49 CFR—Continued

55 FR Page

Chapter I—Continued
Regulation at 54 FR 25013 effective date delayed to 12–31–90 37028
173.352 Regulation at 54 FR 25013 effective date delayed to 9–1–90 21035
Regulation at 54 FR 25013 effective date delayed to 12–31–90 37028
173.353 Regulation at 54 FR 25013 effective date delayed to 9–1–90 21035
Regulation at 54 FR 25013 effective date delayed to 12–31–90; (e)(3) revised; eff. 12–31–90 37054
173.354 Regulation at 54 FR 25014 effective date delayed to 9–1–90 21035
Regulation at 54 FR 25014 effective date delayed to 12–31–90; (a)(5) amended; eff. 12–31–90 37054
173.358 Regulation at 54 FR 25014 effective date delayed to 9–1–90 21035
Regulation at 54 FR 25014 effective date delayed to 12–31–90; (a)(14)(vi) and (vii) revised; eff. 12–31–90 37054
173.359 Regulation at 54 FR 25014 effective date delayed to 9–1–90 21035
Regulation at 54 FR 25014 effective date delayed to 12–31–90; (a)(16)(v) and (vi) revised; eff. 12–31–90 37054
173.369 Regulation at 54 FR 25014 effective date delayed to 9–1–90 21035
Regulation at 54 FR 25014 effective date delayed to 12–31–90; (a)(14)(iii) revised; eff. 12–31–90 37055
173.373 Regulation at 54 FR 25014 effective date delayed to 9–1–90 21035
Regulation at 54 FR 25014 effective date delayed to 12–31–90; (a)(6)(i) and (iv) revised; eff. 12–31–90 37055
173.374 Regulation at 54 FR 25014 effective date delayed to 9–1–90 21035

49 CFR—Continued

55 FR Page

Chapter I—Continued

Regulation at 54 FR 25014 effective date delayed to 12–31–90; (a)(4)(v) revised; eff. 12–31–90 37055

173.416 (d), (e), (f) and (g) amended; (c) revised 52670

173.417 (a)(1), (2), (6)(iii), (b)(1), (2) and (5) amended; (a)(5), (6) introductory text and (b)(4) revised 52670

173.421–2 Revised 52670

173.471 (e) amended 39981

(e) removed 52670

173.473 Introductory text revised 52670

173.500—173.510 (Subpart J) Removed 52670

173.605—173.655 (Subpart K) Removed 52670

173.800—173.862 (Subpart L) Removed 52670

173.906—173.1090 (Subpart M) Removed 52670

173.1200—173.1201 (Subpart N) Removed 52670

173.1300 (Subpart O) Removed 52670

173 Appendix B amended 52670

Appendix C added 52671

Appendix D added 52671

Appendix E added 52673

Appendix F added 52677

174.8 (b) and (c) amended 52677

174.10 (a) and (d) amended 52677

174.14 (b) amended 52677

174.16 (a), (b)(1), (2) and (3) amended 52677

174.18 Amended 52677

174.25 (a)(2) table revised 52677

(a)(2)(i), (ii), (c) and (d) amended 52678

174.26 (a) amended 52678

174.47 (a) and (b) amended 52678

174.49 Amended 52678

174.50 (d) amended 52678

174.67 (a)(3) and (k) amended 52678

174.81 Revised 52678

174.82—174.93 (Subpart D) Heading revised 52680

174.82 Added 52680

174.83 Revised 52680

174.84 Revised 52680

174.85 Revised 52680

174.86 Removed 52681

174.87 Removed 52681

174.88 Removed 52681

49 CFR—Continued

55 FR Page

Chapter I—Continued

174.89 Removed 52681

174.90 Removed 52681

174.91 Removed 52681

174.92 Removed 52681

174.93 Removed 52681

174.100—174.115 (Subpart E) Heading revised 52681

174.100 Heading, (a) and (b) amended 52681

174.101 Heading, (a) through (f), (h) through (l), (n) introductory text, (1), (2), (3), (o) introductory text, (1), (2), (3) and (4) amended 52681

174.102 (a) and (b) amended 52681

174.103 (a), (c) introductory text, (d) and (e) amended 52681

174.104 Heading, (a), (b) introductory text, (4), (7), (8), (10), (11) and (c) through (f) amended 52682

174.105 Heading and text amended 52682

174.106 Heading, (a), (b) and (c) amended 52682

174.107 Heading, (a) and (b) amended 52682

174.109 Amended 52682

174.110 Amended 52682

174.112 Heading, (a), (b), (c) introductory text and (3) amended 52682

174.114 (a) designation removed; heading and text amended 52682

174.115 Heading, (a), (b) introductory text and (3) amended 52682

174.200—174.290 (Subpart F) Heading revised 52682

174.200 (a), (b), (c) introductory text and (4) amended 52682

174.201 Heading, (a) introductory text and (c) amended 52682

174.204 (a) introductory text and (2)(i) amended 52682

174.208 (a) and (b) amended 52682

174.280 Heading and text amended 52682

174.290 Revised 52683

174.300—174.380 (Subpart G) Heading revised 52683

174.300 (a), (b), (c) introductory text and (4) amended; (d) removed; (e) redesignated as (d) and amended 52683

49 CFR—Continued

55 FR Page

Chapter I—Continued

174.304 Heading and text amended 52683
174.380 Revised 52683
174.410—174.480 (Subpart H) Heading revised 52683
174.410 (d) amended 52683
174.430 Added 52684
174.480 Revised 52684
174.510—174.580 (Subpart I) Heading revised 52684
174.510 Amended 52684
174.580 Revised 52684
174.600—174.680 (Subpart J) Heading revised 52684
174.600 Revised 52684
174.615 (a) and (b) amended 52684
174.680 Revised 52684
174.700—174.750 (Subpart K) Heading revised 52684
174.700 Heading, (b), (c), (d), (e) introductory text, (1), (2), (3) and (f) amended 52684
174.715 (a) and (b) amended 52684
174.750 (a) and (b) amended 52684
174.800—174.812 (Subpart L) Heading revised 52685
174.800 Heading and (a) amended; (a) designation, (b) and (c) removed 52685
174.810 (a) and (b) amended 52685
174.812 Removed 52685
174.840 (Subpart M) Heading revised 52685
174.840 Amended 52685
175 Authority citation revised 875, 39981
175.10 (a)(7) amended 39981
(a)(4)(i), (ii), (8), (13), (14)(vii), (17) and (19) amended 52685
175.25 (a)(2)(ii) amended 52685
175.30 (c)(2) amended 52685
175.33 (b) revised 875
Regulation at 55 FR 875 effective date delayed to 9–17–90 20796
Regulation at 55 FR 875 effective date delayed to 12–31–90; (b) republished 33711, 33713
(a)(3) and (6) amended 52685
175.45 (c) amended 39981
(a)(2) and (3) amended 52685
175.75 (a)(2), (3) introductory text, (ii) and (b) amended 52685
175.81 (b) amended 52685

49 CFR—Continued

55 FR Page

Chapter I—Continued

175.85 (c)(1)(i) and (ii) amended; (c)(1)(iii) and (vii) removed; (c)(1)(iv) through (vi) redesignated as (c)(1)(iii) through (v); new (c)(1)(iii) and (iv) amended; new (c)(1)(v) revised 52685
175.90 (d) introductory text amended 52685
175.305 (a) amended 52685
175.310 Introductory text, (c)(1), (2) and (3) amended 52686
175.320 (a) table revised; (b)(8), (9), (c) introductory text and (4)(iii) amended 52686
175.630 (a) amended 39981
Heading revised; (a) and (b) amended 52686
175.640 Heading revised; text amended 52687
175.700 Heading, (b) and (c) amended 52687
175.701 Heading, (b)(1) and (2) amended 52687
175.702 Heading, (a), (b)(2)(i), (iii) and (iv) amended 52687
175.703 Heading, (a), (b), (c) introductory text, (1) and (d)(3) amended 52687
175.705 Heading and (a) amended 52687
176 Authority citation revised 52687
176.2 Added 52687
176.3 (b) revised 52688
176.4 Added 52688
176.5 (b)(6) and (d) revised; (e) removed 52688
176.9 Revised 52688
176.11 (a)(3) added; eff. 12–31–90 33713
(a), (c) and (f) revised 52688
176.30 Regulation at 54 FR 27146 effective date delayed to 6–4–90 874
Regulation at 54 FR 27146 effective date delayed to 9–17–90 20796
Regulation at 54 FR 27146 effective date delayed to 12–31–90; (a)(3)(i) republished 33711, 33714
(a)(3) and (5) revised 52689
176.54 Heading, (b)(1) and (2) revised 52689
176.57 Revised 52689
176.58 Revised 52689

49 CFR—Continued

55 FR Page

Chapter I—Continued

176.65 Revised 52689
176.69 (a) and (b) revised; (d) and (e) added 52689
176.74 (c) amended 52689
176.76 Regulation at 54 FR 25014 effective date delayed to 9–1–90 21035
Regulation at 54 FR 25014 effective date delayed to 12–31–90; (b) corrected; eff. 12–31–90 37055
Heading, (a) introductory text, (2), (5) and (b) revised; (a)(9) and (c) removed 52689
176.78 (a), (d), (e)(1), (f)(3) and (l) revised 52689
176.83 Revised 52690
176.84 Added 52693
176.90 Amended 52695
176.91 Amended 52695
176.92 Amended 52695
176.93 (a) introductory text revised 52695
176.96 Revised 52695
176.98 Amended 52695
176.99 Revised 52695
176.100—176.194 (Subpart G) Revised 52696
176.200—176.230 (Subpart H) Revised 52704
176.305—176.340 (Subpart I) Revised 52705
176.400—176.419 (Subpart J) Revised 52706
176.600—176.605 (Subpart L) Revised 52708
176.800—176.805 (Subpart N) Revised 52708
176.900—176.906 (Subpart O) Revised 52708
177.800 Regulation at 54 FR 25015 effective date delayed to 9–1–90 21035
Regulation at 54 FR 25015 effective date delayed to 12–31–90 37028
177.801 Regulation at 54 FR 25015 effective date delayed to 9–1–90 21035
Regulation at 54 FR 25015 effective date delayed to 12–31–90 37028

49 CFR—Continued

55 FR Page

Chapter I—Continued

177.802 Regulation at 54 FR 25015 effective date delayed to 9–1–90 21035
Regulation at 54 FR 25015 effective date delayed to 12–31–90 37028
177.806 (b) amended 52710
177.810 Amended 52710
177.811 (a) amended 52710
177.814 Regulation at 54 FR 25015 effective date delayed to 9–1–90 21035
Regulation at 54 FR 25015 effective date delayed to 12–31–90 37028
177.816 (a) and (b)(2) amended 52710
177.818 Heading and (a) introductory text amended 52710
177.821 (d) and (f) amended 52710
177.822 Regulation at 54 FR 25015 effective date delayed to 9–1–90 21035
Regulation at 54 FR 25015 effective date delayed to 12–31–90 37028
177.824 Regulation at 54 FR 25015 effective date delayed to 9–1–90 21035
Revised; eff. 12–31–90 37055
177.825 (a) and (b) revised; eff. 10–1–90 19212
(b)(1)(iii)(A) amended 39981
Heading, (a) introductory text, (3), (b) introductory text, (2)(i), (c) introductory text, (d) introductory text, (1)(i), (ii), (2)(iv), (f) introductory text and (3) amended 52710
177.826 Heading, (a), (b)(2) and (3) amended 52710
177.834 (a), (c), (d), (f), (g), (l)(1), (2)(i) introductory text, (i)(B), (iii)(A) introductory text, (A)(*4*) and (B) introductory text amended 52710
177.835 Regulation at 54 FR 25015 effective date delayed to 9–1–90 21035
Regulation at 54 FR 25015 effective date delayed to 12–31–90 37028

49 CFR—Continued

55 FR Page

Chapter I—Continued

Heading, (a), (b) heading, introductory text, (1), (c) introductory text, (4)(i), (ii), (iii), (e), (f), (g) introductory text, (2) introductory text, (2)(i), (ii), (3)(i), (h) through (k) and (m) amended 52711

177.836 (a) designation removed; text amended 52711

177.837 Heading, (a) and (b) amended; (d) removed; (e) redesignated as (d); new (d) introductory text amended 52711

177.838 Heading revised; (h) added; (a), (b), (c), (e)(2), (f) and (g) amended 52711

177.839 Heading, (a), (b) and (d) amended 52712

177.840 Regulation at 54 FR 25015 effective date delayed to 9–1–90 21035

Regulation at 54 FR 25015 effective date delayed to 12–31–90 37028

Heading, (a) introductory text, (1), (b) introductory text, (d), (h) introductory text, (i) and (j) introductory text amended 52712

177.841 Heading and (e) revised; (a)(1) and (b) removed; (a)(2) designation removed; (a) introductory text, (c) and (d) introductory text amended 52712

177.842 Heading, (a), (b), (e) and (f) amended 52712

177.843 (a), (b) and (c) amended 52712

177.844 Heading revised; text amended 52712

177.848 Revised 52712

177.853 (c) amended 52714

177.854 (f) introductory text, (1), (2), (g)(2)(iv) and (h) amended 52714

177.855 Heading, (a), (b), (c), (d) Note 1, (e) and (f) amended 52714

177.856 Heading, (a), (b) and (d) amended 52714

177.857 Heading, (a), (b) and (c) amended 52714

177.858 Heading, (a), (b) introductory text and (b)(2) amended 52714

49 CFR—Continued

55 FR Page

Chapter I—Continued

177.859 Heading, (a) and (b) amended 52715

177.860 Heading, (a) introductory text, (1) and (b) amended 52715

177.861 Heading, (a), Note 1 and Note 2 amended 52715

177.870 (f) amended 39981

(b) through (g) amended 52715

177 Appendix A removed 4424

178 Heading revised 52715

178.0 Removed 52715

178.0–1 Redesignated as 178.1 52715

178.0–2 Redesignated as 178.2 and revised 52715

178.0–3 Redesignated as 178.3 and revised 52716

178.1—178.19 (Subpart A) Removed 52715

178.1 Redesignated from 178.0–1 52715

178.2 Redesignated from 178.0–2 and revised 52715

178.3 Redesignated from 178.0–3 and revised 52716

178.16–19 (c)(2) amended 39981

178.17–6 (b)(2) amended 39981

178.21 Removed 52716

178.21–1 Removed 52716

178.21–2 Removed 52716

178.21–3 Removed 52716

178.22 Removed 52716

178.22–1 Removed 52716

178.22–2 Removed 52716

178.23 Removed 52716

178.23–1 Removed 52716

178.23–2 Removed 52716

178.24 Removed 52716

178.24–1 Removed 52716

178.24–2 Removed 52716

178.24–3 Removed 52716

178.24–4 Removed 52716

178.24–5 Removed 52716

178.24–7 Removed 52716

178.24a Removed 52716

178.24a–1 Removed 52716

178.24a–2 Removed 52716

178.24a–3 Removed 52716

178.24a–4 Removed 52716

178.24a–5 Removed 52716

178.24a–6 Removed 52716

178.25 Removed 52716

178.25–1 Removed 52716

178.26 Removed 52716

178.26–1 Removed 52716

178.27 Removed 52716

49 CFR—Continued

55 FR Page

Chapter I—Continued

178.27–1 Removed 52716
178.27–2 Removed 52716
178.27–3 Removed 52716
178.27–4 Removed 52716
178.28 Removed 52716
178.28–1 Removed 52716
178.28–2 Removed 52716
178.28–3 Removed 52716
178.29 Removed 52716
178.29–1 Removed 52716
178.30 Removed 52716
178.30–1 Removed 52716
178.30–2 Removed 52716
178.31 Removed 52716
178.31–1 Removed 52716
178.32 Removed 52716
178.32–1 Removed 52716
178.32–2 Removed 52716
178.32–3 Removed 52716
178.32–4 Removed 52716
178.33 Heading revised 52716
178.33a Heading revised 52716
178.34 Redesignated as 178.360 52716
178.34–1 Redesignated as 178.360–1 52716
178.34–2 Redesignated as 178.360–2 52716
178.34–3 Redesignated as 178.360–3 52716
178.35 Removed 52716
178.35–1 Removed 52716
178.35–2 Removed 52716
178.35–3 Removed 52716
178.35–4 Removed 52716
178.35–5 Removed 52716
178.35a Removed 52716
178.35a–1 Removed 52716
178.35a–2 Removed 52716
178.35a–3 Removed 52716
178.35a–4 Removed 52716
178.45–17 (e) amended 39981
178.65–14 (d) amended 39981
178.80—178.150–7 (Subpart D) Removed 52716
178.103—178.103–6 Redesignated as 178.352—178.352–6 52716
178.104—178.104–5 Redesignated as 178.354—178.354–5 52716
178.120—178.120–5 Redesignated as 178.356–178.356–5 52716
178.121—178.121–6 Redesignated as 178.358–178.358–6 52716
178.156—178.198–4 (Subpart E) Removed 52716
178.194—178.194–7 Redesignated as 178.362—178.362–7 52716

49 CFR—Continued

55 FR Page

Chapter I—Continued

178.195—178.195–6 Redesignated as 178.364—178.364–6 52716
178.196—178.196–17 Removed 52716
178.197—178.197–16 Removed 52716
178.198—178.198–4 Removed 52716
178.205—178.226–4 (Subpart F) Removed 52716
178.230—178.241–5 (Subpart G) Removed 52716
178.270–11 (c)(1) and (2) revised 52716
178.320 Regulation at 54 FR 25015 effective date delayed to 9–1–90 21035
Revised; eff. 12–31–90 37055
178.337 Regulation at 54 FR 25015 effective date delayed to 9–1–90 21035
Regulation at 54 FR 25015 effective date delayed to 12–31–90 37028
178.337–1 Regulation at 54 FR 25015 effective date delayed to 9–1–90 21035
Regulation at 54 FR 25015 effective date delayed to 12–31–90; (e)(2) amended eff. 12–31–90 37056
178.337–2 Regulation at 54 FR 25015 effective date delayed to 9–1–90 21035
Regulation at 54 FR 25015 effective date delayed to 12–31–90 37028
178.337–3 Regulation at 54 FR 25015 effective date delayed to 9–1–90 21035
Revised; eff. 12–31–90 37056
178.337–4 Regulation at 54 FR 25017 effective date delayed to 9–1–90 21035
Regulation at 54 FR 25017 effective date delayed to 12–31–90 37028
178.337–6 Regulation at 54 FR 25017 effective date delayed to 9–1–90; (a) amended 21035, 21038
Regulation at 54 FR 25017 and 55 FR 21038 effective date delayed to 12–31–90 37028
178.337–8 Regulation at 54 FR 25017 effective date delayed to 9–1–90 21035
Regulation at 54 FR 25017 effective date delayed to 12–31–90 37028

49 CFR—Continued

55 FR Page

Chapter I—Continued

178.337–9 Regulation at 54 FR 25017 effective date delayed to 9–1–90 21035
Regulation at 54 FR 25017 effective date delayed to 12–31–90; (b)(6) revised; eff. 12–31–90 37057
178.337–11 Regulation at 54 FR 25017 effective date delayed to 9–1–90 21035
Regulation at 54 FR 25017 effective date delayed to 12–31–90; (a)(1)(v) and (c)(1) amended; eff. 12–31–90 37057
178.337–14 Regulation at 54 FR 25018 effective date delayed to 9–1–90 21035
Regulation at 54 FR 25018 effective date delayed to 12–31–90 37028
178.337–15 Regulation at 54 FR 25018 effective date delayed to 9–1–90 21035
Regulation at 54 FR 25018 effective date delayed to 12–31–90; eff. 12–31–90 37028
178.337–18 Regulation at 54 FR 25018 effective date delayed to 9–1–90 21035
Regulation at 54 FR 25018 effective date delayed to 12–31–90; (a) revised; eff. 12–31–90 37057
178.338–3 Regulation at 54 FR 25018 effective date delayed to 9–1–90 21035
Revised; eff. 12–31–90 37057
178.338–8 Regulation at 54 FR 25019 effective date delayed to 9–1–90 21035
Regulation at 54 FR 25019 effective date delayed to 12–31–90 37028
178.338–17 Regulation at 54 FR 25020 effective date delayed to 9–1–90 21035
Regulation at 54 FR 25020 effective date delayed to 12–31–90; (b) revised; eff. 12–31–90 37058
178.338–19 (a) revised; (b) amended; eff. 12–31–90 37058
178.340 Regulation at 54 FR 25020 effective date delayed to 9–1–90 21035
Regulation at 54 FR 25020 effective date delayed to 12–31–90 37028

49 CFR—Continued

55 FR Page

Chapter I—Continued

178.341 Regulation at 54 FR 25020 effective date delayed to 9–1–90 21035
Regulation at 54 FR 25020 effective date delayed to 12–31–90 37028
178.342 Regulation at 54 FR 25020 effective date delayed to 9–1–90 21035
Regulation at 54 FR 25020 effective date delayed to 12–31–90 37028
178.343 Regulation at 54 FR 25020 effective date delayed to 9–1–90 21035
Regulation at 54 FR 25020 effective date delayed to 12–31–90 37028
178.345 Regulation at 54 FR 25020 effective date delayed to 9–1–90 21035
(b)(3) introductory text amended 21038
Regulation at 54 FR 25020 effective date delayed to 12–31–90 37028
178.345–1 Regulation at 54 FR 25020 effective date delayed to 9–1–90 21035
Regulation at 54 FR 25020 effective date delayed to 12–31–90; (c) amended; (h) and (i)(2); eff. 12–31–90 37059
178.345–2 Regulation at 54 FR 25021 effective date delayed to 9–1–90 21035
Regulation at 54 FR 25021 effective date delayed to 12–31–90; (a) introductory text, (1), (b) and (c) introductory text revised; eff. 12–31–90 37059
178.345–3 Regulation at 54 FR 25021 effective date delayed to 9–1–90 21035
Revised; eff. 12–31–90 37059
178.345–4 Regulation at 54 FR 25022 effective date delayed to 9–1–90 21035
Regulation at 54 FR 25022 effective date delayed to 12–31–90 37028
178.345–5 Regulation at 54 FR 25022 effective date delayed to 9–1–90 21035

49 CFR—Continued

55 FR Page

Chapter I—Continued

Regulation at 54 FR 25022 effective date delayed to 12–31–90 37028

178.345–6 Regulation at 54 FR 25023 effective date delayed to 9–1–90..... 21035

Regulation at 54 FR 25023 effective date delayed to 12–31–90 37028

178.345–7 Regulation at 54 FR 25023 effective date delayed to 9–1–90..... 21035

Revised; eff. 12–31–90 37060

178.345–8 Regulation at 54 FR 25023 effective date delayed to 9–1–90..... 21035

Regulation at 54 FR 25023 effective date delayed to 12–31–90; (a)(3) amended; (a) introductory text, (1) introductory text, (5), (b) introductory text, (c) introductory text, (d) introductory text, (1), (2)(i) and (3) revised; eff. 12–31–90 37061

178.345–9 Regulation at 54 FR 25025 effective date delayed to 9–1–90..... 21035

Regulation at 54 FR 25025 effective date delayed to 12–31–90; (c) through (g) redesignated as (d) through (h); new (c) added; (a) and (b) new (d) and (h) revised; eff. 12–31–90 37061

178.345–10 Regulation at 54 FR 25025 effective date delayed to 9–1–90; (b)(3) introductory text amended.....21035, 21038

Regulation at 54 FR 25025 and 21038 effective date delayed to 12–31–90; (e) introductory text amended; (a), (b)(2) through (4), (c), (d), (e) introductory text, (g)(1) and (h)(3) revised; eff. 12–31–90 37062

178.345–11 Regulation at 54 FR 25026 effective date delayed to 9–1–90..... 21035

Revised; eff. 12–31–90 37062

178.345–12 Regulation at 54 FR 25026 effective date delayed to 9–1–90..... 21035

Revised; eff. 12–31–90 37062

178.345–13 Regulation at 54 FR 25026 effective date delayed to 9–1–90..... 21035

49 CFR—Continued

55 FR Page

Chapter I—Continued

Regulation at 54 FR 25026 effective date delayed to 12–31–90; (b)(2) revised; eff. 12–31–90 37063

178.345–14 Regulation at 54 FR 25027 effective date delayed to 9–1–90..... 21035

Regulation at 54 FR 25027 effective date delayed to 12–31–90; (e)(1) amended; (b) introductory text, (3), (7) through (15), (c)(1), (2), (8) and (d) revised; eff. 12–31–90 37063

178.345–15 Regulation at 54 FR 25028 effective date delayed to 9–1–90..... 21035

Revised; eff. 12–31–90 37063

178.346 Regulation at 54 FR 25028 effective date delayed to 9–1–90..... 21035

Regulation at 54 FR 25028 effective date delayed to 12–31–90; (d)(3) and (8) revised; eff. 12–31–90.....37063

178.346–1 Regulation at 54 FR 25028 effective date delayed to 9–1–90..... 21035

Regulation at 54 FR 25028 effective date delayed to 12–31–90 37028

178.346–2 Regulation at 54 FR 25028 effective date delayed to 9–1–90..... 21035

Regulation at 54 FR 25028 effective date delayed to 12–31–90; (a) Table I amended; eff. 12–31–90.....37064

178.346–3 Regulation at 54 FR 25029 effective date delayed to 9–1–90..... 21035

Regulation at 54 FR 25029 effective date delayed to 12–31–90 37028

178.346–4 Regulation at 54 FR 25029 effective date delayed to 9–1–90..... 21035

Regulation at 54 FR 25029 effective date delayed to 12–31–90 37028

178.346–5 Regulation at 54 FR 25029 effective date delayed to 9–1–90..... 21035

Regulation at 54 FR 25029 effective date delayed to 12–31–90 37028

49 CFR—Continued

55 FR Page

Chapter I—Continued

178.346–6 Regulation at 54 FR 25029 effective date delayed to 9–1–90 21035
Regulation at 54 FR 25029 effective date delayed to 12–31–90 37028
178.346–7 Regulation at 54 FR 25029 effective date delayed to 9–1–90 21035
Regulation at 54 FR 25029 effective date delayed to 12–31–90 37028
178.346–8 Regulation at 54 FR 25029 effective date delayed to 9–1–90 21035
Regulation at 54 FR 25029 effective date delayed to 12–31–90 37028
178.346–9 Regulation at 54 FR 25029 effective date delayed to 9–1–90 21035
Regulation at 54 FR 25029 effective date delayed to 12–31–90 37028
178.346–10 Regulation at 54 FR 25029 effective date delayed to 9–1–90 21035
Regulation at 54 FR 25029 effective date delayed to 12–31–90; (b)(2), (c) and (d) revised; eff. 12–31–90 37064
178.346–11 Regulation at 54 FR 25029 effective date delayed to 9–1–90 21035
Regulation at 54 FR 25029 effective date delayed to 12–31–90 37028
178.346–12 Regulation at 54 FR 25029 effective date delayed to 9–1–90 21035
Regulation at 54 FR 25029 effective date delayed to 12–31–90 37028
178.346–13 Regulation at 54 FR 25029 effective date delayed to 9–1–90 21035
Regulation at 54 FR 25029 effective date delayed to 12–31–90; (c) revised; eff. 12–31–90 37064
178.346–14 Regulation at 54 FR 25029 effective date delayed to 9–1–90 21035
Regulation at 54 FR 25029 effective date delayed to 12–31–90 37028

49 CFR—Continued

55 FR Page

Chapter I—Continued

178.346–15 Regulation at 54 FR 25029 effective date delayed to 9–1–90 21035
Regulation at 54 FR 25029 effective date delayed to 12–31–90 37028
178.347 Regulation at 54 FR 25029 effective date delayed to 9–1–90 21035
Regulation at 54 FR 25029 effective date delayed to 12–31–90 37064
178.347–1 Regulation at 54 FR 25029 effective date delayed to 9–1–90 21035
Regulation at 54 FR 25029 effective date delayed to 12–31–90; (d) introductory text, (3) and (8) revised; eff. 12–31–90 37028
178.347–2 Regulation at 54 FR 25030 effective date delayed to 9–1–90 21035
Regulation at 54 FR 25030 effective date delayed to 12–31–90; (a) Tables I and II amended; eff. 12–31–90 37064
178.347–3 Regulation at 54 FR 25030 effective date delayed to 9–1–90 21035
Regulation at 54 FR 25030 effective date delayed to 12–31–90 37028
178.347–4 Regulation at 54 FR 25030 effective date delayed to 9–1–90 21035
Regulation at 54 FR 25030 effective date delayed to 12–31–90 37028
178.347–5 Regulation at 54 FR 25030 effective date delayed to 9–1–90 21035
Regulation at 54 FR 25030 effective date delayed to 12–31–90 37028
178.347–6 Regulation at 54 FR 25030 effective date delayed to 9–1–90 21035
Regulation at 54 FR 25030 effective date delayed to 12–31–90 37028
178.347–7 Regulation at 54 FR 25030 effective date delayed to 9–1–90 21035

49 CFR—Continued

55 FR Page

Chapter I—Continued

Regulation at 54 FR 25030 effective date delayed to 12–31–90 37028

178.347–8 Regulation at 54 FR 25030 effective date delayed to 9–1–90 21035

Regulation at 54 FR 25030 effective date delayed to 12–31–90 37028

178.347–9 Regulation at 54 FR 25030 effective date delayed to 9–1–90 21035

Regulation at 54 FR 25030 effective date delayed to 12–31–90 37028

178.347–10 Regulation at 54 FR 25030 effective date delayed to 9–1–90 21035

Regulation at 54 FR 25030 effective date delayed to 12–31–90; (a) amended; (b) and (d) revised; eff. 12–31–90 37064

178.347–11 Regulation at 54 FR 25030 effective date delayed to 9–1–90 21035

Regulation at 54 FR 25030 effective date delayed to 12–31–90 37028

178.347–12 Regulation at 54 FR 25030 effective date delayed to 9–1–90 21035

Regulation at 54 FR 25030 effective date delayed to 12–31–90 37028

178.347–13 Regulation at 54 FR 25030 effective date delayed to 9–1–90 21035

Regulation at 54 FR 25030 effective date delayed to 12–31–90 37028

178.347–14 Regulation at 54 FR 25030 effective date delayed to 9–1–90 21035

Regulation at 54 FR 25030 effective date delayed to 12–31–90 37028

178.347–15 Regulation at 54 FR 25031 effective date delayed to 9–1–90 21035

Regulation at 54 FR 25031 effective date delayed to 12–31–90 37028

178.348 Regulation at 54 FR 25031 effective date delayed to 9–1–90 21035

49 CFR—Continued

55 FR Page

Chapter I—Continued

Regulation at 54 FR 25031 effective date delayed to 12–31–90 37028

178.348–1 Regulation at 54 FR 25031 effective date delayed to 9–1–90 21035

Regulation at 54 FR 25031 effective date delayed to 12–31–90; (d), (e)(1), (2) introductory text, (iii) and (viii) revised; eff. 12–31–90 37065

178.348–2 Regulation at 54 FR 25031 effective date delayed to 9–1–90 21035

Regulation at 54 FR 25031 effective date delayed to 12–31–90; (a) Tables I and II amended; eff. 12–31–90 37065

178.348–3 Regulation at 54 FR 25032 effective date delayed to 9–1–90 21035

Regulation at 54 FR 25032 effective date delayed to 12–31–90 37028

178.348–4 Regulation at 54 FR 25032 effective date delayed to 9–1–90 21035

Regulation at 54 FR 25032 effective date delayed to 12–31–90 37028

178.348–5 Regulation at 54 FR 25032 effective date delayed to 9–1–90 21035

Regulation at 54 FR 25032 effective date delayed to 12–31–90 37028

178.348–6 Regulation at 54 FR 25032 effective date delayed to 9–1–90 21035

Regulation at 54 FR 25032 effective date delayed to 12–31–90 37028

178.348–7 Regulation at 54 FR 25032 effective date delayed to 9–1–90 21035

Regulation at 54 FR 25032 effective date delayed to 12–31–90 37028

178.348–8 Regulation at 54 FR 25032 effective date delayed to 9–1–90 21035

Regulation at 54 FR 25032 effective date delayed to 12–31–90 37028

49 CFR—Continued

55 FR Page

Chapter I—Continued

178.348–9 Regulation at 54 FR 25032 effective date delayed to 9–1–90 21035
Revised; eff. 12–31–90 37065
178.348–10 Regulation at 54 FR 25032 effective date delayed to 9–1–90 21035
Regulation at 54 FR 25032 effective date delayed to 12–31–90; (a) amended; (b) and (d)(3) revised; eff. 12–31–90 37065
178.348–11 Regulation at 54 FR 25032 effective date delayed to 9–1–90 21035
Regulation at 54 FR 25032 effective date delayed to 12–31–90 37028
178.348–12 Regulation at 54 FR 25032 effective date delayed to 9–1–90 21035
Regulation at 54 FR 25032 effective date delayed to 12–31–90 37028
178.348–13 Regulation at 54 FR 25032 effective date delayed to 9–1–90 21035
Regulation at 54 FR 25032 effective date delayed to 12–31–90 37028
178.348–14 Regulation at 54 FR 25032 effective date delayed to 9–1–90 21035
Regulation at 54 FR 25032 effective date delayed to 12–31–90 37028
178.348–15 Regulation at 54 FR 25032 effective date delayed to 9–1–90 21035
Regulation at 54 FR 25032 effective date delayed to 12–31–90 37028
178.350—178.364–6 (Subpart K) Revised 52716
178.352—178.352–6 Redesignated from 178.103—178.103–6 52716
178.354—178.354–5 Redesignated from 178.104—178.104–5 52716
178.356—178.356–5 Redesignated from 178.120—178.120–5 52716
178.358—178.358–6 Redesignated from 178.121—178.121–6 52716
178.360 Redesignated from 178.34 52716
178.360–1 Redesignated from 178.34–1 52716

49 CFR—Continued

55 FR Page

Chapter I—Continued

178.360–2 Redesignated from 178.34–2 52716
178.360–3 Redesignated from 178.34–3 52716
178.362—178.362–7 Redesignated from 178.194—178.194–7 52716
178.364—178.364–6 Redesignated from 178.195—178.195–6 52716
178.500—178.523 (Subpart L) Added 52716, 52717
178.600—178.609 (Subpart M) Added 52716, 52723
178 Appendix A heading revised 52728
Appendix B added 52728
179.101–1 Table amended 52728
179.102–1 (a)(2) through (6) removed 52728
179.102–2 (a)(1), (2) and (3) removed; (a)(4) redesignated as new (a)(1) 52728
179.102–3 Removed 52728
179.102–4 (a) and (l) removed 52728
179.102–5 Removed 52728
179.102–6 Removed 52728
179.102–7 Removed 52728
179.102–8 Removed 52728
179.102–9 Removed 52728
179.102–10 Removed 52728
179.102–11 Removed 52728
179.102–12 Removed 52728
179.102–13 Removed 52728
179.102–14 Removed 52728
179.102–15 Removed 52728
179.102–16 Removed 52728
179.102–17 (a) amended; (m) removed 52728
179.102–20 Removed 52728
179.105 Heading revised 52728
179.105–1 Revised 52728
179.105–2 Removed 52729
179.105–3 Removed 52729
179.105–4 (c) amended 39981
(a) introductory text amended 52729
179.105–7 (a) amended; (c) revised 52729
179.105–8 (d) and (e) added 52729
179.106—179.106–4 Removed 52729
179.200–18 (b)(1) and (4) revised 52729
179.201–1 (a) table amended 52729
179.202—179.202–22 Removed 52729
179.203–1 (c) and (d) removed; (e) redesignated as (c) 52729

49 CFR—Continued

55 FR Page

Chapter I—Continued

179.203–2 (a)(1) removed; (a)(2) through (4) redesignated as (a)(1) through (3) 52729
179.300–7 (a) revised 27642
179.302 Removed 52729
180 Regulation at 54 FR 25032 effective date delayed to 9–1–90; authority citation revised 21035, 21038
Regulation at 54 FR 25032 effective date delayed to 12–31–90 37028
180.401 Amended; eff. 12–31–90 37065
180.403 Amended; eff. 12–31–90 37065
180.405 Effective date delayed to 9–1–90; (b), (c)(1) table, (f) introductory text, (f)(2)(i), (4)(i), (g)(1), (2), (3), and (h) amended 21035, 21038
Regulation at 54 FR 21038 effective date delayed to 12–31–90; (c)(2)(iii) and (e) amended; (b), (f) introductory text, (1)(ii) introductory text, (2), (4), (g)(1), (2), (h), and (k) introductory text revised; eff. 12–31–90 37066
180.407 Effective date delayed to 9–1–90; (g)(1)(iv) amended 21035, 21038
Regulation at 54 FR 21038 effective date delayed to 12–31–90; (e)(3) removed; (a)(4) and (5), (e)(4) through (6) redesignated as (a)(5) and (6), and (e)(3) through (5), (g)(1)(iii) through (viii) redesignated as (g)(1)(iv) through (g)(1)(ix); new (a)(4), (d)(2)(ix), (f)(3), (4), (g)(1)(iii) added; heading, (b) introductory text, (3), (c), (d)(1), (2)(v) through (viii), (3), (4), (e)(2)(ii), (f)(1)(ii), (g)(5)(ii), (6), (h)(1), (3), (i) and new (e)(3) and new (g)(1)(ix) revised; eff. 12–31–90 37067
180.409 Revised; eff. 12–31–90 37069
180.413 Effective date delayed to 9–1–90; (a) introductory text amended 21035, 21038

49 CFR—Continued

55 FR Page

Chapter I—Continued

Regulation at 54 FR 21038 effective date delayed to 12–31–90; (a) introductory text, (b)(5), (c), (d)(1) introductory text, (iii), (v) and (3) revised; (b)(1)(vi)(A) amended; eff. 12–31–90 37069
180.415 Revised; eff. 12–31–90 37069
180.417 Effective date delayed to 9–1–90; (a)(3) heading amended 21035, 21038
Regulation at 54 FR 21039 effective date delayed to 12–31–90; (a)(1) and (3)(ii) amended; (b)(1)(vi) and (viii) revised; eff. 12–31–90 37070

1991

49 CFR

56 FR Page

Chapter I

106.3 (a) revised 66156
106 Appendix A amended 66156
107 Authority citation revised 8621
107.1 (a) amended 66156
107.3 Amended 8621
Amended 66157
107.5 (a) and (b) amended 8621
107.7 (a) and (c) amended 8621
107.9 (c) amended 8622
107.103 (a), (b)(1) and (c) amended 8621
107.105 (a)(1) amended 8621
107.107 Amended 8621
107.109 (b), (c) introductory text, (2), (d) and (e) amended 8621
(a) revised 8622
107.111 (a), (b)(1) and (c) amended 8621
(d) revised 8622
107.113 (c) amended 8621
107.115 (a), (b) and (c) amended 8621
107.117 (a) amended 8621
107.119 (b), (c), (d) and (e) amended 8621
107.121 Amended 8621
107.123 (a) and (b) amended 8621
107.201 (a) and (d) revised 8622
107.202 Added 8622
107.203—107.211 Undesignated center heading revised 8622
107.203 (a), (b) and (c) revised; (d) added 8622

49 CFR—Continued

56 FR Page

Chapter I—Continued
107.205 (a), (b) and (c) amended 8621
107.207 (a) and (b) introductory text amended 8621
(b)(1) amended 8622
107.209 Heading, (a) and (b) revised; (c) removed; (d) through (f) redesignated as (c) through (e) and revised 8623
107.211 Amended 8623
107.215—107.225 Undesignated center heading amended 8623
107.215 (b)(1) amended 8621
(b) introductory text, (4) and (5) amended; (a) revised 8623
(b)(4) and (5) correctly revised 15510
(b)(6), (7) and (8) revised 66156
107.217 (a), (b)(2), (c), (d) and (e) amended 8621
107.219 (a) through (d) amended 8621
(c) through (e) amended 8623
107.221 (a) and (d) amended 8621
(b) introductory text and (e) revised 8623
107.223 Amended 8621
107.227 Added 8623
107.299—107.339 (Subpart D) Authority citation revised 8624
107.299 Amended 8624
107.301 Amended 8621
107.303 Amended 8621
107.305 (a) through (d) amended 8621
107.309 (a) and (b)(1) amended 8621
107.311 (a) and (b)(1) amended 8624
107.317 (c) amended 66157
107.327 (a)(1) amended 8621
(a)(1) corrected 15510
107.329 Revised 8624
107.333 Revised 8624
107.335 Amended 8621
Corrected 15510
107.336 Added 8624
107.401 (b) amended 66157
107.402 (a), (b)(6) and (c) amended 66157
107.403 (a) and (b) amended 66157
107.404 (a)(3) and (b) amended 66157
107.405 (a) and (b) amended 66157
107.502 (d) amended 66157

49 CFR—Continued

56 FR Page

Chapter I—Continued
107.504 (c) amended 27875
107.601—107.603 (Subpart G) Removed 66157
171 Authority citation revised 8624, 47161
171.1 (c) added 8624
171.2 (f) and (g) added 8624
171.3 Note 1 amended 66157
171.4 Removed 66157
171.5 Removed 66157
171.6 Revised 66157
171.7 (a)(3) table amended; eff. 1–15–92 57562
(a) introductory text, (3) and (b) table amended 66158
171.8 Amended; eff. 3–30–92 49987
Amended 66158
171.10 Revised 66159
171.11 (c) and (d)(9) revised; (d)(12) added 66159
171.12 (b) revised; (c) introductory text amended; (c)(1) and (2) added 66159
171.12a (a), (b) introductory text and (4) amended; (b)(1), (5) and (13) revised; (b)(14) added 66160
171.14 Revised 47161
(b)(1)(iii) removed; (b)(2)(ii) and (4)(ii) revised 49830
Republished 66161
171.19 Nomenclature change 66162
171.20 (a) through (c) amended 66162
172 Authority citation revised 66162
172.101 Table amended 200
Regulation at 56 FR 200 effective date delayed to 9–30–91 7312
(i)(3)(iii) added; eff. 3–30–92 49987
Table amended; eff. 3–30–92 49988
(c)(8) heading and (10) heading revised; (c)(9) heading, (10)(i)(E) and (F), (c)(12)(ii) heading, (iii) heading added; (c)(10)(i) introductory text, (C), (D), (ii), (11) introductory text, (12)(i), (iii), (d)(4), (f), (i)(3) introductory text, (i), (4) and (l)(2) amended 66162
Table revised 66163

49 CFR—Continued

56 FR Page

Chapter I—Continued

172.102 (a), (b) introductory text, (c)(1) through (3), (5), (7) introductory text, (i) table and (ii) amended, (a)(1) and (2) added 66250
172.202 (a)(2), (4) and (5) revised 66252
172.203 (k)(3) amended 200
Regulation at 56 FR 200 effective date delayed to 9–30–91 7312
(g)(3) and (n) added; eff. 3–30–92 49989
(d)(1)(i) through (v), (d)(1)(vi) introductory text, (A) through (D), (vii) and (viii) redesignated as (d)(2) through (6), (7) introductory text, (i) through (iv), (d)(8) and (9); (d) introductory text added; (d)(1), (i), (k)(3), (m)(1), (2) and (3) revised 66253
(c)(2), (k) introductory text, (1), (2), (4)(ii), (iii) and (iv) amended 66254
172.302 (b)(2) and (3) revised; (f) added 66254
172.303 (b) introductory text republished; (b)(3) added 66254
172.312 (a)(2) revised; (c)(4) and (5) added 66254
172.313 (a) revised 66254
172.316 Heading revised 66254
172.320 Revised 66254
172.325 Added; eff. 3–30–92 49989
172.326 (c)(1) and (2) amended 66255
172.328 (c) introductory text revised 66255
172.330 (a)(1) and (2) revised 66255
172.332 (a) amended 66255
172.334 (a) amended 66255
172.336 Heading revised; (b)(1), (c)(2) and (3) amended 66255
172.400 (a)(3) and (b) table amended 66255
172.402 (b) and (c) redesignated as (c) and (d); (a) introductory text and new (d) revised; new (b) and new (e) added 66255
172.405 (b) removed; (c) redesignated as (b); and new (b) revised 66255

49 CFR—Continued

56 FR Page

Chapter I—Continued

172.406 (a) heading, (1)(ii), (b) heading, (c) heading, (e) introductory text and (f) heading revised; (d) heading added 66255
172.407 (d)(4) revised 66256
172.411 Revised 66256
172.415 Republished 66256
172.416 Republished 66257
172.417 Republished 66257
172.419 Republished 66257
172.420 Republished 66257
172.422 Republished 66257
172.423 Republished 66257
172.426 Republished 66257
172.427 Republished 66258
172.430 Republished 66258
172.431 Republished 66258
172.432 Republished 66258
172.436 Republished 66259
172.438 Republished 66259
172.440 Republished 66259
172.442 Republished 66259
172.446 Republished 66259
172.448 Republished 66259
172.502 (c) removed; (d) redesignated as (c); (a) heading, (b) and new (c) revised 66259
172.504 (f)(4), (7) and (8) revised; new (g) added; (a), (b), (c) introductory text, (e) Table 1, Table 2, (f) introductory text, (3) and (5) amended 66260
172.505 Heading and (b) revised; (d) added; (a) amended 66260
172.510 (c) revised; (a)(2) and (3) amended 66260
172.519 (a)(2) removed; (a)(3) and (4) redesignated as (a)(2) and (3); new (a)(2) amended; (f) revised 66260
172.522 (a) republished in part; (b) revised 66260
172.523 (a) republished in part; (b) revised 66261
172.524 (a) republished in part; (b) revised 66261
172.525 (a) republished in part; (b) revised 66261
172.526 (a)(1), (2) and (4) revised; (c)(3) amended 66261
172.528 Republished 66261
172.530 Republished 66262
172.532 Republished 66262
172.540 Republished 66262
172.542 Republished 66262

49 CFR—Continued

56 FR Page

Chapter I—Continued

172.544 Republished 66262
172.546 Republished 66263
172.547 Republished 66263
172.548 Republished 66263
172.550 Republished 66263
172.552 Republished 66263
172.553 Republished 66263
172.554 Republished 66264
172.556 Republished 66264
172.558 Republished 66264
172.560 Republished 66264
173 Authority citation revised 8624, 50665
173.2a (a)(8) and (b) table amended 66264
173.3 (c)(1) revised; (c)(3) amended 66265
173.3a Removed 66265
173.4 (b) amended..... 8624
(a)(6)(ii) revised; (b) amended 66265
173.10 (a) amended..... 66265
173.11 (a) amended..... 66279
173.12 (b) revised; (d) added 66265
173.21 (f) introductory text, (2) and (i) amended 66265
173.22 (c)(2) amended..... 66265
173.22a (b) amended..... 66279
173.24 (b)(2) revised; eff. 3–30–92..... 49989
(h) heading revised; (c)(2), (g)(2) and (g)(3) amended..... 66265
173.24a (b)(3) revised 66265
(b)(2) and (5) amended 66266
173.24b (a)(1), (3) and (d)(2) amended 66266
173.25 (a)(5) and (c) revised..... 66266
173.27 (c)(2)(i) and (f) Table 2 amended..... 66266
173.28 Heading, (b)(2)(i), (ii) and (4) table revised; (b)(4) and (5) amended..... 66266
173.29 (g) added; eff. 3–30–92 49989
173.31 (a)(7) added..... 50665
(a)(18) added..... 66266
173.32 Heading revised; (a)(5) amended..... 66266
173.32a (c), (d), (h) introductory text, (2) introductory text and (3) amended 66279
173.32c (q) added; (q)(2) amended 66266
173.33 (a)(3) revised; (c)(4), (d)(1) and (2) amended 27875

49 CFR—Continued

56 FR Page

Chapter I—Continued

173.34 (e) introductory text table amended; (e)(17) added; (f)(2) revised; eff. 1–15–92..... 57562
(c)(3) amended 66266
(e)(i)(iv), (i) introductory text, (4)(i), (6), (l) introductory text, (2) and (3) amended..... 66279
173.50—173.114a (Subpart C) Heading revised 66267
173.50 (b)(4) revised; Footnote 1 amended..... 66267
173.54 (a) and (j) amended 66267
173.56 (b)(1), (g) and (h)(3) amended 66267
173.58 (b) introductory text, (2), (c)(1)(ii) and (iii) amended; (c)(1)(iv) added..... 66267
173.59 Amended..... 66267
173.60 (b)(8) amended..... 66267
173.61 (d) amended..... 66267
173.62 (a) revised; (e) added; (b) introductory text, table, (c) table, and (d) table amended 66267
173.63 (a) introductory text amended; (d) and (e) removed 66268
173.115 (a), (c) introductory text and (2) revised 66268
173.116 (a) amended 66268
173.120 (a) revised; eff. 3–30–92..... 49989
(b)(2) revised; (a)(1) introductory text, (ii), (b)(1) and (c)(2) amended 66268
173.121 (a) table and (b)(1)(iv) table amended 66268
173.124 (a)(3)(ii), (iii), (b)(1) and (2) amended..... 66268
173.128 (c)(2) and (d) amended 66268
173.132 (a)(1) introductory text, (iii)(b), (b)(1) and (2) amended 66268
173.133 Heading and (a)(2) revised..... 66268
(a)(1) table and (b)(1)(ii) amended..... 66270
173.134 (a)(4) added; (a)(1) amended 66270
173.136 (b) amended 66270
173.137 (a), (b) and (c)(1) amended 66270
173.140 (c) added; (a) and (b) amended; eff. 3–30–92 49989

49 CFR—Continued

56 FR Page

Chapter I—Continued
Revised 66270
173.150 (f)(1), (3)(iv), (vi) and (vii) revised; (b)(3) amended 66270
173.154 (d) amended 66270
173.155 (b) amended 66270
173.156 (b) amended 66270
173.158 (e) and (h)(2) amended 66270
173.159 (d)(1) amended 66270
173.164 (b)(2), (3) and (4) redesignated as (b)(3), (4) and (5); (b)(1) redesignated in part as (b)(2); new (b)(2) and (3)(iv) amended 66270
173.171 Introductory text and (a) revised; (c) amended 66270
173.173 (a) amended 66270
173.181 (c) introductory text and (3) amended 66270
173.185 (j) introductory text revised; (k) added; (a), (i) introductory text, (j)(2) and (3) amended 66271
173.188 (a)(2) revised 66271
173.192 Introductory text and (a)(2) amended 66271
173.193 (c) redesignated as (d) and revised; (b) amended; new (c) added 66271
173.195 Heading revised 66271
173.197 Added 66271
173.202 (c) amended 66271
173.203 (c) amended 66271
173.211 (c) amended 66271
173.224 (c) table amended 66271
173.225 (b) table revised 66271
(c)(4)(i), (d)(1) Table, (2) Table amended 66274
173.226 (b) introductory text and (c)(2) amended 66274
173.227 (b) introductory text, (3)(ii)(D) and (iii)(D) amended 66274
173.230 (b)(1)(v) and (2)(v) added; (b)(1)(iii), (iv), (2)(iii) and (iv) amended 66274
173.240 (a) and (c) revised 66274
173.241 (c) revised 66275
173.242 (a) amended 66275
173.243 (a) and (b)(2) amended 66275
173.244 Heading and (b) revised; (a) amended 66275
173.245 (a)(29) introductory text amended 27875

49 CFR—Continued

56 FR Page

Chapter I—Continued
(a) added 66275
173.247 Added; eff. 3–30–92 49989
(c)(3) corrected 65541
(c)(5), (d)(2), (3) and (4) amended 67543
173.249 (b) and (c) amended 66275
173.300a (b)(1), (c) through (e) and (g) through (i) amended 66279
173.300b (b)(1) and (c) through (g) amended 66279
173.300c (a) introductory text and (b) amended 66279
173.302 (h) added; (a) introductory text and (4)(iii) amended 66275
173.303 (e) added; eff. 1–15–92 57563
173.304 (g) added; (a) introductory text, (1) and (4)(ii) amended 66275
173.305 (a) and (d) amended 66275
(c)(1) amended 66279
173.306 (a)(2) and (3) amended 55472
(i) added; (a) introductory text, (3)(i), (b) introductory text, (1), (3) and (h) introductory text amended 66275
173.308 (a)(1), (2), (3) and (c) amended 66276
173.314 (c) revised; (g)(3) added 66276
(a), (b)(3) and (6) amended 66277
173.315 Heading revised; (a)(2) removed; (a) table and (c) introductory text amended 66277
(i)(12) amended 66279
173.318 (e) amended 66279
173.323 (b)(1) and (4) revised; (a) amended 66279
173.369 (a)(14)(iii) amended 27875
173.373 (a)(6)(iv) amended 27875
173.374 (a)(4)(v) amended 27875
173.386 (d)(3) removed; (a)(1) and (3) revised 200
Regulation at 56 FR 200 effective date delayed to 9–30–91 7312
173.387 (a) revised 200
Regulation at 56 FR 200 effective date delayed to 9–30–91 7312
173.421–1 (b)(2) amended 8624
Heading and (a) revised 66279
173.421–2 (d) removed 8624, 66279
173.457 (b)(4) amended 66279
173.465 (d) amended 66279
173.471 (f) amended (OMB number) 66279

49 CFR—Continued

56 FR Page

Chapter I—Continued

173.473 (a)(1) and (3) amended.....66279
173 Appendix B amended 66279
Appendix E amended; Appendix G added.....66280
174.25 (a)(2) table, (b)(1)(i) and (c) amended.....66280
174.67 (a)(3) amended.....66280
174.81 (d) table and (e)(5) revised.....66280
(b), (e)(3) and (h) amended.....66281
174.82 (a) amended.....66281
174.83 (b)(2) amended.....66281
174.84 Amended.....66281
174.86 Added; eff. 3–30–92.....49990
174.200 (c)(4) amended 66281
175.10 (a)(2), (4)(ii) and (15) amended 66281
175.320 (b)(9) amended 66281
175.701 (c) introductory text amended.....66281
176.5 (a) amended 66281
176.11 (a) amended.....66281
176.30 (a)(5)(i) amended 66281
176.69 (a) amended.....66282
176.74 (c) amended.....66282
176.76 (a)(2) amended.....66282
176.83 (a)(7)(i), (ii), (f) table, (g)(2) and (g) table amended 66282
176.84 Heading revised; (b) table, (c)(2) Table and (c)(3)(ii)(A) amended.....66282
176.99 Amended.....66282
176.132 (a)(2) amended 66282
176.136 (c) amended 66282
176.146 (d)(1) and (2) amended.....66282
176.156 (d) amended 66282
176.170 (a), (c) and (e) amended 66282
176.205 (b)(7) amended 66282
176.305 (d)(2) amended 66282
176.315 (a) amended 66282
176.410 (b) amended 66282
176.415 (c)(1), (2) and (5) revised; (a)(1), (2), (b)(1), (5), (6), (c)(3) and (4) amended 66282
176.704 (f) amended.....66283
176.905 (k) revised 66283
177.821 (f) amended.....66284
177.825 (f) introductory text amended.....66283
(b)(1)(iii)(A) and (B) amended 66284
177.826 (a) amended 66284
177.838 (g) amended 66284
177.844 Heading amended 66283

49 CFR—Continued

56 FR Page

Chapter I—Continued

177.848 (d) table and (e)(5) revised; (b), (e)(3) and (h) amended 66283
177.870 (e) amended 66283
178.2 Heading, (b) and (c) introductory text revised; (c)(1)(ii) amended.....66284
178.3 (c) added 66284
178.33–9 (a)(2) amended.....66287
178.33a Heading amended 66284
178.33a–9 (a)(2) amended 66287
178.34–4 Redesignated as 178.360–4 66284
178.36–3 Amended.....66287
178.36–20 (a)(3) amended 66287
178.37–3 Amended.....66287
178.37–20 (a)(3) amended 66287
178.38–3 Amended.....66287
178.38–20 (a)(2) amended 66287
178.39–3 Amended.....66287
178.39–19 (a)(2) amended 66287
178.42–3 Amended.....66287
178.42–14 (a)92) amended.....66287
178.44–3 Amended.....66287
178.44–23 (a)92) amended.....66287
178.45–3 Amended.....66287
178.45–17 (e) amended 66284
178.46–3 Amended.....66287
178.46–15 (a)92) amended.....66287
178.47–3 Amended.....66287
178.47–21 (a092) amended.....66287
178.50–3 Amended.....66287
178.50–19 (a)920 amended.....66287
178.51–3 Amended.....66287
178.51–19 (a)92) amended.....66287
178.53–3 Amended.....66287
178.53–18 (a)92) amended.....66287
178.55–3 Amended.....66287
178.55–20 (a)92) amended.....66287
178.56–3 Amended.....66287
178.56–19 (a)(2) amended 66287
178.57–3 Amended.....66287
178.57–20 (a)(3) amended 66287
178.58–3 Amended.....66287
178.58–21 (a)(2) amended 66287
178.59–3 (a) amended.....66287
178.59–18 (a)(2) amended 66287
178.60–3 (a) amended.....66287
178.60–22 (a)(2) amended 66287
178.61–3 Amended.....66287
178.61–20 (a)(2) amended 66287
178.65–3 (a) amended.....66287
178.65–3 (b) and (c) amended.....66287
178.65–14 (d) amended 66284
178.68–3 Amended.....66287

49 CFR—Continued

56 FR Page

Chapter I—Continued

178.68–19 (a)(2) amended 66287
178.270–2 (b) amended 66284
(c) amended 66287
178.270–5 (d) amended 66284
178.337–3 (c) revised 27875
(c) introductory text corrected 46354
178.337–6 (a) amended 27876
178.338–3 (c) revised 27876
(c) introductory text corrected 46354
178.345–2 (a)(1) amended 27876
178.345–3 (a)(1) and (g)(2) amended; (c) revised 27876
178.345–7 (a)(2) revised; (c) and (d) introductory text amended 27876
(a)(2) corrected 46354
178.345–8 (d)(3) amended 27877
178.345–9 (a) revised 27877
178.345–10 (b)(3) revised 27877
178.345–11 Revised 27877
178.346–1 (d)(8) amended 27877
178.347–1 (d)(8) amended 27877
178.348–1 (e)(2)(viii) amended 27877
178.352–6 (a)(3) amended 66287
178.358–5 (b)(5) amended 66287
178.360–4 Redesignated from 178.34–4 66284
178.362–6 (b) amended 66287
178.503 (a)(9) removed; (a)(10) redesignated as (9); (a) introductory text and (7) revised; new (a)(10) added; (a)(1), (2), (5)(i), (8), (9) and (b) amended 66284
178.504 (b)(4) and (5) amended 66284
178.505 (b)(3) and (4) amended 66284
178.506 (b)(3) and (4) amended 66285
178.520 (b)(3) amended 66285
178.521 (b)(2) amended 66285
178.601 (g)(2)(vii) removed; (g)(2)(viii) redesignated as (vii) and (3) redesignated as (7); newly redesignated (g)(2)(vii) revised; (c)(4) and (g)(3) through (6) added; (c)(4)(iii), (iv), (e), (g) introductory text, (2)(vi), (h) and (k) introductory text amended 66285
178.602 (a) revised; (b), (d)(1), (2) and (e) amended 66286
178.603 (a) introductory text and (f)(6) revised; (b), (c), (e)(1)(iii), (2)(i)(C) and (2)(ii)(B) amended 66286

49 CFR—Continued

56 FR Page

Chapter I—Continued

178.604 (b)(2), (c)(1) and (d) amended 66286
178.605 (a) and (b) amended 66286
178.606 (a), (b), (c)(2)(ii) and (d) amended 66286
178.608 (b0(2) and (c) amended 66286
178 Appendix B amended 66287
179.101–1 (a) table amended 66287
179.105–7 (c) introductory text amended 66287
180.2 (b)(2) revised 27877
180.405 (g)(3) and (h) introductory text amended 27877
(b), (h)(1) and (2) amended; (c)(1) introductory text, (2)(vii), (g)(1) and (2) revised 27878
180.407 (a)(2), (g)(1)(v) and (d)(1) introductory text amended; (f)(1), (2), (g) heading, (g)(1)(iv) table and (h)(1) revised; (g) introductory text added 27878
180.409 (b)(2) amended 66287
180.413 (c) and (d)(2)(iii) amended; (d)(1)(i), (ii), (iii) and (3) revised 27879
180.415 Revised 27879
(b) amended 66287
180.417 (a)(2) amended 27879

1992

49 CFR

57 FR Page

Chapter I

101 Removed 60728
101.1—101.7 (Subchapter A) Removed 60728
107 Authority citation revised 20428, 30630, 37902
Interpretation 48739
107.201 (a) and (c) revised 20428
107.202 (d) added 20428
107.203 (a) revised 20428
107.205 (a) revised 20428
107.209 (c) revised 20428
107.211 Revised 20428
107.215 (a) introductory text revised 20428
107.217 (a) and (c) revised 20429
107.221 (c) revised 20429
107.223 Removed; new 107.223 redesignated from 107.225 and revised 20429
107.225 Redesignated as 107.223 and revised 20429

49 CFR—Continued

57 FR Page

Chapter I—Continued

107.315 (c) revised; (d) added.....45453
107.503 (b)(1) and (c) amended 365
107.601—107.620 (Subpart G) Added 30630
Clarification.....33416
107.601 Introductory text amended; (d) and (e) revised 37902
107.620 (b) revised.....37902
110 Added; eff. 10–19–92 43067
171 Authority citation revised.....37902
Interpretation 48739
171.1 (a)(3)(iv) added.....52934
171.2 (a) and (b) revised.....30631
Clarification.....33416
(b) amended 37902
171.4 Added 52934
171.6 (b)(2) table amended (OMB numbers) 1877
171.7 (a)(3) table amended; interim 60739
171.8 Amended ...20952, 45453, 52935, 59309
Corrected.....47513
171.11 (d)(13) added 52935
171.12 (b)(7) revised 45453
171.12a (b) introductory text revised.....45453
(b)(15) added.....52935
171.14 (b)(2) revised; (b)(3) through (5) redesignated as (b)(4) through (6); new (b)(3) added.....45443
Heading, (a), (b) introductory text and (c)(2) introductory text revised 45454
(b)(2) corrected 47412
171.15 (a)(4) redesignated as (a)(5); new (a)(4) added 52935
172 Heading revised 20952
Interpretation 48739
172.101 Table amended 1878, 45454–45457
Appendix amended.....45458
Table amended.....45454—45457, 59309, 59310
Appendix amended.....45458
Table corrected 47513
Table amended; appendix redesignated as appendix A and amended; appendix B added 52935
Table corrected; appendix A correctly designated.....54141
172.102 (c)(1), (3) and (7)(ii) amended 45458

49 CFR—Continued

57 FR Page

Chapter I—Continued

(c)(7)(ii) corrected.....47513
(c)(5) amended 52938
(c)(3) amended 59310
172.200 (b) introductory text amended.....52938
172.202 (d) amended 52938
172.203 (m)(1) amended 45458
(c)(1)(i) amended; (l) added 52938
172.312 (a)(2) amended 45458
172.313 (a) correctly revised.....46624
172.322 Added 52938
172.324 (a)(1) amended 52939
172.330 (a) heading revised.....45458
172.405 (a) introductory text amended.....45458
172.422 (a) revised.....45458
172.504 (c) introductory text, (f)(1) and (4) revised; (f)(9) and (10) added.....45460
(f)(9) amended.....59310
172.505 (a) revised.....45460
172.510 (c) amended; (e) revised.....45460
172.519 (b)(3) amended 45460
172.526 (a)(4) amended 45460
172.560 (b) revised.....45460
172.700—172.704 (Subpart H) Added 20952
172.702 Heading revised; (d) correctly added.....22182
173 Interpretation 48739
173.1 (b) revised.....20953
173.2 Amended 45460
173.12 (d)(1) and (2) amended; (d)(3) added 52939
173.22 (a)(4) amended.....45460
173.23 (c) amended.....45460
173.24a (c)(1)(iii) amended 45460
173.28 (e) added.....45460
173.29 (b)(3) amended.....52939
173.31 (c) Table 1 amended 45460
173.32 (a)(1), (3), (5) and (c) amended 45460
173.32c (r) added 45460
(f) amended.....45461
173.33 (c)(1)(iii), (5) and (e) amended 45461
173.193 (d) amended 45463
173.115 (b)(1) amended 45461
173.120 (b)(1) and (2) amended.....45461
173.124 (a)(3)(ii) revised 45461
173.133 (a)(2)(ii) introductory text republished; (a)(2)(ii) Figure 1 revised 45461
(a)(1) table and (2)(i) table amended 45463

49 CFR—Continued

57 FR Page

Chapter I—Continued

173.140 Revised 45463
(b) revised 52939
173.150 (a), (f) introductory text and (3)(vii) amended 45463
(c), (f)(2), (3) and (4) amended 52940
173.151 (c) amended 52940
173.152 (c) amended 52940
173.153 (c)(3) amended 52940
173.154 (d) revised 45463
(c) and (d) amended 52940
173.155 (c) amended 52940
173.156 (b) amended 45463
173.159 (b)(3) through (6) added; (c) introductory text revised 45463
173.166 Added 1878
173.193 (d) amended 45463
173.211 (c) amended 45463
173.225 (e)(2) amended; (e)(3) introductory text, (i), (ii), (iii), (v) and (iv) redesignated as (e)(3)(i) introductory text, (A), (B), (C), (ii) and (4) 45463
173.227 (b) introductory text amended 45463
173.244 Heading revised 45463
173.302 (a)(5)(iii) amended; (h) revised 45463
173.304 (f)(1) amended; (g) revised 45463
173.314 (c) introductory text revised 45463
(c) table amended 45464
(c) table corrected 47513
173.315 (a) table, (d) and (i)(12) amended 45464
173.336 Heading and introductory text revised 45464
173.421–2 (b)(1)(i) and (2)(i) amended 52940
173.425 (b)(8) amended 52940
174 Interpretation 48739
174.7 Revised 20953
174.25 (a)(2) table amended 45464
(b)(5) added 52940
174.55 (c) amended 45464
174.61 (c) amended 45464
174.81 (d) table and (e)(5) amended; (f) table revised 45464
(d) table amended 59310
174.82 (a) amended 45464
174.85 (b) amended 45464
175 Interpretation 48739
175.20 Revised 20953
176 Interpretation 48739

49 CFR—Continued

57 FR Page

Chapter I—Continued

176.13 Revised 20954
176.70 Added 52940
176.83 (c)(2)(i)(A) and (B) amended 45465
176.600 (d) amended 45465
177 Authority citation revised 45465
Interpretation 48739
177.800 Revised 20954
177.805 (a) designation removed 45465
177.816 Revised 20954
177.825 (d) revised 20954
177.848 (f) table revised; (d) table and (e)(5) amended 45465
(f) table corrected 47513
(d) table amended 59310
177 Appendix B corrected 47513
178.270–5 (a), (c) and (d) amended 45465
178.337–1 (b) amended 45465
178.337–11 (a)(4)(i)(B) amended 45465
178.345–2 (a)(2) amended 45465
178.345–11 (a) and (b)(1)(iii) amended; (b)(2) and (c) revised 45465
178.507 (a) amended 45465
178.601 (h) amended 45465
178.603 (a) introductory text and table amended 45465
178.606 (c)(1) amended; (d) removed 45465
178 Appendix B amended 45466
Appendix B; technical correction 47513
179.101–1 (a) table amended 45466
179.200–18 (b)(4) removed 45466
180.403 Amended 45466
180.405 (g)(2) amended 45466
180.407 (d)(2)(vii) removed; (d)(2)(viii) amended 45466
180.409 (b) introductory text revised 45466
180.413 (a) introductory text amended 365
(d)(2)(v) correctly revised 45466
180.415 (b) and (c) amended 45466

1993

49 CFR

58 FR Page

Chapter I

101 (Subchapter A) Heading added 33304

49 CFR—Continued

58 FR Page

Chapter I—Continued
106—110 (Subchapter B) Heading transferred to 130.1 through 130.33; new Subchapter A heading added 33304
106 Authority citation revised..... 33304
Transferred to Subchapter A 33304
Meeting 33918
106 Appendix A amended 33304
107 Filing requirements 10985
Authority citation revised 33304, 51527
Transferred to Subchapter A 33304
Meeting 33918
Clarification 53626
107.117 (a) amended..... 51527
107.101—107.123 (Subpart B) Appendix B amended..... 51527
107.202 (d) amended..... 51527
107.315 (c) and (d) amended 51527
107.327 (a)(1)(iii) amended 51527
107.331 (d) amended 50500
107.502 (f)(2) amended; interim 46873
107.601 (e) revised 12545
107.606 (d) amended..... 51527
107.616 (b) amended 12545
107.620 (a)(1) amended; (a)(2) removed; (a)(3) redesignated as (a)(2)..... 12545
110 Transferred to Subchapter A 33304
Meeting 33918
130.1—130.33 (Subchapter B) Heading transferred from 106–110 and revised 33304
Meeting 33918
171 Authority citation revised 6870, 33305, 51527
Filing requirements 10985
Meeting 33918
Policy statement..... 47650
Clarification 53626
171.1 (a)(3)(v) added 6870
Regulation at 58 FR 6870 comment period extended 21260
(a)(3)(v) removed 33305
171.2 (c) and (d)(3) amended 33305
171.5 Added 6870
Regulation at 58 FR 6870 comment period extended 21260
Removed..... 33305
171.6 (b)(2) table amended 51527

49 CFR—Continued

58 FR Page

Chapter I—Continued
171.7 Amended 50230
(a)(3) table amended 51528
171.8 Amended.... 6870, 33305, 50230, 50500, 51528
Regulation at 58 FR 6870 comment period extended 21260
171.9 (b)(4) amended..... 51528
171.11 (d)(14) added..... 6870
Regulation at 58 FR 6870 comment period extended 21260
(d)(14) removed 33305
171.12 Regulation at 58 FR 6870 comment period extended 21260
(b)(17) added 6870
(b)(17) removed 33305
171.12a Regulation at 58 FR 6871 comment period extended 21260
(b)(16) added 6871
(b)(16) removed 33305
171.14 (b)(3) removed; (b)(5) and (6) redesignated as (b)(6) and (7); new (b)(5) added 12183
(b)(5) removed; (b)(6)(iii) added 66303
171.15 Regulation at 58 FR 6871 comment period extended 21260
Note revised..... 6871, 33305
Authority citation removed 51528
172 Authority citation revised 6871, 33305, 50501, 51528
Meeting 33918
Policy statement..... 47650
172.101 Table amended..... 3348, 33305, 50232, 50235, 50493, 50501, 51528, 51529
Table corrected 8821
(c)(12)(i) revised; (c)(12)(ii) amended 50231
Appendixes A and B amended 51531
172.102 (c)(1), (2), (3) and (7)(ii) amended..... 50235
(c)(1), (3) and (5) amended 51531
172.202 (a)(2) amended..... 51531
172.203 (m)(1) amended 45458
(g)(3) amended..... 3348
(o) added 6871
Regulation at 58 FR 6871 comment period extended 21260
(o) removed..... 33305
(k) introductory text, (3), (4)(iii) and (iv) amended 51531
172.325 Revised 3348
172.400a (a)(1) introductory text amended..... 50501
(a)(6) amended 51531

49 CFR—Continued

58 FR Page

Chapter I—Continued

172.401 (a) introductory text revised; (d) added 50501
172.406 (a)(2) and (e)(1) amended 51531
172.525 (b) amended..... 51531
172.526 (b) amended..... 51531
172.556 (b) amended..... 51531
172.704 (a)(1), (2), (c)(1)(i) and (ii) revised 5851
173 Authority citation revised 6871, 51531
Clarification 53626
Meeting 33918
Policy statement 47650
173.2 Table amended 51531
173.3 (c) introductory text amended 51531
173.4 (a) introductory text, (2) introductory text text and (11) amended 51531
173.7 (b) revised 50501
(a) introductory text amended 51532
173.10 (d) and (e) amended 51532
173.21 (b) and (j) amended 51532
173.22 (a)(2)(iv) amended 33305
(a)(3)(i) amended..... 51532
173.24a (b)(4)(i) amended 51532
173.25 (a) introductory text amended 51532
173.31 (b)(4) added 50501
(c)(9) amended 51532
173.32 (e)(5) added..... 50501
173.33 (c)(4) and (d)(1) revised 12905
173.34 (e) table amended; (e)(15)(i) revised; (e)(18) added 50501
(d)(3) revised 50235
(e)(16) introductory text and (v) amended 51532
173.54 (l) added 50236
173.56 (b)(2) introductory text and (i) amended..... 51532
173.57 (a) introductory text amended 51532
173.62 (c) table amended 50502
(b) table amended 50236
(b) amended 51532
173.63 (a) introductory text amended; (b) removed 50236
173.115 (a) amended 50236
(a) introductory text and (2) amended 51532
173.124 (a)(1)(ii)(A) amended 33305
(b)(2) amended 51532
173.127 (a) amended..... 51532

49 CFR—Continued

58 FR Page

Chapter I—Continued

173.128 (a) introductory text amended..... 51532
173.132 (b)(1) amended..... 51532
173.133 (b)(1)(ii) amended 51532
173.136 (a) introductory text amended..... 51532
173.140 (b) revised 6871, 33305
Regulation at 58 FR 6871 comment period extended 21260
173.150 (a), (f) introductory text and (3)(vii) amended..... 45463
(f)(3)(viii) and (4) introductory text revised..... 6871, 33305
Regulation at 58 FR 6871 comment period extended 21260
173.151 (b)(2) amended..... 51532
173.155 (c) amended 52940
(d) added 6871
Regulation at 58 FR 6871 comment period extended 21260
(d) removed..... 33305
173.159 (d)(1) and (2) redesignated as (d)(3)(i) and (ii); (d) introductory text revised; new (d)(1), (2) and (3) introductory text added..... 50502
(g)(1) amended 51532
173.163 Amended 50236
173.185 (l) added..... 50502
(a), (g)(1), (i) introductory text and (j)(1) revised; (m) added 50236
173.225 (b) table amended 51532
173.226 (b) introductory text, (4)(i)(A), (B), (ii)(B) and (5) amended; (b)(4)(i)(C), (D), (ii)(C) and (D) added 50236
173.227 (b)(3)(i)(D), (ii)(C), (4) and (c) amended 50236
173.247 Revised 3349
173.247 (g)(1)(ii) and (iii)(B) amended 51532
173.301 (g)(5) amended..... 51532
173.304 (a)(2) table amended; (h) added..... 50502
(d)(3)(i) amended..... 51532
173.306 (a)(3)(i) and (b)(1) introductory text amended; (h)(3) revised 50236
(c) removed..... 50503
(i) introductory text amended 51532
173.309 Added 50503
173.314 (g)(4) added 50503
(c) table amended 50236

49 CFR—Continued

58 FR Page

Chapter I—Continued

173.315 (a) table amended 50237, 51532
173.318 (g) introductory text amended.....50503
(b)(3)(ii) amended 51532
173.323 (b)(5) amended 50237
(f) amended.....51532
173.417 (b)(2)(ii) Table 5 amended 51533
173.423 Table 7 amended 50503
173.433 (b)(4) amended.....51533
173 Appendixes B, D and E amended 51533
174 Authority citation revised 6871, 33305, 51533
Meeting 33918
Policy statement.....47650
174.1 Amended.....51533
174.25 (b)(1)(i) amended; (b)(6) added 6871
Regulation at 58 FR 6871 comment period extended 21260
(b)(6) removed.....33305
(a)(2)(ii) amended 51533
174.55 (c) amended 51533
174.81 (d) table amended; (e)(3) revised.....50237
174.82 (a) amended 51533
174.83 (b) revised; (c) redesignated as (f); new (c), (d) and (e) added.....50237
174.290 Heading amended.....51533
174.430 Amended.....51533
174.700 (c) table amended 51533
175 Authority citation revised.....51533
175.10 (a)(16) amended; (a)(23) and (24) added.....50493
(a)(7), (12) introductory text, (12)(v), (19) and (20) revised; (a)(12)(ii) amended; (a)(12)(vi) and (25) added 50504
175.25 Heading and (a) introductory text revised 50505
175.26 Added 50505
175.78 (a) introductory text revised.....50505
175.320 (a) table and (c) introductory text amended 51533
175.700 (b) amended 50505
175.701 (b)(1) amended; (b)(2) revised; (b)(3) added 50494
175.702 (b)(2)(i) revised 50494
176 Meeting 33918
Authority citation revised 51533
176.5 (b) introductory text amended 51533

49 CFR—Continued

58 FR Page

Chapter I—Continued

176.70 (a) amended 6872, 33306
Regulation at 58 FR 6872 comment period extended 21260
176.83 (f)(4) amended 51533
176.100 Amended.....51533
176.118 (b) amended.....51533
176.410 (c)(2) amended 51533
177 Authority citation revised.....51533
177.33 (c)(4) and (d)(1) amended 12905
177.804 Revised 50505
177.806 (b) revised.....50505
177.816 (a) and (4) amended; (c) revised; (d) added 5852
177.825 Revised 51533
177.834 (j) amended 51533
177.838 (g) amended.....51533
177.848 (d) table amended; (e)(3) revised 50237
177.857 (d) amended.....51533
177.858 (b)(1) amended.....51533
178 Meeting 33918
Authority citation revised 51533
Clarification.....53626
178.33–2 (b) amended 50237
178.33a–2 (b) amended.....50237
178.39–9 (a) amended 51533
178.39–14 (b) amended 51534
178.46–12 (e) redesignated as (c).....51534
178.53–9 (b) amended 51534
178.55–20 (a) introductory text amended.....51534
178.56–3 Amended.....51534
178.56–11 (a) amended 51534
178.60–24 (a) amended 51534
178.61–8 (c)(2) amended.....51534
178.61–20 (b) amended 51534
178.251–2 (a) revised.....50507
178.270–5 (d) amended 51534
178.270–11 (d)(1) amended.....51534
178.320 Amended 33306
178.337–1 (f) amended.....51534
178.337–6 (a) amended 12905
178.337–16 (b)(2) amended.....51534
178.337–18 (a) amended.....33306
178.338–10 (c) amended.....51534
178.338–19 (c) amended.....51534
178.345–14 (b)(11) amended 51534
178.345–15 (a) amended.....33306
178.352–2 (a) amended 51534
178.352–6 (a)(2) amended 51534
178.362–2 (e)(5) amended 51534
178.516 (b)(3)(i) amended.....51534
178.518 (a)(2) amended 51534

49 CFR—Continued

58 FR Page

Chapter I—Continued

178.600 Amended 51534
178.603 (a) table amended 51534
178.605 (d)(1) amended 51534
179 Policy statement 47650
Authority citation revised 51534
179.100–7 (c) redesignated as (d); new (c) added 50237
179.100–10 (c) added..... 50238
179.101–1 (a) table amended 51534
179.105–4 (a) introductory text amended..... 51534
179.203–1 (a) amended 51534
179.400—179.500–18 (Subpart F) Corrected 51534
180 Meeting 33918
Authority citation revised 51534
180.3 (a), (b)(3) and (5) amended 33306
180.405 (b) and (c)(1) table amended 12905
(f)(2) introductory text amended 51534
180.407 (f)(1)(i)(C) amended..... 51534
180.413 (d)(1)(i), (ii) and (iii) amended..... 12905
(a)(1) and (2) amended 33306
180.417 (a)(3) amended 12905

1994

49 CFR

59 FR Page

Chapter I

106 Authority citation revised..... 49130
106.3 (b) revised; (c) added; authority citation removed 49130
106.17 Authority citation removed 49130
106 Appendix A removed 49130
107 Filing requirements..... 22132
Authority citation revised 49130
107.3 Amended 49130
107.13 Authority citation removed 49130
107.101 Amended 49130
107.103 (a) and (b)(10) amended 49130
107.109 Authority citation removed 49130
107.111 (b)(3) amended 49130
107.119 Authority citation removed 49130
107.201—107.227 (Subpart C) Authority citation removed 49131

49 CFR—Continued

59 FR Page

Chapter I—Continued

107.201 (a)(1), (2) and (c) amended 49130
107.202 (a), (b) and (c) revised..... 49130
107.203 (a) revised; (b)(3) and (c) amended..... 49131
107.209 (b) and (e) amended 49131
107.215 (a) introductory text, (1), (b)(4), (5) and (6) amended 49131
107.219 (c)(1) and (2) amended..... 49131
107.221 (b) introductory text and (e) amended 49131
107.299—107.339 (Subpart D) Authority citation removed 49131
107.299 Amended 49131
107.301 Amended 49131
107.305 (a) and (b) amended 49131
107.307 (a) amended 49131
107.309 (a) amended 49131
107.311 (a) and (b)(1) amended 49131
107.329 (a) and (b) amended 49131
107.333 Amended 49131
107.335 Amended 49131
107.337 Amended 49131
107.339 Amended 49131
107.401—107.405 (Subpart E) Authority citation removed 49131
107.403 (c) amended 49131
107.502 (f)(1) corrected; CFR correction 30530
107.503 (c) amended 49131
107.601 (e) amended 32932
107.606 (f) amended..... 32932
107.608 (a) revised..... 32932
107.620 (c) redesignated as (d); new (c) added 32932
110 Authority citation revised..... 49131
110.20 Amended..... 49132
110.30 (a) introductory text revised; (c) introductory text amended..... 49132
110.60 (a) introductory text amended..... 49132
110.120 Amended 49132
130 Authority citation revised..... 49132
171 Filing requirements..... 22132
Authority citation revised 48763, 49133
171.1 (c) amended; authority citation removed 49132
171.2 (f)(1), (2), (g)(1) and (2) amended; authority citation removed 49132

49 CFR—Continued

59 FR Page

Chapter I—Continued

171.3 (b)(3)(iii) note revised 49132
171.7 (a)(3) table amended.... 28490, 38052, 49132
(a)(3) table amended 55172, 64744, 67405
171.8 Amended 38052
Amended; authority citation removed 49132
Amended 67406
171.11 (d)(5) amended 67406
(d)(6)(i) amended; authority citation removed 49132
171.12 (b) introductory text amended 67406
(b)(5) revised 38052
(d)(1) amended 49132
171.14 (b)(6)(iii) removed; (b)(6) and (7) redesignated as (b)(5) and (8); new (b)(6) and (7) added 48763
Regulation at 59 FR 48763 eff. date confirmed as 9–22–94 53116
Revised 67406
171.16 Authority citation removed 49132
171.18 Authority citation removed 49132
172 Authority citation revised 48549
172.101 Table amended 28491, 38052
Appendix A amended 31823, 31824
Table corrected 35411, 37537
Regulation at 59 FR 31823 eff. date for lead sulfide extended to 11–29–94 44938
(c)(8) introductory text, (ii), (d)(4), (g) and table amended 49132
Appendix amended 49133
(c)(3), (13) and (k)(1) through (5) revised; (g) amended 67407
(c)(11) introductory text and (12)(iii) amended 67408
Table revised 67409
appendix B amended 67485
172.102 (c)(1) and (3) introductory text amended 28493
(c)(3) amended 38064, 48549
(c)(1), (3) and (7)(ii) amended 49133
(c)(1), (2) and (3) amended 67485
172.201 Authority citation removed 48549
172.202 Authority citation removed 48549

49 CFR—Continued

59 FR Page

Chapter I—Continued

172.203 Authority citation removed 48549
(e)(2), (h)(2)(i), (k) introductory text and (3) amended 49133
172.203 (k)(3) amended; (l)(3) and (o) added 67486
(m)(1) amended 67487
172.204 Authority citation removed 48549
(a)(2) amended 67487
172.205 Authority citation removed 48549
172.310 Authority citation removed 48549
172.320 (b) amended 67488
172.322 (b) and (e)(2) revised 38064
172.325 (c) amended 67489
172.332 Authority citation removed 48549
172.334 (b)(3) amended 49133
172.400a (c) and (d) added 67490
172.401 Authority citation removed 48549
172.402 (a)(1) revised; (a)(2) amended; (f) and (g) added 67490
172.403 Authority citation removed 48549
172.411 (d) amended 67490
172.416 (b) amended 67490
172.420 (a) illustration corrected; CFR correction 30530
172.422 (a) illustration corrected; CFR correction 30530
172.430 (b) amended 67490
172.505 (a) amended 49133
172.510 Authority citation removed 48549
172.512 Authority citation removed 48549
172.514 (c)(3) amended; (c)(4) added 38064
172.521 (a) illustration corrected; CFR correction 30530
172.527 Authority citation removed 48549
172.540 (b) amended 67490
172.546 (a) illustration corrected; CFR correction 30530
172.547 (b) amended 67490
172.554 (b) amended 67490
172.556 (a) illustration corrected; CFR correction 30530
172.600 (c)(2) amended 49133
172.604 (a)(3)(i) amended 49133

49 CFR—Continued

59 FR Page

Chapter I—Continued

172 Appendix A authority citation removed 48549
Appendix A amended 49133
173 Authority citation revised 49133
173.1 Authority citation removed 49133
173.2a (b) table amended 67490
173.7 Authority citation removed 49133
173.9 (e) added 67490
173.10 Authority citation removed 49133
173.11 (b)(4) amended; authority citation removed 49133
173.12 (d)(1) and (2) amended; (d)(3) removed 49133
173.21 (f)(2) amended 67490
173.22 Authority citation removed 49133
(a)(2)(iii) and (iv) redesignated as (a)(2)(iv) and (v); new (a)(2)(iii) added; (a)(3)(i) and (4) revised 67491
173.23 Authority citation removed 49133
173.24 (d) amended 38064
(c)(1) and (e)(4)(ii) amended; (d) revised 67491
173.25 (a) introductory text revised; (b) added 67491
173.27 (f) Table 2 and (g)(1) amended 49133
173.28 (b)(4) revised; (b)(7) and (c)(4) added 67491
(c)(1)(i) and (3) amended 67492
173.31 Authority citation removed 49133
173.32 (d) and (e)(1)(ii) revised 38064
(g) and (q) introductory text amended 49133
173.33 (c)(4) and (d)(1) amended 1786
Regulation at 59 FR 1786 effective date confirmed 12861
(c)(1)(iii) and (iv) amended 49133
(d)(3) amended; (h) added 55172
(c)(5) amended 67492
173.34 (e)(15)(i) revised; (v) and (17)(ii) amended 28493
(e)(18)(i) amended 49133
173.35 Added 38064
173.52 (b) Table 1 amended 67492
173.59 Amended 67492

49 CFR—Continued

59 FR Page

Chapter I—Continued

173.60 (b)(15) added 67492
173.62 (a), (c) table and (d) revised; (b) table amended 67492
(e) amended 67506
173.115—173.156 (Subpart D) Heading amended 49133
173.115 Heading and (b) introductory text revised 67506
173.116 (a) table amended 49133
173.120 (a) revised; (b)(2) amended 67506
(c)(1)(i)(A), (B) and (ii)(A) amended 67507
173.121 (b)(1)(ii) amended; (b)(1)(iv) table and (2)(i) revised 67507
173.124 Heading and (a)(2) revised 67507
173.128 (a) introductory text, (c)(2) and (3) amended; (b)(7) revised; (c)(4) removed; (d) redesignated as (e); new (d) added 67508
173.133 (b)(1)(iv) table amended 49133
173.136 (a) revised 67508
173.137 Introductory text amended; (a), (b) and (c) revised 67508
173.150 Heading and (d) revised; (a), (b) introductory text and (3) amended 67508
173.152 (b)(3) revised 67508
173.158 (f)(3) added 67509
173.164 (b), (c) and (d) redesignated as (c), (d) and (e); new (c) introductory text revised; (a)(1), (2) and new (c)(1) amended; new (b) added 67509
173.166 Heading, (b) and (d)(1) revised; (a), (c), (d)(2) and (f) amended 67509
173.171 (a) amended 67509
173.173 Heading and (b) introductory text revised 67509
173.185 Revised 67509
173.189 Added 67511
173.196 (f) amended 67511
173.201 (b) and (c) amended 67518
173.202 (b) and (c) amended 67518
173.203 (b) and (c) amended 67518
173.211 (c) amended 67511
(b) and (c) amended 67518
173.212 (c) amended 67511
(b) and (c) amended 67518

49 CFR—Continued

59 FR Page

Chapter I—Continued
173.213 (c) amended 67511
(b) and (c) amended 67518
173.217 (a) amended 49133
173.224 Revised 67511
173.225 (b) table amended 28493
(b) table amended; (e)(5) added 38065
(e)(2) amended 55172
(a) amended; (b) table and (e)(3)(ii) revised; (c)(5) added 67513
173.226 (b)(4)(ii)(A) amended 49134
173.226 (c)(1) amended 67517
173.227 Heading amended 49134
173.230 (d) amended 49134
173.240 (d) added 38067
173.241 (d) added 38067
173.242 (d) added 38067
173.243 Heading revised; (d) and (e) added 38068
(b)(2) amended 49134
173.247 (g)(1)(iii)(B) revised 28493
173.301 (g) introductory text amended 49134
173.302 (h) amended 28493
Authority citation removed 49133
173.304 (g) amended 28493
Authority citation removed 49133
(a)(2) table amended 67517
173.306 (a)(3) introductory text amended 28493
Authority citation removed 49133
(a)(3)(v) revised; (a)(4) added 67517
173.309 (a)(1), (3)(iii), (4)(ii) and (b)(2) amended 49134
173.315 Authority citation removed 49133
(a) table amended 49134
(o)(1) revised; (o)(2) amended 55172
173.316 Authority citation removed 49133
173.318 Authority citation removed 49133
(b)(1)(ii)(A), (2)(i)(A), (B), (6)(ii) and (g)(2)(i) amended 49134
173.319 Authority citation removed 49133
173.401—173.478 (Subpart I) Authority citation removed 49134
173.420 (a)(2)(i) and (b) amended 28493
173.425 Authority citation removed 49133
173 Appendixes A and F amended 49134

49 CFR—Continued

59 FR Page

Chapter I—Continued
Appendix A removed; Appendixes E and F amended; appendix H added 67517
174 Authority citation revised 48549
174.25 (c) amended 28493
Authority citation removed 48549
174.61 Heading revised; (a) amended; (c) removed 64744
174.63 (b) amended 49134
Revised 64744
174.67 Authority citation removed 48549
174.83 (b) introductory text revised 48549
174.100 (b) amended 49134
174.204 Authority citation removed 48549
175 Authority citation revised 49134
175.3 Authority citation removed 49134
175.10 Authority citation removed 49134
(a)(4) introductory text and (13) revised; (a)(12) introductory text amended; (a)(17) removed; (a)(26) added 67518
175.20 Authority citation removed 49134
175.30 Authority citation removed 49134
175.33 Authority citation removed 49134
(a)(1) introductory text, (6) and (7) amended 67518
175.75 Authority citation removed 49134
175.78 Authority citation removed 49134
175.79 Authority citation removed 49134
175.81 Authority citation removed 49134
175.85 Authority citation removed 49134
175.88 Authority citation removed 49134
175.90 Authority citation removed 49134
175.305 Authority citation removed 49134
175.320 (a) table amended; authority citation removed 49134

49 CFR—Continued

59 FR Page

Chapter I—Continued

175.630 Authority citation removed 49134
175.700 (b) amended 49134
175.701 Authority citation removed 49134
175.702 Authority citation removed 49134
175.703 Authority citation removed 49134
175.705 Authority citation removed 49134
176 Authority citation revised 49134
176.11 Authority citation removed 49134
176.13 (c) amended 49134
176.27 (c) added 67518
176.30 Authority citation removed 49134
176.39 Authority citation removed 49134
176.76 Authority citation removed 49134
(i) added 67519
176.83 (c)(2)(ii) illustration and (iii) illustration corrected; CFR correction 30530
(c)(2)(iv) illustration and (v) illustration corrected; CFR correction 30531
177.841 (e)(3) amended 67519
176.95—176.99 (Subpart F) Authority citation removed 49134
176.415 (b)(2) amended 49134
176.600 (d) amended 49134
176.700 Authority citation removed 49134
177 Authority citation revised 49134
177.818 Authority citation removed 49134
177.834 Authority citation removed 49134
177.835 Authority citation removed 49134
177.838 (g) and (h) amended 49134
177.839 (d) introductory text amended 49134
177.840 (d) amended; authority citation removed 49134
177.841 (d) introductory text amended 49134
177.842 Authority citation removed 49134

49 CFR—Continued

59 FR Page

Chapter I—Continued

177.843 Authority citation removed 49134
177.848 (e)(6) amended 49134
177.860 (a) introductory text and (b) amended 49135
178 Authority citation revised 49135
178.2 (a) revised; (e) added 67519
178.3 (a) introductory text and (b) revised; (a)(2) and (4) amended; (a)(5) added 67519
178.36–3 Authority citation removed 49135
178.37–3 Authority citation removed 49135
178.37–5 Authority citation removed 49135
178.38–3 Authority citation removed 49135
178.39–3 Authority citation removed 49135
178.42–3 Authority citation removed 49135
178.44–3 Authority citation removed 49135
178.45–3 Authority citation removed 49135
178.47–3 Authority citation removed 49135
178.50–3 Authority citation removed 49135
178.51–3 Authority citation removed 49135
178.53–5 Authority citation removed 49135
178.55–3 Authority citation removed 49135
178.56–3 Authority citation removed 49135
178.57–3 Authority citation removed 49135
178.58–3 Authority citation removed 49135
178.58–5 Authority citation removed 49135
178.59–3 Authority citation removed 49135
178.60–3 Authority citation removed 49135
178.61–3 Authority citation removed 49135
178.65–3 Authority citation removed 49135
178.68–3 Authority citation removed 49135

49 CFR—Continued

59 FR Page

Chapter I—Continued

178.245–5 (b) amended 49135
178.251 Removed 38068
178.251–1 Removed 38068
178.251–2 Removed 38068
178.251–3 Removed 38068
178.251–4 Removed 38068
178.251–5 Removed 38068
178.251–6 Removed 38068
178.251–7 Removed 38068
178.252 Removed 38068
178.252–1 Removed 38068
178.252–2 Removed 38068
178.252–3 Removed 38068
178.253 Removed 38068
178.253–1 Removed 38068
178.253–2 Removed 38068
178.253–3 Removed 38068
178.253–4 Removed 38068
178.253–5 Removed 38068
178.255–5 (b) amended 49135
178.255–12 (a) amended 49135
178.270–9 Amended 49135
178.270–11 (b)(1) introductory text and (d)(2) amended 49135
178.271–1 (a) amended 49135
178.272–1 (a) amended 49135
178.337–1 (b) and (d) amended 49135
(a)(3), (e)(1) and (2) amended 55172
178.337–2 (a)(1) and (c) amended 49135
178.337–3 (c)(3)(i) amended 49135
178.337–9 (b)(7)(i) removed; (b)(7)(ii) and (iii) redesignated as (b)(7)(i) and (ii) 55173
178.337–11 (a)(2)(i) amended 49135
(a)(2) introductory text revised 55173
178.337–18 (a)(3) amended 49135
178.338–1 (c)(1) amended 49135
178.338–9 (c)(2) revised 55173
178.338–11 (c) introductory text amended 55173
178.345–1 (c) amended; (i)(2) revised 55173
178.345–3 (e) and (g) introductory text amended 49135
(b) and (c) revised 55173
(d) removed; (e), (f) and (g) redesignated as (d), (e) and (f); (a)(1), (3) and new (d) amended 55174
178.345–5 (f) added 55175
178.345–6 (a) and (b) amended 55175
178.345–7 (a)(2) amended 49135

49 CFR—Continued

59 FR Page

Chapter I—Continued

178.345–8 (a)(3), (b) introductory text, (1), (c) introductory text, (1) and (d)(3) revised; (e) added 55175
178.345–10 (b)(3)(i) and (ii) revised 55175
178.345–13 (c) heading added 55176
178.345–14 (b)(6), (15), (c)(3), (6) and (7) amended 49135
(d) amended 55176
178.345–15 (b)(2) amended; (e) added 55176
178.346–1 (d)(9) and (10) added 55176
178.346–2 (a) designation removed; amended 55176
178.346–10 (b)(1) and (2) amended; (b)(3) added; (c)(1) and (d)(1) revised 55176
178.346–13 (c) revised 55176
178.347–2 (a) and Tables I and II amended 49135
178.348–10 (d)(3) amended 49135
178.350–3 (b) amended 49135
178.502 (a) introductory text, (1) introductory text and (3) amended 67519
178.503 (a)(9), (d)(2)(ii) illustration and (3) illustration revised 28493
(d) redesignated as (e); (a) introductory text, (9), (10), (c) and new (e) illustration revised; (a)(11) and new (d) added 67519
(e)(2) amended 67521
178.505 (b)(1) amended 28494
178.506 (b)(1) amended 28494
178.508 (b)(2) amended 67521
178.509 (b)(4) amended 28494
178.511 (b)(1) amended 28494
178.512 (a)(1), (2) and (b)(2) revised; (a)(3) and (4) removed 67521
178.513 (b)(2) and (3) redesignated as (b)(3) and (4); new (b)(2) added 67521
178.516 (b)(1) and (2) amended; (b)(3)(iii), (4) and (5) redesignated as (b)(4), (5) and (6) 67521
178.521 (b)(2) amended 67521
178.522 (a)(9), (b)(4) and (5) amended; (a)(10) and (b)(3)(viii) revised; (a)(11) and (b)(3)(ix) added 67521
178.601 (g)(7) amended 28494

49 CFR—Continued

59 FR Page

Chapter I—Continued
(k) redesignated as (l); (b), (g)(2)(i), (vi) and new (l) revised; new (k) added 67521
(g)(2) introductory text, (5)(i) and (ii) amended 67522
178.602 (c) amended 67522
178.603 (a) introductory text and (c) amended; (f)(1) revised 67522
178.604 (d) amended 67522
178.605 (b) amended 28494
178.606 (b) amended 28494
178.606 (c)(1) amended 67522
178.700—178.710 (Subpart N) Added 38068
178.800—178.819 (Subpart O) Added 38075
178 appendix C added 67522
179 Authority citation revised 49135
179.101–1 Authority citation removed 49315
179.102–1 Authority citation removed 49135
179.102–2 Authority citation removed 49135
179.102–4 Authority citation removed 49135
179.102–17 Authority citation removed 49135
179.105–7 (b) amended 28494
Authority citation removed 49135
179.200–7 Authority citation removed 49135
179.200–14 Authority citation removed 49135
179.200–15 Authority citation removed 49135
179.200–27 Authority citation removed 49135
179.201–1 Authority citation removed 49315
179.201–7 Authority citation removed 49135
179.203–1 Authority citation removed 49135
179.203–2 Authority citation removed 49135
179.203–3 Authority citation removed 49135
179.220–7 Authority citation removed 49135
179.220–15 Authority citation removed 49135

49 CFR—Continued

59 FR Page

Chapter I—Continued
179.400—179.500–18 (Subpart F) Authority citation removed 49135
179.500–7 Authority citation removed 49135
180 Authority citation revised 49135
180.350—180.352 (Subpart D) Added 38079
180.403 Amended 55177
180.405 (b) and (c)(1) table amended 1786
Regulation at 59 FR 1786 effective date confirmed 12861
(f)(6) amended 49135
(f)(1)(iii) and (4) introductory text amended; (h) revised 55177
180.407 (d)(4) amended 49135
(c) table, (i)(4)(viii) and (ix) amended; (e)(1) and (h)(2) revised; (i)(5), (6) and (7) redesignated as (i)(6), (7) and (8); (i)(4)(x) and new (5) added 55177
(d)(1)(ii), (e)(2)(ii) and (g)(1)(iv) amended; (e)(4) removed; (e)(5) redesignated as (e)(4) 55178
180.413 (d)(1)(i), (ii) and (iii) amended 1786
Regulation at 59 FR 1786 effective date confirmed 12861
Revised 55178
180.415 (b) amended 49135
180.417 (a)(3) heading amended 1786
Regulation at 59 FR 1786 effective date confirmed 12861

1995

49 CFR

60 FR Page

Chapter I
107.101—107.123 (Subpart B) appendix A amended 49108
107.201 (c) amended 49108
107.311 (c) amended 49108
107.335 Amended 49108
107.299—107.339 (Subpart D) appendix A Added 12141
107.601 (c) revised; eff. 7–1–96 27233
107.606 Revised; eff. 7–1–96 27233
171.7 (a)(3) table amended 40032
(a)(3) table amended; eff. 7–1–96 49072
(a)(3) table amended; eff. 4–1–96 50301

49 CFR—Continued

60 FR Page

Chapter I—Continued

171.8 Amended; eff. 2–2–96 39609
Amended 48786, 49108
Amended; eff. 4–1–96 50302
171.10 (c)(2) table amended 49108
(c)(2) table amended; eff. 4–1–96 50302
171.11 (d)(6)(iii) revised; (d)(6)(iv) amended; eff. 4–1–96 50302
171.12 (b)(5) amended 49108
(d) heading, introductory text and (4) revised; (d)(5) amended; (d)(6) added; eff. 4–1–96 50302
171.14 (b) introductory text amended 26799
(a)(2)(ii), (b) introductory text, (1) and (2) amended 26800
Amended 48786
171.15 (a)(3) and (b) introductory text amended 48786
(b) introductory text amended 49108
172.101 Table amended 26800, 26804, 40032, 48786, 49109
Table and appendix B amended 26805
appendix A amended; eff. 2–2–96 39609
Table corrected 39991
Table amended; eff. 7–1–96 49072
(i)(4) and table amended 49108
Table and appendix A amended 49110
Table amended; eff. 4–1–96 ..... 50303, 50304
172.102 (c)(1) amended 26805, 49110
(c)(2) amended 48787
(c)(3) amended; eff. 7–1–96 49072
172.203 (d)(1), (4) and (7) revised; (d)(10) and (11) added; eff. 4–1–96 50304
172.204 (a)(2) revised 26805
172.308 (b) removed; (c) and (d) redesignated as (b) and (c); new (c) amended 49110
172.310 Revised; eff. 4–1–96 50304
172.322 (d)(2)(i) amended 49110
172.400a (a)(1) introductory text amended 49110
172.402 (a)(2) table amended 26805
172.403 Heading, (b), (c), (d), (g)(1) and (2) revised; eff. 4–1–96 50305
172.407 (g) added; eff. 4–1–96 50305
172.504 (e) Table 1 amended; eff. 4–1–96 50305
172.507 (a) revised; eff. 4–1–96 50305

49 CFR—Continued

60 FR Page

Chapter I—Continued

172.519 (g) added; eff. 4–1–96 50305
172.704 (a)(2)(i) amended 49110
172.801—172.807 (Subpart I) Added; eff. 4–1–96 50305
172 appendix B added; eff. 4–1–96 50306
173 Petition denied 56957
173.2a (c)(3) revised 48787
(c)(5) amended; eff. 4–1–96 50307
173.4 (a)(1)(iv) and (b) revised; eff. 4–1–96 50307
173.23 (f) added 17400
(g) added 26805
173.24 (c)(1) and (d)(2) introductory text amended 26805
173.24b (d)(2) revised 40038
173.28 (b)(4) table corrected 7627
(b)(2)(ii) amended; (b)(7) introductory text, (i) and (ii) revised; (b)(7)(iii) redesignated as (b)(7)(iv); new (b)(7)(iii) added 26805
(b)(4) table amended 26806
173.31 Revised; eff. 7–1–96 49072
173.32 (e)(3) amended 49110
173.34 (d)(3) and (7) amended 49110
173.35 (j) amended; (l) added 40038
173.62 (b) table and (c) table amended 26806
(c) table amended 49110
173.134 Revised 48787
173.150 (d)(2) amended 26806
(b)(3) amended 49110
173.159 (c)(3) amended 49110
173.164 (c)(1) and (5) amended 49110
173.185 (e)(6), (h)(1) and (j) amended 26806
173.224 (b) table amended 26806
(b) introductory text amended 49110
173.225 (b) table amended 26806
173.242 (d)(2)(i) amended 40038
(b)(1) amended 49110
173.243 (d)(2) amended 40038
(b)(1) amended 49110
173.306 (a)(3)(v) amended 26806
(e)(1)(i) revised; (e)(1)(iii), (v) and (vi) amended 40038
(d)(3)(iii) amended 49110
173.314 Heading and (c) revised; (j) through (o) added; eff. 7–1–96 49074
173.319 (e) added; eff. 7–1–96 49075
(a)(4)(iii) amended; eff. 7–1–96 49076

49 CFR—Continued

60 FR Page

Chapter I—Continued

173.323 (c)(1) revised; eff. 7–1–96 49076
173.401—173.478 (Supbart I) Revised; eff. 4–1–96 50307
173 appendix G removed 48787
174.67 (k) amended 49111
174.700 Revised; eff. 4–1–96 50331
174.705 Added; eff. 4–1–96 50332
174.715 Revised; eff. 4–1–96 50332
174.750 (a) revised; eff. 4–1–96 50332
175.45 (a)(3) amended 49111
175.700 (b) and (c) revised; eff. 4–1–96 50333
175.703 (c) introductory text and (d) revised; eff. 4–1–96 50333
175.704 Added; eff. 4–1–96 50333
175.706 Added; eff. 4–1–96 50333
176.76 (h)(1) amended 49111
176.83 (c)(2)(iv) amended 49111
176.136 (a) amended 49111
176.410 (b) amended 49111
176.700 (a) removed; (c) revised; eff. 4–1–96 50333
176.703 Added; eff. 4–1–96 50333
176.704 Revised; eff. 4–1–96 50333
176.708 Table III redesignated as Table IV; (a) revised; (b) through (f) added; eff. 4–1–96 50334
176.715 Revised; eff. 4–1–96 50334
177.827 Added; eff. 4–1–96 50334
177.842 Revised; eff. 4–1–96 50334
177.843 (a) and (b) revised; eff. 4–1–96 50335
177.861 (a) revised; notes 1 and 2 removed; eff. 4–1–96 50335
178.53–5 Amended 49111
178.58–5 Amended 49111
178.337–3 (c) revised 17401
178.338–11 (c) introductory text amended 17402
178.345–3 (c)(1)(iii)(B) and (2)(iii)(B) amended 17402
178.345–14 (b)(3) amended 17402
178.350 Revised; eff. 4–1–96 50336
Corrected 54409
178.350–1 Removed; eff. 4–1–96 50336
178.350–2 Removed; eff. 4–1–96 50336
178.350–3 Removed; eff. 4–1–96 50336
178.358–3 (a) amended 49111
178.503 (e)(3) illustration revised 26806
178.504 (b)(1) amended 49111
178.609 (i) added 48787
178.700 (c)(1) revised 40038

49 CFR—Continued

60 FR Page

Chapter I—Continued

178.705 (c)(2)(ii) amended 40038
178.710 (c)(5) amended 40038
178.801 (b) revised 40038
178.803 Revised 40039
178.819 (b)(2) amended 40039
(b)(2) corrected 49111
179.1 (c) amended; eff. 7–1–96 49076
179.2 (a)(10) redesignated as (a)(11); new (a)(10) added; eff. 7–1–96 49076
179.7 Added; eff. 7–1–96 49076
179.16 Added; eff. 7–1–96 49077
179.18 Added; eff. 7–1–96 49077
179.20 Added; eff. 7–1–96 49077
179.22 Added; eff. 7–1–96 49077
179.100–4 (a) amended; eff. 7–1–96 49077
179.100–21 Removed; eff. 7–1–96 49077
179.100–23 Removed; eff. 7–1–96 49077
179.101–1 (a) table amended; eff. 7–1–96 49077
179.103–1 (c) removed; eff. 7–1–96 49077
179.103–2 (a) revised; eff. 7–1–96 49077
179.103–5 (a)(1) amended; eff. 7–1–96 49077
179.105 Removed; eff. 7–1–96 49077
179.105–1 Removed; eff. 7–1–96 49077
179.105–4 Removed; eff. 7–1–96 49077
179.105–5 Removed; eff. 7–1–96 49077
179.105–7 Removed; eff. 7–1–96 49077
179.105–8 Removed; eff. 7–1–96 49077
179.200–4 (a) amended; eff. 7–1–96 49077
179.200–25 Removed; eff. 7–1–96 49078
179.200–27 Removed; eff. 7–1–96 49078
179.203 Removed; eff. 7–1–96 49078
179.203–1 Removed; eff. 7–1–96 49078
179.203–2 Removed; eff. 7–1–96 49078
179 Appendixes A and B added; eff. 7–1–96 49078
180.403 Amended 17402
180.407 (c) table and (h)(2) amended; (d)(1)(i) and (ii) revised 17402
180.413 (b)(6), (d)(3) introductory text,(v) and (10) revised; (d)(3)(iii) and (iv) amended; (d)(3)(v) added 17402
180.501—180.519 (Subpart F) Added; eff. 7–1–96 49079

1996

49 CFR

61 FR Page

Chapter I
Chapter I Advisory guidance 30444, 65479, 65480
106 Technical correction.....64030
106—110 (Subchapter A) Heading revised 50908
106 Authority citation revised.....50908
106.1 Amended 51336
106.3 (d) added 30180
(b) removed; (c) redesignated as (b).....50908
Revised.....51336
106.13 Revised 51336
106.17 (a) revised 30180
(b) amended 51336
106.21 Revised 51336
106.25 Amended.....51336
106.27 (c) amended.....51336
106.29 Amended.....51336
106.31 Revised 30180
(a), (c) introductory text and (d) amended 51336
106.33 Amended; (d) revised 30181
(b), (c) and (d) revised 51336
106.35 (a) through (d) amended 30181
(b) amended 51337
106.37 Amended.....30181
(a) revised.....51337
106.38 Added 30181
106.39 Added 30181
107.3 Amended 21094
107.5 (a) revised; (b) amended.....21095
107.101—107.127 (Subpart B) Revised.....21095
107.111 (d) removed.....18931
107.201 (d) revised.....21098
107.202 (a) introductory text revised; (b)(3) amended.....21098
(d) amended 51337
107.203 (a) and (d) amended 21098
107.205 Revised 21098
107.207 (a) and (b) amended 21098
107.209 (b) removed; (c), (d) and (e) redesignated as (b), (c) and (d); (a) and new (b) amended; new (c) revised 21098
107.211 (a) revised; (c) amended 21098
107.213 Added 21099
107.215 (a) amended 21099
107.217 (a), (b), (c) and (e) amended; (d) revised.....21099

49 CFR—Continued

61 FR Page

Chapter I—Continued
107.219 (a) through (d) amended 21099
107.221 Revised 21099
107.223 (a) revised; (c) amended 21099
107.227 Revised 21099
107.299 Removed 21099
107.305 (b) revised.....21099
107.307 (a) revised; (b) amended.....7183
107.309 (a) amended 7183
107.310 Added 7183
107.311 (a) revised 7184
107.315 (c) and (d) amended 21100
107.331 Introductory text and (d) revised 21100
107.502 (f) removed 51337
107.503 (b) introductory text amended; (b)(1) and (2) removed 51337
107.504 (a) and (c) amended 18931
107.601 (c) amended 51337
107.701—107.717 (Subpart H) Added 21100
107.701 (a) designation correctly added.....27948
130 Revised.....30541
171 Petition denial.....51235
171.1 (a) introductory text amended; (d) added 21101
171.2 (a) through (d) revised; (h) added.....21101
171.3 (c) removed; (d) redesignated as (c) 21102
171.4 (d) removed.....51337
171.6 (b)(2) table amended.....33254
171.7 (a)(3) table amended....25941, 26757, 27172, 28673, 28674, 51337
(a)(3) table amended; eff. 1–1–97 50622
(a)(3) table amended 65959
171.8 Amended 21102, 51337
Amended; interim.....26419
Regulation at 61 FR 26419 confirmed.....68954
171.11 (d)(1) revised 27172
171.13 Removed.....18931
171.14 (a)(2)(iii) added 7959
(a) introductory text, (1), (2)(i) and (b) removed; (a)(2)(ii) and (iii) redesignated as (b) and (c); new (a) added; eff. 1–1–97 50622
171.15 (b) introductory text revised.....18931

49 CFR—Continued

61 FR Page

Chapter I—Continued

171.16 (b) revised 18932
(c) revised; (d)(2) amended; (d)(3) redesignated as (d)(4); new (d)(3) added 27172
172 Petition denial 38642, 51236
172.101 (g) revised; table and Appendix A amended 18932
Amended 20749, 27172
Table amended 28674, 28675, 51240, 51337, 51338
(c)(10)(iii) added; (c)(12)(ii), (iii) and table amended; eff. 1–1–97 50623
Table amended; eff. 1–1–97 50624
172.102 (c)(1) amended 27172, 51240
(c)(3) amended 28675, 50254
(c)(1), (3) and (5) amended; eff. 1–1–97 50624
(c)(1) and (3) amended 51338
172.201 (b) removed 18932
(d) revised 27172
172.203 (i)(4) added 18932
(d)(1) and (2) revised 20749
(e)(2) amended; (e)(3) removed 27172
(e)(2) and (g) revised 28675
172.205 (f) revised 28675
172.302 (b) revised; eff. 1–1–97 50624
172.310 (b) amended 20749
172.324 (a) revised 27172
172.330 (a)(1) revised 28676
(a)(1)(ii) amended 50254
172.402 (d) revised 27173
172.403 (a), (c) table and (g)(2) amended 20750
172.500 (b)(4) and (5) redesignated as (b)(5) and (6); new (b)(4) added 27173
172.504 (f)(8) amended; eff. 1–1–97 50624
172.510 (a) revised; (b) and (c) removed; (d) and (e) redesignated as (b) and (c) 28676
172.514 Heading amended 50254
(a) and (b) introductory text amended 50255
172.526 Removed 28676
172.600 (d) revised 27173
172.604 (c) added 27173
172.702 (b) revised 27173
172.704 (c)(1), (2) and (d) introductory text revised 27173
172.803 (b) introductory text, (d)(1)(i) and (ii) amended; (e)(1) designation added 20750

49 CFR—Continued

61 FR Page

Chapter I—Continued

172 Appendix B amended 20750
173 Authority citation revised 68954
173.4 Heading, (a) introductory text, (9) and (10) revised; (a)(11) removed; (c) added 27173
173.7 (a) introductory text amended 51338
173.11 Removed 18932
173.13 Added 27173
173.21 (k) added; interim 26419
(f)(3) revised 27174
Regulation at 61 FR 26419 confirmed; (k) revised 68954
173.22a (c) added 21102
(c) amended 51242
173.23 (c), (d) and (e) revised 26758
173.24a (a)(3) amended; (b)(2) revised; eff. 1–1–97 50624
173.24b (a)(1) revised; (a)(3) removed 28676
(b) amended; eff. 1–1–97 50624
173.28 (b)(4) and (7)(iv)(C) revised; (c)(2) amended; eff. 1–1–97 50624
(b)(4)(ii) corrected 51495
173.29 (f) removed 28676
173.31 (b)(2)(ii) amended; (b)(3)(iii), (4)(i), (ii), (6)(ii), (d)(1)(viii), (2), (e)(2) and (f)(1) revised 33254
(a)(6)(i) removed; (a)(6)(ii) through (v) redesignated as (a)(6)(i) through (iv); new (a)(6)(i) through (iv), (b)(5), (c)(3) and (d)(1)(vii) amended 51338
173.32 (d) and (e)(2)(i) amended; (t) added; eff. 1–1–97 50625
173.32a (c) revised 27174
173.34 (h) amended 25942
(d) introductory text amended; (d)(1) through (5) and (e) revised; (d)(6) added; (d)(7) removed 26758
(e)(10), (13) and (19)(ii) amended; (e)(19) introductory text revised 51240
173.63 (b) redesignated from 173.230(b) 27175
173.115 (b)(1) amended; eff. 1–1–97 50625
173.120 (b)(3) added; eff. 1–1–97 50625
173.121 (a) amended; eff. 1–1–97 50625

49 CFR—Continued

61 FR Page

Chapter I—Continued

173.125 (a) revised; eff. 1–1–97 50625
173.127 (b)(1) removed; (b)(2) and (3) redesignated as (b)(1) and (2); heading, (b) heading and new (1) introductory text revised; eff. 1–1–97 50625
173.133 (a) introductory text amended; eff. 1–1–97 50626
173.134 (b)(3)(ii) introductory text revised; (b)(4) added; eff. 1–1–97 50626
173.151 Heading revised; (d) added; eff. 1–1–97 50626
173.155 (b)(1) amended 27174
173.156 (b) revised; eff. 1–1–97 50626
173.158 (d) revised; (f)(1) amended; eff. 1–1–97 50626
173.163 Amended 26763
173.170 Added; eff. 1–1–97 50626
173.171 Introductory text and (b) revised; (a) amended; (d) added 27174
173.183 (a) and (b) amended; eff. 1–1–97 50627
173.189 (b) amended 51338
173.220 (g)(2) revised 27175
173.224 (c)(1) and (2) amended 51338
173.225 (a) amended; eff. 1–1–97 50627
(e)(1) amended 51338
173.230 (b) redesignated as 173.63(b); removed 27175
173.240 (a) amended 28676
173.241 (a) amended 28676
173.242 (a) amended 28676
173.243 (a) amended 28676
173.244 (a) amended 28676
173.300a (c) amended 51338
173.301 Heading and (j) revised 26763
(a) amended 26764
173.302 (c)(3) and Note 1 amended; (c)(3) Note 3 added 26764
(c)(3) amended 51240
173.306 (i) introductory text revised; (i)(1) removed; (i)(2), (3) and (4) redesignated as (i)(1), (2) and (3); eff. 1–1–97 50627
(b)(3) amended 51338
173.309 (b) revised 26764, 51240
173.314 (h) removed 18933
(b)(5) and (i) removed; (b)(6) redesignated as (b)(5); new (b)(5) revised; (c) amended 28676
(c) table amended 28677, 50255

49 CFR—Continued

61 FR Page

Chapter I—Continued

(c) Note 1 and (n) heading revised 33255
(c) table amended; eff. 1–1–97 50627
173.315 (e) and (i)(3) amended 51339
173.316 (a)(8) and (c)(3)(ii) amended 25942
173.324 Removed 18932
173.403 Amended 20750
173.410 (f) amended 20750
173.411 (b)(2)(ii) amended 20750
173.417 (a)(7) table and (b)(2) revised 20750
173.422 (a) introductory text, (4), (b)(1) and (2) amended; (b)(3) added 20751
173.425 Table revised 20751
173.426 (c) amended 20752
173.427 (a)(3), (b)(2), (3)(ii), (c)(1) and (f) table amended; (b)(4) and (b)(5) added 20752
173.428 Introductory text, (a) introductory text amended 20752
173.435 Table amended 20752, 27175
173.443 (a)(2) amended 20753
173.444 Removed 18932
173.446 Removed 18932
173.451 Removed 18932
173.453 Introductory text amended 18933
173.463 Removed 18932
173.465 (a) and (e)(1) amended 20753
173.477 Removed 18932
173.478 Removed 18932
173 Appendix H amended; eff. 1–1–97 50627
174.3 Revised 28677
174.7 Removed 18933
174.8 Removed 28677
174.9 Revised 28677
174.10 Removed 28677
174.11 Removed 28677
174.12 Removed 18933
174.18 Removed 28677
174.24 Revised 28677
Amended 50255
174.25 Removed 28677
174.26 (a) removed; (b) and (c) redesignated as (a) and (b); new (b) revised 28677
174.33 Removed 18933
174.45 Removed 18933
174.47 Removed 28677
174.48 Removed 28677

49 CFR—Continued

61 FR Page

Chapter I—Continued

174.49 Removed 28677
174.50 Revised 28677
174.55 Revised 28677
174.67 (k) amended 28678
174.69 Removed 18933
174.81 (g) introductory text amended 51339
174.83 (b) introductory text amended 51339
174.85 (c) revised 28678
(c) amended 50255
(d) table amended 51339
174.100 Removed 18933
174.101 (h) and (o) introductory text amended 51339
174.107 Removed 18933
174.109 Removed 18933
174.112 (b) amended 51339
174.208 Removed 18933
174.280 Removed 18933
174.380 Removed 18933
174.410—174.480 (Subpart H) Removed 18933
174.510—174.580 (Subpart I) Removed 18933
174.615 (a) removed 18933
174.700 (b) amended 20753
174.800—174.810 (Subpart L) Removed 18933
174.840 (Subpart M) Removed 18933
175.45 Removed 18933
175.320 (a) table amended 51339
175.640 Removed 18933
176.33 Removed 18933
176.76 (f), (g)(1) and (4) removed; (g) introductory text, (2), (3), (5), (h) and (i) redesignated as (f) introductory text, (1), (2), (3), (g) and (h) 18933
176.78 (g)(4) and (5) removed 18933
176.79 Removed 18933
176.104 (i) amended 27175
176.194 (c) and (e) amended 51339
176.331 Removed 18933
176.340 (b)(1), (3), (4) and (5) amended 51339
176.419 Removed 18933
176.704 (c) amended 20753
176.800 (a) revised 18933
176.906 Removed 18933
177.800 (d) added 18933
177.801 Revised 27175
177.803 Removed 18933
177.805 Removed 18933
177.806 Removed 18933

49 CFR—Continued

61 FR Page

Chapter I—Continued

177.807 Removed 18933
177.808 Removed 189330
177.809 Removed 18933
177.811 Removed 18933
177.812 Removed 18933
177.813 Removed 18933
177.814 Removed 18933
177.815 Removed 18933
177.818 Removed 27175
177.821 (c) through (f) removed 18933
Removed 27175
177.822 Removed 27175
177.823 Heading revised; (b) and (c) added 18933
177.824 Removed 27175
177.825 Removed 18933
177.826 Removed 18933
177.834 (b) removed; (j) revised 27175
177.835 (k), (l) and (m) removed 27175
(g) introductory text revised 51339
177.836 Removed 18933
177.837 (a) revised 18933
(d) removed 27175
177.838 (d) and (e) removed 18933
(g) revised 27175
177.839 Revised 27175
177.841 (d) removed; (e)(1) revised 27175
177.844 Removed 18933
177.848 (e)(5) amended 27175
177.853 Removed 18933
177.855 Removed 18933
177.856 Removed 18933
177.857 Removed 18933
177.858 Removed 18933
177.859 Removed 18933
177.860 Removed 18933
177.861 Removed 18933
178.3 (d) added 21102
178.35—178.68 (Subpart C) Revised 25942
178.245–1 Revised; eff. 1–1–97 50627
178.245–4 (e) added; eff. 1–1–97 50628
178.245–6 (a) amended; eff. 1–1–97 50628
178.270–12 (a) amended; eff. 1–1–97 50628
178.315 Removed 27176
178.315–1 Removed 27176
178.315–2 Removed 27176
178.315–3 Removed 27176

49 CFR—Continued

61 FR Page

Chapter I—Continued

178.315–4 Removed 27176
178.315–5 Removed 27176
178.320 (a) amended 51339
178.337–1 (b), (c)(1), (2) introductory text, (i), (ii), (d), (e)(1), (2) and (f) amended 51340
178.337–2 (b)(2)(i) and (ii) amended 28678
(a)(1) through (4), (b) heading, (1) introductory text, (2) introductory text and (c) amended 51340
178.337–3 (b), (c)(1)(iii)(A), (B) introductory text, (C), (iv)(A), (B), (C), (2)(iii)(A), (B) introductory text, (C), (iv)(A), (B), (C), (e), (f), (g) introductory text and (1) amended 51340
178.337–4 (b) and (c) amended 51340
178.337–6 (b) amended 51340
178.337–8 (a)(1) amended 51340
178.337–9 (a)(2), (3), (b)(1), (6), (c) and (d)(1) amended 51340
178.337–11 (a)(1)(ii) through (v), (2)(i), (ii), (b), (c)(1) and (3) amended 51340
178.337–13 (a) through (d) amended 51340
178.337–14 (b)(2) amended 51340
178.337–15 (a) amended 51340
178.337–16 (a), (b)(1), (2) and (c) amended 51340
178.337–17 (a) amended 51340
178.337–18 (a) introductory text, (3) and (b) amended 51340
178.338–9 (c)(1) amended 51340
178.345–1 (c) amended 51340
178.345–2 (a)(1), (c)(1) and (2) amended 51341
178.345–3 (a)(1), (b) introductory text, (c)(1) introductory text, (iii)(A), (B) introductory text, (C), (iv)(A), (B), (C), (2) introductory text, (iii)(A), (B) introductory text, (C), (iv)(A), (B), (C) and (f)(2) amended 51341
178.345–4 (a) amended 51341
178.345–6 (a) and (b) amended 51341
178.345–7 (a) introductory text, (c), (d)(2) and (5) amended; (d)(2) table revised 51341

49 CFR—Continued

61 FR Page

Chapter I—Continued

178.345–8 (a)(1) introductory text, (3), (4), (b) introductory text, (2), (c)(1), (2), (d) introductory text, (1), (2) introductory text, (ii) and (e) amended 51341
178.345–9 (e) and (h) amended 51341
178.345–10 (a), (c), (e) introductory text and (1) amended 51341
178.345–11 (a), (b) introductory text and (d) amended 51341, 51342
178.345–12 Amended 51342
178.345–13 (a), (b) introductory text, (1) and (2) amended 51342
178.345–14 (a) revised; (b)(4), (5) and (d) amended 51342
178.345–15 (b)(2) and (d) amended 513420
178.346–3 Removed 18933
Redesignated from 178.346–10 18934
178.346–4 Removed 18933
Redesignated from 178.346–11 18934
178.346–5 Removed 18933
Redesignated from 178.346–13 18934
178.346–6 Removed 18933
178.346–7 Removed 18933
178.346–8 Removed 18933
178.346–9 Removed 18933
178.346–10 Redesignated as 178.346–3 18934
178.346–11 Redesignated as 178.346–4 18934
178.346–12 Removed 18933
178.346–13 Redesignated as 178.346–5 18934
178.346–14 Removed 18933
178.346–15 Removed 18933
178.347–3 Removed 18933
Redesignated from 178.347–5 18934
178.347–4 Removed 18933
Redesignated from 178.347–10 18934
178.347–5 Redesignated as 178.347–3; new 178.347–5 redesignated from 178.347–13 18934
178.347–6 Removed 18933
178.347–7 Removed 18933
178.347–8 Removed 18933
178.347–9 Removed 18933
178.347–10 Redesignated as 178.347–4 18934
178.347–11 Removed 18933
178.347–12 Removed 18933
178.347–13 Redesignated as 178.347–5 18934
178.347–14 Removed 18933
178.347–15 Removed 18933

49 CFR—Continued

61 FR Page

Chapter I—Continued

178.348–3 Removed 18933
Redesignated from 178.348–9..... 18934
178.348–4 Removed 18933
Redesignated from 178.348–10 18934
178.348–5 Removed 18933
Redesignated from 178.348–13 18934
178.348–6 Removed 18933
178.348–7 Removed 18933
178.348–8 Removed 18933
178.348–9 Redesignated as 178.348–3 18934
178.348–10 Redesignated as 178.348–4..... 18934
178.348–11 Removed..... 18933
178.348–12 Removed..... 18933
178.348–13 Redesignated as 178.348–5..... 18934
178.348–14 Removed..... 18933
178.348–15 Removed..... 18933
178.601 (c)(4)(iv) and (v) amended; (c)(4)(vi) and (g)(8) added; eff. 1–1–97..... 50628
178.705 (c)(1)(iv)(B) and (2)(ii) amended; eff. 1–1–97..... 50629
179.2 (a)(10) amended..... 33255
179.7 (a)(2), (b)(5), (9) and (d) revised; (b)(10) removed; (b)(11), (12) and (13) redesignated as (b)(10), (11) and (12); (b)(7), new (10) and (f) amended..... 33255
179.12 Revised 28678
179.12–1 Removed..... 28678
179.12–2 Removed..... 28678
179.12–3 Removed..... 28678
179.12–4 Removed..... 28678
179.12–5 Removed..... 28678
179.12–6 Removed..... 28678
179.12–7 Removed..... 28678
179.15 Added 28678
Introductory text, (b) heading, (2)(i), (c) heading and (e) introductory text amended; (f)(1) revised..... 50255
179.16 (b) revised; (c) added 33255
179.18 (a) introductory text and (b)(2) amended; (b)(1) revised..... 33256
179.22 (b), (c) and (d) amended 33256
179.100–2 Removed 18934
179.100–5 Removed 18934
179.100–7 (a) table revised; (b) table, (c)(1) table and (2)(i) amended..... 28678
(a) table amended 50255

49 CFR—Continued

61 FR Page

Chapter I—Continued

179.100–10 (c) amended..... 28679
179.100–11 Removed..... 18934
179.100–15 Removed..... 28679
179.100–20 (a) table amended 28679
179.100–22 Removed..... 18934
179.101–1 Revised 28679
179.102–1 (a)(1) amended 28680
179.102–2 (a)(1) amended 28680
179.102–4 (d) and (l) removed; (b), (c) and (e) through (k) redesignated as (a) through (i) 28680
179.103–5 (a)(3) amended; (b)(2) revised..... 28680
(a)(1) amended 51342
179.104 Removed 18934
179.104–1 Removed 18934
179.104–2 Removed 18934
179.104–3 Removed 18934
179.104–4 Removed 18934
179.200–2 Removed 18934
179.200–5 Removed 18934
179.200–7 (b) table revised; (c) table, (d) table, (e) table and (f) table amended 28680
179.200–12 Removed..... 18934
179.200–14 (a) and (b) amended 28680
179.200–16 (d) amended..... 28680
179.200–18 Removed..... 28680
179.200–20 Removed..... 18934
179.200–24 (a) table amended 28680
179.200–26 Removed..... 18934
179.201–1 Revised 28680
179.201–4 Amended 28681, 50255
179.201–5 (a) and (b) amended 28681
179.201–7 Removed 28681
179.202—179.202–22 Removed..... 18934
179.220–2 Removed 18934
179.220–5 Removed 18934
179.220–7 (b) table revised; (c) table, (d) table and (e) table amended..... 28681
179.220–12 Removed..... 18934
179.220–19 Removed..... 28681
179.220–21 Removed..... 18934
179.220–27 Removed..... 18934
179.221–1 Revised 28681
179.222 Removed 28682
179.222–1 Removed 28682
179.300–2 Removed 18934
179.300–5 Removed 18934
179.300–7 (a) table amended; (b) removed 28682
(a) table amended 50255
(a) amended 51342

49 CFR—Continued

61 FR Page

Chapter I—Continued

179.300–11 Removed 18934
179.400–2 Removed 18934
179.400–6 (a) removed 18934
179.400–26 Removed 18934
179.500–2 Removed 18934
179.500–9 Removed 18934
179.500–17 (a)(7) removed 28682
179 Appendix A amended 33256
180.403 Amended 51342
180.407 (a)(1) amended 27176
(c) table, (d)(2)(vi), (f)(3), (g)(1)(viii), (ix), (h)(1) introductory 0text, (i) and (ii) amended 51342
180.413 (e) amended 51342
180.415 (b) amended 51343
180.417 (c)(2) amended 51343
180.501 (a) amended 33256
180.509 (b) introductory text, (c)(3)(iii)(A), (B), (j) and (l) heading revised; (b)(1), (c)(3)(iii) introductory text, (g)(1)(ii) introductory text, table and (i) amended 33256
180.511 (e) amended 33256
180.515 (a) amended; (b) removed; (c) and (d) redesignated as (b) and (c) 33257
180.519 (b)(5), (6) and (c) amended 33257

1997

(Regulations published from January 1, 1997, through October 1, 1997)

49 CFR

62 FR Page

Chapter I

107 Authority citation revised 2971, 24057
107.14 Added 24057
(a)(1) corrected 34415
107.105 (a) introductory text revised 51556
107.117 (d)(5) amended 51556
107.329 (a) and (b) amended 2971
107.299—107.339 (Subpart D) Appendix A amended 2972, 2977, 51556
171 Authority citation revised 2977, 7647, 44048
Clarification and workshop date change 16107
Reconsideration petitions 31363
Effective date confirmation 44913
Advisory guidance 49171

49 CFR—Continued

62 FR Page

Chapter I—Continued

171.1 Revised 1215
(c) added 2977
(a)(1) amended 49566
171.5 Added; eff. 2–19–97 through 8–15–97; interim 7647
Added 44048
171.6 (b)(2) table revised 51557
(a) and (b) introductory text amended 51558
171.7 (a)(3) table amended 24699, 24700
(a)(3) table and (b) table amended 51558
171.8 Amended 1215, 1227, 24700, 51558
Regulation at 62 FR 1227 eff. date delayed to 10–1–98 39398
171.11 (d)(9)(iii) amended 1227
(d)(4) revised; (d)(9)(i) amended; (d)(14) added 24700
(d)(15) added 30770
Regulation at 62 FR 30770 eff. date delayed to 8–7–97 34667
Regulation at 62 FR 1227 eff. date delayed to 10–1–98 39398
171.12 (b)(8)(iii) amended 1227
(b)(8)(i) amended; (b)(13) removed; (b)(17) added 24700
(b)(18) added 30770
Regulation at 62 FR 30770 eff. date delayed to 8–7–97 34667
Regulation at 62 FR 1227 eff. date delayed to 10–1–98 39398
(d)(1) amended 51558
171.12a (b)(5)(iii) amended 1227
(b)(5)(i) amended; (b)(12) removed; (b)(16) added 24700
(b)(17) added 30770
Regulation at 62 FR 30770 eff. date delayed to 8–7–97 34667
Regulation at 62 FR 1227 eff. date delayed to 10–1–98 39398
171.14 (b) revised 1227
(d) added 24700
(c) redesignated as (c)(1); (c)(2) added 29676
Regulation at 62 FR 1227 eff. date delayed to 10–1–98 39398
Heading, introductory text and (b) revised; (e) added; eff. 10–1–98 39404
171.15 (a)(2) amended 51558
172.101 (g) table amended 1227
(c)(10)(iii) revised 14337
Table amended 14338, 24701, 24714, 24716, 30771, 34669, 51559
(c)(14), (15) and (l)(3) added; (f) and table amended 24701

49 CFR—Continued

62 FR Page

Chapter I—Continued
Table and Appendix B amended 24717
Regulation at 62 FR 30771 eff. date delayed to 8–7–97 34667
Regulation at 62 FR 1227 eff. date delayed to 10–1–98.....39398
(g) table amended; eff. 10–1–98 39404
Table corrected 45702
Table and Appendix A amended 51560
172.102 (c)(1), (3), (5) and (7)(ii) amended.....24718
(c)(1) amended 24719, 34669
(c)(1) and (2) amended 30772
Regulation at 62 FR 30772 eff. date delayed to 8–7–97 34667
172.203 (j) removed; (k)(3) and (m)(3) amended 24719
(k)(3) amended.....51560
172.204 (b)(1) introductory text amended.....51560
172.301 (a)(1) revised; (a)(3) added; (f)(1) and (2) removed 1227
Regulation at 62 FR 1227 eff. date delayed to 10–1–98.....39398
(a)(3) revised; eff. 10–1–98.....39404
172.302 (g) added 1228
Regulation at 62 FR 1228 eff. date delayed to 10–1–98.....39398
172.313 (a) revised; (c) added 1228
Regulation at 62 FR 1228 eff. date delayed to 10–1–98.....39398
Introductory text added; (b) and (c) revised; eff. 10–1–98.....39405
Corrected.....45702
172.328 (a)(3) added 1228
Regulation at 62 FR 1228 eff. date delayed to 10–1–98.....39398
(a)(3) revised; eff. 10–1–98.....39405
172.331 (c) added.....1228
Regulation at 62 FR 1228 eff. date delayed to 10–1–98.....39398
172.332 (a) revised 1228
Regulation at 62 FR 1228 eff. date delayed to 10–1–98.....39398
172.400 (b) table revised.....1228
Regulation at 62 FR 1228 eff. date delayed to 10–1–98.....39398
(b) table amended; eff. 10–1–98 39405
172.402 (e)(1) revised; eff. 10–1–98.....39405
172.416 Revised 1229
Regulation at 62 FR 1229 eff. date delayed to 10–1–98.....39398

49 CFR—Continued

62 FR Page

Chapter I—Continued
Revised; eff. 10–1–98.....39405
172.429 Added 1229
Regulation at 62 FR 1229 eff. date delayed to 10–1–98.....39398
Revised; eff. 10–1–98.....39406
172.502 (a)(2) revised; (b)(3) added 1230
Regulation at 62 FR 1230 eff. date delayed to 10–1–98.....39398
(b)(3) revised; eff. 10–1–98.....39407
172.504 (b) and (e) revised; (f)(11) added 1230
Regulation at 62 FR 1230 eff. date delayed to 10–1–98.....39398
(e) table amended; eff. 10–1–98 39407
172.505 (a) revised 1231
Regulation at 62 FR 1231 eff. date delayed to 10–1–98.....39398
172.510 (b) removed; (c) redesignated as (b); new (b) amended.....1231
Regulation at 62 FR 1231 eff. date delayed to 10–1–98.....39398
172.540 Revised 1231
Regulation at 62 FR 1231 eff. date delayed to 10–1–98.....39398
Revised; eff. 10–1–98.....39408
172.555 Added 1233
Regulation at 62 FR 1233 eff. date delayed to 10–1–98.....39398
Revised; eff. 10–1–98.....39409
172.602 (c)(1) revised 1234
Regulation at 62 FR 1234 eff. date delayed to 10–1–98.....39398
172.606 Added 1234
Regulation at 62 FR 1234 eff. date delayed to 10–1–98.....39398
(c) added; eff. 10–1–98.....39409
172.801—172.807 (Subpart I) Removed 46216
173 Meeting 37149
173.3 (c)(1) amended; (c)(3) revised; (c)(7) added.....24719
173.5 Revised.....1215
(a)(2) amended 49566
173.6 Added 1216
(a)(1) introductory text, (2), (b)(4) and (d) revised; (a)(1)(iii) amended; (e) added 49566
(c)(3) amended 51560
173.8 Added 1216
(d)(3) amended 49567
173.9 Revised.....1234
Regulation at 62 FR 1234 eff. date delayed to 10–1–98.....39398

49 CFR—Continued

62 FR Page

Chapter I—Continued
(e) amended 51560
173.21 (f) introductory text amended.....24719
173.28 (b)(4)(i) table amended 14338
173.29 (b)(1) revised.....1236
Regulation at 62 FR 1236 eff. date delayed to 10–1–98.....39398
173.32 (e)(2)(i) amended 51560
173.32c (j) amended 24719
173.34 (e)(18)(i) table amended 24719
173.56 (b)(1) and (f) amended 51560
173.60 Revised 24719
173.62 Revised 24720
Table corrected 45702
(b) table amended 51560
173.120 (a)(3) revised; (b)(3), (c)(1)(i)(A) and (B) amended; (c)(1)(i)(C) added 24731
173.124 (a)(1) introductory text, (2)(i)(D)(2), (3)(ii), (iii), (b)(1), (2) and (c) amended.....24731
173.125 (b), (c)(2)(i), (ii), (d)(1), (2) and (3) revised 24731
(a) amended 51560
173.166 (b)(1) and (3)(i) amended 51560
173.127 Revised 24732
173.128 (c)(3) and (e) amended.....24732
173.132 (c) redesignated as (d); (b)(3)(iii) and new (c) added.....24732
(c)(3) corrected 45702
173.136 (c) added 24732
173.137 (b) and (c)(2) amended 24733
173.152 (b)(4) added 24733
173.162 Amended 24733
173.166 Heading and (e) revised; (a) amended; (b) introductory text, (2), (4), (c), (d)(1), (2) and (f) amended.....24733
(b)(1) and (3)(i) amended 51560
173.170 (c) amended 14338
173.185 Revised 24733
173.201 (b) and (c) amended 24734
173.202 (b) and (c) amended 24734
(b) amended 51560
173.203 (b) and (c) amended 24734
173.211 (b) and (c) amended 24734
173.212 (b) and (c) amended 24734
173.213 (b) and (c) amended 24734
173.220 (c)(1) revised 24734
173.221 Amended 51560
173.224 (b) table revised 24734

49 CFR—Continued

62 FR Page

Chapter I—Continued
(c)(3) removed; (c)(4) redesignated as (c)(3); (c)(1) and (3)(ii) amended 24735
(b) table corrected 45702
173.225 (b)(2) amended; (b)(4)(ii), (6), table, (d) and (e)(5) revised.....24735
(c)(2), (3) and (e)(2)(i)(B) removed; (c)(4), (5) and (e)(3)(i)(C) redesignated as (c)(2), (3) and (e)(3)(i)(B); (c)(1), new (2)(ii) and (e)(2) amended 24741
(e)(4) amended 51560
173.226 (c)(1) amended 24741
173.242 (b)(1) amended 51560
173.243 (b)(1) amended 51560
173.247 (g)(1)(iii)(C) amended.....51560
173.315 (a) table amended 24741
173.316 (d) added 24741
173.318 (f)(4) added.....24741
173.320 (a)(3) revised.....51561
173.422 (b)(2) amended 51561
173 Appendixes E and F removed 24741
174.26 Revised 1236
Regulation at 62 FR 1236 eff. date delayed to 10–1–98.....39398
174.680 (a) revised 1236
Regulation at 62 FR 1236 eff. date delayed to 10–1–98.....39398
174.705 Removed 46216
175.10 (a)(22) amended 24741
175.630 Revised 1236
Regulation at 62 FR 1236 eff. date delayed to 10–1–98.....39398
175.700 (b) amended 51561
175.706 Removed 46216
176.78 (k) revised 24741
176.84 (b) table amended 24742
176.340 (c) amended 51561
176.600 (a) revised 1236
Regulation at 62 FR 1236 eff. date delayed to 10–1–98.....39398
176.703 Removed 46216
176.905 Revised 24742
177.810 Amended 51561
177.827 Removed 46216
177.840 (e) amended 51561
177.841 (e)(1) and (2) revised 1236
Regulation at 62 FR 1236 eff. date delayed to 10–1–98.....39398
178.2 (f) added.....14338
178.36 (a)(2)(iii) amended.....51561
178.44 (b) Table 1 amended 51561

49 CFR—Continued

62 FR Page

Chapter I—Continued

178.50 (i) introductory text amended 51561
178.68 (f)(1)(ii) revised 51561
178.270–14 (b)(13) revised 51561
178.338–19 (b) amended 51561
178.503 (a)(1) amended 51561
178.511 Heading, (a), (b) introductory text and (1) revised; (b)(2) through (6) redesignated as (b)(3) through (7); new (b)(2) added 24742
178.703 (b)(6) added 24743
178.707 (c)(2) and (3) amended; (c)(6) added 24743
178.815 (c)(3) amended 24743
179.15 (b) heading and (f)(1) revised; (e) introductory text amended 51561
179.100–19 (a) amended 51561

49 CFR—Continued

62 FR Page

Chapter I—Continued

179.100–23 (a) amended 51561
179.100–24 Amended 51561
179.221–1 Table amended 51561
180 Authority citation revised 51561
180.409 (a) revised; (b) redesignated as (d); new (b) and (c) added 1217
180.509 (j) redesignated as (j)(1); (j)(2) added 51561

1998

(Correction published from January 12, 1998)

49 CFR

63 FR Page

Chapter I

173.62 (c)(5) table corrected 0